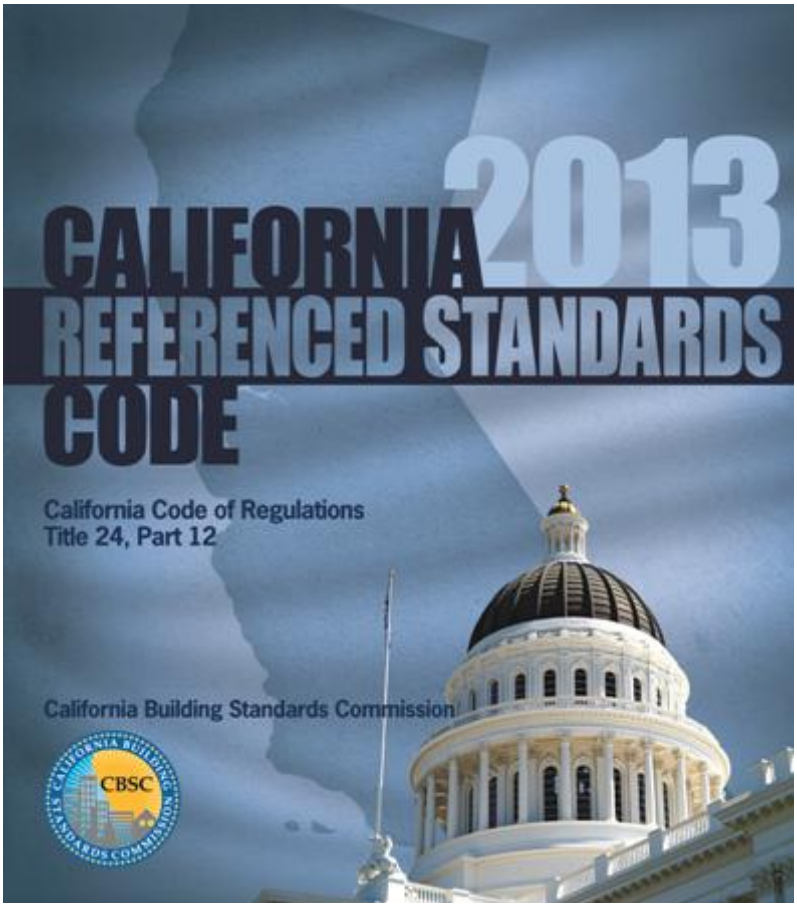
2013
CALIFORNIA
REFERENCED STANDARDS
CODE
California Code of Regulations
Title 24, Part 12
California Building Standards Commission
CBSC

2013 California Referenced Standards Code
California Code of Regulations, Title 24, Part 12

First Printing: July 2013

ISBN 978-1-60983-461-6

Published by

International Code Council
500 New Jersey Avenue, NW, 6th Floor
Washington, D.C. 20001
1-888-422-7233

COPYRIGHT © 2013

held by

California Building Standards Commission
2525 Natomas Park Drive, Suite 130
Sacramento, California 95833-2936

PRINTED IN THE U.S.A.

PREFACE

This document is Part 12 of 12 parts of the official triennial compilation and publication of the adoptions, amendments and repeal of administrative regulations to the *California Code of Regulations, Title 24,* also referred to as the *California Building Standards Code*. This part is known as the *California Referenced Standards Code*.

The *California Building Standards Code* is published in its entirety every three years by order of the California legislature, with supplements published in intervening years. The California legislature delegated authority to various state agencies, boards, commissions and departments to create building regulations to implement the State's statutes. These building regulations, or standards, have the same force of law, and take effect 180 days after their publication unless otherwise stipulated. The *California Building Standards Code* applies to occupancies in the State of California as annotated.

A city, county, or city and county may establish more restrictive building standards reasonably necessary because of local climatic, geological or topographical conditions. Findings of the local condition(s) and the adopted local building standard(s) must be filed with the California Building Standards Commission to become effective and may not be effective sooner than the effective date of this edition of the *California Building Standards Code*. Local building standards that were adopted and applicable to previous editions of the *California Building Standards Code* do not apply to this edition without appropriate adoption and the required filing.

Should you find publication (e.g., typographical) errors or inconsistencies in this code or wish to offer comments toward improving its format, please address your comments to:

California Building Standards Commission
2525 Natomas Park Drive, Suite 130
Sacramento, CA 95833–2936

Phone: (916) 263–0916
Fax: (916) 263–0959

Web Page: www.bsc.ca.gov

ACKNOWLEDGEMENTS

The 2013 *California Building Standards Code* (Code) was developed through the outstanding collaborative efforts of the Department of Housing and Community Development, the Division of State Architect, the Office of the State Fire Marshal, the Office of Statewide Health Planning and Development, the California Energy Commission, the California Department of Public Health, the California State Lands Commission, the Board of State and Community Corrections, and the California Building Standards Commission (Commission).

This collaborative effort included the assistance of the Commission's Code Advisory Committees and many other volunteers who worked tirelessly to assist the Commission in the production of this Code.

Governor Edmund G. Brown Jr.

Members of the California Building Standards Commission

Secretary Anna Caballaro – Chair
James Barthman – Vice-Chair

Stephen Jensen
Randy Twist
Richard Sawhill
Kent Sasaki
Rose Conroy
Sheila Lee
Richard Sierra
Steven Winkel

Erick Mikiten

Jim McGowan – Executive Director
Michael L. Nearman – Deputy Executive Director

For questions on California state agency amendments, please refer to the contact list on page v.

CALIFORNIA CODE OF REGULATIONS, TITLE 24

California Agency Information Contact List

Board of State and Community Corrections
www.bscc.ca.gov *(916) 445-5073*
Local Adult Jail Standards
Local Juvenile Facility Standards

California Building Standards Commission
www.bsc.ca.gov *(916) 263-0916*

California Energy Commission
www.enregy.ca.gov *Energy Hotline (800) 772-3300*
Building Efficiency Standards
Appliance Efficiency Standards
Compliance Manual/Forms

California State Lands Commission
www.slc.ca.gov *(562) 499-6312*
Marine Oil Terminals

California State Library
www.library.ca.gov *(916) 654-0266*

Department of Consumer Affairs:

Acupuncture Board
www.acupuncture.ca.gov *(916) 515-5200*
Office Standards

Board of Pharmacy
www.pharmacy.ca.gov *(916) 574-7900*
Pharmacy Standards

Bureau of Barbering and Cosmetology
www.barbercosmo.ca.gov *(916) 952-5210*
Barber and Beauty Shop,
and College Standards

Bureau of Electronic and Appliance Repair,
Home Furnishings and Thermal Insulation
www.bearhfti.ca.gov *(916) 999-2041*
Insulation Testing Standards

Structural Pest Control Board
www.pestboard.ca.gov *(800) 737-8188*
Structural Standards

Veterinary Medical Board
www.vmb.ca.gov *(916) 263-2610*
Veterinary Hospital Standards

Department of Food and Agriculture
www.cdfa.ca.gov
Meat & Poultry Packing Plant Standards (916) 654-0509

Dairy Standards (916) 654-0773

Department of Housing and Community Development

www.hcd.ca.gov

(916) 445-9471
Residential- Hotels, Motels, Apartments, Single-Family Dwellings; and Permanent Structures in Mobilehome & Special Occupancy Parks

(916) 445-3338
Factory-Built Housing, Manufactured Housing & Commercial Modular

Mobilehome- Permits & Inspections
Northern Region–(916) 255-2501
Southern Region–(916) 782-4420

(916) 445-9471
Employee Housing Standards

Department of Public Health

www.dph.ca.gov

(916) 449-5661
Organized Camps Standards
Public Swimming Pools Standards

Division of the State Architect

www.dgs.ca.gov/dsa

(916) 445-8100

Access Compliance
Structural Safety

Public Schools Standards
Essential Services Building Standards
Community College Standards

State Historical Building Safety Board

Alternative Building Standards

Office of Statewide Health Planning and Development

www.oshpd.ca.gov

(916) 440-8356
Hospital Standards
Skilled Nursing Facility Standards & Clinic Standards
Permits

Office of the State Fire Marshal

osfm.fire.ca.gov

(916) 445-8200
Code Development and Analysis
Fire Safety Standards

HOW TO DETERMINE WHERE CHANGES HAVE BEEN MADE

Symbols in the margins indicate where changes have been made or language has been deleted.

|| This symbol indicates that a change has been made.

> This symbol indicates California deletion of model code or California language.

PREFACE 3
ACKNOWLEDGEMENTS 4
CALIFORNIA CODE OF REGULATIONS, TITLE 24 5
HOW TO DETERMINE WHERE CHANGES HAVE BEEN MADE 7
CHAPTER 12-1 ADMINISTRATION 26
SECTION 12-1-101 TITLE, PURPOSE AND SCOPE 26
12-1-101.11 Application. 26
12-1-101.11.12 DSA/SS — Division of the State Architect, Structural Safety. 26
SECTION 12-1-106 PERMITS 26
12-1-106.3.3.1 [For DSA/SS] Public schools. 26
CHAPTER 12-3 RELEASING SYSTEMS FOR SECURITY BARS IN DWELLINGS 28
INTRODUCTION 28
SECTION 12-3-1 SCOPE 28
12-3-1.1 28
12-3-1.2 28
12-3-1.3 28
12-3-1.4 28
12-3-1.5 28
12-3-1.6 28
12-3-1.7 28
12-3-1.8 29
12-3-1.9 29
12-3-1.10 29
SECTION 12-3-2 GENERAL 29
12-3-2.1 Components. 29
12-3-2.1.1 29
12-3-2.1.2 29
12-3-2.1.3 29
12-3-2.1.4 29
12-3-2.2 Units of measurement. 29
12-3-2.2.1 29

12-3-2.3 Installation instructions. 29
12-3-2.3.1 30
12-3-2.4 Definitions. 30
12-3-2.4.1 Dwelling unit. 30
12-3-2.4.2 Escape. 30
12-3-2.4.3 Emergency means of escape. 30
12-3-2.4.4 Means of escape. 30
12-3-2.4.5 Primary means of escape. 30
12-3-2.4.6 Security bars. 30
CONSTRUCTION 30
SECTION 12-3-3 ASSEMBLY 30
12-3-3.1 30
12-3-3.2 31
12-3-3.3 31
12-3-3.4 31
12-3-3.5 31
12-3-3.6 31
12-3-3.7 31
12-3-3.8 31
12-3-3.9 31
12-3-3.10 31
12-3-3.11 31
12-3-3.12 31
SECTION 12-3-4 MATERIALS 32
12-3-4.1 32
12-3-4.2 32
12-3-4.3 32
12-3-4.4 32
12-3-4.5 Manual actuators. 32
12-3-4.5.1 32
12-3-4.5.2 32
12-3-4.5.3 32

12-3-4.5.4 33
12-3-4.6 Cables and connectors. 33
12-3-4.6.1 33
12-3-4.6.2 33
12-3-4.6.3 33
12-3-4.7 Hinges. 33
12-3-4.7.1 33
PERFORMANCE 33
SECTION 12-3-5 TEST SETUP AND SAMPLE PREPARATION 33
12-3-5.1 Sample selection. 33
12-3-5.1.1 33
12-3-5.1.2 33
12-3-5.1.3 34
12-3-5.2 Test fixture. 34
12-3-5.2.1 34
12-3-5.2.2 34
12-3-5.2.3 34
12-3-5.2.4 34
12-3-5.2.5 34
12-3-5.3 Sample assembly. 34
12-3-5.3.1 34
12-3-5.3.2 35
12-3-5.3.3 35
12-3-5.3.4 35
SECTION 12-3-6 SECURE ATTACHMENT TEST 35
12-3-6.1 35
12-3-6.2 35
SECTION 12-3-7 OPERATION TEST 35
12-3-7.1 35
12-3-7.2 36
12-3-7.3 36
12-3-7.4 36

SECTION 12-3-8 MANUAL ACTUATION TEST 36
12-3-8.1 36
12-3-8.2 36
12-3-8.2.1 36
12-3-8.2.2 36
12-3-8.2.3 36
12-3-8.3 36
12-3-8.4 37
SECTION 12-3-9 ENDURANCE TEST 37
12-3-9.1 37
12-3-9.2 37
SECTION 12-3-10 ENVIRONMENTAL EXPOSURE TEST 37
12-3-10.1 37
12-3-10.2 Elevated ambient. 37
12-3-10.3 Low ambient. 37
12-3-10.4 Humidity test. 37
SECTION 12-3-11 ABUSE TEST 37
12-3-11.1 38
12-3-11.2 38
MARKINGS AND INSTRUCTIONS 38
SECTION 12-3-12 MARKINGS 38
12-3-12.1 38
12-3-12.2 38
12-3-12.3 38
12-3-12.4 38
SECTION 12-3-13 INSTRUCTION MANUAL 38
12-3-13.1 38
12-3-13.2 38
12-3-13.3 39
CHAPTER 12-4A LABORATORY ANIMAL QUARTER STANDARDS 40
STANDARD 12-4A-1 40
Sec. 12-4A-101. 40

CHAPTER 12-4-1 STAGE AND PLATFORMS 41
SMOKE OR HEAT VENTILATORS STANDARD 12-4-1 41
SMOKE OR HEAT VENTILATORS 41
Sec. 12-4-100 41
CHAPTER 12-7-1 FIRE-RESISTIVE STANDARDS 44
FIRE TESTS OF BUILDING CONSTRUCTION AND MATERIALS STANDARD 12-7-1 44
SCOPE 44
Sec. 12-7-100 44
FIRE TESTING FURNACES AND CONTROL 44
Sec. 12-7-101 44
UNEXPOSED SURFACE TEMPERATURES 44
Sec. 12-7-102 44
CLASSIFICATION AS DETERMINED BY TEST 45
Sec. 12-7-103 45
TEST SPECIMEN 46
Sec. 12-7-104 46
DURATION AND CONDUCT OF TESTS 46
Sec. 12-7-105 46
TESTS OF BEARING WALLS AND PARTITIONS 48
Sec. 12-7-106 48
TESTS OF NONBEARING WALLS AND PARTITIONS 48
Sec. 12-7-107 48
TEST OF COLUMNS 49
Sec. 12-7-108 49
ALTERNATE TEST OF PROTECTION FOR STRUCTURAL STEEL COLUMNS 49
Sec. 12-7-109 50
TESTS OF FLOORS AND ROOFS 50
Sec. 12-7-110 50
TESTS OF LOADED RESTRAINED STRUCTURAL FRAME MEMBERS 53
Sec. 12-7-111 53
Sec. 12-7-112 54
TESTS OF CEILING CONSTRUCTIONS 55

Sec. 12-7-113 55
TESTS OF PROTECTION FOR COMBUSTIBLE FRAMING, OR FOR COMBUSTIBLE FACINGS ON THE UNEXPOSED SIDE OF WALLS, PARTITIONS AND FLOORS 56
Sec. 12-7-114 56
STANDARD FIRE ENDURANCE TEST REPORT FORM 57
Sec. 12-7-115 57
TABLE SFM 12-7-1A CONDITIONS FOR HOSE STREAM TEST 60
CHAPTER 12-7-2 FIRE-RESISTIVE STANDARDS 60
CHAPTER 12-7-3 FIRE-RESISTIVE STANDARDS 61
FIRE TESTING FURNACES STANDARD 12-7-3 61
SCOPE 61
Sec. 12-7-300 61
Sec. 12-7-301 61
BURNERS AND FUEL 62
Sec. 12-7-302 62
TIME-TEMPERATURE CURVE 62
Sec. 12-7-303 62
FURNACE CONTROL 63
Sec. 12-7-304 63
CORRELATION 64
Sec. 12-7-305 65
TABLE 12-7-3A STANDARD TIME-TEMPERATURE CURVE FOR CONTROL OF FIRE TESTS 66
TABLE 12-7-3A—continued STANDARD TIME-TEMPERATURE CURVE FOR CONTROL OF FIRE TESTS67
FIGURE 12-7-3-1—TIME-TEMPERATURE CURVE 68
CHAPTER 12-7-4 FIRE-RESISTIVE STANDARDS 69
FIRE DOOR ASSEMBLY TESTS STANDARD 12-7-4 69
SCOPE 69
Sec. 12-7-400 69
FIRE TESTING FURNACES AND CONTROL 69
Sec. 12-7-401 69
UNEXPOSED SURFACE TEMPERATURES 69
Sec. 12-7-402 69

TEST ASSEMBLIES 70
Sec. 12-7-403 70
CONDUCT OF TESTS 72
Sec. 12-7-404 72
REPORT 72
Sec. 12-7-405 72
CONDITIONS OF ACCEPTANCE 73
Sec. 12-7-406 73
MARKING 75
Sec. 12-7-407 75
TABLE 12-7-4A HOSE STREAM TEST 76
CHAPTER 12-7-5 FIRE-RESISTIVE STANDARDS 76
Interior Finish of Decorative Material STANDARD 12-7-5 76
SCOPE 76
Sec. 12-7-500 77
TEST SETUP AND PERFORMANCE 77
Section 12-7-501 77
Section 12-7-502 77
CHAPTER 12-7A MATERIALS AND CONSTRUCTION METHODS FOR EXTERIOR WILDFIRE EXPOSURE 79
EXTERIOR WALL SIDING AND SHEATHING SFM STANDARD 12-7A-1 79
12-7A-1.1 Application. 79
12-7A-1.2 Scope. 79
12-7A-1.3 Referenced documents. 79
12-7A-1.4 Definitions. 79
12-7A-1.5 Summary of test method. 79
12-7A-1.6 Equipment. 80
12-7A-1.7 Test assembly. 81
12-7A-1.8 Weathering. 82
12-7A-1.9 Conduct of tests. 82
12-7A-1.10 Report. 83
12-7A-1.11 Conditions of Acceptance. 84
FIGURE 1. TEST FIGURE SCHEMATIC 85

FIGURE 2. GAS BURNER IGNITION SOURCE 85
EXTERIOR WINDOWS SFM STANDARD 12-7A-2 86
12-7A-2.1 Application. 86
12-7A-2.2 Scope. 86
12-7A-2.3 Referenced documents. 86
12-7A-2.4 Definitions. 86
12-7A-2.5 Test apparatus. 86
12-7A-2.6 Test assembly. 87
12-7A-2.7 Conduct of tests. 87
12-7A-2.8 Conditions of Acceptance. 88
FIGURE 1. SCHEMATIC OF THE WALL ASSEMBLY 88
HORIZONTAL PROJECTCION UNDERSIDE SFM STANDARD 12-7A-3 88
12-7A-3.1 Application. 88
12-7A-3.2 Scope. 89
12-7A-3.3 Referenced documents. 89
12-7A-3.4 Definitions. 89
12-7A-3.5 Equipment. 89
12-7A-3.6 Materials. 89
12-7A-3.7 Test system preparation (Figure 1). 90
12-7A-3.8 Conduct of Tests. 90
12-7A-3.9 Report. 91
12-7A-3.10 Conditions of Acceptance. 91
FIGURE 1. EAVES TEST ASSEMBLY 91
DECKING SFM STANDARD 12-7A-4 92
12-7A-4.1 Application. 92
12-7A-4.2 Scope. 92
12-7A-4.3 Referenced document. 92
12-7A-4.4 Definitions. 92
12-7A-4.5 Test assembly. 92
12-7A-4.6 Materials. 93
12-7A-4.7 PART A. Under-deck flame test. 93
12-7A-4.7.1 Equipment. 93

12-7A-4.7.2 Test system preparation. 93
12-7A-4.7.3 Conduct of tests. 94
12-7A-4.7.4 Report. 94
12-7A-4.7.5 Conditions of Acceptance. 95
12-7A-4.8 PART B. Burning brand exposure. 95
12-7A-4.8.1 Equipment. 95
12-7A-4.8.2 Test system preparation. 95
12-7A-4.8.3 Conduct of tests. 96
12-7A-4.8.4 Report. 97
12-7A-4.8.5 Conditions of Acceptance. 97
FIGURE 1. DECK TEST ASSEMBLY (UNDER DECK-FLAME) 97
FIGURE 2. DECK TEST ASSEMBLY (BURNING-BRAND) 98
DECKING ALTERNATE METHOD A SFM STANDARD 12-7A-4A 98
12-7A-4A.1 Application. 98
12-7A-4A.2 Scope. 98
12-7A-4A.3 Referenced document. 98
12-7A-4A.4 Definitions. 98
12-7A-4A.5 Test assembly. 98
12-7A-4A.6 Materials. 99
12-7A-4A.7 Under-deck flame test. 99
12-7A-4A.7.1 Equipment. 99
12-7A-4A.7.2 Test system preparation. 99
12-7A-4A.7.3 Conduct of tests. 100
12-7A-4A.7.4 Report. 101
12-7A-4A.7.5 Conditions of acceptance. 101
IGNITION-RESISTANT MATERIAL SFM STANDARD 12-7A-5 101
12-7A-5.1 Application. 101
12-7A-5.2 Scope. 101
12-7A-5.3 Referenced documents. 101
12-7A-5.4 Definitions. 101
12-7A-5.5 Equipment. 101
12-7A-5.6 Materials. 101

12-7A-5.7 Test specimen preparation. 102
12-7A-5.8 Weathering. 102
12-7A-5.9 Conduct of tests. 102
12-7A-5.10 Report. 102
12-7A-5.11 Conditions of Acceptance: 102
CHAPTER 12-8-1 FIRE-RESISTIVE STANDARDS FOR FIRE PROTECTION 103
STANDARD 12-8-100 ROOM FIRE TEST FOR WALL AND CEILING MATERIALS 103
SCOPE 103
Sec. 12-8-101 103
FIRE AND SMOKE MEASUREMENTS AND PHOTOGRAPHIC RECORD 104
Sec. 12-8-102 104
REPORT 105
Sec. 12-8-103 105
TEST SAMPLES 106
Sec. 12-8-104 106
SUMMARY OF METHOD AND HEAT SOURCE 107
Sec. 12-8-105 107
IGNITION SOURCE AND LOCATION 107
Sec. 12-8-106 107
COMPARTMENT DIMENSIONS AND CONSTRUCTION 108
Sec. 12-8-107 108
SPECIMEN MOUNTING AND TEST MATERIAL SIZE 108
Sec. 12-8-108 108
FIRE COMPARTMENT ENVIRONMENT 108
Sec. 12-8-109 109
AMBIENT CONDITIONS IN TEST BUILDING AND FIRE COMPARTMENT 109
Sec. 12-8-110 109
SPECIMEN CONDITIONING 109
Sec. 12-8-111 109
INSTRUMENTATION 109
Sec. 12-8-112 109
CALIBRATION AND DOCUMENTATION OF IGNITION SOURCE AND TEST EQUIPMENT 113

Sec. 12-8-113 113
TEST PROCEDURE 113
Sec. 12-8-114 113
FLASHOVER AND SMOKE 114
Sec. 12-8-115 114
MARKINGS 114
Sec. 12-8-116 114
TABLE 12-8-1A IGNITION SOURCE RATE OF HEAT RELEASE PROGRAM FOR TESTS OF SAFETY CELL PADDING MATERIALS 114
FIGURE 12-8-1—TIME—MINUTES 115
FIGURE 12-8-2—LOCATION OF HEAT FLUX METERS 116
FIGURE 12-8-3—ROOM THERMOCOUPLE LOCATIONS 116
FIGURE 12-8-4—SECTION VIEW OF ROOM TEST APPARATUS 117
FIGURE 12-8-5—PLAN VIEW OF CANOPY HOOD 118
FIGURE 12-8-6—BIDIRECTIONAL PROBE 119
FIGURE 12-8-7—GAS BURNER 119
FIGURE 12-8-8—BURNER GAS FLOW CONTROL AND MEASUREMENT 120
APPENDIX 12-8-1A CALCULATION OF THE TOTAL RATE OF HEAT AND CARBON MONOXIDE OR CARBON DIOXIDE PRODUCTION 121
APPENDIX 12-8-1B GUIDE TO MOUNTING TECHNIQUES FOR WALL AND CEILING INTERIOR FINISH MATERIAL 127
GENERAL 127
Sec. 12-8-1B.1. 127
FIGURE 12-8-1B-1—TYPICAL STEEL FRAME SUPPORT SYSTEM 128
ACOUSTICAL MATERIALS AND OTHER BOARD MATERIALS 128
Sec. 12-8-1B.2. 128
FIGURE 12-8-1B-2—MATERIAL FASTENING TECHNIQUE 129
BATT OR BLANKET-TYPE INSULATING AND OTHER FLEXIBLE MATERIALS 129
Sec. 12-8-1B.3. 129
FIGURE 12-8-1B-3—TYPICAL MOUNTING TECHNIQUE FOR RIGID WALL MATERIALS 130
BUILDING UNITS 130
Sec. 12-8-1B.4. 130

FIGURE 12-8-1B-4—TYPICAL MOUNTING TECHNIQUE FOR FLEXIBLE WALL MATERIALS 131
COATINGS OR SPRAY APPLIED MATERIALS 131
Sec. 12-8-1B.5. 131
FIGURE 12-8-1B-5—TYPICAL MOUNTING TECHNIQUE FOR CEILING MATERIALS 132
WALL COVERING MATERIAL 133
Sec. 12-8-1B.6. 133
CHAPTER 12-10-1 EXITS 133
POWER-OPERATED EXIT DOORS STANDARD 12-10-1 133
SCOPE 133
Sec. 12-10-100. 133
GENERAL 133
Sec. 12-10-101. 133
SWINGING DOORS 135
Sec. 12-10-102. 135
SLIDING DOORS 136
Sec. 12-10-103. 136
MARKING 137
Sec. 12-10-104. 137
CHAPTER 12-10-2 EXITS 138
SINGLE-POINT LATCHING OR LOCKING DEVICES STANDARD 12-10-2 138
SCOPE 138
Sec. 12-10-200. 138
INSTRUCTIONS 138
Sec. 12-10-201. 138
DESIGN 139
Sec. 12-10-202. 139
CONSTRUCTION MATERIALS 140
Sec. 12-10-203. 140
ENDURANCE AND PERFORMANCE TEST PROCEDURES 140
Sec. 12-10-204. 140
THICKNESS OF COATINGS TESTS 143
Sec. 12-10-205. 143

MARKING 143
Sec. 12-10-206. 143
FIGURE 12-10-2-1—STATIC LOADING FIXTURE 144
FIGURE 12-10-2-2—ENDURANCE LIFE TESTING APPARATUS 145
CHAPTER 12-10-3 EXITS 146
EMERGENCY EXIT AND PANIC HARDWARE STANDARD 12-10-3 146
SCOPE 146
Sec. 12-10-300. 146
INSTRUCTIONS 146
Sec. 12-10-301. 146
DESIGN 146
Sec. 12-10-302. 146
CONSTRUCTION MATERIALS 147
Sec. 12-10-303. 147
ENDURANCE AND PERFORMANCE TESTS 147
Sec. 12-10-304. 147
EMERGENCY OPERATION TEST 148
Sec. 12-10-305. 148
MARKING 149
Sec. 12-10-306. 149
CHAPTERS 12-11A AND 12-11B BUILDING AND FACILITY ACCESS SPECIFICATIONS 150
PRODUCT APPROVAL FOR DETECTABLE WARNING PRODUCTS AND DIRECTIONAL SURFACES 150
SCOPE 150
Sections 12-11A.202 and 12-11B.202. 150
DETECTABLE WARNING PRODUCTS 150
Sections 12-11A.203 and 12-11B.203. 150
DIRECTIONAL SURFACES 150
Sections 12-11A.204 and 12-11B.204. 150
INDEPENDENT ENTITY 150
Sections 12-11A.205 and 12-11B.205. 150
TWO-YEAR APPROVAL 150
Sections 12-11A.206 and 12-11B.206. 150

FEE 151
Sections 12-11A.207 and 12-11B.207. 151
DISABILITY ACCESS ACCOUNT 151
Sections 12-11A.208 and 12-11B.208. 151
DETECTABLE WARNING PRODUCTS AND DIRECTIONAL SURFACES 151
Sections 12-11A.209 and 12-11B.209. 151
SIGNIFICANT DEGRADATION 151
Sections 12-11A.210 and 12-11B.210. 151
SELECTION OF INDEPENDENT ENTITY 151
Sections 12-11A.211 and 12-11B.211. 151
CHAPTER 12-12 ENGINEERING REGULATION—QUALITY AND DESIGN OF THE MATERIALS OF CONSTRUCTION 152
STANDARD 12-12-1 CALIFORNIA STANDARD FOR EARTHQUAKE-ACTUATED GAS SHUTOFF VALVES . 152
SCOPE 152
Sec. 12-12-101. 152
Sec. 12-12-101.1. 152
CHAPTER 12-13 STANDARDS FOR INSULATING MATERIAL 153
DEPARTMENT OF CONSUMER AFFAIRS Bureau of Home Furnishings and Thermal Insulation 153
APPLICATION AND SCOPE 153
Sec. 12-13-1551. 153
DEFINITIONS 154
Sec. 12-13-1552. 154
QUALITY STANDARDS 155
Sec. 12-13-1553. 155
UREA FORMALDEHYDE FOAM INSULATION SAFETY NOTICE 168
APPROVAL OF TESTING LABORATORIES 172
Sec. 12-13-1554. 172
CERTIFICATION 172
Sec. 12-13-1555. 172
QUALITY ASSURANCE (Reserved) 173
Sec. 12-13-1556. 173
IDENTIFICATION 174

Sec. 12-13-1557. 174
INSPECTIONS 174
Sec. 12-13-1558. 174
PERFORMANCE TESTS 175
Sec. 12-13-1559. 175
COSTS OF INSPECTION AND TESTING (Reserved) 175
Sec. 12-13-1560. 175
ENFORCEMENT (Reserved) 175
Sec. 12-13-1561. 175
RELEASE OF INFORMATION 175
Sec. 12-13-1562. 176
LIABILITY 176
Sec. 12-13-1563. 176
INSULATING EXISTING BUILDINGS 176
Sec. 12-13-1564. 176
INTERPRETATION 177
Sec.12-13-1565. 177
CHAPTER 12-16-1 ENGINEERING REGULATIONS—QUALITY AND DESIGN OF THE MATERIALS OF CONSTRUCTION 178
STANDARD 12-16-1 CALIFORNIA STANDARD FOR EARTHQUAKE-ACTUATED AUTOMATIC GAS SHUTOFF SYSTEMS 178
SCOPE 178
Sec. 12-16-101. 178
Sec. 12-16-101.1. 178
CHAPTER 12-16-2 ENGINEERING REGULATIONS—QUALITY AND DESIGN OF THE MATERIALS OF CONSTRUCTION 179
STANDARD 12-16-2 CALIFORNIA STANDARD FOR RESIDENTIAL EXCESS FLOW ACTUATED AUTOMATIC GAS SHUTOFF VALVES 179
SCOPE 179
Sec. 12-16-201. 179
Sec. 12-16-201.1. 179
CHAPTER 12-31C RADIATION SHIELDING STANDARDS 180
STANDARD 12-31C-1 180

ALL HEALING ARTS X-RAY INSTALLATIONS 180
Sec. 12-31C-101. 180
CHAPTER 12-71 AIR FILTERS 181
AIR FILTERS STANDARD 12-71-1 181
DESCRIPTION OF TEST APPARATUS, METHOD AND CLASSIFICATION REQUIREMENTS FOR AIR FILTERS 181
Sec. 12-71-100. 181
CHAPTER 12-72-1 PROTECTIVE SIGNALING SYSTEMS 183
PROTECTIVE SIGNALING SYSTEMS, STANDARD TEST PROCEDURES STANDARD 12-72-1 183
SCOPE 183
Sec. 12-72-100. 183
TEST REPORTS 183
Sec. 12-72-101. 183
GENERAL 184
Sec. 12-72-102. 184
PERFORMANCE 193
Sec. 12-72-103. 193
PRINTED WIRING BOARDS 203
Sec. 12-72-104. 203
RELAYS FOR PROTECTIVE SIGNALING SERVICE 205
Sec. 12-72-105. 205
SEMICONDUCTOR TESTS 206
Sec. 12-72-106. 206
ELECTRICAL RATING 207
Sec. 12-72-107. 207
TABLE 12-72-1A—CAST-METAL ENCLOSURES 207
TABLE 12-72-1B—SHEET-METAL ENCLOSURES 208
TABLE 12-72-1C—MINIMUM ACCEPTABLE SPACINGS IN INCHES[1, 2] 209
TABLE 12-72-1D—ENDURANCE TEST 210
CHAPTER 12-72-2 PROTECTIVE SIGNALING SYSTEMS 211
SINGLE- AND MULTIPLE-STATION FIRE ALARM DEVICES MECHANICALLY OPERATED TYPE STANDARD 12-72-2 211

SCOPE 211
Sec. 12-72-200. 211
TEST REPORTS 211
Sec. 12-72-201. 211
GENERAL 212
Sec. 12-72-202. 212
PERFORMANCE 214
Sec. 12-72-203. 214
INSTRUCTIONS 220
Sec. 12-72-204. 220
MARKING 221
Sec. 12-72-205. 221
TESTING OVEN 222
Sec. 12-72-206. 222
TABLE 12-72-2A—TEMPERATURE CLASSIFICATIONS 223
TABLE 12-72-2B—TEST TEMPERATURES 224
FIGURE 12-72-2-1—TIME-TEMPERATURE CURVE—15-FOOT SPACINGS 224
FIGURE 12-72-2-2—FIRE-TEST LAYOUT 225
FIGURE 12-72-2-3—TEST OVEN 226
CHAPTER 12-72-3 PROTECTIVE SIGNALING SYSTEMS 227
SMOKE DETECTORS, COMBUSTION PRODUCTS TYPE STANDARD 12-72-3 227
SCOPE 227
Sec. 12-72-300. 227
TEST REPORTS 228
Sec. 12-72-301. 228
GENERAL 229
12-72-302. 229
PERFORMANCE 245
Sec. 12-72-303. 245
TESTS ON THERMOPLASTIC MATERIALS 263
Sec. 12-72-304. 263
TABLE 12-72-3A—CAST-METAL ENCLOSURES 266

TABLE 12-72-3B—SHEET METAL ENCLOSURES 266
TABLE 12-72-3C—THICKNESS OF GLASS COVERS 266
TABLE 12-72-3D—THICKNESS OF INSULATING MATERIAL 267
TABLE 12-72-3E—MINIMUM SPACINGS 268
TABLE 12-72-3F—MAXIMUM TEMPERATURE RISES 269
TABLE 12-72-3G—OBSCURATION—OPTICAL DENSITY CHART (Based on a 5-foot light beam) 270
FIGURE 12-72-3-1—SMOKE DETECTOR TEST CHAMBER 271
FIGURE 12-72-3-2—FIRE TEST DETECTOR INSTALLATION 271
FIGURE 12-72-3-3—JARRING TEST 272
HISTORY NOTE APPENDIX 273

CHAPTER 12-1
ADMINISTRATION

SECTION 12-1-101
TITLE, PURPOSE AND SCOPE

12-1-101.11 Application.

12-1-101.11.12 DSA/SS — Division of the State Architect, Structural Safety.

Application — Public elementary and secondary schools, community college buildings and state-owned or state-leased essential services buildings.

Enforcing Agency — Division of the State Architect, Structural Safety.

Authority: Education Code Sections 17310 and 81142, and Health and Safety Code Section 16022.

Reference: Education Code Sections 17280 through 17316, and 81130 through 81147, and Health and Safety Code Sections 16000 through 16023.

The Division of the State Architect has been delegated the responsibility and authority by the Department of General Services to review and approve the design and observe the construction of public school buildings and state-owned or state-leased essential services buildings.

The applicable building standards are as follows:

1. **Administrative Regulations.**

   1.1 School Buildings; Sections 4-301 through 4-355, Group 1, Chapter 4, Part 1, Title 24, California Code of Regulations.

   1.2 State-owned or State-leased Essential Services Buildings; Sections 4-201 through 4-249, Chapter 4, Part 1, Title 24, California Code of Regulations.

2. Technical Regulations.

Various model codes adopted by reference into the *California Building Standards Code*, Title 24, Parts 2, 3, 4, 5, 6, 7 and 12, California Code of Regulations, for school buildings and state-owned or state-leased essential service buildings.

SECTION 12-1-106
PERMITS

12-1-106.3.3.1 [For DSA/SS] Public schools.
Plans and specifications for the construction, alteration or addition to any school building owned,

leased or rented by any public school district shall be submitted to the Division of the State Architect for review and approval.

For all other provision, see the 2010 Edition, Title 24, Part 12, Chapter 12-1.

CHAPTER 12-3
RELEASING SYSTEMS FOR SECURITY BARS IN DWELLINGS

(This standard includes provisions of Underwriters Laboratories Subject 2326, Appendix B, dated December 17, 1999, reprinted with their permission.)

INTRODUCTION

SECTION 12-3-1
SCOPE

12-3-1.1
These requirements cover releasing systems for bars, grilles, mesh, glazing or other items intended to provide security at doors and windows required for emergency escape from dwelling units. When actuated by the occupant, the system allows the obstructions over the door or window to be moved so occupants can escape in the event of an emergency.

12-3-1.2
These requirements only cover the ability of the releasing system to be manually activated from the interior of a dwelling unit by an occupant to effect an escape through the protected opening.

12-3-1.3
These requirements cover releasing systems intended for use on the interior side of doors or windows in all climatic locations.

12-3-1.4
These requirements do not evaluate the ability of the releasing system or obstructions to resist an external forced entry attack.

12-3-1.5
These requirements do not evaluate the ability of the releasing system or obstructions to be opened or removed from the exterior of the residential dwelling unit by emergency response personnel during rescue operations.

12-3-1.6
Products covered by these requirements are intended for installation in dwelling units to protect door and window openings that are designated by the *California Building Standards Code* to be used as the secondary means of escape from the living area.

12-3-1.7
Products covered by these requirements are not intended to be used to protect doors in means of egress path for nonresidential occupancies, the common egress path of multifamily residential dwelling units or the primary means of egress path in a single-family dwelling unit.

12-3-1.8
These requirements do not cover window guards or fall prevention devices that are intended to prevent falls from upper story windows.

12-3-1.9
These requirements do not apply to storm doors and windows or light duty screens used for insect control.

12-3-1.10
A product that contains features, characteristics, components, or materials new or different from those covered by these requirements, and that involve a risk of fire, electric shock, or injury to persons shall be evaluated using the appropriate additional component and end-product requirements as determined necessary to maintain an acceptable level of safety.

SECTION 12-3-2
GENERAL

12-3-2.1 Components.

12-3-2.1.1
Except as indicated in Section 12-3-2.1.2, a component of a product covered shall comply with the requirements for that component.

12-3-2.1.2
A component need not comply with a specific requirement that:

(a) Involves a feature or characteristic not needed in the application of the component in the product covered by these requirements, or

(b) Is superseded by these requirements.

12-3-2.1.3
A component shall be used in accordance with its recognized rating established for the intended conditions of use.

12-3-2.1.4
Specific components are recognized as being incomplete in construction features or restricted in performance capabilities. Such components are intended for use only under limited conditions, such as certain temperatures not exceeding specific limits, and shall be used only under those specific conditions for which they have been recognized.

12-3-2.2 Units of measurement.

12-3-2.2.1
When a value for measurement is followed by a value in other units in parentheses, the first stated value is the requirement.

12-3-2.3 Installation instructions.

12-3-2.3.1
A copy of the operating and installation instructions or equivalent information is to be furnished with the samples submitted for investigation for use as a guide in the examination and test of the mechanism. For this purpose, a printed edition is not required.

12-3-2.4 Definitions.

12-3-2.4.1 Dwelling unit.
A single unit, providing complete, independent living facilities for one or more persons, including permanent provisions for living, sleeping, eating, cooking and sanitation.

12-3-2.4.2 Escape.
For the purposes of these requirements, escape refers to movement of occupants from the interior of a residential dwelling unit to a safe point outside of the dwelling unit during an emergency fire condition.

12-3-2.4.3 Emergency means of escape.
A passage independent of and remote from the primary means of escape that provides a means of travel from living and sleeping spaces inside a dwelling unit to the outside.

12-3-2.4.4 Means of escape.
A concept included in building codes that, in most cases, requires sleeping rooms and living areas in dwelling units to be provided with at least one primary means of escape and one secondary means of escape to the outside.

12-3-2.4.5 Primary means of escape.
A door, stairway or ramp providing a means of unobstructed travel from living spaces inside a dwelling unit to the outside at street or ground level.

12-3-2.4.6 Security bars.
For the purposes of these requirements, the term “security bars” includes “burglar bars” and refers to metal and other bars, grilles, grates and other barriers that are designed to provide security for doors and windows in dwelling units. The purpose of security bars, by their mere presence on a building, is to deter a potential forced entry into the dwelling.

CONSTRUCTION

SECTION 12-3-3
ASSEMBLY

12-3-3.1
Security bar releasing systems consist of the security bars, latches, manual actuators, cables, connectors, hinges and mounting hardware. The entire system shall be packaged in a single container. Standard mounting hardware including screws, bolts and washers are allowed to be provided separately.

Exception: The security bars shall be allowed to be provided separately if the instruction manual complies with Section 12-3-13.2.

12-3-3.2
The system shall be of a type capable of being readily maintained in proper operating condition.

12-3-3.3
The system shall be designed to immediately unlatch the security bars when actuated. It shall be able to be operated from the inside of a building by the occupants without the use of tools, keys, or special knowledge or effort.

12-3-3.4
The manual actuator used to release the security bars shall be designed to be mounted inside the dwelling unit for operation by the occupants. Covers or other barriers that can obstruct access to actuators shall not be provided if they inhibit the proper operation of the system.

12-3-3.5
The release mechanism shall not depend on springs to release the latch, although springs are allowed to be provided to assist in the operation.

12-3-3.6
The system shall be designed to prevent it from being locked in a closed position with a pad lock or similar device.

12-3-3.7
Systems provided with an automatic actuating mechanism shall also include a manual release system that complies with these requirements. The automatic actuation portion of the system, even in the event of its failure, shall not inhibit operation of the manual releasing system.

12-3-3.8
Manual actuation of the system shall release the security bars quickly and with simple, easily understood and intuitive motions. The system shall be capable of being operated in all lighting conditions.

12-3-3.9
Manual actuation of the system shall not require two different forces to be applied at the same time, such as applying force to the actuator while also pushing on the bars.

12-3-3.10
When fully opened, the assembly shall provide a minimum clear opening of not less than 5.7 square feet (0.53 m^2) with the width not less than 20 inches (508 mm) and the height not less than 24 inches (610 mm), measured parallel to the plane of the opening.

12-3-3.11
Security bars shall be constructed so that they do not swing up to open. They shall not include projections that can easily snag the clothing of those escaping through the opening.

12-3-3.12
Security bars shall have been constructed such that a sphere 4 inches (102 mm) in diameter shall not pass through any opening and shall not create other potential head entrapment hazards.

SECTION 12-3-4
MATERIALS

12-3-4.1
The materials employed shall have adequate mechanical strength to perform their expected function.

12-3-4.2
O-rings, gaskets and seals shall comply with UL Standard 157, 1996 Edition. Polymeric materials shall comply with UL Standard 746C, 1995 Edition, Section 25-27.

> **Exception:** O-rings, gaskets, seals and polymeric materials that are used as decorative parts, or whose failure will not affect the ability of the system to comply with these requirements.

12-3-4.3
Components constructed of dissimilar metals shall not be used in applications where contact between them is likely to cause galvanic corrosion. The materials employed shall reduce the likelihood of the release mechanism becoming inoperative due to corrosion.

12-3-4.4
Ferrous metal parts shall be 300 series stainless steel or protected against corrosion using minimum G60 or A60 hot-dipped mil galvanization, 0.0104 mm thick zinc coating, 0.0127 mm thick cadmium coating or two coats of organic outdoor paint.

12-3-4.5 Manual actuators.

12-3-4.5.1
Security bar releasing assembly mechanisms shall include a manual actuation mechanism that is capable of unlatching the security bars so that they can be opened by the occupants. The actuating force shall be applied in one of the following manners:

Finger actuated: Pushing with the index finger or pulling a loop with the index finger in a curled position.

Hand actuated: Pulling, pushing, twisting, rotating or turning a lever, knob, handle, rod or similar actuator with the hand or multiple fingers.

Foot actuated: Kicking, depressing or stepping on an actuating pedal, lever, stirrup or similar actuator.

12-3-4.5.2
On foot-actuated systems, only a single foot motion shall be used to disengage the bar assembly from the latch. On finger- and hand-actuated systems, one or two distinct hand or finger motions shall be used to disengage the bar assembly from the latch.

12-3-4.5.3
Releasing the actuator after the latch has been disengaged from the bar assembly shall not reengage the bar assembly.

12-3-4.5.4
No features or methods shall be provided or referenced in the instruction manual to inhibit the operation of the releasing mechanism.

12-3-4.6 Cables and connectors.

12-3-4.6.1
Cables connecting actuators to latches and release mechanisms shall only be used in applications where the force transmitted by them during normal operation is less than $^{1}/_{10}$ the manufacturer's rated working tension or compression.

12-3-4.6.2
Cables and connectors shall not be damaged, or have wire strands frayed during normal installation or use, and shall not contact sharp objects when installed as intended.

12-3-4.6.3
The means used to secure cables or connectors to latches, release mechanisms and actuators shall provide a tight, reliable nonslip connection.

12-3-4.7 Hinges.

12-3-4.7.1
Hinges shall operate smoothly and reliably, and shall not be susceptible to rust or corrosion.

PERFORMANCE

SECTION 12-3-5
TEST SETUP AND SAMPLE PREPARATION

12-3-5.1 Sample selection.

12-3-5.1.1
Representative samples of the releasing system shall be assembled to a test fixture as described in the installation instructions, unless otherwise noted in specific tests. The assembly shall include the mounting, hardware, releasing mechanisms and fasteners recommended in the instructions.

12-3-5.1.2
Samples to be tested shall include each type and sizes of releasing system shown in the installation instructions. Each type of releasing mechanism shall be subjected to the complete test program, unless it can be shown that tests on one type of mechanism are representative of the worst case testing on another mechanism. The sample shall be tested with mounting hardware and security bars that represent the worst case conditions of use. This shall be considered to be the security bars with the heaviest weight, greatest dimensions, and systems that create the greatest torque, moment and frictional forces on the hinges and releasing mechanism.

12-3-5.1.3
The test report shall document the systems tested, along with the basis for sample selection.

12-3-5.2 Test fixture.

12-3-5.2.1
The test fixture in which the assembly is mounted shall consist of the wood stud construction described in Section 12-3-5.2.2. Systems that require a specific mounting arrangement not represented by these test fixtures, such as masonry or brick, shall be mounted in a fixture of equivalent dimensions and rigidity, as described in the installation instructions. If agreeable to the testing laboratory and manufacturer, the wood stud fixture shall be representative of all mounting structures, provided the system is securely held in place in the fixture during all tests.

12-3-5.2.2
The entire test fixture shall be constructed of commercially available two by four trade size vertical wood studs [nominal 1.5 inches by 3.5 inches (38.1 mm by 89 mm)], spaced on maximum 16 inch (406 mm) centers. The opening shall be framed with two by four plates and minimum two layers of two by four for headers. For window openings, a minimum of two layers of two by four shall be used for the sill and cripple studs shall be provided. The frame shall be secured in place so it does not move when the system is subjected to the test forces noted below. The frame shall extend a minimum of 12 inches (305 mm) above and on each side of the opening.

12-3-5.2.3
Actual doors and windows or their frames shall not be required to be mounted in the opening unless the presence of such doors, windows or frames affects the operation of the system, or unless part of the system is mounted on the door or window frame.

12-3-5.2.4
The exterior side of the assembly shall be covered by $^{3}/_{4}$-inch (19 mm) thick trade size CDX plywood, secured with minimum $1^{1}/_{2}$-inch (38 mm) nails or screws, secured at least every 12 inches (305 mm) to each stud, sill and header. The interior side of the assembly shall be covered with a layer of $^{1}/_{2}$-inch (13 mm) gypsum wallboard, secured with minimum $1^{1}/_{4}$-inch (32 mm) nails or screws at least every 12 inches (305 mm) to each stud, sill and header.

12-3-5.2.5
Openings in the test fixture shall be sized to accommodate the size of the assembly under test, as described in the installation instructions. Opening size shall be allowed to vary if the size used is judged to not affect the results of any test performed.

12-3-5.3 Sample assembly.

12-3-5.3.1
Samples of the releasing system shall arrive at the test site in the packaging anticipated for

distribution and sale, and accompanied by the installation instructions. The samples are to be installed on the test fixture by a representative of the certification organization, using common hand and power tools as recommended by the instruction manual. Any specialty tools required for assembly shall be so identified in the instructions.

12-3-5.3.2
When multiple tests are required on an assembly, they are allowed to be performed on the same test fixture, provided that new hole or openings are used for mounting. Portions of the test fixture shall be allowed to be replaced to accommodate new mounting holes or brackets.

12-3-5.3.3
Samples that include grease, graphite, silicon or other lubricants shall also be tested with the lubricant removed or not applied.

12-3-5.3.4
When assembled in accordance with the installation instructions the system shall be securely held in place in the test fixture and shall operate consistently in the intended fashion.

SECTION 12-3-6
SECURE ATTACHMENT TEST

12-3-6.1
Two samples of the system shall be subjected to the following test sequence.

12-3-6.2
The system, when in the closed position, shall resist 50-pound (22 N) force without opening, loosening in the test fixture or damaging the releasing assembly. The force shall be applied on the exterior side of the test fixture in a location that is most likely to move or damage the system. The force shall be gradually applied perpendicular to the opening and held for a period of one minute. A $^{3}/_{8}$-inch (10 mm) diameter rope looped through the security bars, or similar arrangement, shall be used to apply the force.

SECTION 12-3-7
OPERATION TEST

12-3-7.1
Following the Secure Attachment Test, each of the two samples of the system shall unlatch immediately without intentional delay during each of 10 attempts to operate the system, and the security bars shall be fully opened to create the opening specified in Section 12-3-3.10. During each attempt, the actuating mechanism shall be operated as intended, using a finger, hand or foot movement as described in the operating instructions provided to unlatch the security bars. The security bars shall then be opened to the full open position, and the system shall then be reset to the closed position. An examination shall be performed to verify that the security bars are completely reset prior to the next attempt.

12-3-7.2
Springs provided in the latch or on the security bars that are intended to move the security bars from the latched position shall be removed or disabled prior to the test.

12-3-7.3
Prior to the test, the assembly shall be operated and reset a number of times to acquaint the operator with the system and its opening and reselling operation. On some systems, it may be necessary to slam, tap or otherwise carefully align the security bars in the latch to successfully reset the system into the closed position.

12-3-7.4
In the event that the actuating mechanism or assembly does not operate as intended during each of the 10 attempts, the test assembly, mounting method, actuating motion and system resetting procedure shall be reviewed to determine a potential cause of failure. After correcting any identified problems, the set of 10 operations shall be repeated with no unsuccessful attempts.

SECTION 12-3-8
MANUAL ACTUATION TEST

12-3-8.1
Following the Operation Test, each of the two sample assemblies shall be operated five times, and the forces required to unlatch the system shall be measured and recorded. These forces shall not exceed the values indicated in Sections 12-3-8.2 through 12-3-8.4.

12-3-8.2
A force gauge shall be used to apply the actuating force. The force shall be applied in the orientation anticipated by the design, using an appropriate force gauge and attachments, such as hooks, loops or probes. The gauge shall be capable of measuring the maximum force applied on each attempt. The force shall be applied in a location and fashion that is most likely to unlatch the actuator, and shall be allowed to range from a slow gradual application of force to a faster application of force of not less than 1 second in duration.

12-3-8.2.1
The average force required to unlatch finger-actuated systems shall not exceed 5 pounds (22 N) over the five attempts. The force required to unlatch the system during any of the attempts shall not exceed 10 pounds (44 N).

12-3-8.2.2
The average force required to unlatch hand-actuated systems shall not exceed 5 pounds (22 N) over the five attempts. The force required to unlatch the system during any of the attempts shall not exceed 10 pounds (44 N).

12-3-8.2.3
The average force required to unlatch foot-actuated systems shall not exceed 15 pounds (66 N) over the five attempts. The force required to unlatch the system during any of the attempts shall not exceed 30 pounds (132 N).

12-3-8.3
In lieu of complying with Section 12-3-8.2, foot-actuated systems designed to be operated by a

kick shall successfully unlatch and disengage the latching mechanism each of five times when subjected to the following impact. The impact shall be applied by swinging a 25-pound (11.4 kg) weight on a 4-foot (1.2 m) pendulum from 10 inches (254 mm) away, measured horizontally. The point of impact on the foot actuator shall be at the bottom of the pendulum swing.

12-3-8.4
Once the system is unlatched, a maximum force required to set the security bars in motion shall not exceed 30 pounds (132 N), and the maximum force required to open the security bars to the minimum required width shall not exceed 15 pounds (66 N).

SECTION 12-3-9
ENDURANCE TEST

12-3-9.1
A sample of the security bar releasing system shall function as intended during 250 cycles of operation without failure or excessive wear of the parts, including serving or fraying of individual cable wires. Following the cycling, the system shall be subjected to the Operation Test.

12-3-9.2
The system shall be operated and reset as described in the manufacturer's operating instructions. As part of the cycling, it is only necessary to unlatch, disengage and reset the system, and not open the security bars to the full open position. The cycling rate shall not exceed 30 cycles per minute.

SECTION 12-3-10
ENVIRONMENTAL EXPOSURE TEST

12-3-10.1
After each of the following exposures, test assemblies shall be subjected to the Manual Actuation Test. The test shall be performed while the test assemblies are in the test chambers, or immediately after their removal from the test chamber. Opening forces after these conditionings shall not exceed the values shown in Section 12-3-8.2 or 12-3-8.3. A single sample shall be subjected to each exposure. The same sample, or different sample, shall be allowed to be used for each exposure condition.

12-3-10.2 Elevated ambient.
Samples shall be conditioned in a 120°F (49°C) environment for 24 hours.

12-3-10.3 Low ambient.
Samples shall be conditioned in a 32°F (0°C) environment for 24 hours.

12-3-10.4 Humidity test.
Samples shall be conditioned for 24 hours in moist air having a relative humidity of 85 +/– 5 percent at a temperature of 90°F +/– 5°F (32 +/– 2°C).

SECTION 12-3-11
ABUSE TEST

12-3-11.1
A sample shall comply with the Manual Actuation Test requirements in Sections 12-3-8.2 and 12-3-8.3 after being subjected to the simulated abuse provided in Section 12-3-11.2.

12-3-11.2
The sample shall be subject to six impacts of 5 feet-pounds (6.8 N · m) each applied with a 2-inch diameter (51 mm) steel ball on portions of the release system that are most likely to adversely affect the operation of the system.

MARKINGS AND INSTRUCTIONS

SECTION 12-3-12
MARKINGS

12-3-12.1
Security bars and the latching mechanism shall be permanently marked with the company name, model number and date of manufacture. When a manufacturer produces assemblies at more than one factory, each such assembly shall have a distinctive marking to identify it as the product of a particular factory.

12-3-12.2
Symbols or diagrams shall be marked on the manual actuator to identify how to manually release the security bars. The diagram or symbols shall be readily visible to occupants when the assembly is mounted as intended.

12-3-12.3
Security bars and the latching mechanism shall be marked with the name or logo of the testing agency certifying to compliance of the products with this standard, and identification of the standard as SFM SB-2000.

12-3-12.4
Adhesive-backed labels used to provide required markings shall be suitable for the application and shall comply with UL Standard 969, 1995 Edition.

SECTION 12-3-13
INSTRUCTION MANUAL

12-3-13.1
Installation and operating instructions shall be provided with each system. Installation instructions shall describe how to install and initially test the system, and provide periodic testing and maintenance. Operating instructions shall be provided that include diagrams, drawing and symbols describing how to operate the system and escape in the event of a fire or other emergency.

12-3-13.2
When the releasing mechanism assembly is provided separately from the security bar assembly in accordance with Section 12-3-3.1, the instruction manual shall describe the compatible security bars that have been investigated and found suitable for use with the releasing

assembly. Security bars shall be identified by the manufacturer's name and model number and maximum dimensions.

12-3-13.3
The installation instructions shall include directions on mounting the actuator inside the room at a height not exceeding 48 inches (1.2 m) from the finished floor.

CHAPTER 12-4A
LABORATORY ANIMAL QUARTER STANDARDS

STANDARD 12-4A-1

Department of Health Services

Authority: Sections 102, 208 and 25811.

Reference: Sections 102, 208 and 436.5.

Laboratory Animal Quarters

Sec. 12-4A-101.
Laboratory animal quarters shall comply with Chapter IV, “Guide for Care and Use of Laboratory Animals,” U.S. Department of Health, Education and Welfare, Publication Number 85-23, Revised 1985.

CHAPTER 12-4-1
STAGE AND PLATFORMS

SMOKE OR HEAT VENTILATORS
STANDARD 12-4-1

STATE FIRE MARSHAL

SMOKE OR HEAT VENTILATORS

Sec. 12-4-100.

(a) **Application.** The minimum design, construction and performance standard set forth herein for stage and platform smoke or heat ventilators are those deemed necessary to establish conformance to the provisions of these regulations.

(b) **Scope.** This standard covers ventilators and shutters designed to open under conditions of excessive smoke or heat to provide openings for the release to the atmosphere of accumulated smoke or heat.

A smoke or heat ventilator covered by this standard consists of a prefabricated frame of metal or other noncombustible materials; a cover of noncombustible or plastic materials; an automatic releasing device; and the control rigging. The control rigging may include electrically operated units for normal opening and closing.

(c) **Tested and listed component parts.** Component parts, devices, combinations of devices and electrical equipment which have been tested and listed by an approved testing agency for the intended purpose need not be individually retested. Such individually tested and listed component parts, devices and equipment shall be subjected to the performance standard tests to determine their suitability for use in the smoke or heat ventilator.

(d) **Alternate constructions.** Ventilators having materials or forms of construction differing from this standard may be investigated and tested in accordance with these regulations, and if found to be substantially equivalent in performance may be given recognition for approval.

(e) **Marking.** Units shall be provided with a manufacturers label or other permanent markings clearly identifying the manufacturer and model numbers. Plastics in dome-type ventilators shall be identified by brand markings, imprint or other markings acceptable to the State Fire Marshal.

(f) **Framing design.** The unit and cover shall be so formed and assembled that they will have the strength and rigidity necessary to resist the abuses to which they are liable to be subject without adversely affecting their performance, and without operational failure due to partial collapse with the resulting reduction of spacings, loosening or displacement of parts, or other serious defects.

(g) **Curb design.** The ventilator design shall include provisions for mounting on roof curbs or shall in themselves incorporate a design to provide the equivalent of roof curbs.

(h) **Corrosion resistant.** Ventilators shall be constructed of corrosion-resistant materials. Iron and steel parts shall be protected against corrosion by enameling, galvanizing, plating or other equivalent means. This includes all parts upon which proper mechanical operation may depend. Bearings and hinge points shall be corrosion resistant or of such material and design as to ensure against binding due to corrosion.

Ventilators designed and constructed in accordance with the above may be accepted without additional tests establishing the effects of frost, expansion by heat or warping of the framework.

(i) **Plastic covers.** Plastic covers shall be of the dome type having a continuous curvature with the center not less in height than 10 percent of the span having the least dimension but not less than 5 inches.

(j) **Area.** The minimum dimension for an effective vent opening should not be less than 4 feet in any direction. The effective venting area is the minimum cross-sectional area through which smoke and gases must pass in route to the atmosphere. The effective venting area of monitors shall be the cross-sectional area of the throat or the area of the side lights on one side of the monitor, whichever is the lesser.

Ventilators having plastic covers shall not exceed 100 square feet in area.

(k) **Fail-safe design.** The ventilator cover, lid, sidelight or shutter shall be designed to fail safe in the event of fire and shall not fall back over the opening. It shall require a manual operation to reclose the cover, lid, sidelight or shutter.

(l) **Opening counterforce.**

1. Gravity-type ventilators shall have securely attached weights to provide a continuous excess counterweight of not less than 30 pounds throughout the opening arc of the lid or sidelight.

2. Devices used to open ventilators shall be designed to exert a continuous opening force, at all times normal to the lid of not less than 30 pounds. When springs are used they shall not be stressed to more than 50 percent of their capacity when the lid is in a closed position.

3. Louvered-type shutters intended for installation in gables shall be of the gravity type. The excess counter-weight shall be not less than 2 pounds per square foot of gross shutter area.

(m) Automatic heat or smoke detectors shall be placed in the underside of the ventilator at or above the roof line.

(n) **Test procedure.**

1. Ventilators and shutters shall be mounted for the tests in a manner simulating their intended use. The lid, cover or sidelight shall be held in a closed position by a fusible link, or an automatic heat or smoke actuated detector or combination thereof, and the fusible link or detector controls.

2. The opening counterforce shall be measured at the geometric center of the lid, cover or sidelight. The automatic detector shall be released and measurements of the counterforce taken at various points throughout the opening arc but at not less than at 30 inches and at 60 inches from the plane of the lid when in a closed position, and at a point past 90 inches from the horizontal.

3. The opening force of gable-type shutter ventilators shall be measured from the top of the operating bar.

(o) **Test report.** The test report shall include but is not limited to the following:

1. A detailed description of the unit and its intended operation.

2. Engineering data and shop drawings. Shop drawings shall bear the seal or stamp of a registered or licensed engineer or architect attesting to the structural integrity of the ventilator as it relates to the provisions of Section 12-4-100 (f).

3. Photographs (4 inches by 5 inches or larger) of the unit with markings identifying component parts of the unit.

4. Description and results of the tests performed.

CHAPTER 12-7-1
FIRE-RESISTIVE STANDARDS

FIRE TESTS OF BUILDING CONSTRUCTION AND MATERIALS
STANDARD 12-7-1

STATE FIRE MARSHAL

SCOPE

Sec. 12-7-100.

(a) This standard for fire tests contains methods that are applicable to assemblies of masonry units and to composite assemblies of structural materials for buildings, including bearing and other walls and partitions, columns, girders, beams, slabs, and composite slab and beam assemblies for floors and roofs. They are also applicable to other assemblies and structural units that constitute permanent integral parts of a finished building.

(b) It is the intent that classifications shall register performance during the period of exposure and shall not be construed as having determined suitability for use after exposure.

FIRE TESTING FURNACES AND CONTROL

Sec. 12-7-101.
Fire testing furnaces and their control shall conform to SFM 12-7-1, Fire Testing Furnaces.

UNEXPOSED SURFACE TEMPERATURES

Sec. 12-7-102.

(a) **Thermocouples.** Temperatures of unexposed surfaces shall be measured with thermocouples placed under flexible, oven-dry, felted asbestos pads, 6 inches square, 0.4 inch in thickness, and weighing not less than 1.0 nor more than 1.4 pounds per square foot. The pads shall be sufficiently soft so that, without breaking, they may be shaped to contact over the whole surface against which they are placed. The wire leads of the thermocouple shall have an immersion under the pad and be in contact with the unexposed surface for not less than $3^{1}/_{2}$ inches. The hot junction of the thermocouple shall be placed approximately under the center of the pad. The outside diameter of protecting or insulating tubes shall not be more than $^{5}/_{16}$ inch. The pad shall be held firmly against the surface and shall fit closely about the thermocouples. The wires for the thermocouple in the length covered by the pad shall be not heavier than No. 18 B.&S. gage (0.04 inch) and shall be electrically insulated and heat- and moisture-resistant coatings.

Note: In tests of assemblies with roof coverings, the thermocouples and pads shall be placed on top of the roof covering.

(b) **Ceiling-floor, ceiling-roof assemblies.** Temperature readings shall be taken in the center of the plenum, on the bottom side of the floor or roof deck, and on the structural members in fire-endurance tests of ceiling-floor and ceiling-roof assemblies. Thermocouples shall be located on structural steel as specified in Section 12-7-110 (c). In combustible assemblies five or more thermocouples shall be located on the bottom of soffit of joists or beams. Thermocouples shall be placed in representative locations such as at midspan, over joints in the ceiling, over light fixtures, over air-outlet openings or similar locations.

(c) **Thermocouple locations on unexposed side.** Temperature readings shall be taken at not less than nine points on the surface of the unexposed side. Five of these shall be symmetrically disposed, one to be approximately at the center of the specimen and four at approximately the center of its quarter sections. The other four shall be located at the discretion of the testing authority to obtain representative information on the performance of the construction under test. None of the thermocouples shall be located nearer than $1^1/_2$ times the thickness of the construction, or nearer than 12 inches to the edges. An exception shall be made in those cases where there is an element of the construction at the edges which is not otherwise represented in the remainder of the construction. Also, none of the thermocouples shall be located opposite or on top of beams, girders, pilasters, or other structural members if temperatures at such points will obviously be lower than at other more representative locations.

(d) **Temperature intervals.** Temperature readings shall be taken at intervals not exceeding 15 minutes until a reading exceeding 212°F (100°C) has been obtained at any one point. Thereafter the readings may be taken more frequently at the discretion of the testing body, but the intervals need not be less than five minutes.

(e) **Maximum unexposed temperature rise.** Where the conditions of acceptance place a limitation on the rise of temperature of the unexposed surface, the temperature end point of the fire endurance period shall be determined by the average of the measurements taken at individual points; except that if a temperature rise 30 percent in excess of the specified limit occurs at any one of these points, the remainder shall be ignored and the fire endurance period judged as ended.

CLASSIFICATION AS DETERMINED BY TEST

Sec. 12-7-103.

(a) **Fire exposure report.** Results shall be reported in accordance with the performance tests prescribed in these methods. They shall be expressed in time periods of resistance, to the nearest integral minute. Reports shall include observations of significant details of behavior of the material or construction during the test and after the furnace fire is cut off, including information on deformation, spalling, cracking, burning of the specimen or its component parts, continuance of flaming and production of smoke. The form and contents of reports shall be in accordance with Section 12-7-115.

(b) **Structural fire report.** Reports of tests involving wall, ceiling-floor, ceiling-roof or beam constructions in which restraint is provided against expansion, contraction or rotation of the

construction shall describe the method used to provide this restraint and include details of the restraining frame as well as information recorded during the test concerning the forces imposed on that structure by the test specimen.

TEST SPECIMEN

Sec. 12-7-104.

(a) **Representative specimen.** The test specimen shall be truly representative of the construction for which classification is desired, as to materials, workmanship and details such as dimensions of parts, and shall be built under conditions representative of those obtaining as practically applied in building construction and operations. The physical properties of the materials and ingredients used in the test specimen shall be determined and recorded. When necessary for evaluation of test reports, the sponsor shall furnish them to the enforcing agency.

(b) **Specimen size.** The size and dimensions of the test specimen specified herein are intended to apply for rating constructions of dimensions within the usual general range employed in buildings. If the conditions of use limit the construction to smaller dimensions, a proportionate reduction may be made in the dimensions of the specimens for a test qualifying them for such restricted use.

DURATION AND CONDUCT OF TESTS

Sec. 12-7-105.

(a) **Fire endurance.** The fire endurance test on the specimen with its applied load, if any, shall be continued until failure occurs, or until the specimen has withstood the test conditions for a period equal to that herein specified in the conditions of acceptance for the given type of construction.

(b) **Hose stream test.** Where required by the conditions of acceptance, a duplicate sample shall be subjected to a fire exposure test for a period equal to one-half of that indicated as the resistance period in the fire endurance test, but not for more than one hour, immediately after which the sample shall be subjected to the impact, erosion, and cooling effects of a hose stream directed first at the middle and then at all parts of the exposed face, changes in direction being made slowly.

(c) **Exemption.** The hose stream shall not be required in the case of constructions having a resistance period, indicated in the fire endurance test, of less than one hour.

(d) **Optional program.** The submitter may elect, with the advice and consent of the testing body, to have the hose stream test made on the sample subjected to the fire endurance test and immediately following the expiration of the fire endurance test.

(e) **Stream equipment and details.** The stream shall be delivered through $2^1/_2$-inch hose, discharging through a National Standard Play Pipe of corresponding size equipped with a $1^1/_8$-inch discharge tip of the standard-taper, smooth-bore pattern without shoulder at the orifice. The water pressure and duration of application shall be as specified in Table SFM 12-7-1A.

(f) **Nozzle distance.** The nozzle orifice shall be 20 feet from the center of the exposed surface of the test sample if the nozzle is so located that, when directed at the center, its axis is normal to the surface of the test sample. If otherwise located, its distance from the center shall be less than 20 feet by an amount equal to 1 foot for each 10 degrees of deviation from the normal.

(g) **Protection and conditioning of test specimen.** The test specimen shall be protected during and after fabrication to ensure normality of its quality and condition at the time of test. It shall not be tested until a large portion of its final strength has been attained, and, if it contains moisture, until the excess has been removed to achieve an air-dry condition in accordance with the requirements given in Items 1 through 3. The testing equipment and sample undergoing the fire test shall be protected from any condition of wind or weather that might lead to abnormal results. The ambient air temperature at the beginning of the test shall be within the range of 50 to 90°F (10 to 32°C). The velocity of air across the unexposed surface of the sample, measured just before the test begins, shall not exceed 4.4 feet per second, as determined by an anemometer placed at right angles to the unexposed surface. If mechanical ventilation is employed during the test, an air stream shall not be directed across the surface of the specimen.

1. Prior to the fire test, constructions shall be conditioned with the objective of providing, within a reasonable time, a moisture condition within the specimen approximately representative of that likely to exist in similar constructions in buildings. For purposes of standardization, this condition is to be considered as that which would be established at equilibrium resulting from drying in an ambient atmosphere of 50 percent relative humidity at 73°F. However, with some constructions, it may be difficult or impossible to achieve such uniformity within a reasonable period of time. Accordingly, where this is the case, specimens may be tested when the dampest portion of the structure, the portion at 6-inch depth below the surface of massive constructions, has achieved a moisture content corresponding to drying to equilibrium with air in the range of 50 to 75 percent relative humidity at 73 ± 5°F. In the event that specimens dried in a heated building fail to meet these requirements after a 12-month conditioning period, or in the event that the nature of the construction is such that it is evident that drying of the specimen interior will be prevented by hermetic sealing, these requirements may be waived, except as to attainment of a large portion of final strength, and in the specimen tested in the condition in which it then exists.

2. Specimens shall be exposed to the controlled conditions outlined in Item 1 until the interior or dampest section of the assembly attains a relative humidity of 75 percent or less. If during the conditioning of the specimen it appears desirable or is necessary to use accelerated drying techniques, it is the responsibility of the laboratory conducting the test to avoid procedures which will significantly alter the structural or fire endurance characteristics of the specimen or both from those produced as the result of drying in accordance with procedures given in Item 1.

3. Within 72 hours prior to the fire test, information on the actual moisture content and distribution within the specimen shall be obtained. This information shall be included in the test report.

TESTS OF BEARING WALLS AND PARTITIONS

Sec. 12-7-106.

(a) **Size of sample.** The area exposed to fire shall be not less than 100 square feet with neither dimension less than 9 feet. The test specimen shall not be restrained on its vertical edges. The fire testing furnace, its arrangement and control during fire tests shall conform to SFM 12-7-3, Section 12-7-301 (a), Vertical Large-scale Wall Furnace.

(b) **Loading.** During the fire endurance test, and fire and hose stream test, a superimposed lead shall be applied to the construction in a manner calculated to develop theoretically, as nearly as practicable, the working stresses contemplated by the design.

(c) **Conditions of acceptance.** The test shall be regarded as successful if the following conditions are met:

1. The wall or partition shall have sustained the applied load during the fire endurance test without passage of flame or gases hot enough to ignite conditioned cotton waste, for a period equal to that for which classification is desired.

   Note: Cotton waste shall be conditioned by drying in an oven at a temperature of 120°F for a period of not less than one hour prior to the test.

2. The wall or partition shall have sustained the applied load during the fire and hose stream test as specified in Section 12-7-105, without passage of flame, of gases hot enough to ignite cotton waste, or passage of the hose stream, and after cooling but within 72 hours after its completion shall sustain the dead lead of the test construction plus twice the superimposed load specified above.

3. Transmission of heat through the wall or partition during the fire endurance test shall not have been such as to raise the temperature on its unexposed surface more than 250°F (139°C) above its initial temperature.

4. Deflection of the wall or partition during the fire endurance test shall not exceed 6 inches. The deflection of specimens varying from the dimensions given in Section 12-7-106 (a) shall be determined proportionately.

TESTS OF NONBEARING WALLS AND PARTITIONS

Sec. 12-7-107.

(a) **Size of sample.** The area exposed to fire shall be not less than 100 square feet, with neither dimension less than 9 feet. The test specimen shall be restrained on all four edges. The fire testing furnace, its arrangement and control during fire tests shall conform to SFM 12-7-3, Section 12-7-301 (a), Vertical Large-scale Wall Furnace.

(b) **Conditions of acceptance.** The test shall be regarded as successful if the following conditions are met:

1. The wall or partition shall have withstood the fire endurance test without passage of flame or gases hot enough to ignite conditioned cotton waste, for a period equal to that for which classification is desired.

   Note: Cotton waste shall be conditioned by drying in an oven at a temperature of 120°F for a period of not less than one hour prior to the test.

2. The wall or partition shall have withstood the fire and hose stream test as specified in Section 12-7-105 without passage of flame, of gases hot enough to ignite cotton waste, or passage of the hose stream.

3. Transmission of heat through the wall or partition during the fire endurance test shall not have been such as to raise the temperature on its unexposed surface more than 250°F (139°C) above its initial temperature.

4. Deflection of the wall or partition during the fire endurance test shall not exceed 6 inches. The deflection of specimens varying from the dimensions given in Section 12-7-107 (a) shall be determined proportionately.

TEST OF COLUMNS

Sec. 12-7-108.

(a) **Size of sample.** The length of the column exposed to fire shall, when practicable, approximate the maximum clear length contemplated by the design, and for building columns shall be not less than 9 feet. The contemplated details of connections and their protection, if any, shall be applied according to the methods of acceptable field practice.

(b) **Loading.**

1. During the fire endurance test, the column shall be exposed to fire on all sides and shall be loaded in a manner calculated to develop theoretically, as nearly as practicable, the working stresses contemplated by the design. Provision shall be made for transmitting the load to the exposed portion of the column without unduly increasing the effective column length.

2. If the submitter and the testing body jointly so decide, the column may be subjected to $1^{3}/_{4}$ times its designed working load before the fire endurance test is undertaken. The fact that such a test has been made shall not be construed as having had a deleterious effect on the fire endurance test performance.

(c) **Condition of acceptance.** The test shall be regarded as successful if the column sustains the applied load during the fire endurance test for a period equal to that for which classification is desired.

ALTERNATE TEST OF PROTECTION FOR STRUCTURAL STEEL COLUMNS

Sec. 12-7-109.

(a) **Application.** This test procedure does not require column loading at any time and may be used at the discretion of the testing laboratory to evaluate steel column protections that are not required by design to carry any of the column load.

(b) **Size and character of sample.**

1. The size of the steel column used shall be such as to provide a test specimen that is truly representative of the design, materials and workmanship for which classification is desired. The protection shall be applied according to the methods of acceptable field practice. The length of the protected column shall be at least 8 feet. The column shall be vertical during application of the protection and during the fire exposure. The rating of performance shall not be applicable to sizes of columns smaller than those tested.

2. The applied protection shall be restrained against longitudinal temperature expansion greater than that of the steel column by rigid steel plates or reinforced concrete attached to the ends of the steel column before the protection is applied. The size of the plates or amount of concrete shall be adequate to provide direct bearing for the entire transverse area of the protection.

3. The ends of the specimen, including the means for restraint, shall be given sufficient thermal insulation to prevent appreciable direct heat transfer from the furnace.

(c) **Temperature measurement.** The temperature of the steel in the column shall be measured by at least three thermocouples located at each of four levels. The upper and lower levels shall be 2 feet from the ends of the steel column, and the other two intermediate levels shall be equally spaced. The thermocouples at each level shall be so placed as to measure significant temperatures of the component elements of the steel section.

(d) **Exposure to fire.** During the fire endurance test, the specimen shall be exposed to fire on all sides for its full length.

(e) **Conditions of acceptance.** The test shall be regarded as successful if the transmission of heat through the protection during the period of fire exposure for which classification is desired does not raise the average (arithmetical) temperature of the thermocouples at any one of the four levels above 1000°F (537.8°C), or does not raise the temperature above 1200°F (648.8°C) at any one of the measured points.

TESTS OF FLOORS AND ROOFS

Sec. 12-7-110.
(The following is applicable to floors and roofs with or without attached, furred or suspended ceilings, and requires application of fire exposure to the underside of the construction.)

(a) **Size and construction of sample.**

1. The area exposed to fire shall be not less than 180 square feet, with neither dimension less than 12 feet. Structural members, if a part of the construction under test, shall lie within the combustion chamber and have a clearance of not less than 8 inches from its walls. No individual classification shall be made of structural members which have a clearance of less than 24 inches from its walls. The fire testing furnace, its arrangement and control during fire tests shall conform to the provisions of SFM 12-7-3, Section 12-7-301 (c), for Horizontal Large-scale Floor Furnace.

2. Structural members forming a part of the assembly shall be supported in accordance with the recommended fabrication procedures for the type of construction. Assemblies representing forms of construction that restrain structural elements and top deck shall be supported by a restraining frame, incorporated in or attachable to the furnace structure in such a manner that comparable restraint shall occur during the test.

(b) **Loading.** Throughout the fire endurance test, a superimposed load shall be applied to the test specimen. This load, together with the weight of the specimen, shall be as nearly as practicable the maximum theoretical dead and live loads permitted by nationally recognized design standards.

(c) **Temperature measurement.** The temperature of the steel in structural members shall be measured by thermocouples at three or more sections equally spaced along the length of the members with one section located at mid-span; alternately when thermocouples are placed at four sections, they may be at the quarter points provided no thermocouples shall be placed within 24 inches of the furnace walls; except that in cases where the cover thickness is not uniform along the specimen length, at least one of these sections shall include the point of minimum cover. For solid section steel beams, there shall be four thermocouples at each section: one at the center on the exposed face of the bottom flange, one on the edge of the bottom flange, one on the web at the center and one on the bottom at the edge of the top flange. For reinforced or prestressed concrete structural members, thermocouples shall be located on each of the tension reinforcing elements unless there are more than eight elements, in which case thermocouples shall be placed on eight elements of selected in such a manner as to obtain representative temperatures of all the elements. For designs employing trusses or open-web steel joists, four thermocouples shall preferably be placed at mid-span of each truss or joist, two on the bottom chord, one at the middle of the web element and one on the bottom of the top chord with locations selected in such a manner as to obtain representative temperatures of all the elements, provided, however, that no more than four joists need to be so instrumented. For designs employing combustible framing, three or more thermocouples shall be placed approximately at mid-span on three or more framing members and so located as to obtain representative temperatures on the soffits of the framing members.

(d) **Conditions of acceptance.** In obtaining an assembly classification, the following conditions shall be met:

1. The construction shall have sustained the applied load during the fire endurance test without passage of flame or gases hot enough to ignite conditioned cotton waste for a period at least equal to that for which classification is desired.

   Note: Cotton waste shall be conditioned by drying in an oven at a temperature of 120°F for a period of not less than one hour prior to the test.

2. The transmission of heat through the construction during the fire endurance test shall not have been such as to raise the average temperature of the thermocouples on its unexposed surface more than 150°F (139°C) above its initial temperature.

3. Structural failure, deflection or sagging of the structural elements of the test specimen or any portion of the structural elements in excess of 12 inches shall be judged as the end of the fire endurance period.

4. For assemblies employing steel structural members, including decks designed as structural diaphragms the transmission of heat through the protection during the period of fire endurance for which classification is desired does not raise the temperature at any location on the member above 1200°F, nor the average of the thermocouples at any section above 1000°F.

5. For assemblies employing multiple open web steel joists (spaced less than 48 inches on center), the transmission of heat through the protection during the period of fire endurance for which classification is desired does not raise the average of all thermocouples in all joists above 1000°F.

6. For assemblies employing concrete structural members, the transmission of heat through the cover to the steel during the period for which classification is desired does not raise the average temperature of the thermocouples at any section on the steel above 800°F for cold drawn prestressing steel or 1000°F for reinforcing steel.

(e) **Reports of results.** The fire endurance shall be reported for the floor or roof assembly as tested, and a different fire endurance classification from that of the assembly for structural members shall not be recorded without reference to Section 12-7-110 (f) and (g).

(f) **Alternate classification procedure for loaded structural frame members.** Fire endurance classifications may be developed for structural frame members tested as part of a floor or roof assembly as described in Section 12-7-110 (a) through (c) using the conditions of acceptance described in Section 12-7-110 (g). The fire endurance classification so derived shall be applicable to the structural frame member when used with any floor or roof construction which has a comparable or greater thermal capacity for heat dissipation from the beam, and equal or greater compressive strength than the floor or roof with which it was tested. The fire-resistance classification developed by this method shall not be applicable to sizes of structural frame members smaller than those tested.

(g) **Structural frame members, conditions of acceptance.**

1. The construction shall have sustained the applied load during the fire endurance test for a period equal to that for which classification is desired.

2. For assemblies employing solid steel beams the transmission of heat through the protection during the period of fire endurance for which classification is desired does not raise the temperature at any location on the member above 1200°F, nor the average temperature recorded by four thermocouples at any section above 1000°F.

3. For assemblies employing open-web steel joists or steel trusses spaced 4 feet or more on centers, the transmission of heat through the protection on the steel joists or trusses during the period of fire endurance for which classification is desired does not raise the average temperature of all joists or truss thermocouples above 1000°F.

4. For assemblies employing concrete structural members the transmission of heat through the cover to the steel during the period for which classification is desired does not raise the average temperature of the thermocouples at any section on the steel above 800°F for cold drawn prestressing steel or 1000°F for reinforcing steel.

TESTS OF LOADED RESTRAINED
STRUCTURAL FRAME MEMBERS

Sec. 12-7-111.

(a) **Application.** An individual classification of a structural frame member (beams, girders, joists, etc.) may be developed by this test procedure. The structural frame member may be tested with a representative floor or roof section; and the fire endurance classification so derived shall be applicable to the structural frame member when used with any floor or roof construction which has a comparable or greater thermal capacity for heat dissipation from the beam than the floor or roof with which it was tested. The fire endurance classification developed by this method shall not be applicable to sizes of structural frame members smaller than those tested.

(b) **Size and construction of specimen.** The structural frame member shall be such as to provide a test specimen that is representative of the design, materials and workmanship for which classification is desired. Any protection shall be applied according to the methods of acceptable field practice. The length of the structural frame member exposed to the fire shall be not less than 12 feet, and the member shall be tested in a horizontal position. Specimens representing forms of construction in which restraint due to thermal expansion occurs shall be supported by a restraining frame in such a manner that comparable restraint shall occur during the test. A section of a representative floor or roof construction not less than 5 feet wide, symmetrically located with reference to the structural frame member and extending its full length may be included in the test assembly and exposed to fire from below. The floor or roof construction shall not be supported or restrained along its span length or ends.

(c) **Furnace.** The fire testing furnace, its arrangement and control during fire tests shall conform to SFM 12-7-3, Fire Testing Furnaces, Section 12-7-301, for the Horizontal Large-scale Floor Furnace, or the Horizontal Large-scale Beam Furnace.

(d) **Loading.** Throughout the fire endurance test, a superimposed load shall be applied to the test specimen. This load, together with the weight of the specimen, shall be as nearly as practicable the maximum theoretical dead and live loads permitted by nationally recognized design standards.

(e) **Temperature measurements.** The temperature of the steel in structural members shall be measured by thermocouples at three or more sections spaced along the length of the members with one section located at the mid-span, except that in cases where the cover thickness is not uniform along the structural frame member length at least one of these sections shall include the point of minimum cover. For solid steel beams there shall be four thermocouples at each section: one shall be located at the center on the exposed face of the bottom flange: one on the edge of the bottom flange, one on the web at the center and one on

the bottom of the top flange. For open-web steel joists there shall be four thermocouples at each section: two on the bottom of the lower chord, one at the middle of the web and one on the bottom of the top chord. For trusses there shall be not less than four thermocouples at each section: one on the bottom of the top chord, one at the middle of the nearest diagonal or vertical member and two on the bottom of the lower chord. For reinforced or prestressed concrete structural members, thermocouples shall be located on each of the tension reinforcing elements, unless there are more than eight such elements, in which case thermocouples shall be placed on eight elements selected in such a manner as to obtain representative temperature on all the elements.

(f) **Conditions of acceptance.** In deriving a structural frame member classification, the following conditions shall be met:

1. The structural frame member shall have sustained the applied load during the fire endurance test for a period at least equal to that for which classification is desired.

2. For structural steel members, the transmission of heat through the protection during the period of fire endurance for which classification is desired does not raise the temperature of the thermocouple at any location on the structural steel member above 1200°F nor the average of the thermocouples at any section above 1000°F.

3. For concrete beams, the transmission of heat through the cover to the steel during the period of fire endurance for which classification is desired does not raise the average temperature of the thermocouples at any section on the steel above 800°F for cold drawn prestressing steel or 1000°F for reinforcing steel.

Sec. 12-7-112.

(a) **Application.** Where the size and construction of the sample, or the loading specified in Sections 12-7-110 (a) and (b) is not feasible by design or dimensions, this alternate test procedure may be used to evaluate the protection for steel beams, girders and trusses without application of design load, provided that the protection is not required by design to function structurally in resisting applied loads. The furnace and its control during fire tests shall conform to SFM 12-7-3, Fire Testing Furnaces, Section 12-7-301, for the Horizontal Small-scale Beam Furnace, the Horizontal Large-scale Beam Furnace or the Horizontal Large-scale Floor Furnace.

(b) **Size and character of sample.**

1. The size of the steel beam, girder or truss shall be such as to provide a test specimen that is representative of the design, materials and workmanship for which classification is desired. The protection shall be applied according to the methods of acceptable field practice, and the projection below the ceiling, if any, shall be representative of the conditions of intended use. The length of the beam, girder or truss exposed to the fire shall be not less than 7 feet, and the member shall be tested in a horizontal position. A section of a representative floor or roof construction not less than 5 feet wide, symmetrically located with reference to the beam, girder or truss and extending its full length, may be included in the test assembly and exposed to fire from below.

The rating of performance shall not be applicable to sizes of solid structural members or elements of built-up structural members, such as trusses, smaller than those tested.

2. The applied protection shall be restrained against longitudinal expansion greater than that of the steel beam, girder or truss by rigid steel plates or reinforced concrete attached to the ends of the member before the protection is applied. The ends of the member, including the means for restraint, shall be given sufficient thermal insulation to prevent appreciable direct heat transfer from the furnace to the unexposed ends of the member or from the ends of the member to the outside of the furnace.

(c) **Temperature measurement.** The temperature of the steel in the beam, girder or truss shall be measured with not less than four thermocouples at each of not less than three sections equally spaced along the length of the beam, girder or truss, symmetrically disposed and not nearer than 2 feet from the inside face of the walls of the furnace. The thermocouples at each section shall be symmetrically placed so as to measure significant temperatures of all component elements of the steel section.

(d) **Conditions of acceptance.** The test shall be regarded as successful if the transmission of heat through the protection during the period of fire exposure for which classification is desired does not raise the average (arithmetical) temperature of the thermocouples at one of the sections above 100°F, or does not raise the temperature above 1200°F at any one of the measured points. The fire-resistance classification so derived shall be applicable to the beam, girder or truss when used with any floor or roof construction which has an equal or greater thermal capacity for heat dissipation from the beam than the floor or roof with which it was tested.

TESTS OF CEILING CONSTRUCTIONS

Sec. 12-7-113.

(a) **Application.** This test procedure is to be used for classification of ceilings that are not an integral part of a floor construction and where 36 inches or more space is provided above the top of the joists or beams supporting and protected by the ceiling.

(b) **Size of sample.** The area exposed to fire shall be not less than 180 square feet, with neither dimension less than 12 feet, and the ceiling surface at its edges shall be in contact with the test furnace structure.

(c) **Test construction and enclosure.** The test ceiling construction shall include all structural members and details including hangers, if any, but not walkways. Above the ceiling during the test, there shall be provided a tight flat-topped enclosure, the underside of the covering material of which shall be 36 inches above the top of the joists or beams supporting and protected by the ceiling. The top of the enclosure shall be made of cement-asbestos board $^{1}/_{4}$ inch in thickness under asbestos millboard $^{1}/_{2}$ inch in thickness, and the side walls of 8-inch common brick, or it shall be of a construction having equivalent heat conductivity and heat capacity. Where use of the ceiling under a combustible construction is contemplated, at least five 15-inch square panels of 1-inch pine boards shall be attached to the underside of the top of the enclosure. The temperatures on the bottom surface of these panels shall be measured.

(d) **Conditions of acceptance.** The test shall be regarded as successful if the following conditions are met:

1. The ceiling shall have withstood the fire endurance test without the passage of flame or ignition of combustible members or materials forming part of the construction above the ceilings as evidenced by glow or flame.

2. Transmission of heat through the ceiling during the fire endurance test shall not have been such as to raise the average temperature above the test ceiling more than indicated in Items A, B and C. The limiting temperatures shall be the average of those taken at not less than five points, one of which shall be approximately at the center, and four at approximately the centers of the quarter sections.

   A. With combustible supports or other combustible material in contact with the ceiling, the temperature increase at the points of contact shall not exceed 250°F.

   B. With combustible supports or other combustible material not in contact with the ceiling, the temperature increase on the surface of any combustible members, pine panels, or combustible material adjacent to the ceiling shall not exceed 250°F. The temperature on the exposed surface of combustible members not in contact with the ceiling shall be measured under a sheet of mica approximately 0.002 inch in thickness.

   C. With no combustible material above the ceiling construction, the average temperature measured on the lower surface of the main structural supporting members (beams or slabs) shall not exceed 1200°F and the average temperature of the top and bottom of the beams, when used, shall not exceed 1000°F.

TESTS OF PROTECTION FOR COMBUSTIBLE
FRAMING, OR FOR COMBUSTIBLE FACINGS
ON THE UNEXPOSED SIDE OF WALLS,
PARTITIONS AND FLOORS

Sec. 12-7-114.

(a) **Character of sample.** Test panels carrying wall, partition or floor protection shall be finished with the protections which are the subject of the test, except that where the finish on the unexposed side is not the subject of the test and is not specifically indicated, the testing laboratory shall apply a finish judged suitable for the purpose. In case a floor construction, as installed for actual use, is to have no finish on the unexposed side, it shall be so tested.

(b) **Size of sample.** The area exposed to fire shall be, for tests of wall and partition protection, not less than 100 square feet with neither dimension less than 9 feet; for tests of floor protection, not less than 180 square feet with neither dimension less than 12 feet.

(c) **Conditions of acceptance.** The test shall be regarded as successful if the following conditions are met:

1. The protection shall have withstood the fire endurance test, without ignition of the materials protected, for a period equal to that for which classification is desired.

2. Transmission of heat through the protection during the fire endurance test shall not have been such as to raise the temperatures at its contact with the protected structural members or facings of the test panel more than 250°F (130°C) above the initial temperatures at these points, except that for members closely embedded on three sides in masonry, concrete or similar noncombustible materials the permissible temperature rise may be 325°F (181°C).

STANDARD FIRE ENDURANCE
TEST REPORT FORM

Sec. 12-7-115.
Reports of fire endurance tests specified in Section 12-7-103 shall include all data and in the form prescribed in this section.

(a) **Cover page.** Cover page shall include: Laboratory, Laboratory Project Number, Sponsor and Date Tested.

(b) **Title page.** Title page shall include: Table of Contents, Summary of Construction and Fire Endurance Time. The signature of the fire-protection engineer responsible for the conduct of the test may be on the title page or at the conclusion of the report.

(c) **Test facility.** A complete description and details of the furnace and recording equipment shall be provided. This may be in an appendix to the report.

1. Describe details of end conditions (wedges, bearing, means to prevent rotation), describe details of the restraining frame, degree of restraint or reactive forces opposing expansion and the method used to provide this restraint.

2. If construction is tested under load, indicate how load is applied and controlled (include loading diagram).

3. If construction is tested as nonload bearing indicate whether frame is rigid or moves in test.

(d) **Description of materials.** Type, size, class, strength, densities, trade name and any additional data necessary to fully define and identify materials. The testing laboratory shall indicate whether materials meet ASTM standards by markings, or by statement of sponsor, or by physical or chemical test by the testing laboratory. The sponsor shall authorize the testing laboratory to provide all data to the enforcing agency as may be necessary for evaluation.

(e) **Description of test assembly.**

1. Give size of test specimen including dimensions of all parts.

2. Give details of structural design, including safety factor of all structural members in the test assembly.

3. Include plan, elevation, principal cross section, plus other sections as needed for clarity. Detailed drawing of complete assembly.

4. Give details of attachment of test panel in frame.

5. Give location of thermocouples, deflection points and other items for test.

6. Describe general ambient conditions at:

   A. Time of construction;

   B. During curing (time from construction to test); and

   C. Time of test.

7. Record air movement across unexposed face of test specimen.

8. Report relative humidity in specimen.

(f) **Description of test.**

1. Except as provided in Section 12-7-102 (d), report temperatures at beginning and every five minutes. If charts are included in report, clearly indicate time and Fahrenheit temperature:

   A. In furnace space.

   B. On unexposed face for each thermocouple.

   C. On protected framing members as stipulated in test method. In combustible assemblies indicate temperatures on framing back of protection, soffit of joists or other framing members.

   D. On request of the enforcement agency, furnish the temperatures in the plenum at mid-depth of ceiling-floor assemblies and underside of floor.

2. Report deflections every 5 minutes for first 15 minutes, and last hour of test. Every 10 minutes in between.

3. Report appearance of exposed face:

   A. Every 15 minutes;

   B. At any noticeable development, give details and time, i.e., cracks, buckling, twisting, expansion of supports, flaming, smoke, loss of material, etc.; and

   C. At end of test include amount of drop out, condition of fasteners, sag, etc.

4. Report appearance of the unexposed face:

   A. Every 15 minutes;

   B. At any noticeable development including cracking, smoking, buckling, giving details and time; and

   C. At end of test.

5. Report time of failure by:

   A. Temperature rise;

   B. Failure to carry load; and

   C. Passage of flame-heat-smoke.

6. If hose stream is required, repeat necessary parts of Items 3 and 5. If failure occurs in hose stream test, describe.

(g) **Comments by testing engineer.**

1. Included shall be a statement concerning construction being representative of field construction. If construction does not represent typical field construction, all deviations shall be noted.

2. If construction is unsymmetrical, clearly indicate face exposed to fire.

3. Fire test.

(h) **Summary of results.** Shall include:

1. Endurance time.

2. Nature of failure.

3. Hose stream results.

(i) **Pictures.** Pictures shall be provided as necessary to clarify and show what cannot be covered in the report. Pictures shall include:

1. Assembly in construction with closeups of details supplementing the report.

2. Exposed face prior to test.

3. Unexposed face at start of endurance test.

4. Unexposed face at end of fire endurance test.

5. Exposed face at end of fire endurance test.

6. If hose stream test is required, repeat Items 1 through 5.

TABLE SFM 12-7-1A
CONDITIONS FOR HOSE STREAM TEST

	WATER PRESSURE AT BASE OF NOZZLE (POUNDS PER SQUARE INCH)	DURATION OF APPLICATION, MINUTES PER 100 SQUARE FEET OF EXPOSED AREA
4 hours, and over	45	5
2 hours, and over, if less than 4	30	$2^1/_2$
$1^1/_2$ hours, and over, if less than 2	30	$1^1/_2$
1 hour, and over, if less than $1^1/_2$	30	1
Less than 1 hour, if desired	30	1

CHAPTER 12-7-2
FIRE-RESISTIVE STANDARDS

Reserved

CHAPTER 12-7-3
FIRE-RESISTIVE STANDARDS

FIRE TESTING FURNACES
STANDARD 12-7-3

STATE FIRE MARSHAL

SCOPE

Sec. 12-7-300.
This standard sets forth the general requirements for the design and control of fire testing furnaces intended for fire exposure testing and assignment of fire endurance ratings of building materials, assemblies of building materials, equipment and devices.

Furnace design and dimensions

Sec. 12-7-301.
Furnaces shall consist of a furnace chamber and an insulated specimen frame. The furnace chamber walls and floor shall consist of insulating fire brick or equivalent heat-reflective materials. Furnace dimensions shall be not less than shown in the following:

(a) **Vertical large-scale wall furnace.** The furnace exposure panel or door shall consist of an insulated steel restraining frame having an available opening for the test sample of not less than 200 square feet in area with neither dimension less than 9 feet.

(b) **Vertical half-scale wall furnace.** The furnace exposure panel or door shall consist of an insulated steel restraining frame having an available opening of not less than 50 square feet for the test sample. Neither dimension of the furnace opening shall be less than 7 feet.

(c) **Horizontal large-scale floor furnace.** The furnace exposure panel shall consist of an insulated steel restraining frame having an available opening of not less than 180 square feet for the test sample. Neither dimension of the furnace opening shall be less than 12 feet.

(d) **Horizontal small-scale furnace.** The furnace exposure panel shall consist of an insulated frame having an available opening of not less than 35 square feet for the test sample. Neither dimension of the furnace opening shall be less than 5 feet.

(e) **Horizontal large-scale beam furnace.** The furnace exposure panel shall consist of an insulated steel restraining frame having an available opening of not less than 180 square feet for the test sample. Neither dimension of the furnace opening shall be less than 5 feet.

(f) **Horizontal small-scale beam furnace.** The furnace exposure panel for the “Alternate Test of Protection for Structural Steel Beams, Girders and Trusses” shall consist of an insulated

steel frame having an available opening of not less than 35 square feet for the test sample. Neither dimension of the furnace opening shall be less than 5 feet.

(g) **Column furnace.** The column furnace shall be of such dimensions as to provide an opening for column sections not less than 8 feet in clear length.

(h) **Protection of equipment and test specimen.** The testing furnaces, equipment and test specimen undergoing the fire test shall be protected from any condition of wind or weather, that might lead to abnormal results. The ambient air temperature of the testing room at the beginning of the test shall be within the range of 50°F to 90°F (10°C to 32°C).Velocity of air across the unexposed face of the test specimen shall not exceed 4.4 feet per second, as determined by an anemometer placed at right angles to the unexposed surface, measured before or during the test. If mechanical ventilation is employed during the test, an airstream shall not be directed across the surface of the specimen.

BURNERS AND FUEL

Sec. 12-7-302.

(a) **Burners.**

1. In vertical furnaces, burners shall be placed in the back wall of the furnace. The location of the burners and provisions for combustion air shall be such as to provide an even flame exposure to the entire exposed face of the test specimen. Combustion air openings shall be provided in such a manner as to normally prevent induction of combustion air through any opening in the test specimen.

2. In horizontal furnaces, burners shall be placed in the floor or side walls. Burrs and the provisions for combustion air shall be so arranged as to provide a uniform exposure to the entire exposed face of the test specimen.

3. In column furnaces, burners shall be placed in the four walls to provide an even luminous flame exposure to all sides of the test sample.

(b) **Fuel.** Furnaces shall be supplied with natural, manufactured or bottled gas.

TIME-TEMPERATURE CURVE

Sec. 12-7-303.
The conduct of fire tests of materials, assemblies, methods of construction, equipment and devices shall be controlled to conform to the applicable portion of the standard time-temperature curve shown in Figure 12-7-3-1. The points on the curve that determine its character are:

1000°F (538°C)	at	5 minutes
1300°F (704°C)	at	10 minutes
1500°F (843°C)	at	30 minutes
1700°F (927°C)	at	1 hour
1792°F (978°C)	at	$1^{1}/_{2}$ hours

1850°F (1010°C)	at	2 hours
1925°F (1052°C)	at	3 hours
2000°F (1093°C)	at	4 hours

For a closer definition of the time-temperature curve, see Table 12-7-3A.

FURNACE CONTROL

Sec. 12-7-304.

(a) **Thermocouples.**

1. Furnace thermocouples shall be protected by sealed porcelain tubes having $^{3}/_{4}$-inch outside diameter and $^{1}/_{8}$-inch wall thickness, or, as an alternate, in the case of base-metal thermocouples, shall be protected by $^{1}/_{2}$-inch wrought steel or wrought iron pipe of standard weight or equivalent protection of approved type. The exposed length of the pyrometer tube and thermocouple in the furnace chamber shall be not less than 12 inches.

2. In the large-scale horizontal floor and vertical wall furnaces, the temperature of the fire test exposure shall be deemed to be the average temperature obtained from the readings of not less than nine thermocouples symmetrically disposed and distributed to show the temperature near all parts of the test specimen. In the vertical half scale and horizontal small-scale furnaces, the number of thermocouples shall be proportioned to those of the large-scale furnaces, but shall in no case be less than four thermocouples.

3. In the column furnace, the temperature of the fire test exposure shall be deemed to be the average temperature obtained from the readings of not less than eight thermocouples symmetrically disposed at two levels to show the temperature near all parts of the test specimen. The two levels shall be located approximately 2 feet from the top and bottom of an 8-foot clear height furnace.

4. In the vertical wall furnaces, the junction of the thermocouples shall be placed 6 inches from the exposed face of the test specimen at the beginning of the test. The junction of the thermocouples shall, during the fire test and as a result of deflection, be maintained at 6 inches from the exposed face of the test specimen.

5. In horizontal beam, floor and roof furnaces having a furnace chamber not less than 180 square feet in area, the junction of the thermocouples shall be 12 inches from the exposed face of the test specimen at the beginning of the test, and shall not touch the test specimen during the test as a result of its deflection.

6. In horizontal beam, floor and roof furnaces having a furnace chamber less than 180 square feet in area, the junction of the thermocouples shall be placed 6 inches from the exposed face of the test specimen at the beginning of the test and, during the test, shall not touch the test specimen as a result of its deflection.

(b) **Temperature recording.** The furnace temperatures shall be read at intervals not exceeding 5 minutes during the first 2 hours, and thereafter the intervals may be increased to not more than 10 minutes.

(c) **Furnace control accuracy.** The accuracy of the furnace control shall be such that the area under the time-temperature curve, obtained by averaging the results from the thermocouple readings, is within 10 percent of the corresponding area under the standard time-temperature curve for fire tests of 1 hour or less duration, within 7.5 percent for those over 1 hour and not more than 2 hours, and within 5 percent for tests exceeding 2 hours in duration. Individual thermocouple readings shall not exceed or fall below the standard time-temperature curve by more than 15 percent.

(d) **Furnace correction.** When the indicated resistance period is $^{1}/_{2}$ hour or over, determined by the average or maximum temperature rise on the unexposed surface or within the test sample, or by failure under load, a correction shall be applied for variation of the furnace exposure from that prescribed, where it will affect the classification, by multiplying the indicated period by two-thirds of the difference in area between the curve of average furnace temperature and the standard curve for the first three-fourths of the period and dividing the product by the area between the standard curve and a base line of 60°F (20°C) for the same part of the indicated period, the latter area increased by 54 Fahr-hour or 30 Cent-hour (3240 Fahr-minutes or 1800 Cent-minutes) to compensate for the thermal lag of the furnace thermocouples during the first part of the test. For fire exposure in the test higher than standard, the indicated resistance period shall be increased by the amount of the correction and be similarly decreased for fire exposure below standard.

Note: The correction can be expressed by the following formula:

$$C = \frac{21(A - AS)}{3(AS + L)}$$

where:

C	=	correction in the same units as 1
1	=	indicated fire endurance period
A	=	area under the curve of indicated average furnace temperature for the first three-fourths of the indicated period
AS	=	area under the standard furnace curve for the same part of the indicated period
L	=	lag correction in the same units as *A* and *AS* (54 Fahr-hour or 30 Cent-hour (3240 Fahr-minutes or 1800 Cent-minutes)

(e) **Furnace pressure.** The pressure in the furnace chamber during the fire test shall be maintained as nearly equal to atmospheric pressure as possible. Horizontal furnaces may be operated at a slight negative pressure sufficient to reduce haze permitting visual observation. Furnace stacks shall be equipped with dampers to facilitate maintenance of furnace pressure.

CORRELATION

Sec. 12-7-305.
Tests of specific assemblies of materials shall be conducted for correlation (or correlation factor) of furnace exposure by comparison with tests of identical assemblies and materials conducted in furnaces of “Approved Listing Agencies” which furnaces are deemed as conforming to the design and operating requirements of this standard.

Correlation tests of wall furnaces shall include tests of two assemblies, one combustible and one noncombustible.

Correlation tests of horizontal furnaces dependent on intended test specimens shall include at least one test for each type of assembly such as combustible ceiling-floor assembly, noncombustible assembly having a high thermal capacity floor for heat dissipation, noncombustible assembly having an insulating concrete floor or other type of design.

Comparison of test results shall provide evidence of equivalent exposure based on transmitted temperatures on the unexposed side, on structural framing members, on the underside of floor or roof decks, and in the plenum space.

TABLE 12-7-3A
STANDARD TIME-TEMPERATURE CURVE FOR CONTROL OF FIRE TESTS

TIME	AREA ABOVE 68°F BASE						AREA ABOVE 20°C BASE					
	TEMPERATURE											
hr.: min.	°Fahr.		°Fahr. min.		°Fahr. hr.		°Cent.		°Cent. min.		°Cent. hr.	
0:00		68		00		0		20		00		0
0:05	1	000	2	330		39		538	1	290		22
0:10	1	300	7	740		129		704	4	300		72
0:15	1	399	14	150		236		760	7	860		131
0:20	1	462	20	970		350		795	11	650		194
0:25	1	510	28	050		468		821	15	590		260
0:30	1	550	35	360		589		843	19	650		328
0:35	1	584	42	860		714		862	23	810		397
0:40	1	613	50	510		842		878	28	060		468
0:45	1	638	58	300		971		892	32	390		540
0:50	1	661	66	200	1	103		905	36	780		613
0:55	1	681	74	220	1	237		916	41	230		687
1:00	1	700	82	330	1	372		927	45	740		762
1:05	1	718	90	540	1	509		937	50	300		838
1:10	1	735	98	830	1	647		946	54	910		915
1:15	1	750	107	200	1	787		955	59	560		993
1:20	1	765	115	650	1	928		963	64	250	1	071
1:25	1	779	124	180	2	070		971	68	990	1	150
1:30	1	792	132	760	2	213		978	73	760	1	229
1:35	1	804	141	420	2	357		985	78	560	1	309
1:40	1	815	150	120	2	502		991	83	400	1	390
1:45	1	826	158	890	2	648		996	88	280	1	471
1:50	1	835	167	700	2	795	1	001	93	170	1	553
1:55	1	843	176	550	2	942	1	006	98	080	1	635
2:00	1	850	185	440	3	091	1	010	103	020	1	717

(continued)

TABLE 12-7-3A—continued
STANDARD TIME-TEMPERATURE CURVE FOR CONTROL OF FIRE TESTS

TIME	AREA ABOVE 68°F BASE						AREA ABOVE 20°C BASE					
	TEMPERATURE											
hr.: min.	°Fahr.		°Fahr. min.		°Fahr. hr.		°Cent.		°Cent. min.		°Cent. hr.	
2:10	1	862	203	330	3	389	1	017	112	960	1	882
2:20	1	875	221	330	3	689	1	024	122	960	2	049
2:30	1	888	239	400	3	991	1	031	133	040	2	217
2:40	1	900	257	720	4	295	1	038	143	180	2	386
2:50	1	912	276	110	4	602	1	045	153	390	2	556
3:00	1	925	294	610	4	910	1	052	163	670	2	728
3:10	1	938	313	250	5	221	1	059	174	030	2	900
3:20	1	950	332	000	5	533	1	066	184	450	3	074
3:30	1	962	350	890	5	848	1	072	194	940	3	249
3:40	1	975	369	890	6	165	1	079	205	500	3	425
3:50	1	988	389	030	6	484	1	086	216	130	3	602
4:00	2	000	408	280	6	805	1	093	226	820	3	780
4:10	2	012	427	670	7	128	1	100	237	590	3	960
4:20	2	025	447	180	7	453	1	107	248	430	4	140
4:30	2	038	466	810	7	780	1	114	259	340	4	322
4:40	2	050	486	560	8	110	1	121	270	310	4	505
4:50	2	062	506	450	8	441	1	128	281	360	4	689
5:00	2	075	526	450	8	774	1	135	292	470	4	874
5:10	2	088	546	580	9	110	1	142	303	660	5	061
5:20	2	100	566	840	9	447	1	149	315	910	5	248
5:30	2	112	587	220	9	787	1	156	326	240	5	437
5:40	2	125	607	730	10	129	1	163	337	630	5	627
5:50	2	138	628	360	10	473	1	170	349	090	5	818
6:00	2	150	649	120	10	819	1	177	360	620	6	010
6:10	2	162	670	000	11	167	1	184	372	230	6	204
6:20	2	175	691	010	11	517	1	191	383	900	6	398
6:30	2	188	712	140	11	869	1	198	395	640	6	594
6:40	2	200	733	400	12	223	1	204	407	450	6	791
6:50	2	212	754	780	12	580	1	211	419	330	6	989
7:00	2	225	776	290	12	938	1	218	431	270	7	188
7:10	2	238	797	920	13	299	1	225	443	290	7	388
7:20	2	250	819	680	13	661	1	232	455	380	7	590
7:30	2	262	841	560	14	026	1	239	467	540	7	792
7:40	2	275	863	570	14	393	1	246	479	760	7	996
7:50	2	288	885	700	14	762	1	253	492	060	8	201
8:00	2	300	907	960	15	133	1	260	504	420	8	407

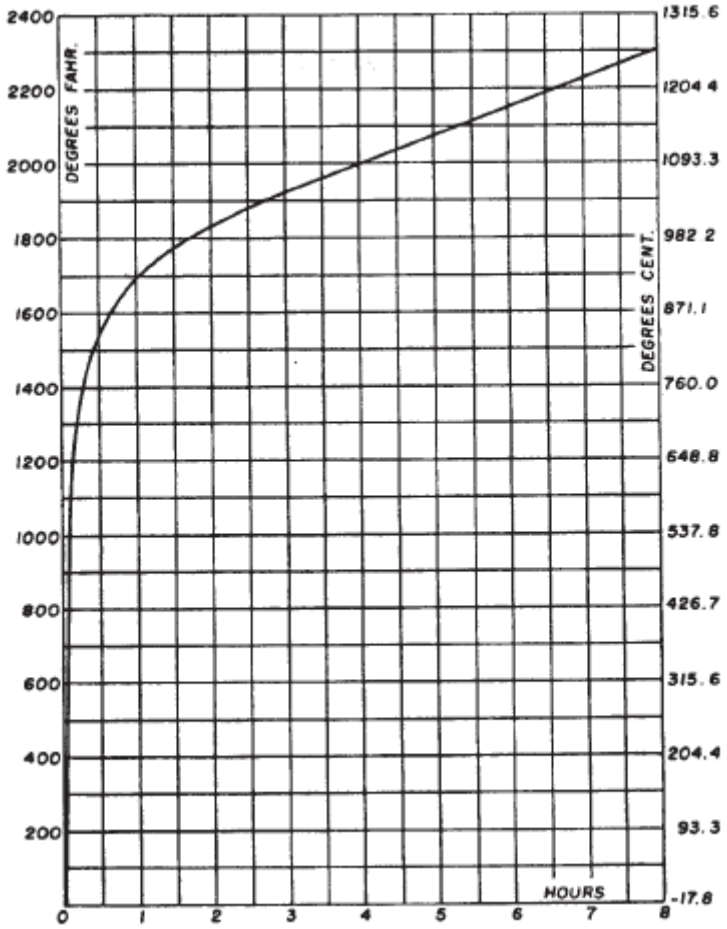

FIGURE 12-7-3-1—TIME-TEMPERATURE CURVE

CHAPTER 12-7-4
FIRE-RESISTIVE STANDARDS

FIRE DOOR ASSEMBLY TESTS
STANDARD 12-7-4

STATE FIRE MARSHAL

SCOPE

Sec. 12-7-400.

(a) **Application.** These methods of fire tests are applicable to door assemblies of various materials and types of construction for use in wall openings to retard the passage of fire (flame, heat and smoke).

(b) **Performance.** Tests made in conformity with these test methods will register performance during the test exposure, but such tests shall not be construed as determining suitability for use after exposure to fire.

(c) **Suitability of assemblies.** It is the intent that tests made in conformity with these test methods will develop data to enable enforcing agencies to determine the suitability of door assemblies for use in locations where fire resistance of a specified duration is required.

FIRE TESTING FURNACES AND CONTROL

Sec. 12-7-401.

(a) **Furnaces.** Fire testing furnaces and their control shall conform to SFM 12-7-3, Fire Testing Furnaces, Section 12-7-301 (a), Vertical Large-scale Wall Furnaces.

(b) **Half scale.** If the proposed conditions of use limit the construction to smaller dimensions, and for the evaluation of hardware intended for use on doors not exceeding 4 feet in width by7 feet 2 inches in height, fire testing furnaces conforming to Section 12-7-301 (b), Vertical Half-scale Wall Furnace, may be utilized. Constructions and hardware for ceiling access doors intended for use in fire-endurance rated ceiling-floor assemblies shall be tested in furnaces conforming to SFM 12-7-3, Section 12-7-301 (b), (d) or (f).

UNEXPOSED SURFACE TEMPERATURES

Sec. 12-7-402.

(a) **Temperatures recorded.** The unexposed surface temperatures of all fire door assemblies shall be recorded. The unexposed surface temperature shall be determined in the manner specified in Sections 12-7-402 (b), (c) and (d).

(b) **Surface temperature locations.** Unexposed surface temperatures shall be taken at not less than three points, with at least one thermocouple in each 16 square foot area of the door(s). Thermocouples shall not be located over reinforcements extending through the door, over glass panels or nearer than 12 inches from the edge of the door.

(c) **Thermocouples.** Unexposed surface temperatures shall be measured with thermocouples placed under flexible, oven-dry, felted asbestos pads of the following approximate dimensions and weight: 6 inches square, 0.40 inch in thickness, and weighing 0.026 pound. The pads shall be held firmly against the surface of the door(s) and shall fit closely about the thermocouples without breaking. The thermocouple leads shall be immersed under the pad for distance of not less than $3^{1}/_{2}$ inches, with the hot junction under the center of the pad. The thermocouple leads under the pads shall be not heavier than No. 18 B.&S. gage (0.04 inch) and shall be electrically insulated with heat-resistant and moisture-resistant coatings.

(d) **Recording interval.** Unexposed surface temperatures shall be read at the same intervals as used for the furnace temperatures, Section 12-7-304 (b).

TEST ASSEMBLIES

Sec. 12-7-403.

(a) **Construction and size.**

1. The construction and size of the test fire door assembly, consisting of single doors, doors in pairs, special purpose doors (such as dutch doors, double egress doors, etc.) or multisection doors shall be representative of that for which classification or rating is desired. The materials and construction of the door and frame, and the details of the installation, hardware, hangers, guides, trim, finish, and clearance or lap shall be recorded to ensure positive identification or duplication in all respects.

2. A floor structure shall be provided as part of the opening to be protected, except where such floor interferes with the operation of the door. The floor segment shall be of noncombustible material and shall project into the furnace approximately twice the thickness of the test door.

(b) **Mounting of doors for test purposes.**

1. Swinging doors shall be mounted so as to open into the furnace chamber, except doors in pairs swinging in opposite directions shall be mounted so as to have one door leaf open into and one door leaf open away from the furnace chamber.

2. Sliding and rolling doors, except passenger elevator shaft doors, shall be mounted on the exposed side of the opening in the wall closing the furnace chamber.

3. Passenger elevator shaft doors shall be mounted on the unexposed side of the opening in the wall closing the furnace chamber.

4. Access-type door and chute-type door and frame assemblies shall be mounted so as to have one assembly open into the furnace chamber and another assembly open

away from the furnace chamber. Ceiling access doors and frame assemblies shall be mounted in a representative ceiling with the room side of the access door opening into the furnace chamber.

5. Dumbwaiter and service counter door and frame assemblies shall be mounted on the exposed side of the opening in the wall.

6. Door frames shall be evaluated when mounted so as to have the doors open either away from or into the furnace chamber at the discretion of the enforcing agency to obtain representative information on the performance of the construction under test.

7. Surface-mounted hardware (fire exit devices) for use on fire doors shall be evaluated by being installed on one door assembly swinging into the furnace chamber and another door assembly swinging away from the furnace chamber.

8. The mounting of all doors shall be such that they fit snugly within the frame, against the wall surfaces, or in guides, but such mounting shall not prevent free and easy operation of the test door.

9. Clearances for swinging doors shall be (with a minus $^{1}/_{16}$-inch tolerance) as follows: $^{1}/_{8}$ inch along the meeting edge of doors in pairs, $^{3}/_{8}$ inch at the bottom edge of single swing doors and $^{1}/_{4}$ inch at the bottom edge of a pair of doors.

10. Clearances for horizontal sliding doors not mounted within guides (with a minus $^{1}/_{8}$-inch tolerance) shall be as follows: $^{1}/_{2}$ inch between door and wall surfaces, $^{3}/_{8}$ inch between door and floor structure and $^{1}/_{4}$ inch between the meeting edges of center parting doors. A minimum lap of 4 inches of the door over the wall opening at sides and top shall be provided.

11. Clearances for vertical sliding doors moving within guides (with a minus $^{1}/_{8}$-inch tolerance) shall be as follows: $^{1}/_{2}$ inch between door and wall surfaces along the top and/or bottom door edges with guides mounted directly to the wall surface, and $^{3}/_{16}$ inch between meeting edges of biparting doors or $^{3}/_{16}$ inch between door and floor structure or sill.

12. Clearances for passenger elevator sliding doors (with a minus $^{1}/_{8}$-inch tolerance) shall be as follows: $^{3}/_{8}$ inch between door and wall surfaces and $^{3}/_{8}$ inch between

multisection door panels. Multisection door panels shall overlap $^{3}/_{4}$ inch. Door panels shall lap the wall opening $^{3}/_{4}$ inch at the sides and top.

CONDUCT OF TESTS

Sec. 12-7-404.

(a) **Time of testing.** Masonry settings shall be allowed to dry at least three days before tests are made.

(b) **Fire endurance test.**

1. The pressure in the furnace chamber shall be maintained as nearly equal to the atmospheric pressure as possible.

2. The test shall be continued until the exposure period of the desired classification or rating is reached, unless the conditions of acceptance set forth in the appropriate paragraphs are exceeded in a shorter period.

(c) **Hose stream test.**

1. Immediately following the fire endurance test, the test assembly shall be subjected to the impact, erosion and cooling effects of a hose stream directed first at the middle and then at all parts of the exposed surface, changes in direction being made slowly.

2. The hose stream shall be delivered through a $2^{1}/_{2}$-inch hose discharging through a national standard play-pipe of corresponding size equipped with a $1^{1}/_{8}$-inch discharge tip of the standard-taper smooth-bore pattern without shoulder at the orifice. The water pressure at the base of the nozzle and duration of the application in seconds per square feet of exposed area shall be as given in Table 12-7-4A.

3. The tip of the nozzle shall be located 20 feet from and on a line normal to the center of the test door. If impossible to be so located, the nozzle may be on a line deviating not more than 30 degrees from the line normal to the center of the test door. When so located the distance from the center shall be less than 20 feet by an amount equal to 1 foot for each 10 degrees of deviation from the normal.

REPORT

Sec. 12-7-405.

1. The report shall record the construction and mounting details of the door(s) as provided in Section 12-7-403. Drawings and photographs of construction and mounting details shall be provided.

2. The results shall be reported in accordance with the performance in tests prescribed in these test methods. The report shall show the performance under the desired exposure period chosen from the following: 20 minutes, 30 minutes, 45 minutes, 1 hour, $1^1/_2$ hours or 3 hours. The report shall include the temperature measurements of the furnace, and, if determined, of the unexposed side of the test assembly. It shall also contain a record of all observations having a bearing on the performance of the test assembly.

CONDITIONS OF ACCEPTANCE

Sec. 12-7-406.

(a) **General.**

1. A door assembly shall be considered as meeting the requirements for acceptable performance when it remains in the opening during the tests specified in this standard within the limitations contained in this section for the desired endurance rating.

2. The test assembly shall have withstood the fire endurance test and hose stream test without developing openings anywhere through the assembly, except that dislodging of small fragments from the central area of the glass light shall be disregarded. The edges of the individual glass light shall remain in place.

   Exception: The hose stream test shall not be required for opposite swing double egress exit doors, and for doors of fire endurance rating of less than 45 minutes with or without approved wired glass lights.

3. Flaming on the unexposed surface of a door assembly shall not be permitted during the first 30 minutes of the classification periods. Some intermittent light flames (tongues of flame not exceeding approximately 6 inches in length) for periods not exceeding five-minute intervals are permissible along the edges of door after 30 minutes. During the last 15 minutes of the classification period the unexposed surface area of the door covered by light flaming or charring shall be contained within a distance of $1^1/_2$ inches from a vertical door edge and within 3 inches from the top edge of the door.

   Exception: On doors not subjected to the hose stream test, finished with surface veneers or crossbands and veneers, surface flaming on the unexposed surface shall not burn or char crossbands or surface veneer along the hinge or latch jamb and shall not burn or char crossbands or surface veneer down more than $^1/_2$ inch from the top edge, except that light browning without any flaming may occur at through bolts and the latch rose.

(b) **Hardware.** When hardware is to be evaluated for use on fire doors, it shall hold the door closed under the conditions of acceptance for an exposure period of three hours, and the latch bolts shall remain projected and shall be intact after the test. Builders fire door hardware shall not be equipped with any dogging device, set screw or other arrangement which can be used to prevent projection and latching of the latch bolt, locking device or locking bolt upon closing of

the door(s). The hardware need not be operable after the test. All parts essential to the latching or unlatching of fire exit hardware devices shall be constructed of materials having a solidus temperature of not less than 1000°F.

(c) **Swing doors.**

1. The movement of swing doors shall not permit any portion of the edges to move from the original position in a direction perpendicular to the plane of the door more than the thickness of the door during the first half of the classification period, nor more than $2^{7}/_{8}$ inches during the entire classification period and as a result of the hose stream.

2. The movement of swing doors mounted in pairs shall not permit any portion of the meeting edges to move more than the thickness of the door away from the adjacent door edge in a direction perpendicular to the plane of the doors during the entire classification period and as a result of the hose stream.

3. An assembly consisting of a pair of swinging doors, incorporating an astragal shall not separate in a direction parallel to the plane of the doors more than $^{3}/_{4}$ inch not equal to the throw of the latch bolt along the meeting edges.

4. An assembly consisting of a pair of swinging doors, without an overlapping astragal, for a fire and hose stream exposure of $1^{1}/_{2}$ hours or less, shall not separate along the meeting edges more than $^{3}/_{8}$ inch, including the initial clearance between doors.

5. An assembly consisting of a single swinging door shall not separate more than $^{1}/_{2}$ inch at the latch location.

6. Door frames to be evaluated with doors shall remain securely fastened to the wall on all sides and shall not cause through openings between frame and doors or between frame and adjacent wall.

(d) **Sliding doors.**

1. Doors mounted on the face of the wall shall not move from the wall sufficiently to develop a separation of more than $2^{1}/_{8}$ inches at the point of separation during the entire classification period and as a result of the hose stream.

2. Doors mounted in guides shall not release from guides and guides shall not loosen from fastenings.

3. The bottom bar of rolling steel doors shall not separate from the floor structure more than $^{3}/_{4}$ inch during the entire classification period and as a result of the hose stream.

4. The meeting edge of centerparting horizontal sliding doors and biparting vertical sliding doors shall not separate more than the door thickness in a direction perpendicular to the plane of the doors.

5. The meeting edges of centerparting horizontal sliding doors and biparting vertical sliding doors without an overlapping astragal for a fire and hose stream exposure of $1^1/_2$ hours or less shall not separate along the meeting edges more than $^3/_8$ inch, including the initial clearance between doors.

6. The meeting edges of centerparting horizontal sliding doors incorporating an astragal shall not separate in a direction parallel to the plane of the doors more than $^3/_4$ inch nor equal to the throw of the latch bolt along the meeting edges.

7. The bottom edge of service counter doors or single slide dumbwaiter doors shall not separate from the sill more than $^3/_8$ inch.

8. A resilient astragal when required for life-safety purposes shall not deteriorate sufficiently to cause through openings during the fire endurance part of the test, but small portions may be dislodged during the hose stream part of the test.

9. The lap edges of passenger elevator doors, including the lap edges of multisection doors, shall not move from the wall or adjacent panel surfaces sufficiently to develop a separation of more than $2^7/_8$ inches at the point of separation during the entire classification period and as a result of the hose stream.

10. The meeting edges of centerparting passenger elevator door assemblies, for a fire and hose stream exposure of $1^1/_2$ hours or less, shall not move apart more than $1^1/_4$ inches as measured in any horizontal plane during the entire classification period and as a result of the hose stream.

MARKING

Sec. 12-7-407.

(a) **Label.** Fire assemblies shall bear a label issued by an approved listing agency or a label approved by the State Fire Marshal showing the fire-protection rating of the assembly.

(b) **Label markings.** The markings on the labels approved by the State Fire Marshal shall include the following:

1. Name and address of the listee.

2. Model number or identification of the assembly.

3. Serial number assigned by the listing agency or file number assigned by the State Fire Marshal.

4. Rating of 3, $1^1/_3$, 1, $^3/_4$, $^1/_2$ or $^1/_3$ hour indicating duration of exposure to fire.

5. Letter A, B, C, D or E following the hourly rating designating the location for which the assembly is designed.

6. Temperature rise on the unexposed fact at the end of 30 minutes. Temperature rise classification shall be 250°F max., 450°F max., 650°F max. or no reference on the label to temperature rise denoting a temperature rise on the unexposed surface in excess of 650°F at the end of 30 minutes.

(c) **Glass lights.** All doors with glass vision panels of 100 square inches or less in area carry the same temperature rating as the door without glass lights. All doors with glass lights in excess of 100 square inches are rated as having a surface temperature in excess of 650°F max., at the end of 30 minutes.

TABLE 12-7-4A
HOSE STREAM TEST

DESIRED RATING	WATER PRESSURE AT BASE OF NOZZLE, POUNDS PER SQUARE INCH	DURATION OF APPLICATION, SECONDS PER SQUARE FOOT EXPOSED AREA
3 hours	45	3
$1^1/_2$ hours and over if less than 3 hours	30	1.5
1 hour and over if less than $1^1/_2$ hours	30	0.9
Less than 1 hour	30	0.6

CHAPTER 12-7-5
FIRE-RESISTIVE STANDARDS

Interior Finish of Decorative Material
STANDARD 12-7-5

STATE FIRE MARSHAL

SCOPE

Sec. 12-7-500.
These requirements and methods of test apply to unframed and framed rigid construction.

TEST SETUP AND PERFORMANCE

Section 12-7-501

(a) **Unframed Rigid Combustible Decorative Material.** Rigid combustible decorative material and assemblies of materials not more than $^{1}/_{4}$ inch in thickness used for folding doors, room dividers, decorative screens and similar applications, which do not create concealed spaces and which are installed with exposed edges, shall be flame resistant in accordance with the following:

1. Test specimen shall be 12 inches wide and 24 inches long. Four specimens shall be tested, two in each direction of the material.

2. The specimen shall be suspended vertically with its lower edge 2 inches above the top of a $^{3}/_{8}$ inch diameter Bunsen Burner. The test shall be performed in a draft-free area.

3. The flames from the burner shall be 4 inches long and shall be adjusted with sufficient air supply to eliminate any yellow flame tips but without any distinct inner blue cone.

4. The specimen shall be exposed to the flame at each corner and at not less than one other point along the lower edge. Each exposure shall be of sufficient duration to determine if the material will ignite and continue to burn, but shall be not less than 20 seconds.

5. The criteria for acceptance shall be as follows:

   (A) There shall be not more than intermittent flaming appreciably beyond the area exposed to the test flame.

   (B) Flame shall not reach the top of the specimen.

   (C) On removing the test flame there shall be not more than one second of after flaming except there may be nonprogressive flaming of short duration in areas of accumulated char which were directly exposed to the test flame.

Section 12-7-502

(a) **Framed Rigid Combustible Decorative Material.** Rigid combustible decorative material and assemblies of materials not more than $^{1}/_{4}$ inch in thickness used for folding doors, room dividers, decorative screens and similar applications, and which are installed with all edges protected, shall conform to the following:

1. All exposed edges shall be protected with frames of metal or other noncombustible material, or solid wood of minimum $^{1}/_{4}$-inch dimension.

2. The total square foot area of the material shall not exceed ten percent of that of the floor area of the room in which the material is installed.

3. When tested as follows, flames shall not reach the top edge of the specimen.

   The test shall be conducted in a draft free area, on a specimen of the material 12 inches by 12 inches suspended at a 45-degree angle from the horizontal with the upper and lower edges in a horizontal plane. The test flame shall be 3 inches long from a bunsen burner of approximately $^{1}/_{2}$-inch inside diameter with the air supply completely shut off. The burner shall be positioned so that its top is 1 inch vertically below a point on the lower surface of the test specimen, 1 inch up from its lower horizontal edge, and midway between the inclined edges. The exposure to the test flame and the duration of test shall be for a period of 2 minutes.

CHAPTER 12-7A
MATERIALS AND CONSTRUCTION METHODS FOR EXTERIOR WILDFIRE EXPOSURE

EXTERIOR WALL SIDING AND SHEATHING
SFM STANDARD 12-7A-1

12-7A-1.1 Application.
The minimum design, construction and performance standards set forth herein for exterior wall siding and sheathing are those deemed necessary to establish conformance to the provisions of these regulations. Materials and assemblies that meet the performance criteria of this standard are acceptable for use as defined in *California Building Standards Code*.

12-7A-1.2 Scope.
This standard evaluates the performance of exterior walls of structures when exposed to direct flames.

12-7A-1.3 Referenced documents.

1. ASTM E 2257, Test Method for Room Fire Test of Wall and Ceiling Materials and Assemblies.

2. ASTM D 4442, Test Methods for Direct Moisture Content Measurement of Wood and Wood-Base Materials.

3. ASTM D 4444, Test Methods for Use and Calibration of Hand-Held Moisture Meters.

4. California Building Code, Chapter 7A.

12-7A-1.4 Definitions.

1. **Siding (cladding)**. Any material that constitutes the exposed exterior covering of an exterior wall and is applied over sheathing or is directly attached to the wall structural system.

2. **Sheathing.** The material placed on an exterior wall beneath cladding or siding and is directly attached to the wall structural system.

12-7A-1.5 Summary of test method.

1. **Direct flame exposure.** This test method provides for the direct flame exposure of a wall specimen to a flame source centered at the base of a 4-foot by 8-foot (1220 mm by 2440 mm) test assembly.

2. **Gas burner.** The method employs a gas burner to produce a diffusion flame in contact with the test wall assembly.

3. **Heat output.** The gas burner produces a prescribed net rate of heat output of 8535 Btu/min (150 kW) for a period of 10 minutes, after which the flame exposure is terminated.

4. **Resistance to fire penetration.** The test method measures the ability of the wall system to resist fire penetration from the exterior to the unexposed side of the test assembly under the conditions of exposure. Observations are made for the appearance of sustained flaming or glow on the unexposed side and/or sustained glowing on the unexposed side at the end of a 60-minute observation period.

12-7A-1.6 Equipment.
Unless otherwise noted, dimensions in the following descriptions shall be followed with a tolerance of ± 0.5 inch (13 mm).

1. **Wall assembly holding fixture.** The test specimen support assembly shown in Figure 1 is designed to permit rapid installation and removal of wall assemblies, and to prevent edge penetration of fire at the margins of the wall assembly. It includes a sturdy frame assembly to hold the specimen and a simulated soffit that is noncombustible. The frame assembly permits a 4-foot by 8-foot (1220 mm by 2440 mm) prefabricated wall section to be inserted and to be sealed in such a way that protects the edges from fire. Side shields are situated near the vertical edges and to within 12 inches (304 mm) of the top of the test wall assembly as shown in Figure 1 to aid in minimizing extraneous drafts to the surface of the assembly.

2. **Burner.**

   2.1 **Burner details.** The ignition source for the test shall be a gas diffusion burner with a nominal 4-inch-wide by 39-inch-long (100 mm wide by 1000 mm long) porous top surface of a refractory material, as shown in Figure 2. With the exception of top surface dimensions, the essential configuration of the burner is comparable to the burner design described in ASTM E 2257. The burner enclosure shall be positioned so that it is centered relative to the width of the test wall. The distance from the bottom of the test specimen to the top surface of the burner shall be 12 inches ± 2 inches (300 mm ± 50 mm). The bottom of the test specimen shall be protected from burner fire exposure by the placement of a 4-foot-wide (1220-mm) thermal barrier consisting of nominal 0.75 inch (19 mm) cement board (or equivalent) between the burner enclosure and the test specimen. The burner enclosure shall be in contact with the protective barrier. The thermal barrier shall be positioned so that the top edge extends 3 inch ± 1 inch (76 mm ± 25 mm) above the top edge of the burner, and fastened to the base of the wall in such a manner to prevent obstruction of the burner flame caused by distortion away from the surface of the wall. Any gaps between the top edge of the thermal barrier and the test wall surface shall be filled with ceramic wool, or equivalent, prior to the test.

Natural gas, methane or propane shall be supplied to the burner through a metered control system. The gas supply to the burner shall produce a net heat output of 8535 ± 454 Btu/min (150 ± 8 kW) throughout the flame exposure.

The burner shall be ignited by a pilot burner or a remotely controlled spark igniter.

2.2. **Burner output verification.** The gas supply to the burner shall be the same as used for testing.

1. Without a test specimen in the apparatus, place the gas burner in the configuration to be used for testing and obtain a heat release rate value of 150 kW.

2. Take measurements at least once every 6 seconds and start 1 minute prior to ignition of the burner. Determine the average heat output over a period of at least 1 minute by the oxygen consumption method, or calculate the heat output from the gas mass flow and the net heat of combustion.

3. Perform verification prior to each day of testing.

12-7A-1.7 Test assembly.

1. **Dimensions.** The test specimen's dimensions shall be 4 feet wide by 8 feet high (1220 mm by 2440 mm). The test specimen shall be representative of the end-use wall assembly except as specified in Items 3 and 4. The test specimen shall be mounted in the steel frame holding fixture assembly as shown in Figure 1.

2. **Joint details.** The test specimen shall incorporate joint detail(s) representative of actual installation.

3. **Wall assemblies without internal cavity spaces.** For wall assemblies without internal cavity spaces, the entire wall assembly shall constitute the test specimen to be tested. The wall assembly shall be constructed in accordance with manufacturer's specifications and/or building code requirements, where applicable. Other components of the wall assembly, such as building felt and sheathing, are employed to conform to the manufacturer's specifications and/or building codes.

4. **Wall assemblies with internal cavity spaces.** For wall assemblies with internal cavity spaces, the materials on what would be considered the interior (unexposed) side of the wall assembly shall be omitted from the test specimen. Materials such as insulation normally installed within the cavity space shall be omitted from the test specimen. The wall assembly used as the test specimen shall include the structural support elements and any sheathing, weather barrier and cladding attached to the exterior surface of the structural support elements.

5. **Layered materials.** For wall assemblies composed of layered materials, such as sheathing, siding (cladding) and underlayment, the installation of such layered materials shall be in accordance with the manufacturer's instructions, or in the absence of such

instructions, applicable building code requirements. In the absence of manufacturer's specifications, the wall assembly shall include the following minimum components: nominal 2 x 4 studs spaced 16 inches (410 mm) on center, and the desired exterior siding material. If sheathing is used, tests shall be run on typical $^{7}/_{16}$-inch oriented strandboard (OSB) of Exposure 1 rating. Where specified by the manufacturer, sheathing material and installation shall be in accordance with the manufacturer's instructions. The sheathing shall have one vertical seam on a selected stud with a 0.125 inch (3 mm) gap.

6. **Edge protection.** Protect the vertical and horizontal edges of the test specimen with 12-mm-thick ceramic wool blanket (or equivalent) to eliminate the gap between the holder and the test specimen and prevent unwanted edge effects caused by heat transfer to the edges of the test specimen through the sample holder.

7. **Replicates.** Three matched test specimen assemblies shall be tested.

8. **Pre-test conditioning of test specimens.** The completed test specimens are to be stored indoors at temperatures not lower than 60°F (16°C) nor higher than 90°F (32°C) for the period of time necessary to cure or condition the assembly components. Test specimens are to be stored so that each will be surrounded by freely circulating air. Pieces of any hygroscopic materials from the same stock from which the test specimen was constructed shall be tacked to the specimen during construction in such a manner that they are easily removed. These pieces shall be conditioned with the completed specimens. Prior to testing, the pieces of hygroscopic materials shall be tested for moisture content.

   8.1. Make the moisture determination on two samples from each piece and report the average. For lumber and other wood-based materials, use Test Methods D 4442. Use of an appropriately calibrated moisture meter, as described in Test Methods D 4444, to determine the moisture content of wood or wood products is also permitted. For other hygroscopic materials, use test methods appropriate for those materials.

   8.2. For lumber used in the construction of the supporting wall structure, the moisture content shall not be more than 12 percent. For wood sheathing, the moisture content shall not exceed 8 percent. For other hygroscopic materials, the moisture shall be within ranges specified by the manufacturer before the assembly is constructed. These specified ranges shall be typical for exposure at 77 ± 9°F [25 ± 5°C] and 55 ± 10 % relative humidity.

12-7A-1.8 Weathering.
Weathering of materials shall be in accordance with California Building Code Section 703A Standards of Quality.

12-7A-1.9 Conduct of tests.

1. **Test room environment.** The ambient temperature in the test room shall be above 60°F (15°C) and the relative humidity shall be less than 75 percent. The test room shall be

draft-protected and equipped with an exhaust hood system for removal of products of combustion during testing.

2. **Airflow.** The horizontal airflow, measured at a horizontal distance of 20 inches (0.5 m) from the edge of the wall assembly, shall not exceed 1.64 ft/s (0.5 m/s).

3. **Placement of test frame.** Prior to testing, and without the test specimen in place, position the frame assembly under the exhaust hood and set the gas burner for the prescribed level of output.

4. **Placement of specimen.** Once the burner output is verified, position the specimen holder assembly at the desired test location under the collection hood.

5. **Test specimen.** Insert the test specimen into the frame assembly, sealing all edges with ceramic wool.

6. **Ignition.** Simultaneously ignite the gas burner and start the timer marking the beginning of the test. Control the burner to a constant 150 ± 8 kW output. Control the hood duct flow to collect all products of combustion.

7. **Flame exposure.** Continue the flame exposure until flame penetration of the test specimen and sustained flaming on the unexposed side occurs or for a period of 10 minutes, then extinguish the burner.

8. **Observation.** If sustained flaming on the unexposed side of the test specimen has not occurred, observe the unexposed side of the test specimen for an additional 60 minutes for evidence of sustained flaming or glowing combustion on the unexposed side. Terminate the observation prior to the completion of the 60-minute observation period if all evidence of flame, glow and smoke has disappeared.

   Note: An infrared thermometer has been found to be useful to detect the increase of temperature on the unexposed side of the test assembly.

9. **Documentation.** Perform photographic and/or video documentation before, during and after each test.

12-7A-1.10 Report.
The report shall include the following:

1. Name and address of the testing laboratory.

2. Name and address of test sponsor.

3. Description of the test specimen including construction details of the wall system, including details of individual components (such as type, thickness, and installation method of any sheathing) and the manufacturer's installation details and limitations as applicable.

4. Number of specimens tested.

5. Description of weathering, as applicable.

6. Moisture content of hygroscopic elements of wall system construction at the time of testing.

7. Details of the burner verification, including heat supply rate.

8. Date of test, test identification number and date of report.

9. The test results shall include:

    9.1. A notation of the time and location of sustained flaming on the unexposed side of the test specimen during the test, along with the sequence number of the test specimen.

    9.2. A determination of the presence of glow on the unexposed side of the test specimen at the end of the 60-minute observation period.

    9.3. Observations of the burning characteristics of the exposed surface of the test wall during and after the flame exposure.

12-7A-1.11 Conditions of Acceptance.
Should one of the three replicates fail to meet the Conditions of Acceptance, three additional tests may be run. All of the additional tests must meet the Conditions of Acceptance.

1. Absence of flame penetration through the wall assembly at any time.

2. Absence of evidence of glowing combustion on the interior surface of the assembly at the end of the 70-minute test.

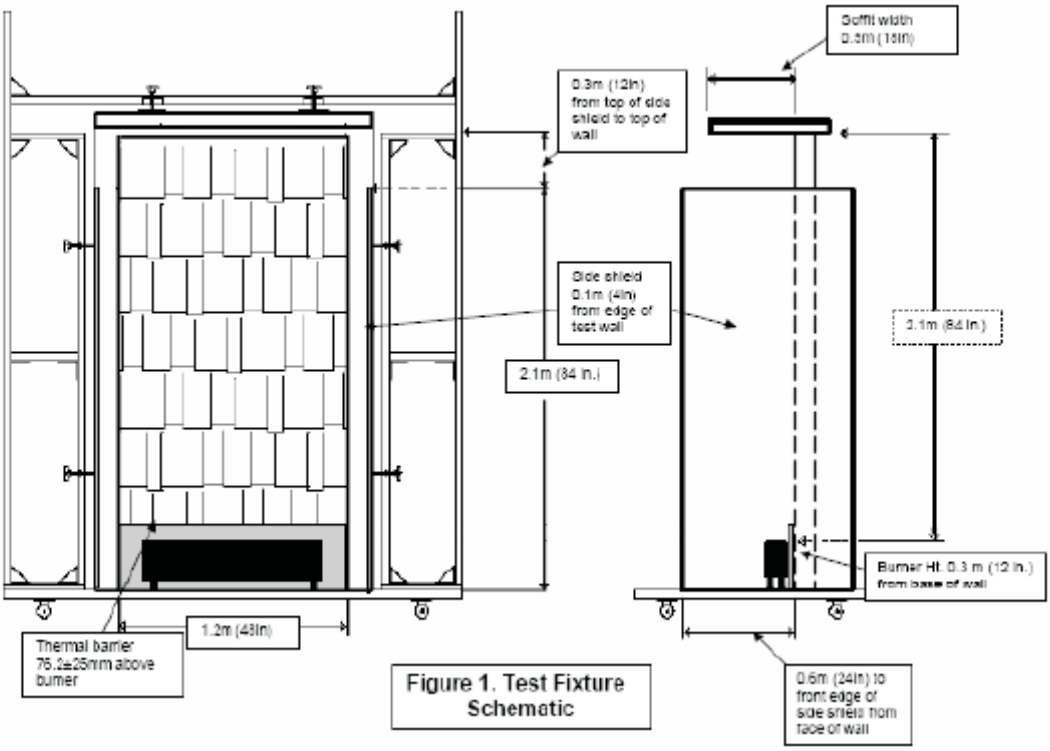

FIGURE 1. TEST FIGURE SCHEMATIC

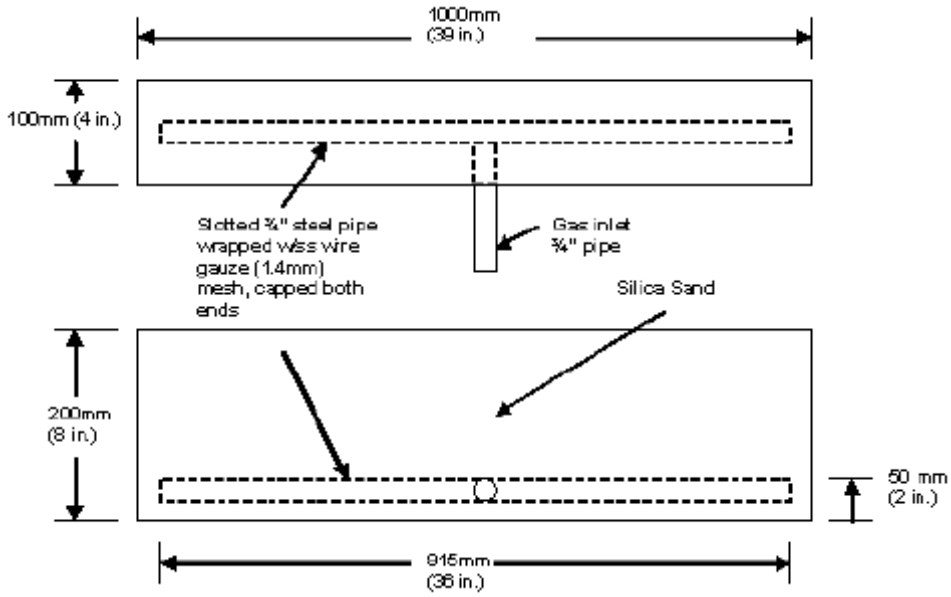

FIGURE 2. GAS BURNER IGNITION SOURCE

EXTERIOR WINDOWS
SFM STANDARD 12-7A-2

12-7A-2.1 Application.
Exterior window assemblies that meet the performance criteria of this standard are acceptable for use as defined in the California Building Standards Code.

12-7A-2.2 Scope.
This standard evaluates the performance of exterior windows used in structures when exposed to direct flames.

12-7A-2.3 Referenced documents.

1. AAMA (for definitions) Training Manual, Residential & Light Commercial Window and Door Installation Training and Registration Program.

2. CAWM 400-95, Standard Practice for Installation of Windows with Integral Mounting Flange in Wood Frame Construction.

12-7A-2.4 Definitions.

1. **Frame (Jambs).** This usually consists of two vertical members (side jambs) and two horizontal members (head and sill) that hold the sash. Frames and sash are typically made of steel, aluminum, vinyl, fiberglass, wood or a combination of these materials.

2. **Glazing.** The glass in a window. It may include layers of plastic as well as glass.

3. **Sash.** The fixed or movable parts of the window in which the panes of glass are set.

12-7A-2.5 Test apparatus.

1. **Wall assembly test module.** The module is designed to permit rapid installation and removal of window/wall assemblies, and is designed to prevent edge penetration of fire at the margins. It includes two noncombustible side walls attached to a wall frame assembly, and a simulated soffit that is also noncombustible. The assembly permits a prefabricated 4 × 8 ft (1.2 × 2.4 m) wall section containing the test window to be inserted from the rear and sealed in such a way that the edges are protected from fire (see Figure 1).

2. **Burner.** A 4 × 39 inch (100 × 1000 mm) diffusion burner shall be used. Natural gas, methane or propane shall be supplied to the burner through a metered control system. The gas supply to the burner shall produce a net heat output of 150 ± 4 kW throughout the flame exposure. Burner output can be determined from HRR or calculated from the gas flow rate, temperature, and pressure.

3. **Burner location.** The burner shall be positioned so that it is centered relative to the width of the wall assembly and against the wall. The distance from the floor to the top of the burner shall be 12 inches (300 mm).

12-7A-2.6 Test assembly.

1. **Window.** The window width cannot exceed 3 feet (900 mm) due to the limitations of the test fixture. The burner's flame shall cover the full width of the window sill. The distance from top of the burner to bottom of window will be 8 inches (200 mm).

   Note: Larger windows may be tested by expanding the size of the rear wall of the Wall Assembly Test Module.

2. **Materials.** In the absence of the window manufacturer's specifications, the wall assembly shall include the following minimum components:

   2.1. 2 by 4 inch studs spaced 16 inches (410 mm) on center, framed out to incorporate a rough opening sized to receive the test window such that the window is centered relative to the width of the wall;

   2.2. Gypsum board for mounting around the window once it is installed;

   2.3. Pieces of gypsum cut into narrow strips for use as trim around the window;

   2.4. Caulk to be used as per the window manufacturer's instructions.

3. **Wall assembly.** A noncombustible wall shall be used with a manufacturer or code-specified opening for the particular window. Install window in framed rough opening following manufacturer guidelines. Apply manufacturer-recommended caulk to nailing flange prior to installation. Use narrow strips of gypsum board as trim around window, covering the nail flange of the window. Any type of framing material may be tested.

   3.1. Fit the window test assembly into the rear wall of the Wall Assembly Test Module, sealing all edges, including the soffit-to-wall joint. Ceramic wool or comparable material shall be used for sealing.

12-7A-2.7 Conduct of tests.

1. **Burner output verification.** Without the window in place, set the burner for 150 kW output. Conduct a verification run of 3 minutes to assure the heat release rate, and then turn off the burner.

2. **Test.** Place the burner against the wall assembly at the center. Ignite the burner at the 150 kW output and control during the test for constant and uniform output. Optional radiometers can be placed behind the Wall Assembly Test Module to measure heat flux through the window glass.

3. **Duration and observations.** The test shall be continued until flame-through occurs at the window. Flame-through can occur at the glass (glazing) and/or in the frame. At this point, the burner shall be extinguished and the assembly monitored for sustained combustion. Note the time elapsed and location of penetration if it occurs.

4. **Report.** Report a description of the window unit, including the types of frames, cladding and panes being tested and details of the installation. Record when and how the glass breaks or flame-through occurs in the framing materials or sash, and/or if the framing material deforms or otherwise suffers a loss of integrity such that the glass cannot be held in place, and a record of the time at which any of these events occur.

12-7A-2.8 Conditions of Acceptance.

1. **Duration of direct flame exposure.** To pass this test standard, the window and window assembly shall withstand 8 minutes of direct flame exposure with the absence of flame penetration through the window frame or pane, or structural failure of the window frame or pane.

2. **Flame penetration or structural failure.** Flame penetration or structural failure of the flame or pane anytime during the test constitutes failure of this test standard.

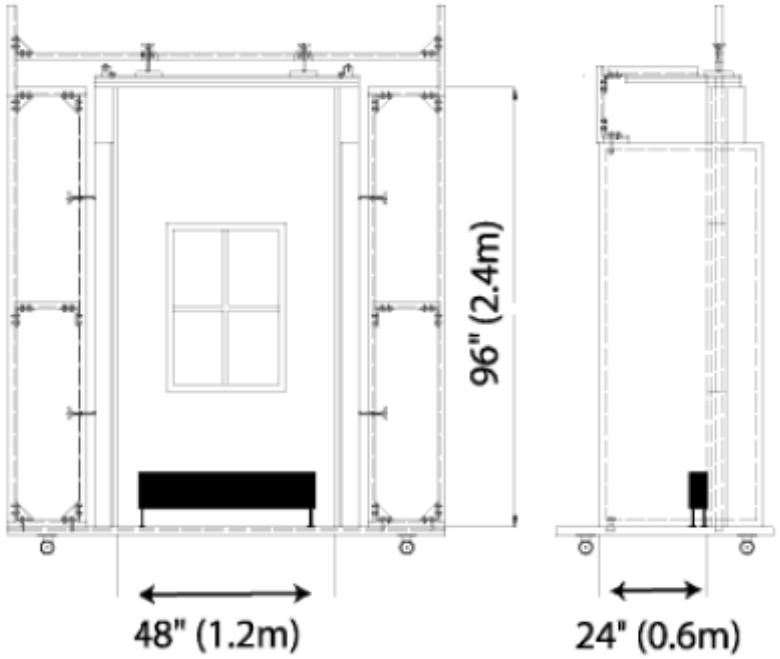

FIGURE 1. SCHEMATIC OF THE WALL ASSEMBLY
Test Module used for evaluating the fire performance of a window.

HORIZONTAL PROJECTCION UNDERSIDE
SFM STANDARD 12-7A-3

12-7A-3.1 Application.
The minimum design, construction and performance standards set forth herein for the exposed underside of horizontal projections such as the horizontal soffits of roof eaves, floor projections, and exposed underfloor areas are those deemed necessary to establish conformance to the provisions of these regulations. Materials and assemblies that meet the performance criteria of this standard are acceptable for use as defined in the California Building Standards Code.

12-7A-3.2 Scope.
This standard evaluates the fire-resistive performance of horizontal projection assemblies including the horizontal soffits of roof eaves, floor projections, and exposed underfloor areas when subjected to direct flame exposure to the underside of a horizontal projection.

12-7A-3.3 Referenced documents.

1. ASTM D 4442, Test Methods for Direct Moisture Content Measurement of Wood and Wood-Base Materials.

2. ASTM D 4444, Test Methods for Use and Calibration of Hand-Held Moisture Meters

3. *California Building Code*, Chapter 7A.

12-7A-3.4 Definitions.

1. **Eaves.** A projecting edge of a roof that extends beyond the supporting wall as in CBC 702A "Roof Eave" or similar horizontal projection assembly.

2. **Soffit.** The enclosed underside of any exterior overhanging section of a roof eave or similar horizontal projection assembly (see CBC 702A "Roof Eave Soffit").

12-7A-3.5 Equipment.

1. **Burner.** A 12 by 12-inch (300 by 300 mm) diffusion burner shall be used. Natural gas, methane or propane shall be supplied to the burner through a metered control system. The gas supply to the burner shall produce a net heat output of 300 ± 15 kW throughout the flame exposure. Burner output can be determined from HRR or calculated from the gas flow rate, temperature, and pressure.

2. **Infrared temperature analyzer** (optional). Intended for monitoring the temperature change of the inside of the eaves.

3. **Moisture** content**.** Prior to testing, all materials (lumber and soffit material) shall be conditioned to a constant weight or for a minimum of 30 days at 73 ± 4ºF (23 ± 2ºC) and 50 ± 5% relative humidity, whichever occurs first. Constant weight shall be defined as occurring when the change in test material weight is less than or equal to 2 percent in a 24-hour period. Lumber moisture content shall be between 8 and 12 percent (oven-dry basis) and sheathing shall not exceed 8 percent (oven-dry basis).

12-7A-3.6 Materials.

1. **Framing.** The materials used shall be representative of the grades that would be typical of eave construction and installed in the eave's subassembly as per accepted construction practices.

2. **Soffit.** Material selected for the test.

12-7A-3.7 Test system preparation (**Figure 1**)**.**

1. **Eaves fabrication.** The 4-foot-wide by 2-foot (1.2 m by 0.6 m) test specimen shall be constructed to fit into a 4-foot-wide (1.2 m) space at the top of the test assembly described in SFM 12-7A-1. Normal eave framing, joints in soffit material, and other typical features present in the constructed assembly shall be present in the test specimen.

2. **Test Fixture.** The test fixture shall be as described in SFM 12-7A-1, with the exception that the top soffit projection of the wall assembly fixture is modified to facilitate installation and removal of eave assemblies. Gypsum board (or equivalent) is used to create a noncombustible wall surface in the 4 x 8 ft. opening in the wall test fixture.

3. **Eaves assembly.** Fit the eave assembly into the test module so that the horizontal surface of the assembly is 84 inches (2.1 m) from the top of the burner.

4. **Moisture content.** Measure the moisture content of the wooden members of the assembly using a moisture meter (ASTM D 4444), and, for sheathing products, by methods outlined in ASTM D 4442.

5. **Sealing.** Seal the edges and ends with ceramic wool or comparable material to prevent flame penetration in these locations of the eave assembly.

12-7A-3.8 Conduct of Tests.

1. **Airflow.** The wall test shall be conducted under conditions of ambient airflow.

2. **Number of tests.** Conduct the tests on three replicate eaves assemblies.

3. **Burner output verification.** Without the eaves assembly in place, adjust the burner for 300 ± 15 kW output. Extinguish the burner.

4. **Burner** positioning. Center the burner with respect to the width of the eaves wall assembly and 0.75 inch (20 mm) from the wall. The distance from the floor to the top of the burner shall be 12 inches (300 mm).

5. **Procedure.**

   5.1 **Ignition.** Ignite the burner, controlling for a constant 300 ± 15 kW output.

   5.2 **Flame exposure.** Continue the exposure until flame penetration of the eaves occurs or for a 10-minute period.

   5.3 **Continued combustion.** If penetration does not occur, continue observation for an additional 30 minutes or until all combustion has ceased.

   Note: An infrared thermometer has been found to be useful to detect the increase of temperature on the back side of the eaves and as an aid to identify the areas of potential combustion.

6. **Observations.** Note the time, location and nature of flame penetration.

12-7A-3.9 Report.
The report shall include a description of the eaves material, details of the construction of the eaves, moisture content of the framing and wood-based soffit elements as applicable, and point of flame penetration. Provide details on the time and reasons for early termination of the test.

12-7A-3.10 Conditions of Acceptance.
Should one of the three replicates fail to meet the Conditions of Acceptance, three additional tests may be run. All of the additional tests must meet the Conditions of Acceptance.

1. Absence of flame penetration of the eaves or horizontal projection assembly at any time.

2. Absence of structural failure of the eaves or horizontal projection subassembly at any time.

3. Absence of sustained combustion of any kind at the conclusion of the 40-minute test.

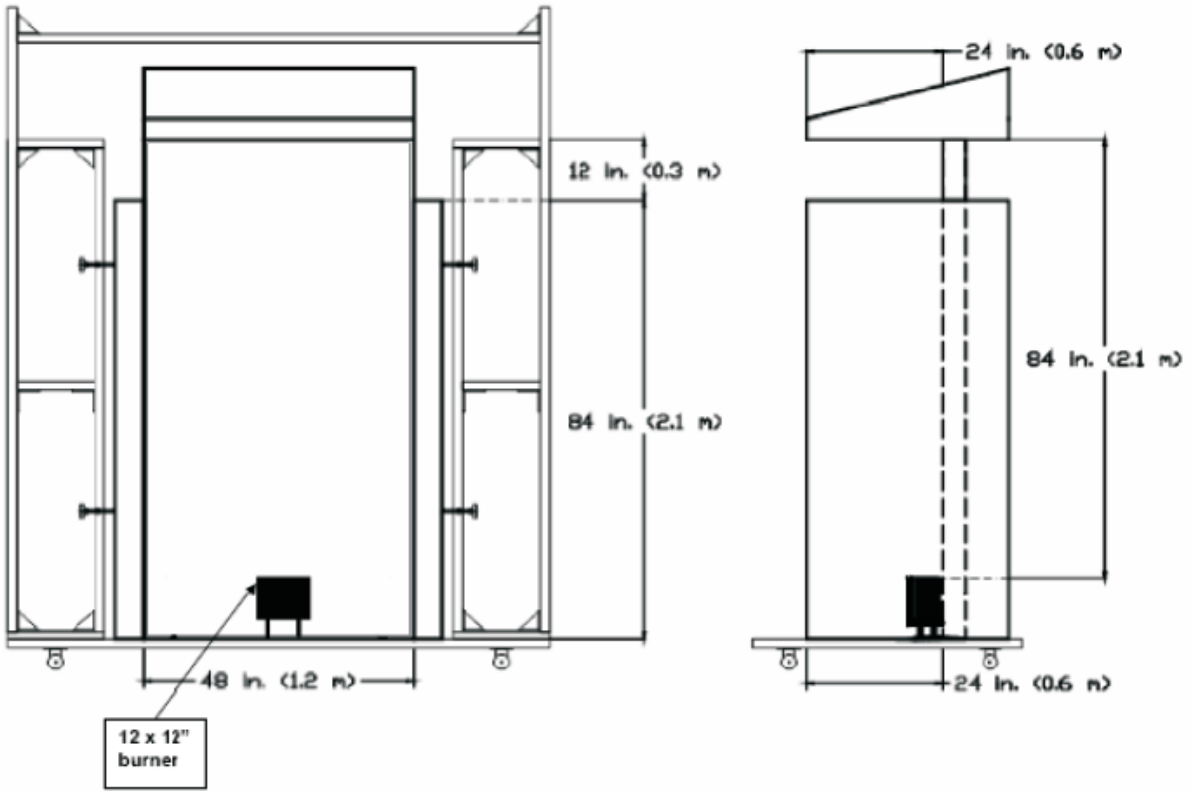

FIGURE 1. EAVES TEST ASSEMBLY

DECKING
SFM STANDARD 12-7A-4

12-7A-4.1 Application.
The minimum design, construction and performance standards set forth herein for unloaded decks are those deemed necessary to establish conformance to the provisions of these regulations. Materials and assemblies that meet the performance criteria of this standard are acceptable for use as defined in *California Building Standards Code*.

12-7A-4.2 Scope.
This standard evaluates the performance of decks (or other horizontal ancillary structures in close proximity to primary structures) when exposed to direct flames and brands. The under-deck flame exposure test is intended to determine the heat release rate (HRR) and degradation modes of deck or other horizontal boards when exposed to a burner flame simulating combustibles beneath a deck. The burning brand exposure test is intended to determine the degradation modes of deck or other horizontal boards when exposed to a burning brand on the upper surface.

12-7A-4.3 Referenced document.

1. ASTM D 4444, Test Methods for Use and Calibration of Hand-Held Moisture Meters.

2. ASTM E 108, Test Methods for Fire Tests of Roof Coverings.

3. *California Building Code*, Chapter 7A.

4. UL 790, Standard Test Methods for Fire Tests of Roof Coverings.

12-7A-4.4 Definitions.

1. **Deck boards.** Horizontal members that constitute the exposed surface of the ancillary structure.

2. **Deck surface area.** The test specimen area defined by the overall specimen length and width after assembly.

3. **Heat release rate.** The net rate of energy release as measured by oxygen depletion calorimetry.

12-7A-4.5 Test assembly.

1. **Size.** The overall size of the test deck shall be nominally 24 x 24 inches (610 x 610 mm) unless width variation of deck boards requires an increase in overall deck width (i.e., the direction of joists) in order to meet the overall dimensions. The length of individual deck boards shall be 24 inches (610 mm).

2. **Joists.** The deck is supported by two nominal 2 x 6 Douglas-fir joists running perpendicular to the deck boards, and constructed with a 16-inch (406 mm) center-to-

center spacing. A comparable species that may be more commonly used for structural framing of decks in a given region can be substituted for Douglas-fir.

3. **Deck board spacing and fastening.** Edge-to-edge spacing and method of attachment shall conform to the manufacturer's installation recommendations. The front deck board shall be flush with the ends of the joists, and the rear deck board shall overhang the end of the joists by 1 inch (25 mm).

   3.1. In the absence of recommended installation guidance, the edge-to-edge spacing shall be $^{3}/_{16}$ inch (5 mm) with boards mechanically attached to the joists using deck screws.

   3.2. If nominal 6-inch-wide deck boards are used, a total of 5 boards shall be used for each deck. Changing the board width could change the number of deck boards.

12-7A-4.6 Materials.

1. **Cross-sectional dimension.** All deck board materials are to have cross-sectional dimensions equivalent to use in service.

2. **Description.** The material under test should be described as completely as possible (unit weight, thickness, width, and general information regarding composition).

3. **Condition of test material.** Prior to testing, all materials (deck boards and joist material) shall be conditioned to a constant weight or for a minimum of 30 days at 73 ± 4ºF (23 ± 2ºC) and 50 ± 5% relative humidity, whichever occurs first. Constant weight shall be defined as occurring when the change in test material weight is less than or equal to 2 percent in a 24-hour period.

12-7A-4.7 PART A.
Under-deck **flame test.**
12-7A-4.7.1 Equipment.

1. **Burner.** A 12 x 12 inch (300 x 300 mm) sand diffusion burner shall be used. Natural gas, methane or propane shall be supplied to the burner through a metered control system. The gas supply to the burner shall produce a net heat output of 80 ± 4 kW throughout the flame exposure. Burner output can be determined from HRR or calculated from the gas flow rate, temperature, and pressure.

2. **Oxygen depletion calorimeter.** The equipment shall include a hood, associated ducting, and instrumentation to provide HRR data by oxygen depletion calorimetry.

12-7A-4.7.2 Test system preparation.
See Figure No. 1.

1. **Deck support assembly.** The assembly that holds the test deck over the burner.

2. **Baffle panels and joist support.** Horizontal metal plates to support the deck joists along their full length, and also to confine burner flames to the underside of the deck boards located between the support joists.

3. **Back wall.** Ceramic fiber board or another noncombustible panel product for the back wall material. Total height of the back wall shall be 8 feet (2.4 m).

4. **Ledger board.** A 4-foot-long (1.2 m) simulated 2 x 6 ledger board shall be constructed of layers of ceramic fiber board (or other noncombustible panel product) and attached to the wall at a height slightly below the overhang of the rear deck board of the test deck.

12-7A-4.7.3 Conduct of tests.

1. **Airflow.** The test shall be conducted under conditions of ambient airflow.

2. **Number of tests.** Conduct the test on three replicate assemblies.

3. **Burner output verification.** Without a deck in the apparatus, set the output of the burner to 80 ± 4 kW. Conduct a verification run of 3 minutes to ensure the heat release rate, and then turn off the burner.

4. **Measurement of heat release rate.** HRR is measured during the tests with a properly calibrated oxygen depletion calorimeter. Since HRR is typically a post-test analysis, this criterion for Acceptance may be determined at the end of the test.

5. **Burner** positioning. Center the burner directly under the middle deck board, midway between the joists. The distance from the top of the burner to the bottom of the deck boards shall be 27 inches (690 mm).

6. **Moisture content**. Measure the moisture content of the wooden members of the assembly using a moisture meter (ASTM D 4444).

7. **Procedure.**

    7.1. **Ignition.** Ignite the burner, controlling for a constant 80 ± 4 kW output.

    7.2. **Flame exposure.** Continue the exposure for a 3-minute period. Extinguish the burner.

    7.3. **Continued combustion.** Continue observation for an additional 40 minutes or until all combustion has ceased.

8. **Observations.** Note physical changes of the deck boards during the test, including structural failure of any deck board, location of flaming and glowing ignition, and loss of material (i.e., flaming drops of particles falling from the deck). It is desirable to capture the entire test with a video recorder to allow review of the details of performance.

12-7A-4.7.4 Report.
The report shall include a description of the deck board material and the time of any degradation

(effective net peak heat release rate, structural failure, flaming drops or particles falling from the deck) during the test.

1. **Calculated rate of heat release.** The effective net peak heat release rate (HRR) shall be calculated as follows:

    1.1. During the first 5 minutes of the test (the 3 minutes during which the ignition source burner is operating and the immediately following 2 minutes) the effective net peak HRR of the test assembly shall be reported as: effective net peak HRR = (peak heat release rate – 80 kW) / (deck surface area).

    1.2. During the remaining test duration the effective net peak heat release rate of the test assembly shall be reported as: effective net peak HRR = (peak heat release rate) / (deck surface area)

12-7A-4.7.5 Conditions of Acceptance.
Should one of the three replicates fail to meet the Conditions of Acceptance, three additional tests may be run. All of the additional tests must meet the Conditions of Acceptance.

1. Effective net peak heat release rate of less than or equal to 25 kW/ft^2 (269 kW/m^2).

2. Absence of sustained flaming or glowing combustion of any kind at the conclusion of the 40-minute observation period.

3. Absence of falling particles that are still burining when reaching the burner or floor.

12-7A-4.8 PART B. Burning brand exposure.
12-7A-4.8.1 Equipment.

1. **Wind tunnel.** The wind tunnel shall have the capability of providing 12 mph (5.4 m/s) airflow over the deck assembly.

2. **Anemometer.** Device for measuring airflow across the deck.

3. **Burner.** Gas-fueled burner for brand ignition.

12-7A-4.8.2 Test system preparation.
See Figure 2. The ASTM E 108 “A” brand roof test apparatus is to be used, with the following modifications:

1. **Deck support.** The deck shall be supported horizontally with the center 60 inches (150 mm) from the front opening of the wind tunnel and the joists parallel to the airflow and resting on two transverse metal supports. The top surfaces of these supports, no more than 3 inches (75 mm) wide, are at the same height as the floor of the wind tunnel.

2. **Fragments.** Burning fragments shall be free to fall to the floor of the room.

12-7A-4.8.3 Conduct of tests.

1. **Number of tests.** Conduct the test on three replicate assemblies.

2. **Moisture content.** Measure the moisture content of the wooden members of the assembly using a moisture meter (ASTM D 4444).

3. **Procedure.** Adhere to ASTM E 108 “Standard Test Methods for Fire Tests of Roof Coverings” (burning brand test, “A” brand), with apparatus modified as described above in “Test system preparation” and the following procedure:

   3.1 The air velocity shall be calibrated using the 60-inch (1.5 m) framework spacing, with a smooth noncombustible calibration deck at a 5-inch per 12-inch horizontal incline positioned 60 inches (1.5 m) from the front opening of the wind tunnel. All other measurement details shall be followed as specified in Sections 4.4.2, 4.4.3, and 4.4.4 of ASTM E 108. Although ASTM E 108 specifies calibration to be conducted with the 33-inch (840-mm) framework spacing used for the intermittent flame test set up, tests have shown that at the nominal 12 mph setting, there was not difference in measured velocity between the 33- and 60-inch framework spacing.

   3.2 Mount the test specimen at a zero horizontal incline positioned 60 inches (1.5 m) from the front opening of the wind tunnel.

   3.3 Ignite the “A” brands as specified in Section 9.4 of ASTM E 108 as reprinted here:

      1. Each 12- x 12-inch (300 x 300 mm) face for 30 seconds.

      2. Each 2.25- x 12-inch (57 x 300 mm) edge for 45 seconds.

      3. Each 12- x 12-inch (300 x 300 mm) face again for 30 seconds.

   3.4 Center the burning brand laterally on the deck with the front edge 2.5 inches (64 mm) from the entering air edge of the deck.

   3.5 Continue the exposure for a 40-minute period or until all combustion of the deck boards ceases. The test shall be terminated immediately if flaming combustion accelerates uncontrollably (runaway combustion) or structural failure of any deck board occurs.

   Heat Release Rate is not monitored because of the impracticability with the specified airflow.

4. **Observations.** Note physical changes of the deck boards during the test, including deformation from the horizontal plane, location of flaming and glowing combustion, and loss of material (i.e., flaming drops of particles falling from the deck). It is desirable to capture the entire test with a video recorder to allow review of the details of performance.

12-7A-4.8.4 Report.
The report shall include description of the deck board material, and the time of any degradation (accelerated combustion, board collapse, flaming drops or particles falling from the deck).

12-7A-4.8.5 Conditions of Acceptance.
Should one of the three replicates fail to meet the Conditions of Acceptance, three additional tests may be run. All of the additional tests must meet the Conditions of Acceptance:

1. Absence of sustained flaming or glowing combustion of any kind at the conclusion of the 40-minute observation period.

2. Absence of falling particles that are still burning when reaching the burner or floor.

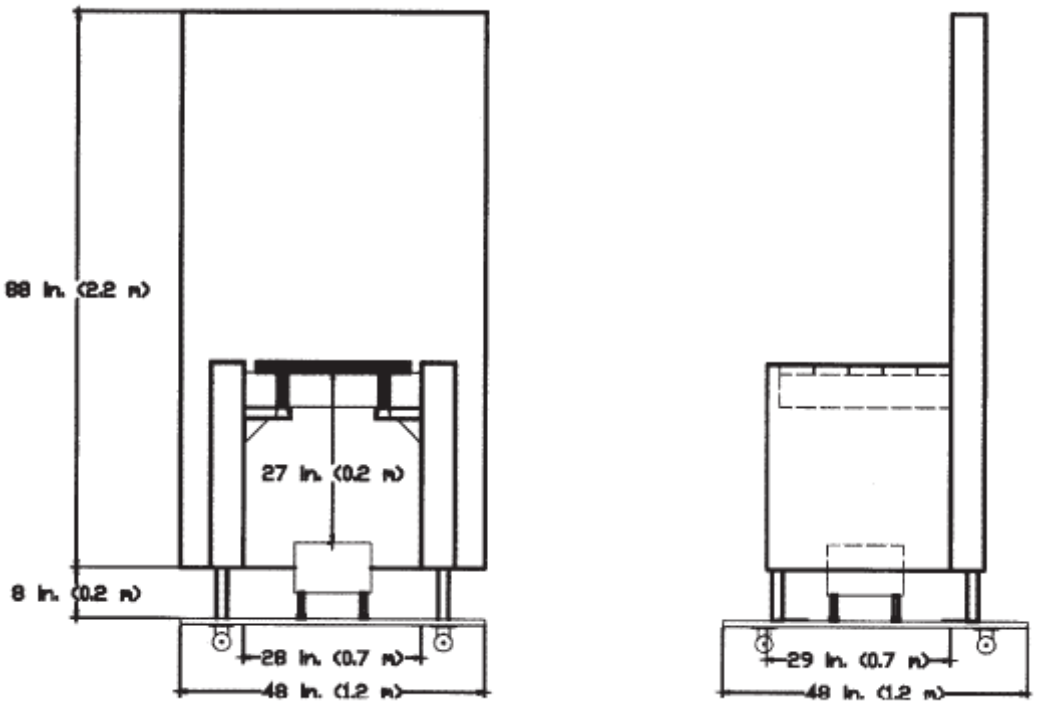

FIGURE 1. DECK TEST ASSEMBLY (UNDER DECK-FLAME)

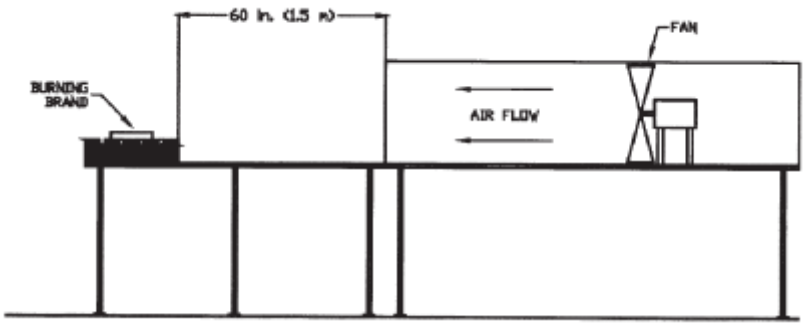

FIGURE 2. DECK TEST ASSEMBLY (BURNING-BRAND)

DECKING ALTERNATE METHOD A
SFM STANDARD 12-7A-4A

12-7A-4A.1 Application.
The minimum design, construction and performance standards set forth herein for unloaded decks are those deemed necessary to establish conformance to the provisions of these regulations. Materials and assemblies that meet the performance criteria of this standard are acceptable for use as defined in the California Building Standards Code.

12-7A-4A.2 Scope.
This standard evaluates the performance of decks (or other horizontal ancillary structures in close proximity to primary structures) when exposed to direct flames and brands. The under-deck flame exposure test is intended to determine the heat release rate (HRR) and degradation modes of deck or other horizontal boards when exposed to a burner flame simulating combustibles beneath a deck. The burning brand exposure test is intended to determine the degradation modes of deck or other horizontal boards when exposed to a burning brand on the upper surface.

12-7A-4A.3 Referenced document.

1 ASTM E 108. Standard Test Methods for Fire Tests of Roof Coverings.

2. California Building Code, Chapter 7A.

12-7A-4A.4 Definitions.

1. **Deck boards.** Horizontal members that constitute the exposed surface of the ancillary structure.

2. **Heat release rate.** The net rate of energy release as measured by oxygen depletion calorimetry.

12-7A-4A.5 Test assembly.

1. **Size.** The overall size of the test deck shall be nominally 24 x 24 inches (610 x 610 mm) unless width variation of deck boards requires an increase in overall deck width (i.e., the direction of joists) in order to meet the overall dimensions. The length of individual deck boards shall be 24 inches (610 mm).

2. **Joists.** The deck is supported by two nominal 2 x 6 Douglas-fir joists running perpendicular to the deck boards, and constructed with a 16-inch (406 mm) center-to-center spacing. A comparable species that may be more commonly used for structural framing of decks in a given region can be substituted for Douglas-fir.

3. **Deck board spacing and fastening.** Edge-to-edge spacing and method of attachment shall conform to the manufacturer's installation recommendations. The front deck board

shall be flush with the ends of the joists, and the rear deck board shall overhang the end of the joists by 1 inch (25 mm).

3.1. In the absence of recommended installation guidance, the edge-to-edge spacing shall be $^{3}/_{16}$ inch (5 mm) with boards mechanically attached to the joists using deck screws.

3.2. If nominal 6-inch-wide deck boards are used, a total of five boards shall be used for each deck. Changing the board width could change the number of deck boards.

12-7A-4A.6 Materials.

1. **Cross-sectional dimension.** All deck board materials are to have cross-sectional dimensions equivalent to use in service.

2. **Description.** The material under test should be described as completely as possible (unit weight, thickness, width, and general information regarding composition).

3. **Condition of test material.** Prior to testing, all materials (deck boards and joist material) shall be conditioned to a constant weight or for a minimum of 30 days at 73 ± 4ºF (23 ± 2ºC) and 50 ± 5 percent relative humidity, whichever occurs first. Constant weight shall be defined as occurring when the change in test material weight is less than or equal to 2 percent in a 24-hour period.

   Note: The moisture content of joists shall be between 8-and 10-percent moisture content.

12-7A-4A.7 Under-deck flame test.

12-7A-4A.7.1 Equipment.

1. **Burner.** A 12- x 12-inch (300 x 300 mm) diffusion burner shall be used. Natural gas, methane or propane shall be supplied to the burner through a metered control system. The gas supply to the burner shall produce a net heat output of 80 ± 4kWthroughout the flame exposure. Burner output can be determined from HRR or calculated from the gas flow rate, temperature, and pressure.

2. **Oxygen depletion calorimeter.** The equipment shall include a hood, associated ducting, and instrumentation to provide HRR data by oxygen depletion calorimetry.

12-7A-4A.7.2 Test system preparation.
See 12-7A-4 Figure No. 1.

1. **Deck support assembly.** Assembly that holds the test deck over the burner.

2. **Baffle panels and joist support.** Horizontal metal plates to support the deck joists along their full length, and also to confine burner flames to the underside of the deck boards located between the support joists.

3. **Back wall.** Ceramic fiber board or another noncombustible panel product for the back wall material. Total height of the back wall is 8 feet (2.4 m).

4. **Ledger board.** A 4-foot-long (1.2 m) simulated 2 x 6 ledger board shall be constructed of layers of ceramic fiber board (or other noncombustible panel product) and attached to the wall at a height slightly below the overhang of the rear deck board of the test deck.

12-7A-4A.7.3 Conduct of tests.

1. **Airflow.** The test is conducted under conditions of ambient airflow.

2 **Number of tests.** Conduct the test on three replicate assemblies.

3 **Burner output verification.** Without a deck in the apparatus, set the output of the burner to 80 ± 4 kW. Conduct a verification run of 3 minutes to ensure the heat release rate, and then turn off the burner.

4. **Measurement of heat release rate.** HRR is measured during the tests with a properly calibrated oxygen depletion calorimeter. Since HRR is typically a post-test analysis, this criterion for Acceptance may be determined at the end of the test.

5. **Burner positioning.** Center the burner directly under the middle deck board, midway between the joists. The distance from the top of the burner to the bottom of the deck boards shall be 27 inches (690 mm).

6. **Moisture content.** Measure the moisture content of the wooden members of the assembly using a moisture meter (ASTM D 4444).

7. **Procedure.**

   7.1. **Ignition.** Ignite the burner, controlling for a constant 80 ± 4 kW output.

   7.2. **Flame exposure.** Continue the exposure for a 3-minute period. Extinguish the burner.

   7.3. **Continued combustion.** Continue observation for an additional 40 minutes or until all combustion has ceased. The test shall be terminated immediately if flaming combustion accelerates uncontrollably (runaway combustion) or structural failure of any deck board occurs.

8. **Observations.** Note physical changes of the deck boards during the test, including structural failure of any deck board, location of flaming and glowing ignition, and loss of material (i.e., flaming drops of particles falling from the deck). It is desirable to capture the entire test with a video recorder to allow review of the details of performance.

12-7A-4A.7.4 Report.
The report shall include a description of the deck board material and the time of any degradation (effective net peak heat release rate) during the test.

12-7A-4A.7.5 Conditions of acceptance.
Should one of the three replicates fail to meet the Condition of Acceptance, three additional tests may be run. All of the additional tests must meet the Condition of Acceptance with an effective peak heat release rate of less than or equal to 25 kW/ft^2 (269 kW/m^2).

IGNITION-RESISTANT MATERIAL
SFM STANDARD 12-7A-5

12-7A-5.1 Application.
The minimum design, construction and performance standards set forth herein for ignition-resistant materials are those deemed necessary to establish conformance to the provisions of these regulations. Materials and assemblies that meet the performance criteria of this standard are acceptable for use as defined in the California Building Standards Code.

12-7A-5.2 Scope.
This standard determines the performance of ignition-resistant materials when exposed to embers and small flames.

12-7A-5.3 Referenced documents.

1 ASTM E 84, Standard Test Method for Surface Burning Characteristics of Building Materials.

2. UL 723, Test for Surface Burning Characteristics of Building Materials.

3. California Building Code, Chapter 7A.

12-7A-5.4 Definitions.

Ignition-resistant material A type of building material that resists ignition or sustained flaming combustion sufficiently so as to reduce losses from wildland-urban interface conflagrations under worst-case weather and fuel conditions with wildfire exposure of burning embers and small flames, as prescribed in California Building Standards Code Section 703A.

12-7A-5.5 Equipment.
Equipment is to be in accordance with the tests specified in Section 12-7A-5.9 Conduct of Tests.

12-7A-5.6 Materials.
Materials used are to be in accordance with the tests specified in Section 12-7A-5.9 Conduct of Tests.

12-7A-5.7 Test specimen preparation.
The test specimen is to be prepared in accordance with the tests specified in Section 12-7A-5.9 Conduct of Tests.

12-7A-5.8 Weathering.
Weathering of materials shall be in accordance with California Building Code Section 703A Standards of Quality.

12-7A-5.9 Conduct of tests.
When weathering is required by California Building Code Section 703A Standards of Quality, the materials to be tested shall be weathered in accordance with Section 12-7A-5.8 prior to testing in accordance with this Section. All materials shall be tested in accordance with the test procedures set forth in ASTM E 84 or UL 723 except that the test shall be continued for an additional 20 minutes for a total test period of 30 minutes.

12-7A-5.10 Report.
The report shall include a description of the tested material, whether weathering was conducted, and the time and description of any degradation including but not limited to: structural failure, flaming drops or particles falling from the material during the test.

12-7A-5.11 Conditions of Acceptance:

1. **Flame spread.** Materials shall exhibit a flame spread index not exceeding 25 and shall show no evidence of progressive combustion following the 30-minute test period.

2. **Flame front.** Materials shall exhibit a flame front that does not progress more than $10^{1}/_{2}$ feet (3200 mm) beyond the centerline of the burner at any time during the 30-minute test period.

CHAPTER 12-8-1
FIRE-RESISTIVE STANDARDS FOR FIRE PROTECTION

STANDARD 12-8-100
ROOM FIRE TEST FOR WALL AND CEILING MATERIALS
(See Chapter 35, *California Building Code.*)

STATE FIRE MARSHAL

Authority: Sections 13143, 13146.1, Health and Safety Code

Reference: Sections 13108, 13143, 13146.1, Health and Safety Code

SCOPE

Sec. 12-8-101.

(a) **Basic.** This standard is intended to evaluate, under a specified fire exposure condition, the contribution to room fire growth provided by wall ceiling and/or floor materials or assemblies. This standard is not intended to evaluate the fire endurance or flamespread of material or assemblies.

Note: See State Fire Marshal (SFM) 7-1 and *Uniform Building Code* (UBC) Standard 8-1.

This standard can be used to evaluate the effectiveness of thermal barriers in restricting the contribution of combustible materials in the wall and floor assemblies to fire growth in a padded safety cell. This standard shall be used in conjunction with ASTM E 603-77, “Standard Guide for Room Fire Experiments,” which covers instrumentation, safety precautions and the general effect of various parameters.

(b) **Tests and listings by approved testing agency.** Test data for wall and/or ceiling materials or assemblies investigated and tested in accordance with the Standard for Safety established by Underwriters Laboratories, Inc., UL 723C, “Investigation for the Classification of Wall and Ceiling Interior Finish Materials and Assemblies Using a Room Fire Test,” will be acceptable for evaluation against this standard, provided all instrumentation data required by this standard is incorporated in the test and report.

(c) **Test simulation.** The test simulates a fire in the comer of an 8-foot by 12-foot compartment containing a single open doorway; this can be used to evaluate the relative performance of specific wall, ceiling and floor materials or assemblies when they are used together in the same relationship within an enclosure, in addition to simulating the manner in which they will be used.

(d) **Materials considered.** The test may be used for evaluating wall, ceiling and flooring finish materials and assemblies, including panels, tiles, boards, sprayed or brushed coatings, etc.

FIRE AND SMOKE MEASUREMENTS
AND PHOTOGRAPHIC RECORD

Sec. 12-8-102.

(a) **Significance.** This fire test is applicable to a description of certain fire performance characteristics in appraising wall, ceiling and flooring materials, products, or systems under specified fire exposure conditions in an enclosure. The test indicates the maximum extent of fire growth in an enclosure, the rate of heat release, and if they occur, the time to flashover and the time to flame extension beyond the doorway following flashover. Time to flashover is either the time when the radiant flux onto the floor reaches 20 kW/m^2 or the average temperature of the upper air reaches 1100°F. A crumpled up single sheet of newspaper may be placed on the floor 3 feet out from the center of the front wall.

The spontaneous ignition of this newspaper will provide a visual indication of flashover. It determines both the extent to which the wall and ceiling materials or assemblies may contribute to fire growth in a compartment and the potential for fire spread beyond the compartment under the particular conditions simulated. It does not measure the contribution of the furnishing materials.

(b) **Fire measurements.** The potential for the spread of fire to other objects in the enclosure interior, remote from the ignition source, is evaluated by measurements of:

1. The total heat flux incident at the center of the floor.

2. A characteristic upper level gas temperature in the test compartment.

(c) **Fire spread potential.** The potential for the spread of fire to objects outside the compartment of origin is evaluated by the measurement of the total rate of heat release of the fire.

(d) **Smoke measurements.** Measurements of the rate of production of carbon monoxide and visible smoke are taken.

(e) **Photographic record.** The overall performance of the test specimen is to be visually documented by full color photographic records. Videotaping of the complete fire test may be done as an alternate to the continuous photographic record. Such records may show when each area of the test specimen becomes involved in the fire.

(f) **Photographic Specification.** Photographic equipment shall be used to continuously record the fire spread in the room and the fire projection from the door of the room. The location of the camera must avoid interference with the air inflow.

Note: A window, cut 2-0 above the floor wall facing the gas burner, fitted with heat-resistant, impact-resistant glazing provides useful photographic access. Flood lights should not raise

the ambient temperature in the room above that specified in Section 12-8-110. The interior wall surfaces of the test room, adjacent to the corner in which the burner is located, shall be clearly marked with a 12-inch grid. A clock shall appear in all photographic records, giving the time to the nearest second (or 0.01 minute) from the start of the test. This clock shall be accurately synchronized with all other measurements, or other provisions shall be made to correlate the photographic record with time. Color slides shall also be taken at 15-second intervals for the first three minutes of the test and at a minimum of 30-second intervals thereafter for the duration of the test.

REPORT

Sec. 12-8-103.
The report shall include the following items:

1. **Material description.** The name, thickness, density and size of the material shall be listed, along with other identifying characteristics or labels.

2. Materials mounting and conditioning.

3. Layout of specimens and attachments in test room.

4. Relative humidity and temperature of the room and the test building prior to and during the test.

5. The fuel gas flow to the ignition burner and its calculated rate of gross heat output.

6. The total incident heat flux at the center of the floor shall be reported for each heat flux gage as a function of time starting one minute prior to the test.

7. The temperature of gases in the room, the doorway, and in the exhaust duct shall be reported for each thermocouple as a function of time starting one minute prior to the test. The temperature recorded by the thermocouple in the duct will be used in the required calculation.

8. The volumetric flow rate of the gas in the duct shall be calculated from Equation 12 in Appendix 12-8-1A and reported as a function of time starting one minute prior to the test.

9. The oxygen concentration in the analyzer shall be reported as a function of time starting one minute prior to the test.

10. The carbon dioxide concentration, if measured in the analyzer, shall be reported as a function of time starting one minute prior to the test.

    Note: Separate reporting of the volumetric flow rate, temperature, oxygen and carbon dioxide and/or carbon monoxide concentrations provide diagnostic information on the performance of the exhaust gas collection system and provide a check on the heat production calculations.

11. The total rate of heat production shall be calculated from the measured oxygen and carbon dioxide and/or carbon monoxide concentrations, and the temperature and volumetric flow rate of the gas in the duct.

12. The product of the volumetric flow rate of the gas in the duct and the carbon monoxide concentration at the specified location in the combustion hood system shall be reported as a function of time after the start of the test.

13. The product of the volumetric flow rate of the gas in the duct at the duct gas temperature and the optical density per foot at the specified smoke meter location in the duct shall be reported as a function of time after the start of the test.

    Note: If this product is multiplied by 1.55 × 10-3, for English units, it gives the smoke units produced per second, where a smoke unit is defined as the quantity of smoke which, when distributed uniformly over a cubic meter, would have an optical density of unity over a path length of 1 meter. (This is the definition used in the Proposed ASTM Test for Heat and Visible Smoke Release Rates for Materials and Products.)

14. A transcription of the visual, photographic, audio and written records of the fire test shall be provided. The records shall indicate the time of ignition of the wall and ceiling finishes, the approximate location of the flame front most distant from the ignition source, at intervals not exceeding 15 seconds during the fire test, the time of flashover, and the time at which flames extend outside the doorway. In addition, still photographs taken at intervals not exceeding 15 seconds for the first three minutes, beginning at the start of the test and at every 30 seconds for the remainder of the test shall be supplied. Photographs showing the extent of the damage of the materials after the test shall also be supplied. The camera settings, film speed, and lighting used shall be described.

15. A report on the pretest calibration conducted in Section 12-8-113.

16. Report on the barometric pressure at time of test.

17. A complete discussion of the criteria. This shall include all calculations and references to other data used to satisfy the criteria presented in Section 12-8-115.

TEST SAMPLES

Sec. 12-8-104.
Samples of the test material, both in its original (untested) and post-tested conditions, shall be retained by the testing agency. All samples shall be retained by the testing agency for a minimum period of three years from the date of the test. All samples shall measure 4 inches by 4 inches by the sample thickness. Two samples of the material in its original pretest condition shall be retained. These samples shall be taken from the same material lot used for the test samples. Post-test samples from the test shall include one each, from the geometric center of each wall panel and the ceiling panel, and one each from the following locations:

1. The top, mid-height and bottom of each wall along the vertical centerline of each wall panel.

2. The quarter points of the ceiling, in those cases in which the test material was applied to the ceiling.

All samples shall be clearly identified as to the material, test date and their location within the room.

SUMMARY OF METHOD AND HEAT SOURCE

Sec. 12-8-105.

(a) **Summary of method.** The test involves an ignition source exposure of the wall, ceiling and/or floor lining materials or assemblies as they would be incorporated in actual safety cell installation.

(b) **Heat source.** This method uses a gas burner to produce a diffusion flame in contact with the walls and ceiling in the corner of an 8-foot by 12-foot by 8-foot-high compartment. The burner produces a prescribed gross rate of heat output as given in Table 12-8-1A and Figure 12-8-1.

The contribution of the wall, ceiling and flooring materials or assemblies to fire growth is measured in terms of the time history of the incident heat flux at the center of the floor, the time history of the temperature of the gases in the upper part of the compartment, the time to flashover and the rate of heat release. The test is conducted with natural ventilation to the test compartment provided through a single doorway 30 inches by 80 inches in width and height. The combustion products are collected in a hood feeding into a plenum connected to an exhaust duct in which measurements are made of the gas velocity, temperature and concentrations.

IGNITION SOURCE AND LOCATION

Sec. 12-8-106.

(a) **Ignition source.** The ignition source for the test shall be a gas burner with a nominal 12 inches by 12 inches porous top surface of a refractory material.

Note: A burner may be constructed with a 1-inch porous ceramic-fiber board over a 6-inch plenum; or alternatively a minimum 4-inch layer of Ottowa sand can be used to provide the horizontal surface through which the gas is supplied. The sand burner may be preferable for dripping materials. This type of burner is shown in Figure 12-8-7.

(b) **Burner location.** The top surface of the burner through which the gas is supplied shall be located horizontally, 12 inches off the floor, and the burner enclosure shall be in contact with both walls in a corner of the room opposite from the door. The edge of the diffusion surface shall be within 1 inch of the wall.

(c) **Gas supply.** The gas supply to the burner shall be propane and shall produce a heat source as outlined in Section 12-8-105 (b). The flow rate shall be metered throughout the test. The burner shall be so designed that it can be set at the flow rates required to produce the gross rates of heat release as specified in Section 12-8-105 (b).

(d) **Ignition.** The burner may be ignited by a pilot burner or a remote controlled spark igniter.

COMPARTMENT DIMENSIONS
AND CONSTRUCTION

Sec. 12-8-107.

(a) **Compartment geometry and construction.** The interior dimensions of the floor of the fire room when the specimens are in place, shall measure 8 feet ± 1 inch × 12 feet ± 1 inch. The finished ceiling shall be 8 feet ± 0.5 inch above the floor. There shall be four walls at right angles defining the compartment.

Note: The experimental choices for the sizes of compartment fire experiments are discussed in Section 5 of ASTM E 603. The compartment size defined in this section has been chosen to make it convenient to utilize standard sized 4-foot by 8-foot building materials or panels.

(b) **Doorway.** There shall be a 30-inch ± 0.25-inch × 80-inch ± 0.25-inch doorway in the center of one of the 8-foot by 8-foot walls, and no other wall or ceiling openings that will allow ventilation.

(c) **Wall construction.** The wall containing the door shall be of calcium silicate board of 46 pcf density and 0.5 inch nominal thickness. As an alternative to the calcium silicate board, 0.5-inch thick gypsum wallboard may be used. The door frame shall be constructed to remain unchanged during the test period to a tolerance of ± 1 percent in height and width.

(d) **Compartment construction.** The test compartment may be a framed structure or a concrete block structure. If self-supporting panels are tested, a separate exterior frame or block compartment may not be required.

(e) **Floor materials.** The floor of the test compartment shall be noncombustible as defined by ASTM E 136.

SPECIMEN MOUNTING AND TEST MATERIAL SIZE

Sec. 12-8-108.

(a) **Specimen mounting.** The specimens (e.g., the ceiling and wall materials whose condition is being tested) shall be mounted on a framing or support system comparable to that intended for their field use, using backing materials, insulation, or air gaps, as appropriate to the intended application and representing a typical value of thermal resistance for the wall system.

(b) **Test material size.** In the test, the ceiling material shall cover the entire ceiling if such an end use application is anticipated and the wall material shall cover three of the side walls, but not the wall containing the door. The wall and ceiling materials shall be mounted in the same wall-ceiling relationship in which they are intended for use, and it therefore may be necessary to actually construct a section of a prototype padded safety cell.

FIRE COMPARTMENT ENVIRONMENT

Sec. 12-8-109.
The test building in which the fire compartment is located shall have vents for the discharge of combustion products and have provisions for fresh air intake, so that no oxygen deficient air shall be introduced into the fire compartment during the test. Prior to initiation of the test the ambient air at the mid-height entrance to the compartment shall have a velocity in any direction of less than 100 feet per minute. The building shall be of adequate size so that there shall be no smoke accumulation in the building below the level of the top of the fire compartment.

AMBIENT CONDITIONS IN TEST
BUILDING AND FIRE COMPARTMENT

Sec. 12-8-110.

(a) **Ambient conditions in test building.** The ambient temperature in the test building at any location outside the fire compartment shall be above 40°F, and the relative humidity shall be less than 75 percent for the duration of the test.

(b) **Ambient conditions in fire compartment.** The ambient temperature in the fire compartment measured by one of the thermocouples specified in Section 12-8-112, Item 2., D., shall be within the range of 65°F to 75°F for at least 16 hours prior to the test.

(c) **Humidity.** The ambient relative humidity in the fire compartment for 16 hours prior to the test shall be within the range of 50 ± 5 percent. This may require the use of a humidifier or dehumidifier.

SPECIMEN CONDITIONING

Sec. 12-8-111.
The specimens shall be conditioned prior to mounting at a temperature of 70°F ± 5°F, and at a relative humidity of 50 ± 5 percent until they reach a rate of weight change of less than 0.1 percent per day.

INSTRUMENTATION

Sec. 12-8-112.
The following are the minimum requirements for instrumentation for this test:

Note: Added instrumentation may be desirable for further information.

1. **Total heat flux gages.**

   A. **Location.** Two gages shall be mounted within 5 inches of each other and within a distance of 2 inches above the floor surface upward in the geometric center of the floor.

      Note: See Figure 12-8-2.

      One additional gage shall be mounted in the wall adjacent to the ignition burner during calibration tests only.

Note: See Section 12-8-113, Item 2.

It shall be 6 feet above the floor, and 6 inches from the corner where the burner is located, along the wall opposite the doorway. The front surface of the calibration gage shall be flush with the wall surface, within 0.04 inch.

B. Specification. The gages shall be of the Gardon type, with a flat black surface and a 180° view angle, and shall be maintained at a constant temperature, within ± 1.8°F above the dew point by water supplied at a temperature of 120°F to 150°F. This will normally require a flow rate of at least 0.1 gpm. The full-scale output range shall be 5 Btu/ft.^{2}/sec. for the floor gage and 10 Btu/ft.^{2}/sec. for the wall gage.

Note: A suitable Gardon-type heat flux gage, manufactured by the Medtherm Corporation in Huntsville, Alabama, is listed under model 64-5-18 for the 5 Btu/ft.^{2}/sec. range and under model 64-10-18 for the 10 Btu/ft.^{2}/sec. range. See R. Gardon, "An Instrument for the Direct Measurement of Intense Thermal Radiation," Review of Scientific Instruments, Vol. 24, No. 5, May 1953, pp. 36-70, for further information.

2. Gas temperature thermocouples.

A. **Specification.** Twenty-mil-diameter bare chromelalumel thermocouple wire within 0.5 inch of the bead should be run along expected isotherms to minimize conduction errors. The insulation between the chromel and alumel wires must be stable to at least 2000°F or the wires must be separated.

Note: Metal clad ceramic powder will work satisfactorily. The commonly used silicone-impregnated glass insulation will break down above 1500°F.

B. **Location for doorway.** A thermocouple shall be located in the interior plane of the door opening on the door centerline, 1 inch down from the top.

Note: See Figure 12-8-3.

C. **Locations for room.** Thermocouples shall be located 4 inches down from the center of the ceiling and from the center of each of the four ceiling quadrants, and one shall be directly over the center of the ignition burner, 4 inches below the ceiling. The thermocouples shall be mounted on supports, with their junctions at least 4 inches away from a solid surface. There shall be no attachments to the test specimens.

Note: See Figure 12-8-3.

D. **Location in canopy hood and duct systems.** One pair of thermocouples shall be placed 11 feet downstream to the entrance to the horizontal duct. The pair of thermocouples shall straddle the center of the duct and be separated by 2 inches from each other.

Note: See Figure 12-8-4.

3. **Canopy hood and exhaust duct location and design.** A hood shall be installed immediately adjacent to the door of the fire room. The bottom of the hood shall be level with the top surface of the room. The face dimensions of the hood shall be minimum 8 feet by 8 feet and the depth shall be 3.5 feet. The hood shall feed into a plenum having a 3-foot by 3-foot cross section.

   Note: See Figure 12-8-4.

   The plenum shall have a minimum height of 3 feet. The height can be increased up to a maximum of 6 feet to satisfy building constraints. The exhaust duct connected to the plenum shall be16 inches in diameter, horizontal, and shall have a circular aperture of 12 inches at its entrance.

   The hood shall have sufficient draft to collect all the combustion products leaving the room. This draft should be capable of moving up to 5,000 standard cubic feet per minute (scfm) during the test. Provisions shall be made to vary the draft so that it can operate at either 1,000 or 5,000 scfm. Mixing vanes may also be required in the duct if concentration gradients are found to exist.

   An alternate exhaust system design may be used if it has been shown to produce equivalent results. Equivalency may be shown by meeting the requirements of Section 12-8-113, Item 5.

4. **Duct gas velocity specification.** A bidirectional probe or equivalent measuring system shall be used to measure gas velocity in the duct.

   Note: See B. J. McCaffrey and G. Heskjestad, Combustion and Flame, 26, 125-127 (1976).

   The probe shown in Figure 12-8-6 consists of a short stainless steel cylinder 1.75-inch long and 0.975-inch inside diameter with a solid diaphragm in the center. The pressure taps on either side of the diaphragm support the probe. The axis of the probe shall be along the centerline of the duct 11 feet downstream from the entrance. The taps shall be connected to a pressure transducer which shall be able to resolve pressure differences of 0.0001-inch of water.

   Notes:

   1. Capacitance-type transducers have been found to be the most stable for this application.

   2. The bidirectional probe is specified rather than the pilot-static tube in order to avoid problems of clogging with soot.

5. **Duct oxygen concentration specification.** A stainless steel gas sampling tube shall be located 13 feet downstream from the entrance to the duct, to obtain a continuously flowing sample for determining the oxygen concentration of the exhaust gas as a function of time. A suitable filter and cold trap shall be placed in the line to

remove particulates and water. The oxygen analyzer shall be of the paramagnetic or polarographic type and shall be capable of measuring the reduction in oxygen concentration over the range of 0.21 down to 0.15 with an accuracy of ± 2 percent in this concentration range. The signal from the oxygen analyzer must be within 5 percent of its final value in 30 seconds after introducing a step change in composition of the gas stream flowing past the inlet to the sampling tube.

6. **Duct carbon dioxide concentration specification.** The gas sampling tube defined in Section 12-8-112, Item 5, or an alternate tube in the same location, shall provide a continuous sample for the measurement of the carbon dioxide concentration with an analyzer which has a range of 0 to 20 percent and a maximum error of 2 percent of full-scale. The total system response time between the sampling inlet and the meter shall be no greater than 30 seconds.

7. **Duct carbon monoxide concentration specification.** The gas sampling tube defined in Section 12-8-112, Item 5, or an alternate tube in the same location, shall provide a continuous sample for the measurement of the carbon monoxide concentration with an analyzer which has a range of 0 to 10 percent and a maximum error of 2 percent of full-scale.

8. **Optical density of smoke in duct specification (supplementary measurement).** A meter shall be installed to measure the optical density of the exhaust gases in a vertical path across the width of a horizontal duct, 1 foot downstream of the duct velocity probe. A horizontal path should be used with a vertical duct.

   A suitable design for the meter is as follows:

   Use as a light source a number 1810 lamp which is rated at 6.3 volts, 0.40 amps, and 1.5 candela and is operated at 5 volts d.c. The lamp is mounted at the focal point of a + 20 diopter and 50 mm diameter double convex collimating lens. At the other side of the duct the collimated beam is intercepted by a + 10 diopter 50 mm diameter plane convex lens and concentrated onto the cathode of a 1P39 phototube. A Corning CS3-132 type 3304 filter (available from the Swift Glass Company, Box 890, Elmira Heights, NY 14903) is used in front of the phototube to correct its spectral response to the standard photoptic curve of the human eye.

   The lens, filter and phototube are mounted inside of a light-tight housing which is blackened inside to minimize internal reflections. The phototube is connected to a linear operational power amplifier with an adjustable gain of 106 which in turn is connected to a commercially available log ratio amplifier to produce an output voltage proportional to the optical density. A smoke meter meeting the above requirements is described in a report by R. W. Bukowski, “Smoke Measurements in Large- and Small-scale Fire Testing,” NBSIR 78-1502, October 1978. Alternate systems can be used, but the color temperature of the light source must match that of the 1810 lamp under the specified operating conditions, and the light receiver, including the photo detector, must match the standard photoptic curve of the eye.

   The optical density shall be continuously recorded over the duration of the test. After completion of the test, the optical density reading must be less than 0.02 (transmission higher than 95 percent).

CALIBRATION AND DOCUMENTATION OF
IGNITION SOURCE AND TEST EQUIPMENT

Sec. 12-8-113.
A calibration test shall be performed prior to and within 30 days of any fire test. The calibration test, to last for15 minutes, shall use the standard ignition source with inert wall and ceiling materials (calcium silicate board of 46 pcf density and 0.5-inch thickness. The following quantities shall be reported:

1. Once the burner is activated, the output of all instruments normally used in the test is to be measured and data recorded as a function of time.

2. The time history of the total heat flux at the wall location.

3. The maximum extension of the burner flame as recorded by still color photographs of 0.1 second exposure time taken at a minimum of 30-second intervals, or more often if it is changing rapidly. These shall be taken with a camera operating in the “operative mode” with the camera set to the standard ASA ratings of the film.

4. The temperature and velocity profiles across the duct cross-section at the location of the bidirectional probe if one is used. These profiles shall be used to determine the factor “k” in Equation 12, Appendix 12-8-1A.

5. The total rate of heat production is determined both by the oxygen consumption calculation and by the metered gas input. These must agree within 5 percent.

   Note: The net heat of combustion is 2,283 Btu/ft^3 for propane at 68°F and 14.7 psi. This value should be used in this calculation.

TEST PROCEDURE

Sec. 12-8-114.
The following paragraphs describe the steps in the test procedure:

1. Establish an initial volumetric flow rate of 1,000 cfm through the duct if a forced ventilation system is used. If a forced ventilation system is used, increase the volume flow rate through the duct to 5,000 cfm when the oxygen content falls below18 percent.

2. Turn on all sampling and recording devices and establish steady state baseline readings for at least one minute.

3. Ignite the gas burner and start the clock simultaneously. Increase gas flow rate in steps as indicated in Section 12-8-106 (c).

4. Take 35 mm color slides at 15-second intervals during the first three minutes and at 30-second intervals thereafter to photographically document the growth of the fire.

5. Provide a continuous voice or written record of the fire, which will give times of all significant events such as flame attachment to the wall, flames out of the doorway, flashover, etc.

6. The ignition burner shall be shut off at 15 minutes after initiation of the test and the test terminated at that time unless safety considerations dictate an earlier termination.

7. Photograph and verbally describe the damage after the test.

FLASHOVER AND SMOKE

Sec. 12-8-115.

(a) **Flashover.** The criterion for acceptable performance shall be that the compartment never reaches flashover at any time during the 15-minute period of ignition source burner operation. Flashover shall be considered to have occurred if one or more of the following conditions occur during the test:

1. The average ceiling gas temperature, as determined by averaging the temperature at the center and quarter point thermocouples, reaches or exceeds 1112°F.

2. The total heat flux at the floor, as determined by either of the total heat flux meters mounted in the geometric center of the floor, reaches or exceeds a value of 1.761 Btu/ft.^{2}/sec.

3. Visible flaming extends from the doorway of the test compartment.

(b) **Smoke.** Materials meeting the acceptance criteria of this standard shall have a smoke density rating no greater than 75 when tested in the thickness intended for use by UBC Standard 26-5, or when tested in accordance with UBC Standard 8-1.

MARKINGS

Sec. 12-8-116.
All materials shall be provided with a manufacturer's label or other permanent marking clearly identifying the manufacturer label or other permanent marking clearly identifying the manufacturer, the product and model numbers (or brand name). Materials approved and listed by the State Fire Marshal shall be marked as required by Section 1.58, Title 19, C.A.C.

TABLE 12-8-1A
IGNITION SOURCE RATE OF HEAT RELEASE
PROGRAM FOR TESTS OF SAFETY CELL PADDING MATERIALS

ELAPSED TEST TIME (Min)	BURNER GROSS RATE OF HEAT RELEASE (KW)
0	44
1	88
2	132

3	132
4	88
5-15	44

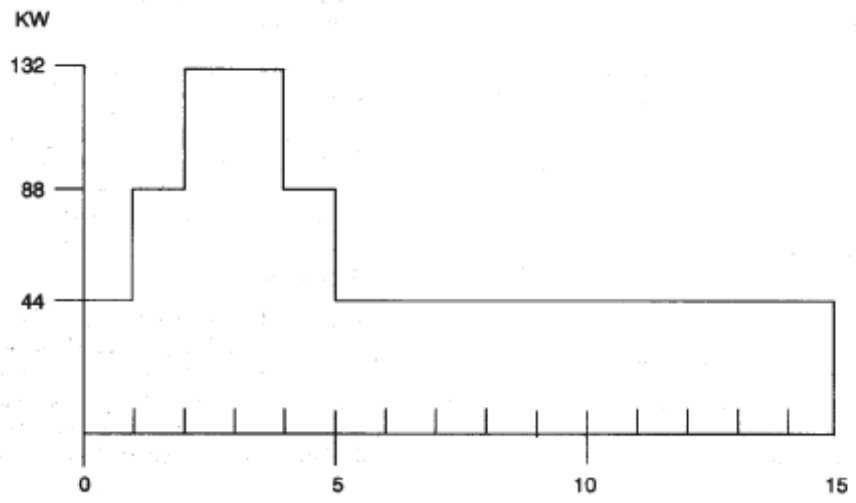

FIGURE 12-8-1—TIME—MINUTES

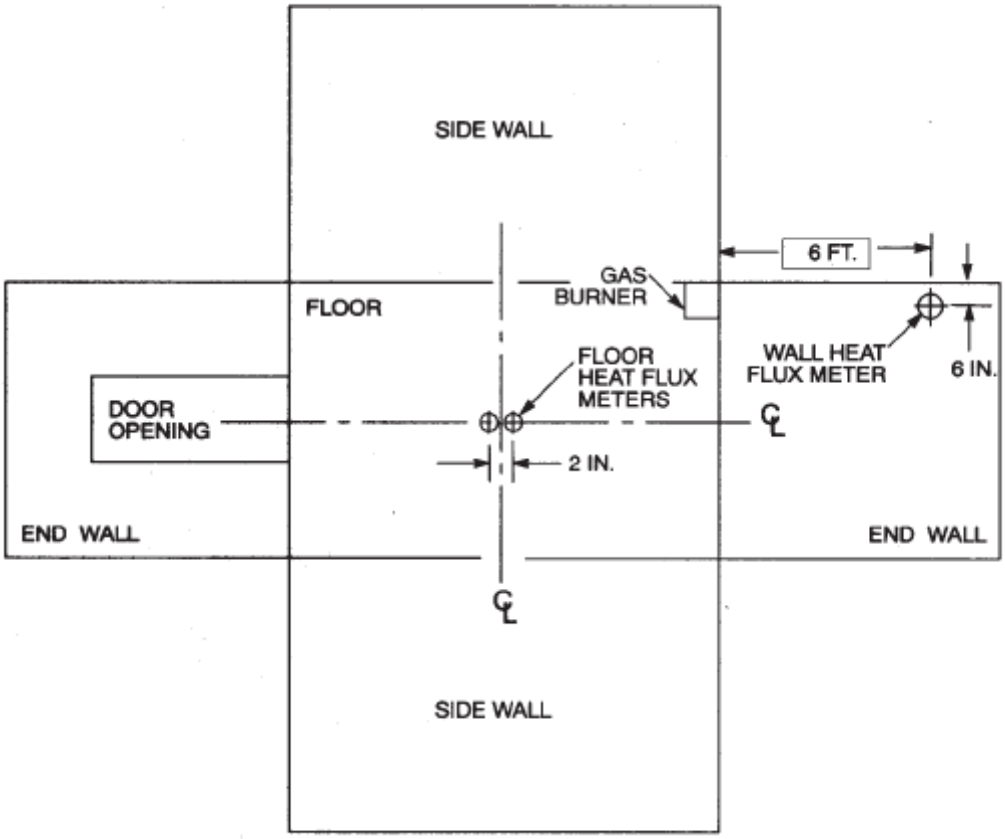

FIGURE 12-8-2—LOCATION OF HEAT FLUX METERS

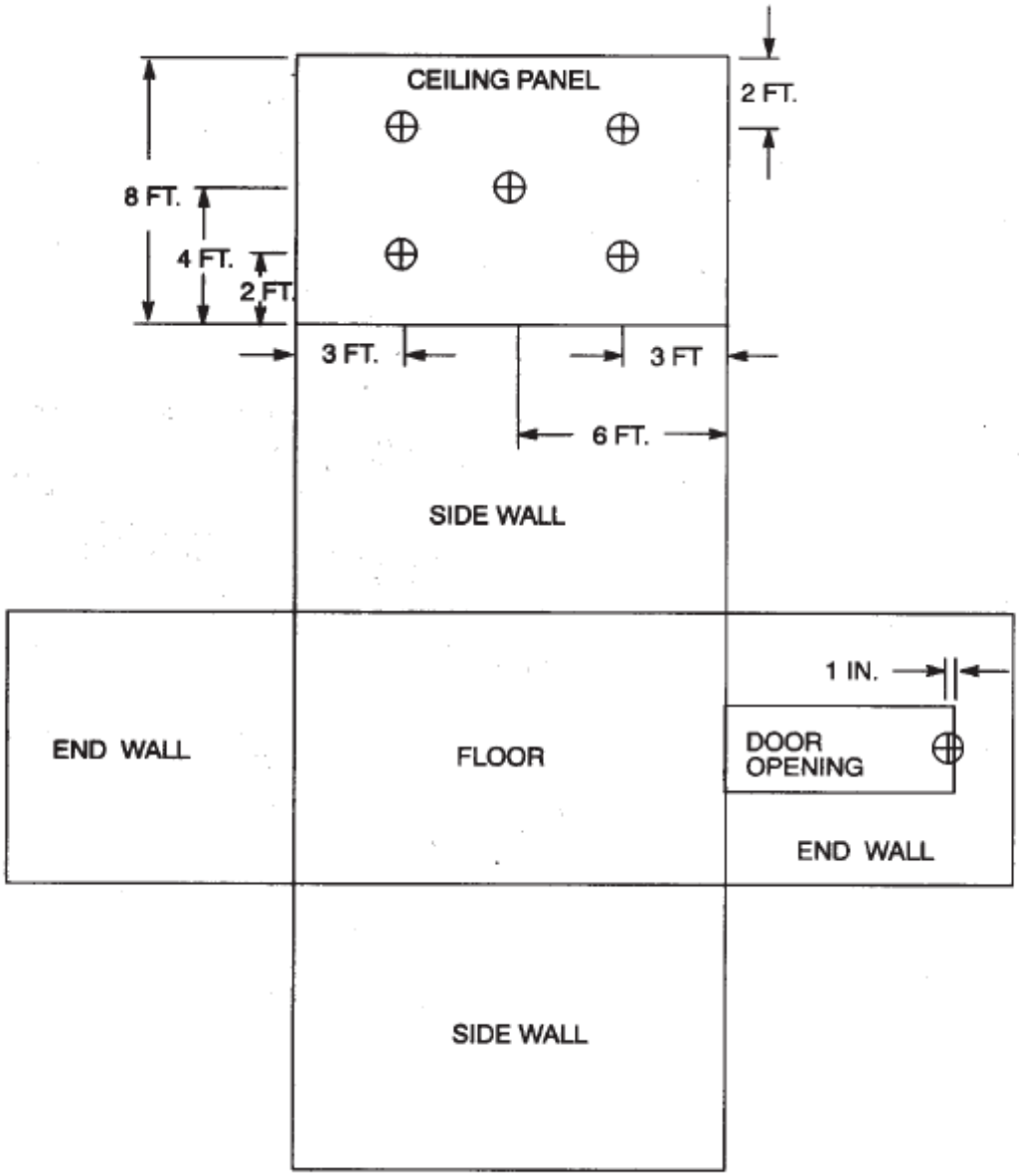

FIGURE 12-8-3—ROOM THERMOCOUPLE LOCATIONS

Note: Two 0.20 mil. Type K thermocouples at each location

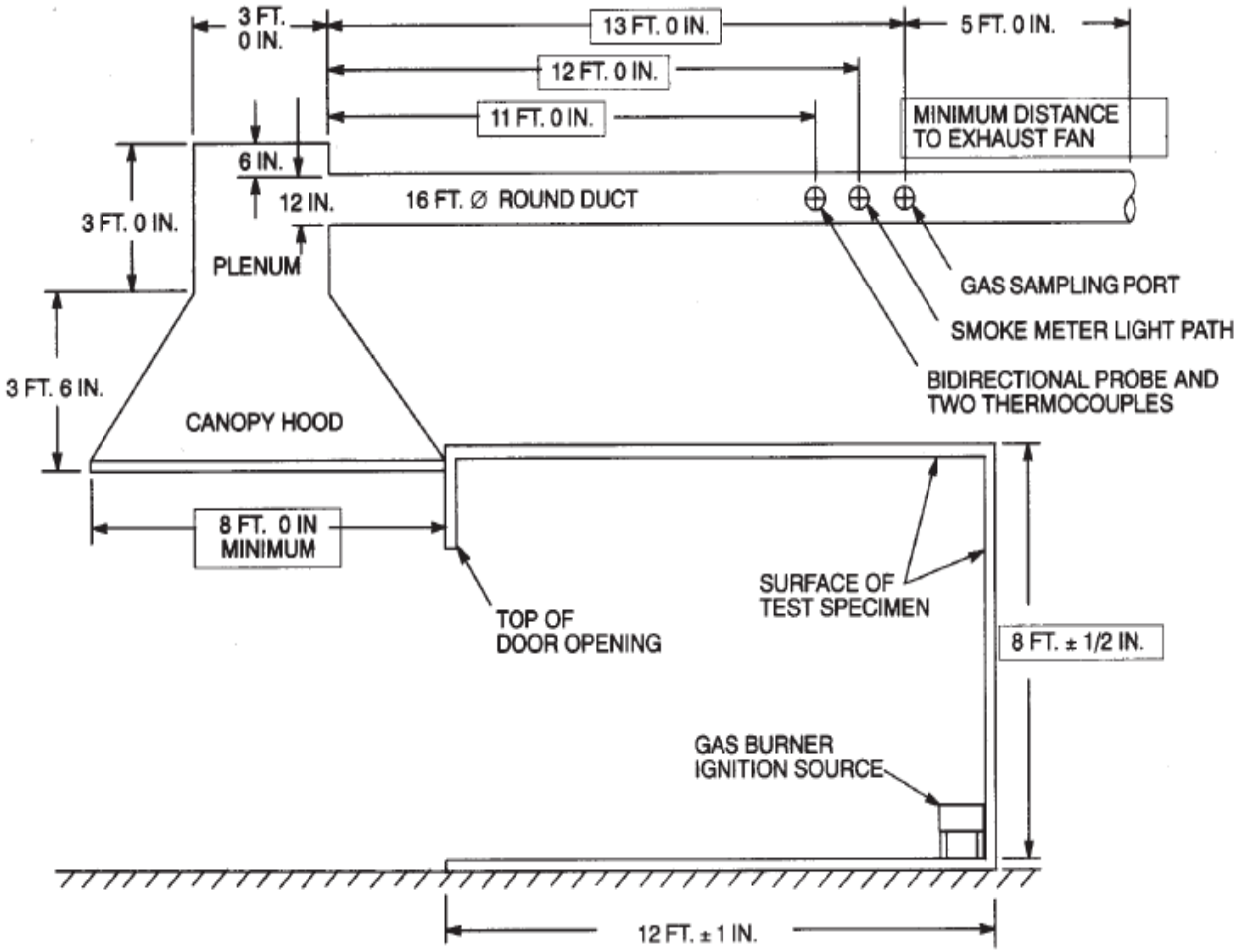

NOTES:

1. PLENUM HEIGHT MAY BE INCREASED UP TO 6 FT. TO ADJUST FOR BUILDING CONSTRAINTS.
2. SUPPORT FOR HOOD MUST NOT INTERFERE WITH AIR INFLOW TO ROOM.
3. THE EXHAUST SYSTEM MUST BE CAPABLE OF EXHAUSTING AT LEAST 5,000 SCFM. THIS MAY RESULT IN A FLOW OF UP TO 12,000 ACFM, DEPENDING ON DUCT GAS TEMPERATURE.

FIGURE 12-8-4—SECTION VIEW OF ROOM TEST APPARATUS

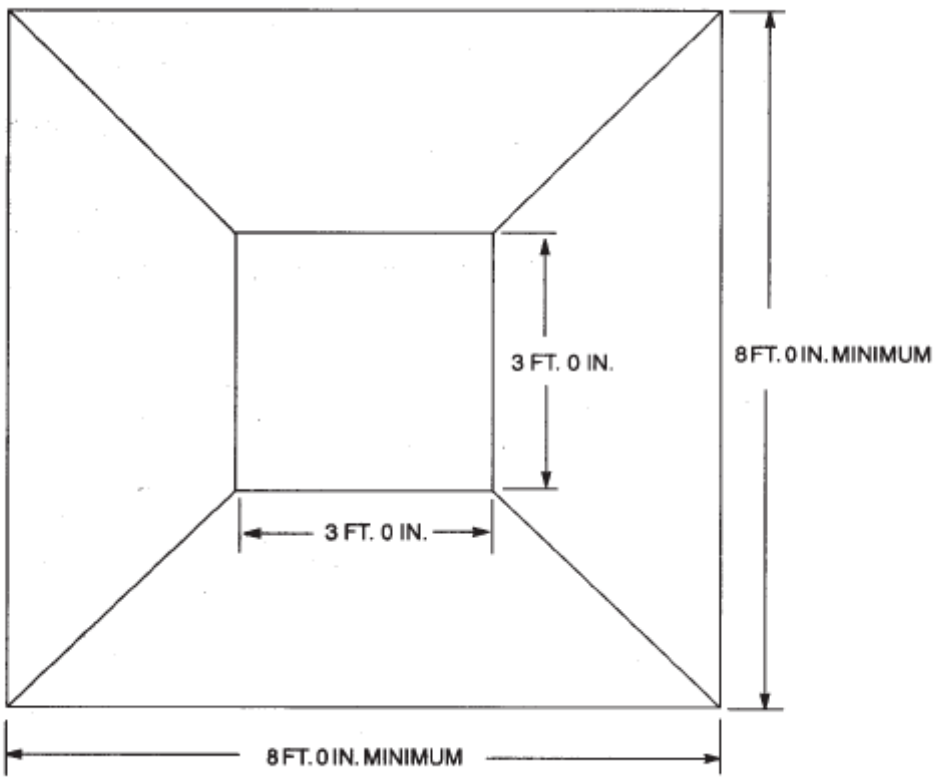

FIGURE 12-8-5—PLAN VIEW OF CANOPY HOOD

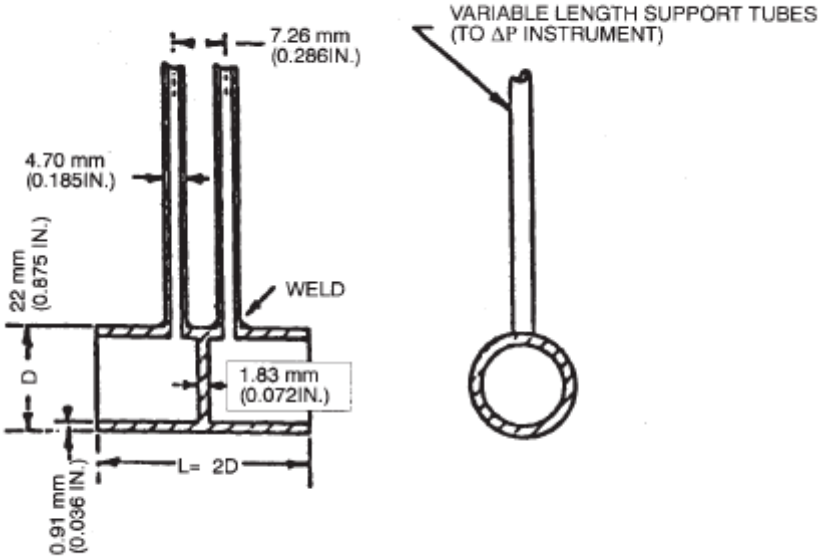

FIGURE 12-8-6—BIDIRECTIONAL PROBE

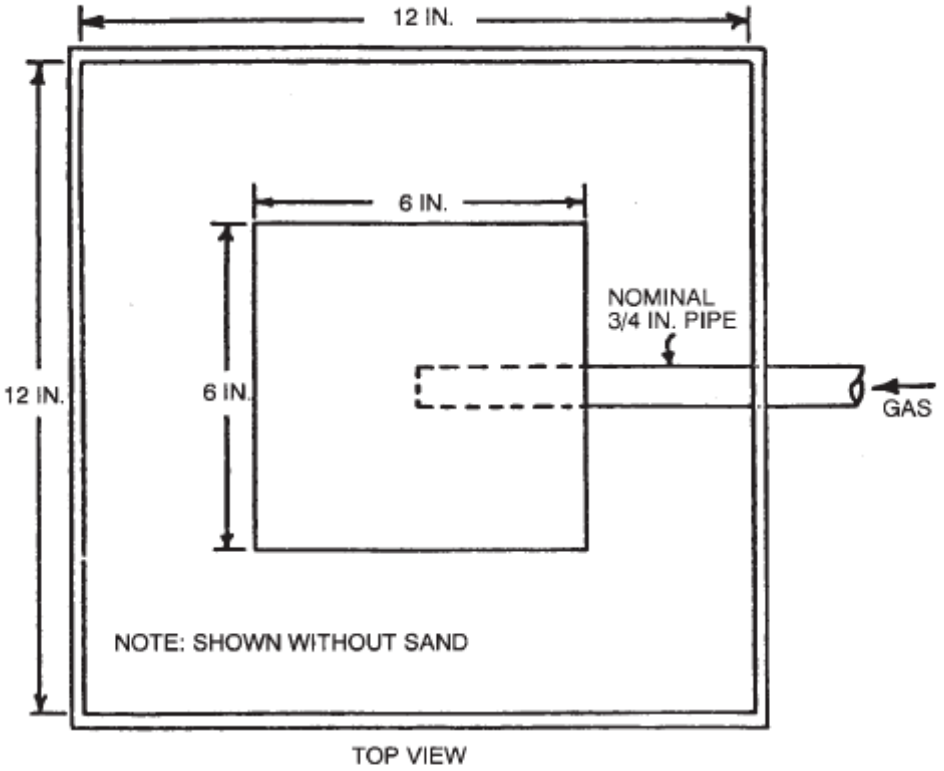

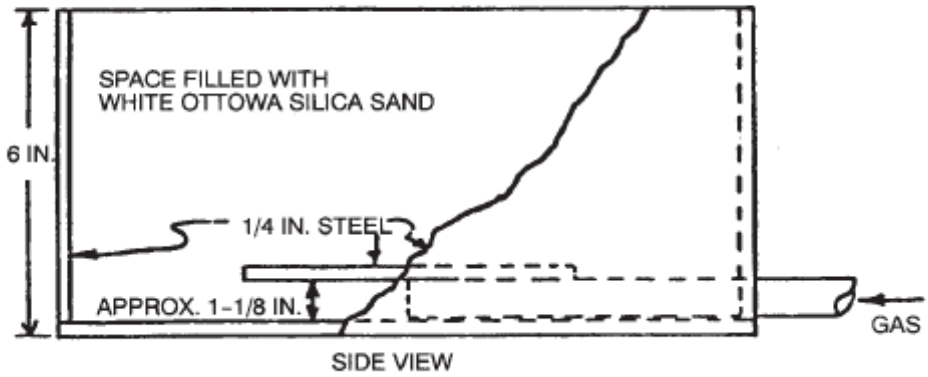

FIGURE 12-8-7—GAS BURNER

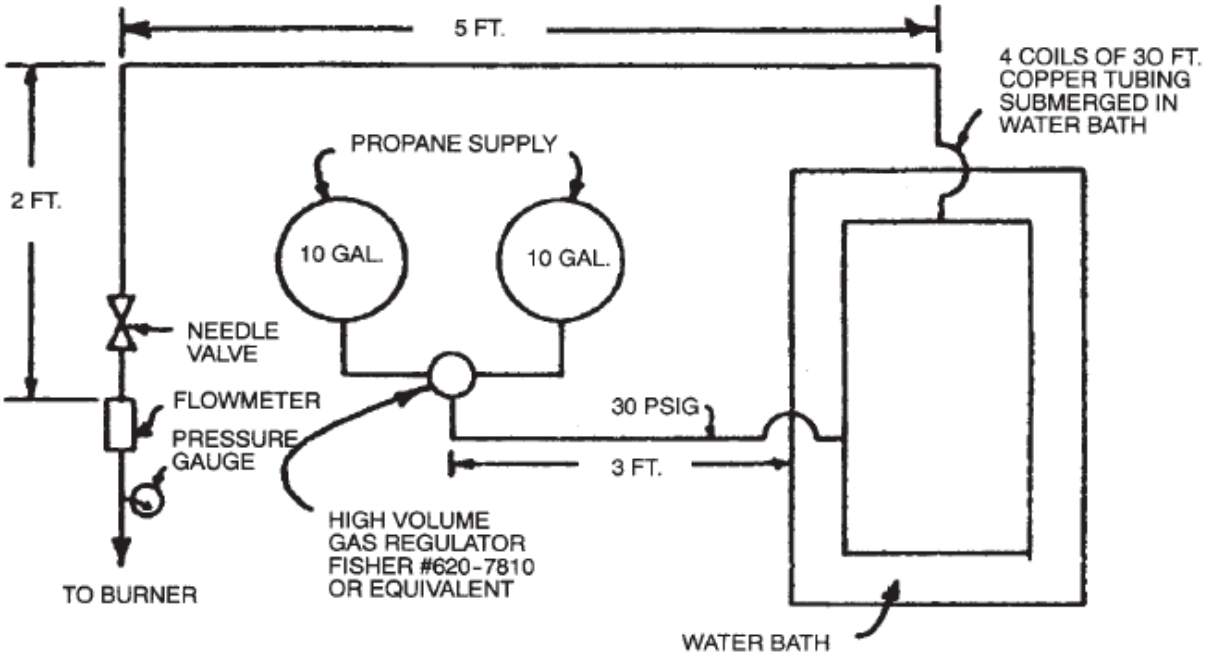

FIGURE 12-8-8—BURNER GAS FLOW CONTROL AND MEASUREMENT

APPENDIX 12-8-1A
CALCULATION OF THE TOTAL RATE OF HEAT AND CARBON MONOXIDE OR CARBON DIOXIDE PRODUCTION

The total rate of heat production is given by

$$\dot{Q} = E\phi X^{0}{}_{o_2} V_A \tag{1}$$

where:

E	=	the heat release per volume of oxygen consumed, 467 Btu/ft.^{3}
ϕ	=	the fraction of the oxygen consumed
$X^{o}{}_{o_2}$	=	the ambient molar concentration of oxygen
V_A	=	the volume flow rate of air into the system corrected to 36°F (including that which enters the room and that which passes directly into the exhaust duct).

The oxygen depletion is given by

$$\phi = \frac{M^{0}{}_{o_2} - M_{o_2}}{M^{0}{}_{o_2}} \tag{2}$$

where:

$M^{0}{}_{o_2}$	=	the molar flow rate of oxygen into the system.
M_{o_2}	=	the molar flow rate of oxygen in the exhaust duct.

The concentrations of oxygen and carbon dioxide in the analyzers are given by

$$X_{o_2} = \frac{M_{o_2}}{M^{0}{}_{N_2} + M_{o_2} + M_{co_2}} \tag{3}$$

$$X_{co_2} = \frac{M_{co_2}}{M^{0}{}_{N_2} + M_{o_2} + M_{co_2}} \tag{4}$$

where:

$M^0_{N_2}$ = the molar flow rate of nitrogen into the system.

M_{co_2} = the molar flow rate of carbon dioxide in the exhaust duct.

It is assumed that all the water is trapped out and that the only gases passing through the analyzers are nitrogen, oxygen and carbon dioxide.

Combining Equations 3 and 4 to get

$$M_{co_2} = \frac{X_{co_2} M_{o_2}}{X_{o_2}}$$

and noting that

$$X^0{}_{o_2} = \frac{M^0{}_{o_2}}{M^0{}_{N_2} + M^0{}_{o_2}}$$

Equation 3 can be solved for M_o,

$$M_{o_2} = \frac{M^0{}_{o_2}[(X_{o_2} / X^0{}_{o_2}) - X_{o_2}]}{1 - X_{o_2} - X_{co_2}} \tag{5}$$

which, when substituted into Equation 2, yields

$$\phi = \frac{X^0{}_{o_2} - X_{o_2} / (1 - X_{co_2}}{X^0{}_{o_2}[1 - X_{o_2} / (1 - X_{co_2})]} \tag{6}$$

The volumetric flow rate in the exhaust duct is given by

$$V_S = (1 - \phi)\, V_A + \phi V_A \tag{7}$$

where:

V_S = referred to standard conditions 68°F.

V_A = referred to standard conditions 68°F.

= the expansion factor, due to chemical reaction, of the air that is depleted of its oxygen.

$$= X^0{}_{N_2} + bX^0{}_{o_2} = 0.79 + 0.21b \tag{8}$$

where *b* is the ratio of the moles of combustion products formed to the moles of oxygen consumed. The value of ranges from 1.000 for carbon to 1.175 for cellulose with the plastics having values in between. In order to reduce the error incurred when unknown products are burning is taken to have an intermediate value of 1.084 which is exact for propane, the burner gas.

From Equation 7, the volumetric flow rate of air entering the system is

$$V_A = V_S/[1 + (-1)\phi] \tag{9}$$

Setting:	=	1.084
E	=	467 Btu/ft^3
$X^o{}_{o_2}$	=	0.21

Equation 1 becomes

$$\dot{Q} = \frac{E\phi X^0{}_{O2} V_S}{1+(-1)\phi} = \frac{98.1\phi V_S}{1+0.084\phi} \text{Btu/min.} \tag{10}$$

if V_S is in cfm referred to 68°F.

Setting E = 17.4 MJ/m^3

$$\dot{Q} = \frac{3.65\phi V_S}{1+0.084\phi} MW \tag{11}$$

where:

V_S = in m^3/sec, and is determined from the flow measurement in the exhaust duct
ϕ = the oxygen depletion, which is obtained from Equation 6.

When the velocity is measured with a bidirectional probe and the Reynolds number correction is taken into account, the volumetric flow rate in m^3/sec. in the duct under standard conditions is given by

$$V_S = 0.926kA\,[(2\rho/_O)\,(T_O/T)]^{\frac{1}{2}} = 20.1kA\sqrt{\rho/T} \tag{12}$$

where:

0.926	=	a suitable calibration factor for air velocities in excess of 3 ft./sec. in a 16-inch duct
k	=	the ratio of the average duct gas mass flow per unit area, as determined by measuring the velocity and temperature profiles across the stack, and the velocity and temperature at the center line where the bidirectional probe is located during the test
A	=	the cross-sectional area of the duct in m^2 at the location of the probe
ρ	=	the differential pressure measured with the probe in Pa
o	=	the density of air in kg/m^3 at the reference temperature T_o in K
T	=	the duct gas temperature in K

The volumetric flow rate can be expressed in standard cubic feet per minute (scfm) at 60°F using common engineering units by

$$V_S = 8.38 \times 10^4 kA\,[\rho/(t+459)]^{\frac{1}{2}}\,\text{scfm} \tag{13}$$

where:

A	=	given in ft^2 and in. of water
ρ	=	given in ft^2 and in. of water
t	=	the duct gas temperature in °F.

The volume flow rate of CO in m^3/sec. through the duct can be found from the formula

$$V_{CO} = \frac{0.79 V_S X_{CO}}{(1+0.084\phi)(1 - X_{O_2} - X_{CO_2} - X_{CO})} \tag{14}$$

where:

X_{CO} = the concentration of carbon monoxide measured in the analyzer.

This can be derived as follows

$$\frac{V_{CO}}{V_A} = \frac{M_{CO}}{M_{AIR}} = \frac{M_{CO}}{M_{O_2}} = \frac{M_{O_2}}{M^0{}_{O_2}} \frac{M^0{}_{O_2}}{M_A} = \frac{X_{CO} M_{O_2}}{X_{O_2} M^0{}_{O_2}} X^0{}_{O_2} \tag{15}$$

where:

M_{CO} and M_A = the molar flow rates of carbon dioxide in the duct and of the air into the system including that flowing into the room and that entering the exhaust duct directly.

The ratio of the CO and O_2 concentration in the duct are the same as in the analyzer so that

$$\frac{M_{CO}}{M_{O_2}} = \frac{X_{CO}}{X_{O_2}} \tag{16}$$

When CO is present in the sampling line, Equation 5 becomes

$$M_{O_2} = M^0{}_{O_2} \frac{(X_{O_2} / X^0{}_{O_2}) - X_{O_2}}{1 - X_{O_2} - X_{CO_2} - X_{CO}} \tag{17}$$

Equation 14 is obtained by combining equations 15, 16 and 17, letting

$$1 - X^0{}_{O_2} = 0.79, \text{ and letting}$$

$$V_A = \frac{V_s}{1 - 0.084\phi}$$

When CO is not measured, but is removed from the sample line and CO is measured, ϕ and $\dot{Q}$ are calculated as follows

$$\phi = \frac{X^0{}_{O_2} - (X_{O_2} / 1 - X_{CO})}{X^0{}_{O_2}(X_{O_2} 1 - X_{CO})} \tag{18}$$

$$\dot{Q} = [\phi - ((E'' - E')/E')((1 - \phi)/2)(X_{CO} X_{O_2})] \; E' X_{O_2} V_A (MW) \tag{19}$$

where:

E''	=	23.4 MJ/m^3
E'	=	17.4 MJ/m^3
V_A	=	m^3/sec.

referred to a 68°F base. Thus, $\dot{Q}$ becomes

$$\dot{Q} = [\phi - 0.345((1 - \phi)2) / (X_{CO} / X_{O_2})] \; 17.4 X^0{}_{O_2} V_A (MW) \tag{20}$$

When Equations 18 through 20 are used to calculate the rate of heat release, $\dot{Q}$, the carbon dioxide must be removed from the sample streams flowing through the oxygen and carbon monoxide analyzers. The removal of carbon dioxide can be accomplished by passing the sample stream through a filter of either ascarite or an aqueous solution of sodium hydroxide.

APPENDIX 12-8-1B
GUIDE TO MOUNTING TECHNIQUES FOR WALL AND CEILING
INTERIOR FINISH MATERIAL

GENERAL

Sec. 12-8-1B.1.

(a) **Basic.** This guide is intended as an aid in determining the method of mounting various building materials in the standard fire test room. These mountings are described for test method uniformity and good laboratory practice; they are not meant to imply restriction in the specific details of field installation. They are intended to be used for general material testing where the specific details of the field installation either have not been established or are so broad that any single installation method may not be representative of the full range of installation possibilities.

(b) **Mounting methods.** The suggested mounting methods are grouped according to building materials to be tested which are broadly described either by usage or by form of the material. For some building materials, none of the methods described may be applicable. In such cases, other means of attachment may have to be devised. Wherever possible, these specimens shall be mounted using the same method of attachment as that contemplated in the field installation.

(c) All backing materials, when used, shall be supported on a framed support system. A typical supporting framework is shown in Figure 12-8-1B-1.

(d) Whenever calcium silicate board or gypsum wallboard is specified as a backing substrate in subsequent paragraphs, the material shall be 0.5-inch-thick calcium silicate board supplied in 4 feet by 8 feet sheets with a density of 46 lb/ft^3, or 0.625-inch-thick gypsum wallboard “Type X” supplied in 4 feet by 8 feet sheets with a density of 42.2 lb/ft^3, and they shall be uncoated. Where metal screws in combination with washers and wing nuts are specified for fastening, they shall be standard 0.25-inch by 20 TPI round head steel machine screws, 0.25-inch by 20 TPI steel wing nuts and 2 inch O.D. by 0.044-inch-thick flat steel washers with a 0.281-inch I.D. hole. Fastening screws shall be installed as shown in Figure 12-8-1B-2. The fastening pattern is shown in Figure 12-8-1B-3 for rigid wall materials and Figure 12-8-1B-4 for flexible wall materials. The fastening pattern for all ceiling materials is shown in Figure 12-8-1B-5.

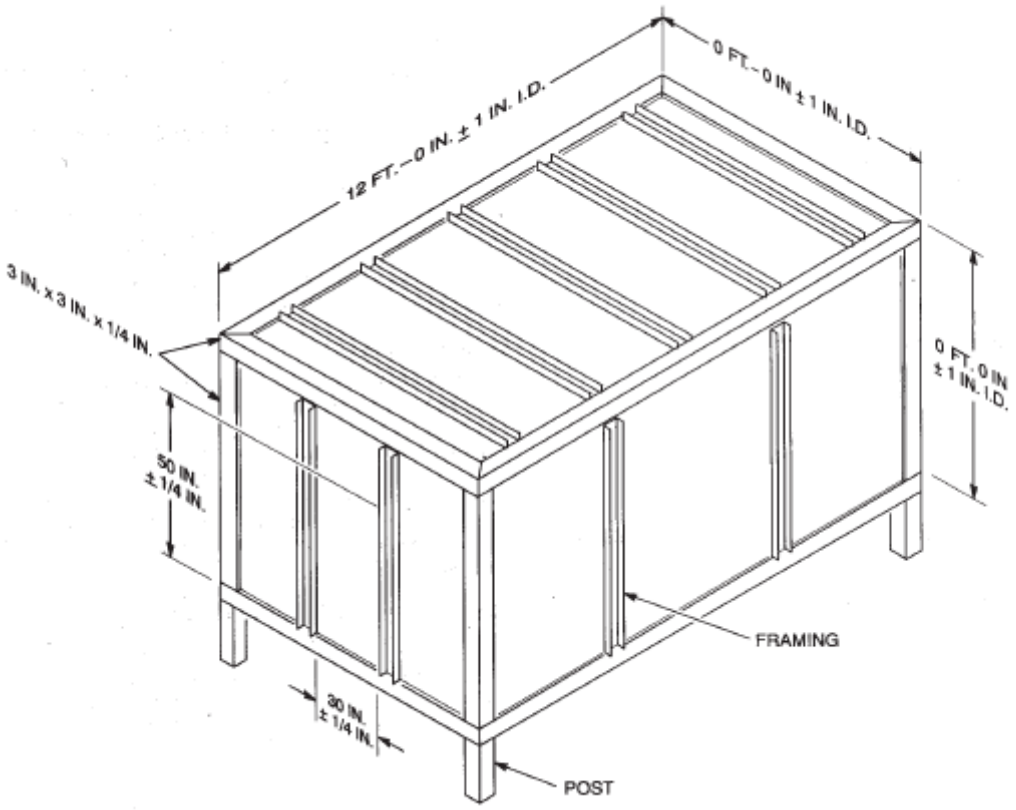

FIGURE 12-8-1B-1—TYPICAL STEEL FRAME SUPPORT SYSTEM

ACOUSTICAL MATERIALS AND OTHER BOARD MATERIALS

Sec. 12-8-1B.2.

(a) Depending on the type of field mounting required by the acoustical product, either wood furring strips or metal runners are to be used to support acoustical material.

(b) Wood furring strips for mounting acoustical materials and other board materials are to be nominal 1-inch by 2-inch wood furring strips and attached to a gypsum wall board substrate to approximately the field installation.

(c) Metal runners for mounting are to be attached to the 0.625-inch gypsum wallboard substrate to approximate the field suspension systems application.

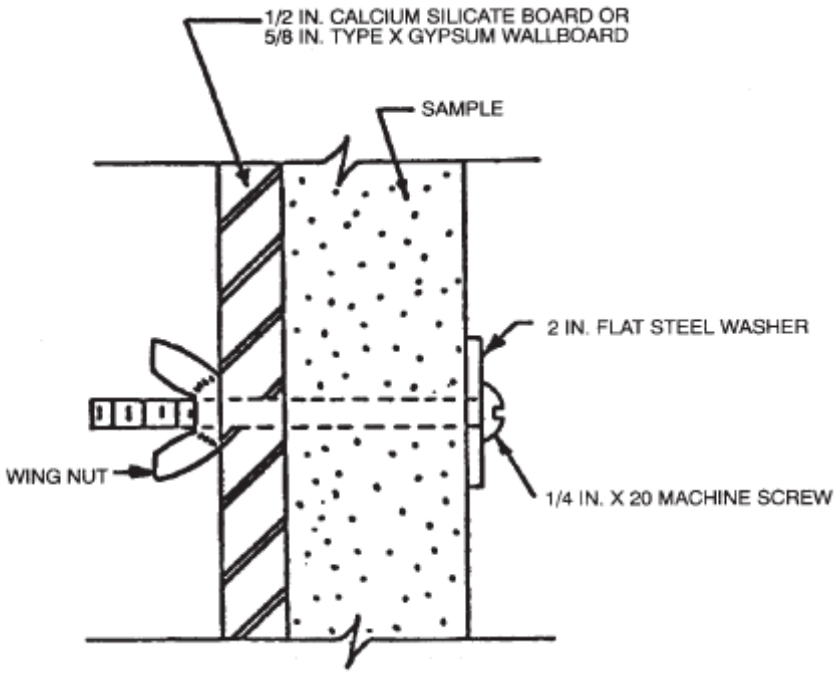

FIGURE 12-8-1B-2—MATERIAL FASTENING TECHNIQUE

BATT OR BLANKET-TYPE INSULATING AND OTHER FLEXIBLE MATERIALS

Sec. 12-8-1B.3.
Batt or blanket and other flexible materials which do not have sufficient rigidity or strength to support themselves are to be supported by round head machine screws in combination with wing nuts and flat washers, as specified in Section 12-8-1B.1 (d), which are inserted through the material in such a way as to fasten the material to a substrate board.

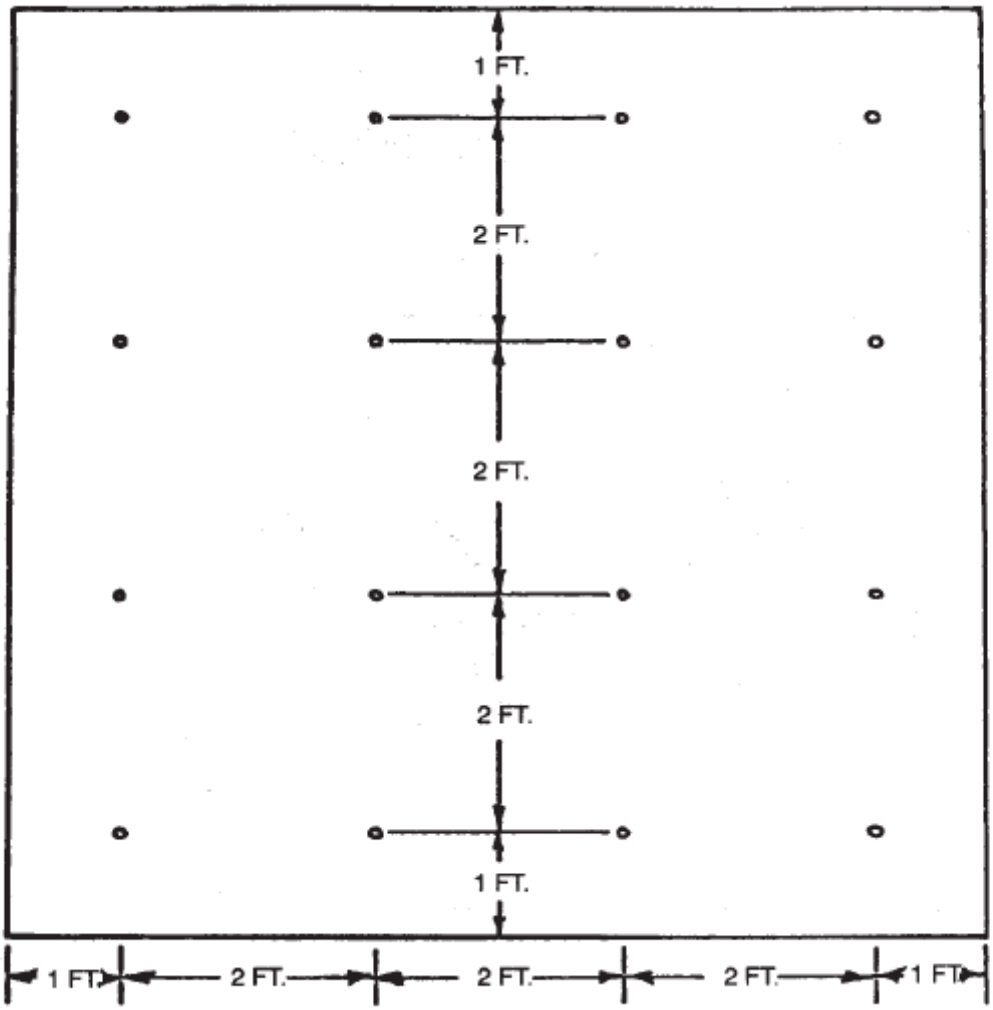

FIGURE 12-8-1B-3—TYPICAL MOUNTING TECHNIQUE FOR RIGID WALL MATERIALS

Note: When required, additional fasteners may be used to hold up the specimen flush to the wall.

BUILDING UNITS

Sec. 12-8-1B.4.
Materials falling within this category include organic and/or inorganic materials formed or laminated into blocks, boards, planks, slabs or sheets of various sizes, thicknesses or shapes. If building units have sufficient structural integrity to support themselves, no additional mounting to a substrate board support is required. If the building units are of such construction as to require individual components and are not self-supporting, the component is to be fastened to the substrate board as specified in Section 12-8-1B.1 (d).

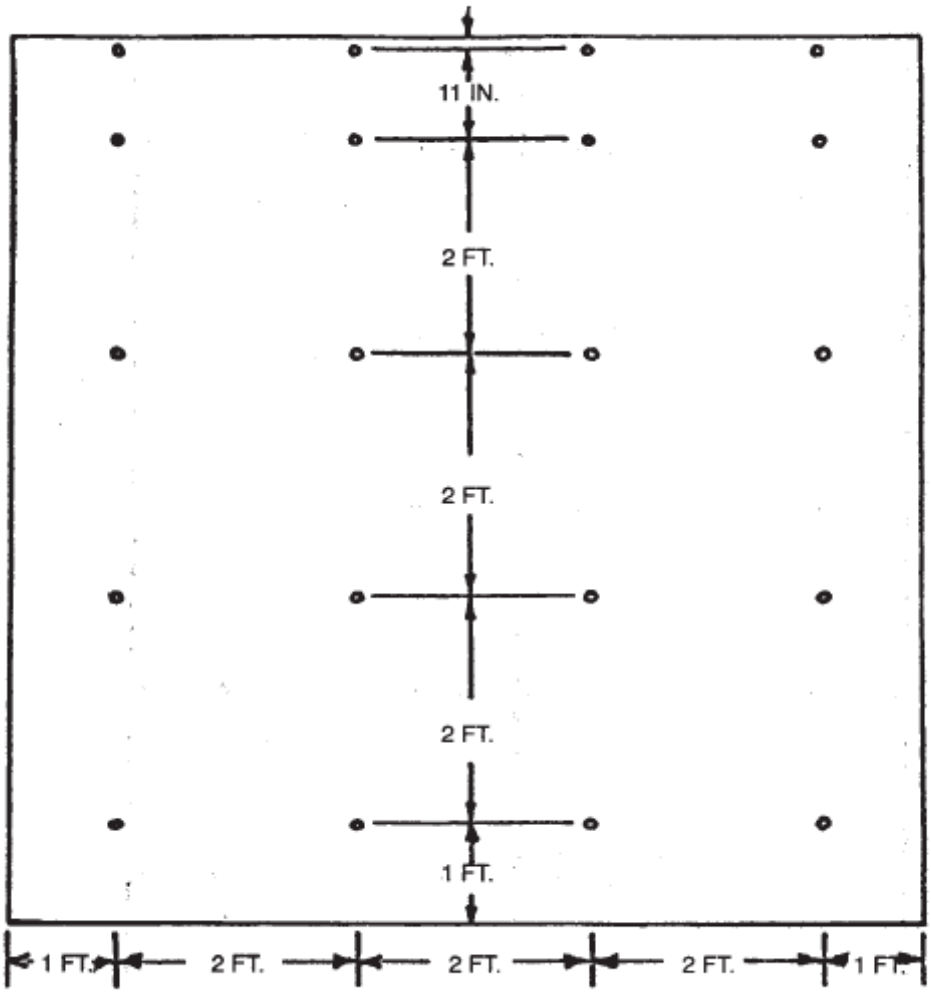

FIGURE 12-8-1B-4—TYPICAL MOUNTING TECHNIQUE FOR FLEXIBLE WALL MATERIALS

Note: When required, additional fasteners may be used to hold up the specimen flush to the wall.

COATINGS OR SPRAY APPLIED MATERIALS

Sec. 12-8-1B.5.

(a) Coating materials, such as cementitious mixtures, mastic coatings, sprayed fibers, etc., are to be mixed and applied to the substrate board as specified in the manufacturer's instructions at the thickness, coverage rate or density recommended by the manufacturer.

(b) Materials intended for application to a wood surface are to be applied to a substrate made of 1 inch by 4 inches nominal "C" and better VG Douglas fir flooring (FSC 70 to 90) or to other species for which the surface burning characteristic is to be measured.

(c) Coating materials intended for application to particular combustible surfaces, but not wood, are to be applied to the specific surface for which they are intended. The coating material and combustible material are to be attached to the substrate board as specified in Section 12-8-1B.1 (d).

(d) Coating materials intended only for field applications to nonflammable surfaces are to be applied to 0.5 in calcium silicate board.

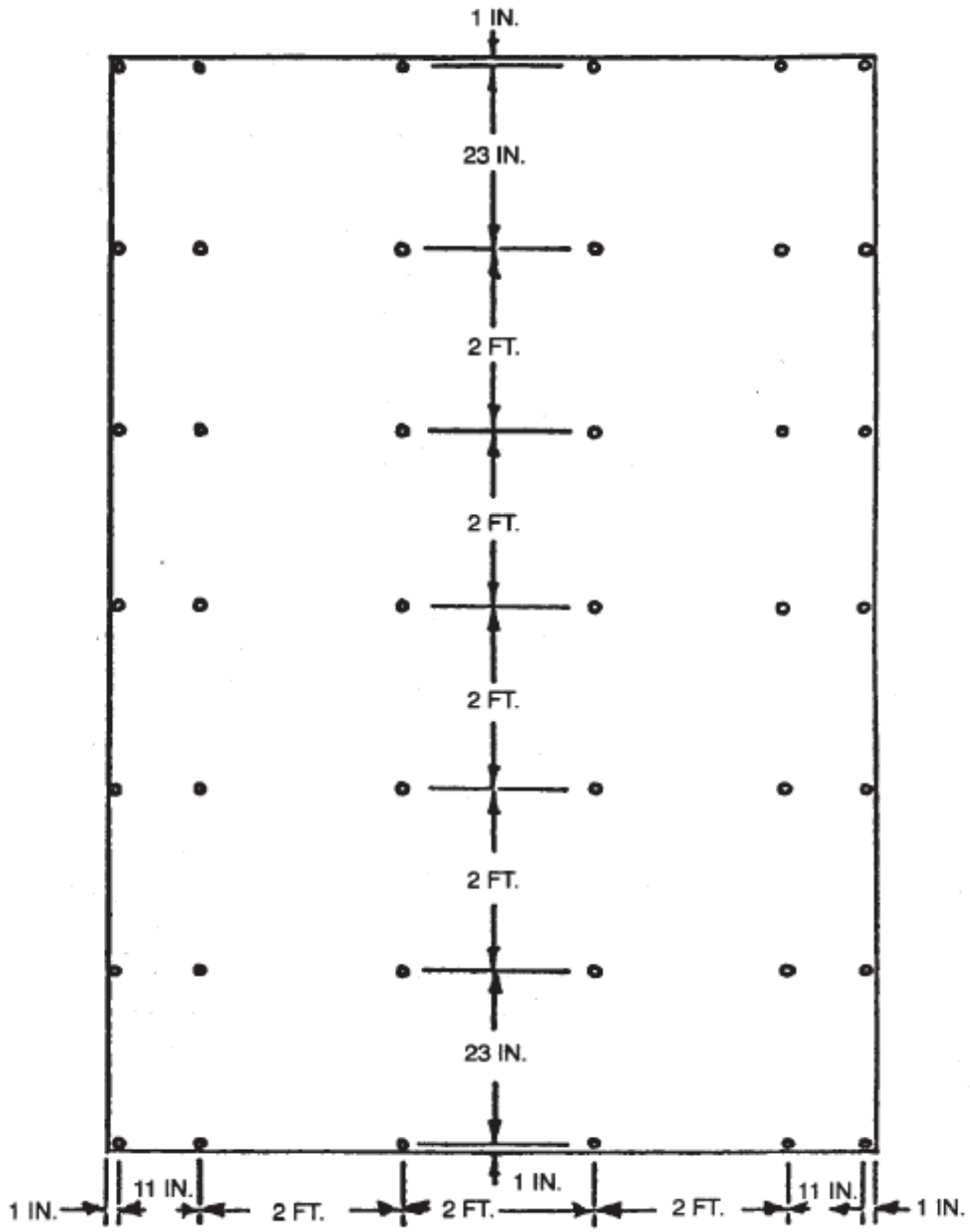

FIGURE 12-8-1B-5—TYPICAL MOUNTING TECHNIQUE FOR CEILING MATERIALS

WALL COVERING MATERIAL

Sec. 12-8-1B.6.
Wall coverings such as vinyl coatings, wallpaper, etc., of various types are to be mounted on 0.625-inch gypsum wall board or on the actual substrate to which they are to be applied, using the adhesive and application technique specified by the manufacturer.

CHAPTER 12-10-1
EXITS

POWER-OPERATED EXIT DOORS
STANDARD 12-10-1

STATE FIRE MARSHAL

SCOPE

Sec. 12-10-100.

(a) **General.** These requirements and methods of test apply to power operated: swinging doors, and combination sliding and swinging doors intended for installation in locations where conforming exits are required by Title 24, California Code of Regulations, Part 2, Chapter 10.

(b) Power-operated doors described in (a) may be provided with air, hydraulic or electric operators actuated from a floor, activating carpet, photoelectric device or other approved signaling device.

(c) **Alternates.** A product employing materials or having forms of construction differing from those described in this procedure may be examined and tested in accordance with the intent of these testing procedures and, if found to be substantially equivalent, may be recognized for listing.

(d) **Application.** The minimum design, construction and testing procedures set forth herein are those deemed as the minimum necessary to establish conformance to the regulations of the State Fire Marshal contained in Title 24, California Code of Regulations.

(e) **Fire door assemblies.** Power-operated doors intended for installation in openings where listed fire door assemblies are required, shall in addition to the requirements of this standard, be tested in accordance with the Fire Door Assembly Tests, SFM 12-7-4.

GENERAL

Sec. 12-10-101.

(a) **Panic hardware.** Power-operated doors intended for installation in openings where panic hardware is required shall be tested with listed panic hardware on the doors.

(b) **Glazed doors.** Glazing of doors shall conform to Title 24, California Code of Regulations, Part 2, Chapter 7.

(c) **Opening degree.** Where manually operated in the direction of egress, leaves of swinging doors or swing-out sections of sliding doors shall swing open to not less than 90 degrees from the closed position.

(d) **Locking mechanisms.** Locking mechanisms on doors intended for locations which do not require panic hardware shall be of a type readily identified as locked, and the doors shall be posted with durable, permanent signs reading “THESE DOORS TO REMAIN UNLOCKED WHENEVER THE PUBLIC IS PRESENT.” Signs shall be 1-inch-high block letters on a contrasting background. Signs shall be located on the header framing.

(e) **Swinging and sliding doors.** Each swing-out leaf of swinging or sliding doors with swinging sections shall be provided with durable signs in not less than 1-inch block letters on contrasting background wording, “IN EMERGENCY, PUSH TO OPEN,” or other approved wording. The sign shall be located at the closing edge of the door not less than 36 inches or more than 60 inches above the floor. The sign shall read horizontally and be in two lines.

Illuminated exit signs when required by other provisions of the basic building regulations shall be installed above the header. Wiring and circuit arrangement shall conform to the provisions of the *California Electrical Code*.

(f) **Electrical wiring and devices.** Electrical wiring, electrical devices, and controls shall be of a type tested and listed in conformance with the standards established by the *California Electrical Code*, or shall be tested for conformance with the testing procedures approved by the State Fire Marshal.

(g) **Testing.** Doors with power operators shall be examined and tested by a testing laboratory approved by the State Fire Marshal, or tests shall be conducted by a qualified independent fire protection engineer, acceptable to the State Fire Marshal.

(h) **Test report.** The test report shall contain engineering data and drawings; size and weight of door tested; wiring diagrams of electrical control systems; schematic drawings of mechanical controls; and operating manuals. The report shall describe the mechanical operation of the power operator in sequence as the door(s) open and close under normal and emergency conditions. The report shall set forth the tests performed in accordance with the provisions of this standard and the results thereof. The report shall additionally contain an analysis comparing each feature of the design against the performance test procedures contained herein.

(i) **Simulated installation and test equipment.** Doors with power operators shall be installed in a simulated wall and door framing assembly in accordance with the manufacturer’s instructions. The test specimen shall be not less than 3 feet wide by 7 feet high. A motor-driven or suitable mechanism shall be used to actuate the activating carpet. The rate of operation or number of cycles shall be 3 to 5 per minutes. On sliding doors with a swing-out section additional operating endurance tests shall be conducted. A motor-driven mechanism or other approved means shall be used to push the swinging door section open and pull the swinging section closed at a rate of 3 to 5 cycles per minute, so that the latching mechanism and disconnect switches operate as in service. During the test the door specimen shall have only the

lubrication which is provided by the manufacturer at the factory, or as may be recommended by the manufacturer in his installation instructions.

(j) **Endurance tests.** The power operator shall function as intended to open and close the door(s) for 100,000 cycles of operation without failure or excessive wear of parts. The release mechanism and disconnect switches of the swinging section in sliding doors shall function as intended for 250 cycles of operation without failure or excessive wear of parts. The opening and closing forces, and the speed of opening and closing shall be recorded at the start of the endurance tests, and shall again be recorded at the end of the endurance tests. Opening and closing forces at the beginning and at the end of the endurance test shall not exceed the maximum forces prescribed in these procedures.

HISTORY:

1. Editorial correction (Register 71, No. 52 errata sheets).

SWINGING DOORS

Sec. 12-10-102.

(a) Each door opening when the door(s) is in the 90-degree open position, shall provide a clear opening width of not less than 28 inches, with no single leaf less than 24 inches in width.

(b) **Doors in pairs.** Doors in pairs shall be equipped with a separate operator for each leaf unless tests with a tandem operator with one leaf jammed in a closed and in a partially open position indicates that the second leaf continues to operate or is free to swing into the open position without exceeding the maximum permitted manual opening pressures. On doors with mechanical controls, one mechanism shall be subjected to fault conditions; during the fault condition the second leaf shall be openable manually without exceeding the maximum permitted opening pressure.

(c) **Closing mechanism.** Normal closing of doors shall be by spring action, pressure-operated mechanism or electrically driven mechanism. The closing force measured at the closing stile shall not exceed 40 pounds at any point in the closing arc. The final 10 degrees of closing shall be not less than $1^{1}/_{2}$ seconds.

(d) Each possible fault condition that affects the power supply shall be introduced into the door and power-operator assembly. Under each fault condition, single doors and each leaf of doors in pairs shall open to the 90-degree position with an applied pressure at the normal location at the push plate not exceeding 40 pounds.

(e) **In-swinging doors.** Power-operated in-swinging doors are not recognized in determining exit width opening required to swing in the direction of egress.

(f) **Activating carpets and safety mats.**

1. When carpets are used as the activating device, they shall have a width[1] not less than 10 inches less than the clear width of the door opening with the centerline of the carpet in the centerline of the door opening.

2. The length[2] of activating carpets shall be not less than 42 inches. The length of activating carpets for doors exceeding 42 inches in width shall be not less than 56 inches.

3. Doors serving one-way traffic only shall be provided with a safety mat[3] having a length not less than the width of the widest leaf.

4. Doors serving both egress and ingress shall have a series of joined carpets on the swing side of the door arranged as follows:

   A. One safety carpet or mat nearest to the door at least as long as the width of the door leaf;

   B. One or more activating carpets to provide a total carpet length on the swing side of not less than $2^1/_2$ times the width of the widest door leaf.

HISTORY:

1. Editorial correction (Register 71, No. 52 errata sheets).

SLIDING DOORS

Sec. 12-10-103.

(a) **General.**

1. Sliding leaves of sliding doors shall be provided with swinging sections arranged to swing in the direction of egress when pressure is applied at the location of normal push plates or on the crossbar of panic hardware on doors where panic hardware is required.

2. Operation of the swinging section shall disconnect the sliding door power operator.

3. Permanent stops shall be provided to prevent double swing.

4. Location of the breakway tension adjustment, opening and closing speed adjustment, opening and closing snub speed adjustments, opening and closing power pressure adjustments, and similar controls shall be concealed and not readily accessible where they may be subject to tampering.

5. Doors shall be suspended from overhead track. Operators, control levers or mechanisms shall be guarded.

(b) **Closing mechanism.** The closing force of sliding doors at 24 inches of opening shall not exceed 30 pounds with a closing speed not in excess of 1.5 feet per second.

(c) **Opening width.** The minimum clear width of the door opening with the swinging section, or sections in the 90-degree open position shall be not less than 28 inches with no single leaf less than 24 inches in width.

(d) **Opening forces.** The swinging section in sliding doors shall swing open into the full open position when an opening force not exceeding 40 pounds is applied at the normal push plate location or on the crossbar of panic hardware.

(e) **Fault condition introduced.** Under each possible fault condition that affects the power supply with the sliding leaf or leaves retracted one-half the leaf width into its or their pocket(s) each swinging section shall open to the 90-degree position with an applied pressure at the normal location of the push plate not exceeding 40 pounds.

(f) **Sliding doors without swing-out section.** Power-operated sliding doors which are not provided with a swing-out section may be evaluated for conformance to the mechanical requirements and endurance tests provided in this standard. Power-operated sliding doors which are not provided with a swing-out section shall not be listed for use in locations where required exits are specified in Part 2, Title 24, California Code of Regulations.

(g) **Activating carpets, safety mats.** Activating carpets and safety mats shall conform to Section 12-10-102 (f).

1 Width: Shall be measured between the exposed edges of the carpet tread surface excluding molded edge bevels or aluminum edge trim.

2 Length: Shall be measured from the centerline of the doors pivot to the exposed edge of the carpet tread surface excluding molded edge bevels or aluminum edge trim.

3 Safety Mat: A safety mat is one that will prevent the door from opening if there is pressure on the safety mat before pressure is applied to the activating mat, and one that will prevent the door from closing following normal door actuation until pressure on the safety mat is removed.

MARKING

Sec. 12-10-104.
The name of the manufacturer, or trademark by which the manufacturer can be readily identified, shall be legibly marked on the operating equipment where it can be seen after installation. The type, model number or letter designation identifying the product as a listed device shall be provided on a label attached in a location as indicated in its listing.

CHAPTER 12-10-2
EXITS

SINGLE-POINT LATCHING OR LOCKING DEVICES
STANDARD 12-10-2

STATE FIRE MARSHAL

SCOPE

Sec. 12-10-200.

(a) **Builders hardware, exit doors.** These design requirements and testing procedures apply to builders hardware, single-point latches and locks, intended for use on required means of egress doors in other than Group R and M Occupancies with an occupant load of 10 or less. It is the intent that devices designed and tested in accordance with these procedures will develop data to enable the State Fire Marshal to determine the suitability of latches and locks on means of egress doors. Alternate designs and materials may be submitted with substantiating test data. If, after evaluation, devices are found to comply with the intent of these procedures, they may also be recognized for approval and listing by the State Fire Marshal.

(b) **Fire doors.** Builders hardware single-point latches and locks intended for use on doors bearing a fire-retardant classification shall also conform to the construction standards and performance tests specified in Fire Door Assembly Tests, SFM 12-7-4, Section 12-7-400.

(c) **Listing by approved listing agency.** Listing by an approved listing agency shall not be construed as necessarily indicating compliance in all respects with the requirements of these design requirements and test procedures for single-point latching or locking devices. The test report of the approved listing agency may be filed for review and after evaluation, if it is found to provide evidence of conformance, the single-point latching or locking device may be recognized for approval and listing.

(d) **Definitions.**

1. **Inside knob.** Inside knob means the knob, lever, bar or paddle on the side of the door which must be turned or depressed to unlatch or unlock the door to permit egress.

2. **Outside knob.** Outside knob means the knob on the corridor side of room to corridor doors, or the knob on the exterior side of a door leading to the exterior.

INSTRUCTIONS

Sec. 12-10-201.
Approved installation instructions shall be provided by the manufacturer. Instructions shall be

illustrated and shall include directions and information adequate to ensure proper and safe installation of the device.

DESIGN

Sec. 12-10-202.

(a) **Finish.** Builders hardware shall have a smooth finish with no sharp or burred edges. Knobs may be knurled or have an abrasive finish for ease of turning or identification as may be required. Strikes shall be plain with curved lip. Strike and lip extending beyond jamb have rounded corners.

(b) **Knob, lever or "T" handle actuated.** Single-point latch bolts and/or dead bolts shall be retracted from the strike to release the door by a knob, lever or "T" handle with not to exceed $^{1}/_{4}$ turn. A thumb piece or thumb turn is not acceptable for this purpose.

(c) **Tested design.** Builders hardware single-point latching or locking devices shall be designed to retract the latch bolt and/or dead bolt after application of the horizontal forces and the endurance tests without exceeding the releasing torque specified in 12-10-204 (h).

(d) **Knobs.** Knobs shall have a minimum diameter of 2 inches and a maximum diameter of $2^{3}/_{4}$ inches.

(e) **"T" handle.** "T" handles shall be oval-shaped and have minimum dimensions of $1^{3}/_{4}$ inch by 1 inch at center portion with $1^{1}/_{4}$ inch projection.

(f) **Levers.** The lever of lever actuated latches or locks shall be curved with a return to within $^{1}/_{2}$ inch of the door to prevent catching on the clothing of persons during egress.

(g) **Self-releasing knob.** The inside knob shall be free at all times. Any locking, stopworks, or shut-out mechanism shall not prevent retracting the latch bolt or dead bolt to release the door by turning of the inside knob, or "T" handle, or depressing the inside lever, bar or paddle.

(h) **Dead bolt operation.** Operation of the inside knob shall retract both latch bolt and dead bolt simultaneously. The opening in the strike shall be of such dimensions that when the flat of the latch bolt is forced against the edge of the latch hole there shall be no pressure against the side of the dead bolt.

(i) **Springs.** Retraction of the latch bolt and/or dead bolt shall not depend on springs.

(j) **Backset.** Backset shall be not less than $2^{3}/_{4}$ inches or more than 5 inches.

(k) **Throw.** Latches shall have a minimum latch throw of $^{1}/_{2}$ inch. Latches intended for use on fire endurance rated doors shall also conform to the requirements of SFM 12-7-4, Section 12-7-400, Fire Door Assembly Tests.

(l) **Roller latches.** Roller latches intended for use on room to corridor doors shall have a minimum projection of $^{3}/_{8}$ inch excluding any coating or sound deadening material. Stops or staking shall be provided to provide a minimum projection of $^{1}/_{8}$ inch. Spring design shall be such as will require an opening force of 20 pounds when the roller projects $3^{1}/_{6}$ inch in a door and frame with $^{1}/_{8}$ -inch jamb clearance. Adjustment of the roller projection shall not be possible from the front of face plate.

CONSTRUCTION MATERIALS

Sec. 12-10-203.

(a) **Cases, interior working parts.** Cases, latch or lock enclosures, and interior working parts shall be of brass, bronze, steel, monel, stainless steel or of materials equivalent in mechanical strength to brass or bronze. Cases of mortise locks may be of cast iron.

(b) **Latch bolts, strikes.** Latch bolts and strikes shall be of brass, bronze, monel, stainless steel or materials equivalent in mechanical strength having corrosion resistance equivalent to brass or bronze.

(c) **Corrosion resistance.** Cases, enclosures and internal working parts shall have corrosion resistance equivalent to cadmium plating not less than 0. 00015 inch thick or zinc plating not less than 0.0004 inch thick, or processed to give equal corrosion resistance as determined by comparison in salt fog atmosphere per ASTM Method B-117.

(d) **Nonmetallic materials.** Nonmetallic materials may be used as coatings or for wearing surfaces, rollers, and finishes, and antifriction inserts, or for similar purpose if the material otherwise conforms to these requirements.

(e) **Springs.** Component springs used in the assembly of a latch or lock shall be of material having spring properties equivalent to stainless steel conforming to ASTM A 313.67.

ENDURANCE AND PERFORMANCE TEST PROCEDURES

Sec. 12-10-204.

(a) **Testing laboratory.** Tests shall be conducted at a testing laboratory approved by the State Fire Marshal, or tests shall be conducted by a qualified independent fire protection engineer, acceptable to the State Fire Marshal, in testing facilities acceptable to the State Fire Marshal.

(b) **Report.** The test report shall include a detailed description of the latch or lock and its intended function; engineering data, shop drawings and photographs; identification of materials as to source, composition, strength and corrosion resistance; the physical or chemical tests including dimensions of parts before and after the endurance tests establishing conformance of materials. The report shall include the manufacturer's installation instructions. The report shall be verified by the laboratory or fire protection engineer responsible for the conduct of the test. The test report and evidence of listing by an approved listing agency may be provided for the applicable portions of these endurance and performance test procedures. Test reports prepared for other governmental agencies may be utilized to the extent that the test procedures contained herein have been duplicated.

(c) **Test latches or locks.**

1. **Samples.** Samples of the test latch or lock shall be selected by the testing agency or fire protection engineer at random from the manufacturer's current production runs. The types tested shall be considered to represent, for purposes of approval and listing, all lock types of a series, except that when there are variations of basic mechanical design and/or materials for mechanical parts, each variation shall be tested for compliance with the minimum performance test procedures.

2. **Modifications in design or test procedure.** Devices involving dead-locking bolts, lever handles, shear pins in the outside know or other variations in design may require modifications in the test procedure in order to simulate the intended in-service conditions. Requests for modifications in the design and test procedures shall be filed for evaluation and approval by the State Fire Marshal before proceeding with the test.

(d) **Test equipment.**

1. **Static loading.** The static loading apparatus used for the torque loading, axial load, vertical load and releasing torque tests shall consist of frame, test door and test block as detailed in Figure 12-10-2-1. Except as shown, materials shall be of steel, welded or bolted. The test apparatus may be of alternate design and construction having equivalent or greater rigidity.

2. **Endurance test.** Apparatus for the endurance test shall consist of frame and test door as shown in Figure 12-10-2-2. An alternate design having equivalent or greater rigidity may be utilized. Alternate designs utilizing components of greater dimensions or greater rigidity may affect details of the approval and listing.

3. **Test equipment.** Torque wrenches, spring scales, hydraulic or pneumatic pressure scales, or other instruments shall be calibrated in an approved manner.

(e) **Torque loading test.** Each latch or lock shall be installed in a $1^{3}/_{4}$-inch thick test block in accordance with the manufacturer's installation instructions. The test block shall be installed in the static loading test fixture. The torque load shall be applied to the inside door knob or lever. The knob or lever shall be turned or depressed to fully retract the latch bolt or dead bolt before application of the torque load. The applied torque load shall be 300 inch-pounds. After removal

of the torque load the latch shall automatically return to its latch position, the dead bolt shall be extended to its locked position.

Subsequent hand turning of the knob or depressing the lever shall retract the latch or dead bolt. Three representative latches and/or locks shall be tested and there shall be no failures.

(f) **Axial load.** Each latch or lock shall be installed as described in Section 12-10-204 (e). A hydraulic loading device or load dynamometer shall be applied first to the outside knob and then to the inside knob or lever so that the force applied to the knob or lever is in line with the axis of the spindle. The axial load applied alternately to the outside knob and inside knob or lever shall be 500 pounds. Neither knob nor lever shall pull off under the axial load. Three representative latches and/or locks shall be tested and there shall be no failures.

(g) **Vertical load test.** Each latch or lock shall be installed as described in Section 12-10-204 (e). Each latch or lock shall be subjected to a vertical downward force applied perpendicular to the spindle axis through a sling which shall conform to the knob shape. A vertical downward force of 350 pounds shall be applied first to the outside knob and then to the inside knob or lever. Neither knob nor lever shall break off under the downward force. Three latches or locks shall be tested and there shall be no failures.

(h) **Releasing torque test.** A latch or lock set shall be installed as described in Section 12-10-204 (e). A hydraulic or pneumatic loading device shall be used to apply a horizontal force of 50 pounds against the latching edge of the test block 3 inches above and in the vertical center of the latch or lock spindle in such a direction that the flat of the latch bolt is forced against the edge of the latch hole in the strike. After not less than 25 unlatchings under the above-prescribed load not more than 30 inch-pounds of torque on the inside knob in either direction or 15 pounds of downward pressure on an inside lever shall be required to retract the latch bolt. After 100,000 cycles of the endurance test as described in Section 12-10-204 (i), the torque or downward pressure necessary to retract the latch bolt shall not exceed the above-prescribed limits.

(i) **Endurance test.** Five latches or locks shall be subjected to an accelerated endurance test as provided in this subsection. The locks shall be installed in the door of the endurance testing apparatus in accordance with the manufacturer's installation instructions. The latch or lock shall be operated to retract the latch, open the door, and close the door at a rate of approximately 10 cycles per minute. A cycle shall consist of the following:

1. Turn the inside knob to retract the latch bolt.

2. Open the door after the latch bolt is restricted to clear the strike.

3. Release the knob allowing the latch bolt to return to its extended position by action of its own spring.

After insertion of the latches or locks in the test door the torque in inch-pounds necessary to fully retract the latch bolts shall be recorded. The torque shall be the average recorded for the five latches or locks. Each sample shall be subjected to 800,000 operating cycles as described above. Each latch shall continue to extend itself per cycle 3 above throughout the test. At the end of the endurance test the torque to retract the latch bolts of any four latch bolts shall not exceed two times the initial average torque. If two latches fail to operate successfully at the end

of the test or the torque of any four latches exceeds two times the initial average torque, an additional five latches or locks shall be subjected to the endurance test and the torque of any seven latches shall not exceed two times the initial average torque.

(j) **Roller latches.**

1. **Fire test.** Roller latches shall be installed in a composite test fire door in accordance with the manufacturer's installation instructions and subjected to the fire test as described in SFM 12-7-4, for a period of 30 minutes. The latch shall be adjusted to an opening pressure of 20 pounds applied to the closing edge immediately above the latch. Throughout the test the latch shall require an applied pressure of 20 pounds to open the door.

2. **Endurance test.** Five samples of the roller latch shall be subjected to the endurance test as described in Section 12-10-204 (i). The latch shall continue to extend the roller throughout the test without any failure. The opening pressure at the end of the test shall not be less than 15 pounds.

3. **Installation.** Doors utilizing roller latches shall be installed in doors hung in steel frames only. Frame jambs shall be anchored to the floor to prevent spreading of the jambs. In other than concrete fill floors the jambs shall be anchored to a steel sill or steel floor plate extending between the jambs to prevent spreading of the frame. Horizontal bracing shall be provided in the wall in back of the strike.

THICKNESS OF COATINGS TESTS

Sec. 12-10-205.
The thickness of cadmium, zinc or bronze plated coatings applied for corrosion resistance may be determined by either of the following methods:

1. Cross sections of coated samples cut at 90 exposed edges polished and thickness measured with a suitable microscope and scale.

2. Dropping test of a suitable reagent at a definite rate until coating is penetrated. The thickness is calculated from the known characteristics of the reagent at the observed temperature and time required for the end point to appear.

Thickness testing shall not apply to other processes having equal corrosion resistance; acceptance shall be determined by comparison in salt fog atmosphere per ASTM Method B-117.

MARKING

Sec. 12-10-206.
The name of the manufacturer, or trademark by which the manufacturer can be readily identified, shall be legibly marked on the latch or lock where it can be seen after installation. When the manufacturer produces similar devices, the type, model number or letter designation identifying the listed product shall be legibly marked on the latch or case. Such identification may be an approved marking or label on the case.

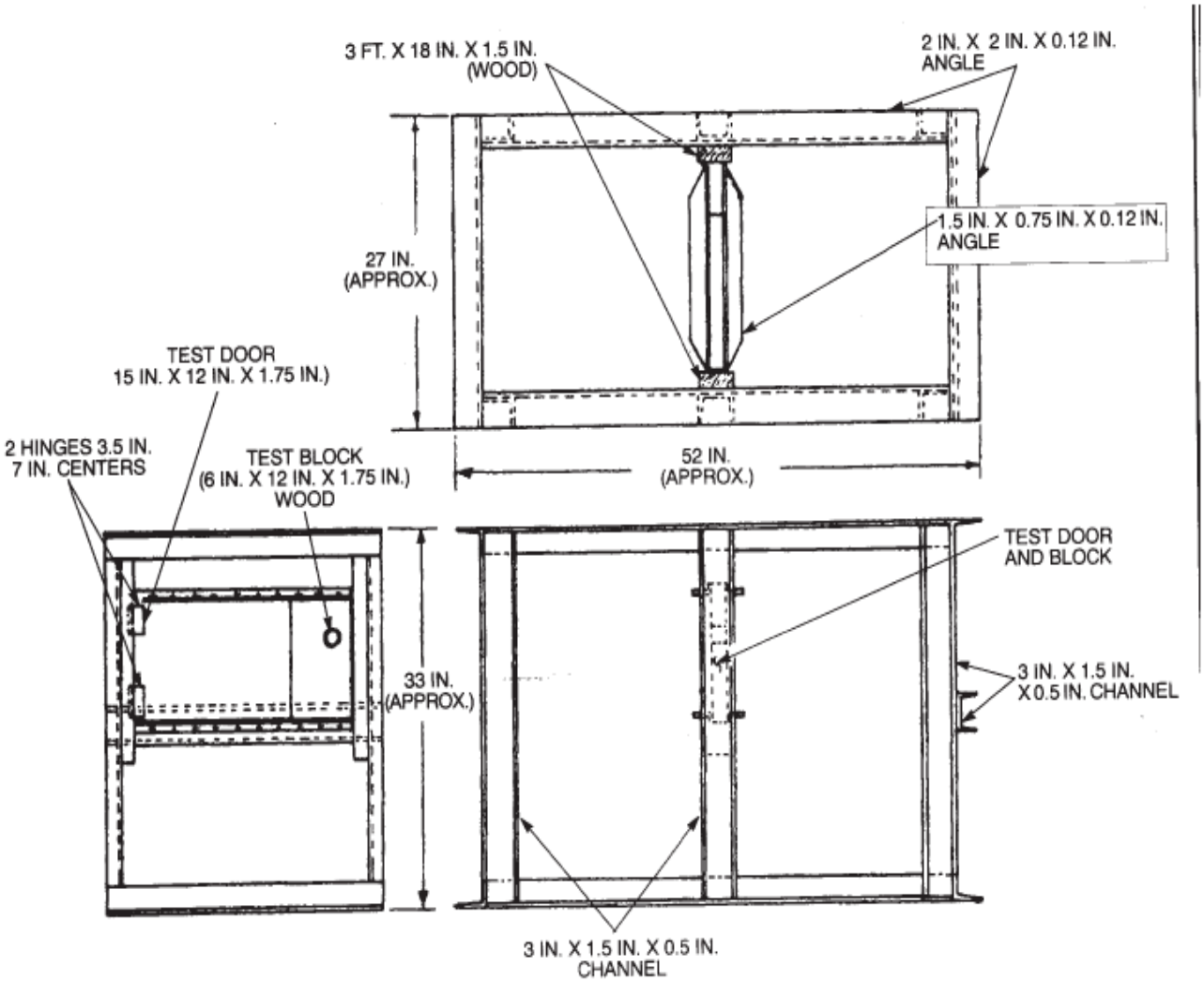

FIGURE 12-10-2-1—STATIC LOADING FIXTURE

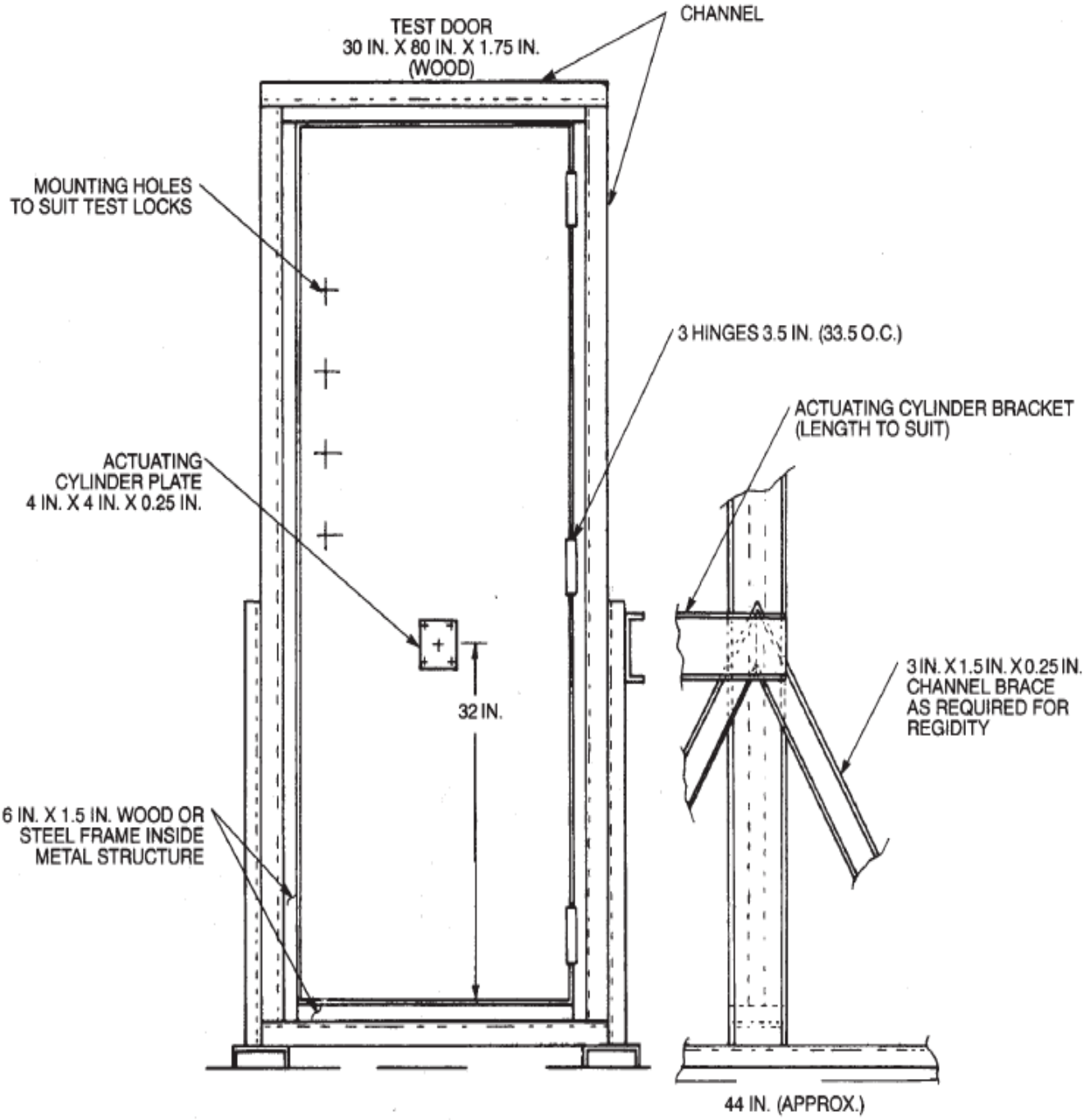

FIGURE 12-10-2-2—ENDURANCE LIFE TESTING APPARATUS

CHAPTER 12-10-3
EXITS

EMERGENCY EXIT AND PANIC HARDWARE
STANDARD 12-10-3

STATE FIRE MARSHAL

SCOPE

Sec. 12-10-300.

(a) **Exit door hardware.** These requirements and methods of test apply to releasing devices actuated by a crossbar for outward-opening doors intended for use on exit doors.

(b) **Fire-exit hardware.** Releasing devices intended for use on doors bearing a fire-retardant classification shall also conform to the construction standards and performance tests specified in Fire Door Assembly Tests, SFM 12-7-4, Section 12-7-400.

(c) **Listing by approved listing agency.** Listing by an approved listing agency shall not be construed as necessarily indicating compliance in all respects with the requirements of these Construction Standards and Performance Tests for Emergency Exit and Panic Hardware. The test report of the listing agency may be filed for review and after evaluation, if it is found to provide evidence of conformance, the releasing device assembly may be recognized for approval and listing.

INSTRUCTIONS

Sec. 12-10-301.
Approved installation instructions shall be provided by the manufacturer. Instructions shall be illustrated and shall include directions and information adequate for obtaining proper and safe installation of the equipment.

DESIGN

Sec. 12-10-302.

(a) **Releasing pressure.** Exit panic hardware mechanisms shall be designed to release the door latch or latches when pressure not to exceed 15 pounds is applied at any point along the cross-bar perpendicular to the door in the direction of exit travel. The cross-bar shall extend across not less than one-half the width of the door.

(b) **Locking device.** A locking device employed as part of the mechanism shall not prevent release of the door latch or latches when pressure of not to exceed 15 pounds is applied to the cross-bar in the direction of exit travel.

(c) **Dead locking bolt.** A dead locking bolt shall not be provided as a part of the mechanism unless it is released and retracted, and does not prevent release of the door latch or latches, or

release of the door to swing outward when pressure not to exceed 15 pounds is applied to the cross-bar in the direction of exit travel.

(d) **Cross bar.** The ends of the cross-bar shall be curved, guarded or otherwise designed to prevent catching on the clothing of persons during egress.

(e) **Springs.** The release mechanism shall not depend on springs to release or retract the door latch or latches, locking mechanism, dead bolt or vertical rods.

(f) **Dogging devices.** Exit panic hardware mechanisms shall not be equipped with any locking or dogging device, set screw or other arrangement which can be used to prevent release of the door latch or latches, locking device or dead locking bolt when pressure is applied to the cross-bar.

CONSTRUCTION MATERIALS

Sec. 12-10-303.

(a) **Strength.** The materials used in the assembly of a releasing mechanism shall have mechanical strength equivalent to brass or bronze to perform their intended function.

(b) **Springs.** Component springs used in the assembly of a releasing mechanism shall be of material having spring properties equivalent to stainless steel conforming to ASTM A 313-67.

(c) **Corrosion resistance of moving parts.** Moving parts in the releasing mechanism assembly shall have corrosion resistance equivalent to 300 series stainless steel, or shall show no visual signs of corrosion after being subjected to a salt fog atmosphere per ASTM B 117 for a period of 120 hours.

(d) **Nonmoving parts.** Nonmoving parts, cases and similar parts shall be of materials, or shall be coated to provide corrosion protection equivalent to 0.0005-inch-thick cadmium coated steel as determined by comparison in salt fog atmosphere per ASTM B 117 for a period of not less than 16 hours.

(e) **Galvanic action.** Coated or uncoated metals used in the assembly of releasing mechanisms shall not be used in combination such as to cause detrimental galvanic action which may adversely affect the function of any part of the assembly.

(f) **Nonmetallic materials.** Nonmetallic materials may be used as coatings for wearing surfaces, rollers, finishes or for similar purposes if the materials otherwise conform to these requirements.

ENDURANCE AND PERFORMANCE TESTS

Sec. 12-10-304.

(a) **Testing laboratory.** Tests shall be conducted at a testing laboratory approved by the State Fire Marshal, or tests shall be conducted by a qualified independent fire protection engineer, acceptable to the State Fire Marshal in test facilities acceptable to the State Fire Marshal.

(b) **Report.** The test report shall include a detailed description of the releasing mechanism and its intended function; engineering data, shop drawings and photographs; identification of materials as to source, composition, strength and corrosion resistance; the physical or chemical tests including dimension of parts before and after the endurance tests establishing conformance of materials. The report shall include copies of the manufacturer's installation instructions. The report shall be verified by the laboratory or fire protection engineer responsible for the conduct of the test. The test report and evidence of listing by an approved listing agency may be provided for the applicable portions of these endurance and performance tests.

(c) **Test equipment.** The releasing mechanism shall be applied on a suitable door hung on heavy duty ball bearing butts or pivots installed in a suitable metal frame in accordance with the manufacturer's instructions. A motor-driven mechanism shall be used to actuate the cross-bar so as to release the latches or dead-locking bolts, push the door open and jerk the door shut so that the latches or dead-locking bolts operate as in service. The rate of operation or number of cycles shall be approximately ten per minute. For the test the assembly is to have only the lubrication which is provided at the factory or as recommended by the manufacturer in his installation instructions.

Note: Mechanisms involving dead-locking bolts may require modification in the test procedure in order to simulate the intended in-service condition. Modifications in the test procedure shall be filed for evaluation and approval before proceeding with the test.

(d) **Releasing pressure.** The motor-driven mechanism shall be arranged to apply not to exceed 15 pounds pressure against the cross-bar to release the door latch(es) or dead-locking bolts before the door is pushed open.

(e) **Cycle test.** The release mechanism and latches or dead-locking bolts shall function as intended for 100,000 cycles of operation without failure or excessive wear of the parts.

EMERGENCY OPERATION TEST

Sec. 12-10-305.

(a) **Releasing pressure.** The release mechanism shall be so designed that a horizontal force of 50 pounds or less will actuate the release bar and latches or dead-locking bolt when the latched or locked door is subjected to outward pressure as described in Sections 12-10-305 (c) and (d). The horizontal force shall be applied at any point along the cross-bar perpendicular to the door in the direction of swing.

(b) **Test specimen.** The test specimen for the emergency operation test shall be the sample which has been previously subjected to the cycle test specified in Section 12-10-304.

(c) **Testing instrument.** The horizontal force applied to the cross-bar shall be measured with a calibrated spring scale or other approved means.

(d) **Outward pressure, single door.** A hydraulic loading device or load dynamometer shall be used to apply a horizontal force of 250 pounds against the latching edge in the direction in which the door opens. The thrust load shall be applied to the stile immediately above the latching mechanism.

(e) **Outward pressure, double doors.** A hydraulic loading device or load dynamometer shall be used to apply a horizontal force of 250 pounds against the lock stile of each door of doors in pairs 2 inches in from the edge at midpoint between top and bottom of each door leaf in the direction of door swing.

(f) **Release bar deformation.** The cross-bar on a 36-inch wide door shall not be permanently set or deformed in excess of $^{1}/_{4}$ inch, by the test; a spacing of at least 1 inch is to be provided and maintained between the cross-bar and the face of the door when the horizontal force is applied against the cross-bar.

MARKING

Sec. 12-10-306.
The listee's name (or approved symbol), type or model designation shall be plainly marked on the releasing assembly. Devices and assemblies which are not listed by an approved listing agency for the intended purpose shall bear a label or other identifying markings as approved by the State Fire Marshal.

CHAPTERS 12-11A AND 12-11B
BUILDING AND FACILITY ACCESS SPECIFICATIONS

Detectable warning products and directional surfaces installed after January 1, 2001, shall be evaluated by an independent entity, selected by the Department of General Services, Division of the State Architect-Access Compliance, for all occupancies, including transportation and other outdoor environments, except that when products and surfaces are for use in residential housing evaluation shall be in consultation with the Department of Housing and Community Development. See Government Code Section 4460.

PRODUCT APPROVAL FOR DETECTABLE WARNING PRODUCTS AND DIRECTIONAL SURFACES

SCOPE

Sections 12-11A.202 and 12-11B.202.
These requirements and test methods apply to detectable warning products and directional surfaces.

DETECTABLE WARNING PRODUCTS

Sections 12-11A.203 and 12-11B.203.
Must comply with the California Code of Regulations, Title 24.

DIRECTIONAL SURFACES

Sections 12-11A.204 and 12-11B.204.
Must comply with the California Code of Regulations, Title 24.

INDEPENDENT ENTITY

Sections 12-11A.205 and 12-11B.205.
Evaluation by an independent entity to confirm the prescriptive and performance standard of detectable warning products or direction surfaces installed after January 1, 2001. An independent entity is a not-for-profit product safety testing and certification organization, dedicated to testing for public safety. An independent entity would operate for the testing, certification and quality assessment of products, systems and services.

TWO-YEAR APPROVAL

Sections 12-11A.206 and 12-11B.206.
Detectable warning products and directional surfaces are to be recertified every two years without exception or waiver.

FEE

Sections 12-11A.207 and 12-11B.207.
The Division of the State Architect-Access Compliance may impose a fee on manufacturers of the specified products, to cover the cost of detectable warning products and directional surfaces.

DISABILITY ACCESS ACCOUNT

Sections 12-11A.208 and 12-11B.208.
The fees received from manufacturers will be placed in the Disability Access Account.

DETECTABLE WARNING PRODUCTS
AND DIRECTIONAL SURFACES

Sections 12-11A.209 and 12-11B.209.
Detectable Warning Products and Directional Surfaces must ensure consistency and uniformity:

(a) Shape,

(b) Color fastness,

(c) Conformation,

(d) Sound-on-cane acoustic quality,

(e) Resilience, and

(f) Attachment will not degrade significantly for at least five years.

SIGNIFICANT DEGRADATION

Sections 12-11A.210 and 12-11B.210.
Significant degradation means that the product maintains at least 90 percent of its approved design characteristics.

SELECTION OF INDEPENDENT ENTITY

Sections 12-11A.211 and 12-11B.211.
The independent entity selected by the Division of the State Architect-Access Compliance shall be recognized as having appropriate expertise in determining whether products comply with the California Code of Regulations, Title 24.

Authority: Government Code Sections 4450, 4460 and Health & Safety Code Section 18949.1.

Reference: Government Code Section 4460.

CHAPTER 12-12
ENGINEERING REGULATION—QUALITY AND DESIGN OF THE MATERIALS OF CONSTRUCTION

STANDARD 12-12-1
CALIFORNIA STANDARD FOR EARTHQUAKE-ACTUATED GAS SHUTOFF VALVES
(See Chapter 12, *California Plumbing Code*.)

DIVISION OF THE STATE ARCHITECT

Authority: Sections 19180-19183, Health and Safety Code.

Reference: Section 19182, Health and Safety Code.

Division I—CONSTRUCTION

SCOPE

Sec. 12-12-101.
The American Society of Civil Engineers requirements for “Earthquake-Actuated Automatic Gas Shutoff Devices,” ANSI/ASCE/SEI 25-06 (Copyright 2008 by ASCE), shall be the applicable standard used by the Division of the State Architect for the certification of these devices.

Sec. 12-12-101.1.
Each installation of a customer-owned device that satisfies this standard must be done in accordance with the *California Plumbing Code.*

CHAPTER 12-13
STANDARDS FOR INSULATING MATERIAL

(See Part 6, Title 24, C.C.R.)

DEPARTMENT OF CONSUMER AFFAIRS
Bureau of Home Furnishings and
Thermal Insulation

Article 3. Standards for Insulating Material

APPLICATION AND SCOPE

Sec. 12-13-1551.

(a) This article establishes standards governing the quality of insulation sold within the state after September 22, 1981, including those properties which affect the safety and thermal performance of insulation during application and in the use intended.

(b) The provisions of this article shall apply only to the following types of insulating material:

1. Aluminum foil (reflective foil);
2. Cellular glass (board form);
3. Cellulose fiber (loose fill and spray applied);
4. Mineral aggregate (board form);
5. Mineral fiber (blankets, board form, loose fill);
6. Perlite (loose fill);
7. Polystyrene (board form, molded and extruded);
8. Polyurethane (board form and field applied);
9. Polyisocyanurate (board form and field applied);
10. Urea formaldehyde foam (field applied);
11. Vermiculite (loose fill).

(c) The provisions of this article shall apply to the sale of insulating material within the state. The provisions of this article shall not apply to insulating material manufactured in California, but sold outside the state, nor to insulating material manufactured outside California and sold wholesale in California for final retail sale outside the state. For the purpose of this article, the

sale of a building or an appliance which contains installed insulating material is not considered the sale of the insulating material.

(d) Any type of insulating material not listed in subsection (b) may be sold within California notwithstanding any other provision of this article.

Authority: Sections 25920 and 25922, Public Resources Code.

Reference: Sections 25910, 25920, 25921 and 25922, Public Resources Code.

HISTORY:

1. Repealer of Article 3 (Sections 1551-1561) filed 8-11-78; effective thirtieth day thereafter (Register 78, No. 32). For prior history, see Registers 76, No. 16; 78, Nos. 2 and 26.

2. New Article 3 (Sections 1551-1565) filed 1-16-79; effective thirtieth day thereafter (Register 79, No. 3).

3. Amendment filed 8-10-81; designated effective 9-22-81 (Register 81, No. 33).

DEFINITIONS

Sec. 12-13-1552.
For purposes of this article, the following definitions shall apply:

(a) **"Approved laboratory"** means any testing facility including a facility owned or operated by a manufacturer which has been approved pursuant to Section 1554 of this article.

(b) **"ANSI"** means the American National Standards Institute.

(c) **"ASTM"** means ASTM International.

(d) **"Building materials"** means materials used in walls, ceilings, roofs and floors of buildings.

(e) **"Exposed application"** means any interior application of the product in which it is not used in a construction assembly imposing a material which meets the requirements of Chapter 8 of the *California Building Code* in substantial contact with the facing or membrane surface.

(f) **"Installed design density"** means the proven density for loose fill insulation other than cellulose which has been determined by the manufacturer to constitute the density whereby settlement of no more than 2 percent shall occur over the first three years, or no more than 4 percent over the first 15 years of installation.

(g) **"Insulating material" or "insulation"** means any material listed in Section 1551 (b) of this article and placed within or contiguous to a wall, ceiling, roof or floor of a room or building, or contiguous to the surface of any appliance or its intake or outtake mechanism, for the purpose of reducing heat transfer or reducing adverse temperature fluctuations of the building room or appliance.

(h) **"Manufacturer"** means any person who either:

1. Produces insulating material in the final composition either for use in the form sold or to be further dimensionally modified; or

2. In the case of polyurethane, polyisocyanurate and urea formaldehyde foam formed at the installation site, produces the primary components of the material.

"Manufacturer" shall not include any building contractor or any other person whose sole activity is to install insulation at the installation site.

(i) **"Quality assurance program." (Reserved)**

(j) **"Recommended wall density"** means the density used for pressure fill retrofit wall applications to prevent settling.

(k) **"Representative sample"** means a sample of insulating material with the same characteristics (other than thickness) and using the same facing imposed on the insulating material manufactured for final use.

(l) **"Representative thickness"** means a thickness of insulating material at which the change in thermal performance per inch will vary no more than plus or minus 2 percent with increases in thickness.

(m) **"TAPPI"** means Technical Association of Pulp and Paper Industry.

(n) **"Thermal performance"** means the tested thermal conductivity, thermal conductance or thermal resistance (*R*-value), as appropriate, of an insulating material.

(o) **"Urea formaldehyde foam"** means a cellular plastic insulation material generated in a continuous stream by mixing the components which are a urea formaldehyde resin, air and a foaming agent.

Authority: Sections 25920 and 25922, Public Resources Code.

Reference: Sections 25915 (a), 25920, 25921 and 25922, Public Resources Code.

HISTORY:

1. Amendment filed 8-10-81; designated effective 9-22-81 (Register 81, No. 33).

QUALITY STANDARDS

Sec. 12-13-1553.

The manufacturer shall cause the testing of samples of insulating material for conformity with the quality standards described in this section.

(a) **General testing provisions.** In testing any material pursuant to this section, the following general procedures shall be used.

1. All tests with the exception of the ANSI/ASTM E 84-79 test shall be conducted using representative samples at the representative thickness of the insulation, except that when the final use of an insulating material entails a thickness less than the representative thickness, then the insulating material will be tested at the lesser thickness.

2. Where uniformity of product ensures consistency of test results across a product grouping, test results for one may be used for certification of other products within that product group. The manufacturer shall provide sufficient documentation to establish a valid basis for applying a particular test result to other products within the group.

   The Executive Director shall determine whether a valid basis exists for grouping products for testing pursuant to this subsection. If it is determined that a valid basis does not exist, individual tests shall be required. A manufacturer may appeal the Executive Director's determination to the full Commission.

3. Thermal performance of building insulations shall be stated in *R* value. Other insulations shall use thermal conductivity, conductance, or *R* value as appropriate.

4. All thermal performance tests shall be conducted on materials which have been conditioned at 73.4° ± 3.6°F and a relative humidity of 50 ± 5 percent for 24 hours immediately preceding the tests. The average testing temperature shall be 75° ± 2°F with at least a 40°F temperature difference.

5. Aluminum foil insulation shall be tested according to ANSI/ASTM C 236-66 to determine the thermal performance in horizontal, upward and downward directions. The tested thermal performance in the heat-flow direction or directions of the intended application shall be labeled on the material. The manufacturer shall test once in each direction of intended application, except that for products labeled with only one heat-flow direction, the manufacturer shall test two samples in that direction.

6. Insulation (other than aluminum foil insulation materials) for which additional value is claimed for facings and air spaces shall be tested for thermal performance as a material without the air space pursuant to this article. The manufacturer may elect to report additional thermal performance values of a given construction tested according to ANSI/ASTM C 236-66 for that construction as long as full details of that construction are also disclosed in the certification statement and pursuant to Section 1557 (c) of this article. If a manufacturer elects to report a thermal performance value for a material plus an air space (as supplemental information to the required material thermal performance), but not necessarily for a full construction, the manufacturer must also disclose the conditions of the test and the limitations to the attainment of that result.

7. Except as provided in Items 5 and 6, the thermal performance test results certified under Section 1555 of this article shall be the average of the values obtained from at least three tests.

8. The average measured thermal performance of the tests required by Items 5, 6 and 7 shall not be more than 5 percent below the value specified on the product. In addition, all insulation material sold within the state after September 22, 1981, shall have a measured thermal performance not more than 10 percent below the value specified on the product.

9. All numbered test descriptions shall be contained in the document “Test Descriptions for Insulating Material” dated February 27, 1981.

10. Facings on representative samples may be removed or modified by slitting for the ANSI/ASTM C 177-76 and ANSI/ASTM C 518-76 tests.

11. All thermal performance testing equipment used for testing insulating materials shall be calibrated with samples referenced to the United States National Bureau of Standards.

12. Manufacturers of loose fill insulations for which no settled density test is required by this section shall be required to include the installed design density in the identifying information described in Section 1557. The manufacturer shall provide sufficient documentation to establish a valid basis for the determination of installed design density.

    The Executive Director shall determine whether a valid basis exists for the installed design density claimed by the manufacturer. If it is determined that a valid basis does not exist, the director may assign an appropriate installed design density or may require an appropriate test to determine the installed design density. The manufacturer may appeal the Executive Director’s determination to the full Commission.

13. Within 180 days after the availability of appropriate representative thickness calibration samples from the National Bureau of Standards, all insulating materials thicker than 1 inch, which have not previously been tested at the representative thickness of a representative sample, shall be tested at representative thickness and recertified. Test results and a revised certification statement will be submitted to the Executive Director. The Executive Director shall determine if and when an appropriate representative thickness calibration sample is available from the National Bureau of Standards and shall publish a list of available representative thickness calibration samples. The manufacturer may appeal the Executive Director’s determination to the full Commission.

14. All products which may be used for pressure fill retrofit wall application shall be separately tested for thermal performance using a sample prepared at the manufacturer’s recommended wall density for such applications.

15. All water heater insulation kits and nonpreformed pipe insulation shall be tested for thermal performance at the installed compressed thickness of a typical application. Installed compressed thickness shall be determined according to Test Description Number 6. All nonpreformed duct insulation shall be labeled, in accordance with Section 1557(c), with an installed *R*-value equal to the *R*-value of the uncompressed insulation times 0.75.

(b) **Aluminum foil.**

1. **Composition.** The insulation shall have uniform flat surfaces and shall not be crumpled, torn or punctured. Aluminum foil shall contain not less than 99 percent aluminum. Kraft paper and flangeboard shall meet the requirements of ANSI/TAPPI T400 0S75. Flangeboard used for more than two insulation layers shall be of 28 point grade minimum, if single sheet flangeboard is used or 14 point grade minimum if double sheet flangeboard is used.

   Adhesive used in bonding shall be waterproof and shall show no sign of bleeding when tested in accordance with the following test procedure. Bleeding at cut edges may be disregarded.

   Specimens for tests shall consist of pieces of insulation cut to approximately 3 by 6 inches, suspended in a vertical position and heated to a temperature of 180°F ± 5°F for at least five hours. At the end of heating period, examine the reflective surfaces to determine whether the adhesive has bled or extruded through the surface, or delamination has occurred.

2. **Thermal performance.** Thermal performance shall be determined according to ANSI/ASTM C 236-66. The test panel shall consist of a panel utilizing a wooden frame of 2 by 6 inches construction covered with $^{3}/_{4}$-inch plywood on both sides. The resultant thermal performance shall be based on the insulation only.

3. **Size.** Layers of insulation composed of unsupported foil that is exposed shall have a minimum thickness of 0.0004 inch. Unsupported foil that is sandwiched in a multilayer sheet shall have a minimum thickness of 0.00035 inch. Foil bonded to kraft paper shall have a minimum thickness of 0.00025 inch. Minimum space between layers of a multilayer sheet shall conform with the United States General Services Administration insulation standard HH-I-1252B dated August 18, 1976.

4. **Resistance to combustion.** Surface-burning characteristics shall be determined according to the ANSI/ ASTM E 84-79, and shall not exceed the following values:

Flame spread	25
Smoke developed	50

5. **Pliability.** Foil shall be folded and the folded edge smoothed using a light finger pressure. The finished insulation shall not crack when folded to 180° bend at a temperature of 70°± 2°F and a relative humidity of 50 ± 5 percent.

(c) **Cellular glass in board form.**

1. **Composition.** The material shall consist of a glass composition which has been foamed or cellulated under molten conditions, annealed and set to form a rigid material with hermetically sealed cells.

2. **Thermal performance.** Determination of the thermal performance shall be based on a representative sample and shall be in accordance with ANSI/ASTM C 177-76, ANSI/ASTM C 236-66, or ANSI/ASTM C 518-76 at the manufacturer's option.

3. **Resistance to combustion.** Surface-burning characteristics shall be determined according to ANSI/ASTM E 84-79, and shall not exceed the following values:

Flame spread	25
Smoke developed	50

(d) **Cellulose fiber in loose fill form.**

1. **Composition.** The basic material shall consist of virgin or recycled wood-based cellulosic fiber and may be made from related paper or paperboard stock, excluding contaminated materials and extraneous foreign materials such as metals and glass which may reasonably be expected to be retained in the finished product. Suitable chemicals may be introduced to improve flame resistance, processing and handling characteristics. The particles shall not be so fine as to create a dust hazard, and the added chemicals shall not create a health hazard. The materials used must be capable of proper adhesion to the additive chemicals.

2. **Thermal performance.** Determination of the thermal performance shall be in accordance with ANSI/ASTM C 177-76, ANSI/ASTM C 236-66, or ANSI/ASTM C 518-76 at the manufacturer's option.

3. **Density.** The density shall be determined according to the United States General Services Administration insulation standard HH-I-515D dated June 15, 1978, or as amended October 11, 1979, at the manufacturer's option. Cellulose insulation made from newsprint may use a 13 percent settling percentage along with the drop box procedure in place of the humidity cycling procedure described in HH-I-515D dated June 15, 1978. All other tests for loose fill cellulose fiber insulation prescribed by this section shall be conducted at the settled density as determined herein.

4. **Resistance to combustion.** Flammability characteristics shall comply with the standard for flammability and smoldering combustion in 44 Fed. Reg.pages 39966-39973.

5. **Resistance to fungi.** Resistance to fungi shall be determined according to Method 508 of the March 10, 1975, edition of the Military Standard for Environmental Test Methods known as MIL-STD-810C, except the spore suspensions shall be prepared using distilled water. The core of gypsum wall board shall be used as the control. After the test exposure, the test samples shall show no more fungal growth than the control material when examined at 40 times magnification.

6. **Corrosiveness.** The product shall comply with the standard for corrosiveness set forth in 44 Fed. Reg. pages 39966-39973.

7. **Odor emission.** Odor emission shall be determined according to Test Description Number 3. A detectable odor of objectionable nature observed by two or more of the panel members shall be cause for rejection.

8. **Identification.** Each insulation container shall be marked with the type (pouring or pneumatic), net weight and the manufacturer's recommendations for installation including minimum thickness, maximum coverage and settled density to provide the levels of thermal performance shown. Manufacturer's installation recommendations shall include precautions according to the *California Electrical Code* Section 410-66.

Insulation which may be used for pressure fill retrofit wall application shall be marked with the recommended wall density to prevent settling and separately marked with the tested thermal performance for such applications.

(e) **Cellulose fiber spray applied.**

1. **Composition.** The basic material shall consist of virgin or recycled wood-based cellulosic fiber and may be made from related paper or paperboard stock, excluding contaminated materials and extraneous foreign materials such as metals and glass which may reasonably be expected to be retained in the finished product. Suitable chemicals may be introduced to improve flame resistance, processing, adhesive and cohesive qualities, and handling characteristics. The added chemicals shall not create a health hazard.

   The basic material shall be processed into a form suitable for installation by pneumatic conveying equipment and simultaneous mixing with water and/or adhesive at the spray nozzle.

2. **Thermal performance.** Determination of the thermal performance shall be in accordance with ANSI/ASTM C 177-76, ANSI/ASTM C 236-66 or ANSI/ASTM C 518-76 at the manufacturer's option.

3. **Resistance to combustion.** Flammability characteristics shall comply with the standard for flammability and smoldering combustion in 44 Fed. Reg. pages 39966-39973.

4. **Corrosiveness.** The product shall comply with the standard for corrosiveness set forth in 44 Fed. Reg. pages 39966-39973.

5. **Bond strength.** The bond strength shall be determined by Test Description Number 3 and the bond shall support a force five times the weight of the sample for one minute.

6. **Bond deflection.** The bond deflection shall be determined by Test Description Number 4 and shall be greater than $^{1}/_{60}$th of the length of the sample.

7. **Air erosion.** The air erosion shall be determined by Test Description Number 5 and shall withstand an air velocity of 800 ft/min.

8. **Odor emission.** Odor emissions shall be determined by Test Description Number 1. A detectable odor of objectionable nature observed by two or more panel members shall be cause for rejection.

9. **Fungi resistance.** Resistance to fungi shall be determined according to Method 508 of the March 10, 1975, edition of the Military Standard for Environmental Test Methods known as MIL-STD-810C, except the spore suspensions shall be prepared using distilled water, and observations shall be made at seven-day intervals during the 28-day cycle to determine the minimum length of time required for fungal growth to appear. Viability of the spore organisms shall be determined by injecting or inoculating a separate bottle of culture medium with the spore preparation for each organism and observing for growth and individual viability. The back side of $^{1}/_{2}$-inch standard commercial grade gypsum wall board grayback paper surface shall be used as the control. After the test exposure, the test samples shall be examined at 40 times magnification for evidence of fungal growth. The material shall show no more fungal growth than the control material.

10. Test procedures described in Items 5, 6 and 7 are not required of products which are installed in such a manner that physical restrictions imposed by the construction elements preclude any possibility of subsequent delamination, erosion, or dusting and the product is identified only for such installations.

(f) **Mineral aggregate in board form.**

1. **Composition.** The basic material shall be mineral in nature, crushed, dried, and graded to the proper particle size and expanded by the application of heat to form a spherical, cellular type of aggregate. It shall be composed of spherical cellular beads of expanded aggregate and fibers formed into rigid, flat, rectangular units and shall have an integral water proofing treatment. It shall be clean, dry and free of extraneous material. Fibers shall be evenly distributed and insulation and facings shall be sufficiently coherent to be unaffected by handling and installation.

2. **Thermal performance.** Determination of the thermal performance shall be in accordance with ANSI/ASTM C 177-76, ANSI/ASTM C 236-66 or ANSI/ASTM C 518-76 at the manufacturer's option.

3. **Resistance to combustion.** Surface-burning characteristics of materials with facings and membranes intended for exposed applications shall be determined according to ANSI/ASTM E 84-79 and shall not exceed the following values:

Flame spread	25
Smoke developed	450

Facings and membranes of materials intended for exposed applications shall be exposed to the flame during the ANSI/ASTM E 84-79 test.

Insulation boards exclusive of facings and membranes shall not exceed the following values:

Flame spread	25
Smoke developed	50

(g) **Mineral fiber in blanket form.**

1. **Composition.** The basic material shall be fibers made from mineral substances such as rock, slag or glass processes from a molten state into fibrous form.

2. **Thermal performance.** Determination of the thermal performance shall be in accordance with ANSI/ASTM C 177-76, ANSI/ASTM C 236-66 or ANSI/ASTM C 518-76 at the manufacturer's option.

3. **Size.** The thickness shall be determined according to ANSI/ASTM C 167-64.

4. **Resistance to combustion.** Surface-burning characteristics of materials with facings and membranes intended for exposed applications shall be determined according to ANSI/ASTM E 84-79 and shall not exceed the following values:

Flame spread	25
Smoke developed	450

Facings and membranes of materials intended for exposed applications shall be exposed to the flame during the ANSI/ASTM E 84-79 test.

Insulation blankets not intended for exposed applications shall comply with the United States General Services Administration insulation standard HH-I-521F dated September 4, 1980, for flammability and smoldering combustion testing.

5. **Corrosiveness.** Corrosiveness shall be determined according to Test Description Number 2. The steel test plate in contact with the insulation shall show no greater corrosion than a steel plate in contact with sterile cotton.

6. **Resistance to fungi.** Resistance to fungi shall be determined according to Method 508 of the March 10, 1975, edition of the Military Standard for Environmental Test Methods known as MIL-STD-810C except the spore suspensions shall be prepared using distilled water. The core of gypsum wall board shall be used as the control. After the test exposure, the test samples shall show no more fungal growth than the control material when examined at 40 times magnification.

7. **Odor emission.** Odor emission shall be determined according to Test Description Number 1. A detectable odor of objectionable nature observed by two or more of the panel members shall be cause for rejection.

(h) **Mineral fiber in board form.**

1. **Composition.** The basic material shall be made from mineral substances such as rock, slag or glass processed from a molten state into a fibrous form. Insulation shall be composed of mineral fibers with water resistant binder added and formed into flat, rectangular units. Insulation boards shall be uniform in quality, free from defects, such as broken edges, splits or loose materials which would impair its intended use.

Roof insulation boards shall have either integral waterproofing treatment or a waterproof coating on one surface. The coating shall be flush with the edges of the sides and may be flush with or extend over both ends.

2. **Thermal performance.** Determination of the thermal performance shall be in accordance with ANSI/ASTM C 177-76, ANSI/ASTM C 236-66 or ANSI/ASTM C 518-76 at the manufacturer's option.

3. **Resistance to combustion.** Surface-burning characteristics of materials with facings and membranes intended for exposed applications shall be determined according to ANSI/ASTM E 84-79 and shall not exceed the following values:

Flame spread	25
Smoke developed	450

Facings and membranes of materials intended for exposed applications shall be exposed to the flame during the ANSI/ASTM E 84-79 test.

Insulation boards exclusive of facings and membranes shall not exceed the following values:

Flame spread	25
Smoke developed	50

(i) **Mineral fiber in loose fill form.**

1. **Composition.** Mineral fiber insulation shall be made from mineral substances such as rock, slag or glass processed from a molten state into fibrous form. The insulation shall be mechanically processed to produce a mineral fiber suitable for pneumatic or poured application.

2. **Thermal performance.** Determination of the thermal performance shall be in accordance with ANSI/ASTM C 177-76, ANSI/ASTM C 236-66 or ANSI/ASTM C 518-76 at the manufacturer's option.

3. **Density.** The density shall be determined according to installed design density. All tests shall be conducted at the installed design density.

4. **Resistance to combustion.** Loose fill insulation shall comply with the United States General Services Administration insulation standard HH-I-1030B dated August 12, 1980, for flammability and smoldering combustion testing.

5. **Corrosiveness.** Corrosiveness shall be determined according to Test Description Number 2. The steel plate in contact with the insulation shall show no greater corrosion than a steel plate in contact with sterile cotton.

6. **Resistance to fungi.** Resistance to fungi shall be determined according to Method 508 of the March 10, 1975, edition of the Military Standard for Environmental Test Methods known as MIL-STD-810C, except the spore suspensions shall be prepared using distilled water. The core of gypsum wall board shall be used as the control. After

the test exposure, the test samples shall show no more fungal growth than the control material when examined at 40 times magnification.

7. **Odor emission.** Odor emission shall be determined according to Test Description Number 1. A detectable odor of objectionable nature observed by two or more of the panel members shall be cause for rejection.

8. **Identification.** Each insulation container shall be marked with the type (pouring or pneumatic), .the net weight and the manufacturer's recommendations for installation including minimum thickness, maximum coverage and installed design density to provide the levels of thermal performance shown. Manufacturer's installation recommendations shall include precautions according to the *California Electrical Code* Section 410-66.

Products which may be used for pressure fill retrofit wall application shall be marked with the recommended wall density to prevent settling and separately marked with the tested thermal performance for such applications.

(j) **Perlite in loose fill form.**

1. **Composition.** Expanded perlite loose fill insulation shall be produced by the expanding of natural perlite or by heating.

2. **Thermal performance.** Determination of the thermal performance shall be in accordance with ANSI/ASTM C 177-76, ANSI/ASTM C 236-66 or ANSI/ASTM C 518-76 at the manufacturer's option.

3. **Density.** Density shall be determined according to installed design density. All tests except the ANSI/ASTM E 84-79 test shall be conducted at the installed design density.

4. **Resistance to combustion**. Resistance to combustion shall be determined by the use of the Attic Floor Radiant Panel Test, as described in the United States General Services Administration insulation standard HH-I-515D Section 3.1.9 as amended October 11, 1979.

5. **Identification.** Each insulation container shall be marked with the type (pouring or pneumatic), the net weight and the manufacturer's recommendations for installation including minimum thickness, maximum coverage and installed design density to provide the levels of thermal performance shown. Manufacturer's installation recommendations shall include precautions according to the 1993 *National Electrical Code* Section 410-66.

   Products which may be used for pressure fill retrofit wall application shall be marked with the recommended wall density to prevent settling and separately marked with the tested thermal performance for such applications.

(k) **Polystyrene in board form.**

1. **Composition.** Insulation board shall be formed by the expansion of polystyrene resin beads or granules in a mold or the insulation board shall be formed by the expansion

of polystyrene base resin in an extrusion process. The insulation shall be uniformly fused, homogeneous, and essentially unicellular. Insulation board shall be uniform in physical properties and reasonably free of voids or accumulations of unexpanded material, foreign inclusions, broken corners and broken edges.

2. **Thermal performance.** Determination of the thermal performance shall be in accordance with ANSI/ASTM C 177-76, ANSI/ASTM C 236-66 or ANSI/ASTM C 518-76 at the manufacturer's option. All foam insulation materials using materials other than air or pentane as an expanding agent shall either separately condition samples at 73.4°± 3.6°F and a relative humidity of 50 ± 5 percent, and at 140°F dry heat and test at 30-, 60- and 90-day intervals or shall test samples certified by an approved testing laboratory to have been aged while exposed to free air in a well ventilated room for at least two years at 70°± 10°F, provided, however, that until $2^1/_2$ years after the adoption of these quality standards by the Commission, test samples may be aged for six months for certification of the material.

   Notwithstanding any other provision of this article, this thermal performance standard shall not take effect until 250 days after adoption. If the certification statement submitted pursuant to Section 1555 of this article does not include test results for thermal performance, the manufacturer shall submit a new certification statement which includes such test results prior to 250 days after adoption. If the latest certification statement is based on the six-month aging test, a new statement, based upon the two-year aging test or the accelerated aging test shall be submitted by $2^1/_2$ years after the adoption date.

3. A. **Resistance to combustion.** The material shall be tested to meet the requirements of Sections 2602.1-2602.6 of the 1994 *Uniform Building Code,* with the additional provision that the surface-burning characteristics shall be determined according to ANSI/ASTM E 84-79 and shall not exceed the following values:

Flame spread	75
Smoke developed	450

   B. This subsection shall not apply to any product recognized by the International Conference of Building Officials, as of the date of adoption of these regulations, as complying with Sections 2602.1-2602.6 of the 1994 *Uniform Building Code* based solely upon diversified testing. The manufacturer of any product which is recognized by the International Conference of Building Officials, subsequent to the date of approval of these regulations, as complying with Sections 2602.1-2602.6 of the 1994 *Uniform Building Code* based solely upon diversified testing, may petition the Commission for an exemption of that product from the provisions of this subsection.

4. **Dimensional stability.** All foamed polystyrene insulation materials which are factory formed shall be tested for dimensional stability in accordance with Procedures E and G of ASTM D 2126-75 with the following exceptions: (a) sample size shall be 12 inches by 12 inches ± 1 inch, and (b) samples shall be tested as manufactured with or without facers.

The average percent change in length or width shall not exceed ± 2 percent in 24 hours or ± 4 percent in seven days. The average percent change in thickness shall not exceed ± 10 percent in seven days. Samples shall be regarded as failing if: (1) delamination area of “faced” samples exceeds 25 percent or (2) warping or cupping exceeds $^{1}/_{4}$ inch when checked by a straight edge across raised diagonal corners.

(l) **Polyurethane and polyisocyanurate in board form and field applied.**

1. **Composition.** The manufacture of the insulation shall be based mainly on the reaction of an organic polyisocyanate with a polyol resin.

   Board shall be of uniform texture, reasonably free from accumulation of unexpanded material and foreign inclusions, and reasonably free of broken edges and corners. It shall be reasonably free from holes, voids, depressions and objectionable odor. Laminated composite boards shall be included in this quality standard. The faces of laminated boards shall adhere firmly throughout to the foam, and shall show no excessive amounts of slits, voids or depressions.

2. **Thermal performance.** Determination of the thermal performance shall be in accordance with ANSI/ASTM C 177-76, ANSI/ASTM C 236-66 or ANSI/ASTM C 518-76 at the manufacturer’s option. All foam insulation materials using materials other than air or pentane as an expanding agent shall either separately condition samples at 73.4°± 3.6°F and a relative humidity of 50 ± 5 percent, and at 140°F dry heat and test at 30-, 60- and 90-day intervals or shall test samples certified by an approved testing laboratory to have been aged while exposed to free air in a well ventilated room for at least two years at 70°± 10°F, provided, however, that until $2^{1}/_{2}$ years after the adoption of these quality standards by the Commission, test samples may be aged for six months for certification of the material.

   Notwithstanding any other provision of this article, this thermal performance standard shall not take effect until 250 days after adoption. If the certification statement submitted pursuant to Section 1555 of these regulations does not include test results for thermal performance, the manufacturer shall submit a new certification statement which includes such test results prior to 250 days after adoption. If the latest certification statement is based on the six-month aging test, a new statement, based upon the two-year aging test or the accelerated aging test shall be submitted by $2^{1}/_{2}$ years after the adoption date.

3. **Dimensional stability.** All foamed polyurethane and polyisocyanurate insulation materials which are factory formed shall be tested for dimensional stability in accordance with Procedures E and G of ASTM D 2126-75 with the following exceptions: (a) sample size shall be 12 inches by 12 inches ± 1 inch and (b) samples shall be tested as manufactured with or without facers.

   The average percent change in length or width shall not exceed ± 2 percent in 24 hours or ± 4 percent in seven days. The average percent change in thickness shall not

exceed ± 10 percent in seven days. Samples shall be regarded as failing if: (1) delamination area of “faced” samples exceeds 25 percent or (2) warping or cupping exceeds $^{1}/_{4}$ inch when checked by a straight edge across raised diagonal corners.

4. **Resistance to combustion.**

   A. The material shall be tested to meet the requirements of Sections 2602.1-2602.6 of the 1994 *Uniform Building Code*, with the additional provision that the surface-burning characteristics shall be determined according to ANSI/ASTM E 84-79 and shall not exceed the following values:

Flame spread	75
Smoke developed	450

   B. This subsection shall not apply to any product recognized by the International Conference of Building Officials, as of the date of adoption of this article, as complying with Sections 2602.1-2602.6 of the 1994 *Uniform Building Code* based solely upon diversified testing. The manufacturer of any product which is recognized by the International Conference of Building Officials, subsequent to the date of approval of these regulations, as complying with Sections 2602.1-2602.6 of the 1994 *Uniform Building Code* based solely upon diversified testing, may petition the Commission for an exemption of that product from the provisions of this subsection.

5. **Identification.** Foam containers shall state the conditions of proper storage.

(m) **Urea formaldehyde foam field applied.**

1. **Limitation on sale.** Urea formaldehyde foam is unsafe for use as insulation. Sale within the State of California of urea formaldehyde foam insulation is prohibited.

2. **Exemption.** Notwithstanding any other provision of this article, a manufacturer of the primary components of urea formaldehyde foam insulation may apply for certification as provided in Section 1555 of this article. Such certification statement shall indicate compliance with the following standards:

   A. **Composition.** The material shall consist of cellular plastic generated in a continuous stream by mixing the components which are a urea formaldehyde resin, air and a foaming agent. The material shall be suitable for filling closed cavities through small holes and suitable also for filling open cavities by trowelling during foaming prior to enclosure.

   B. **Thermal performance.** The effective thermal performance, incorporating a derating value, shall be determined according to the method described in 42 Fed. Reg. pages 55143-55148.

   C. **Resistance to combustion.** Surface-burning characteristics shall be determined according to the ANSI/ASTM E 84-79 and shall not exceed the following values:

Flame spread	25
Smoke developed	450

Test specimens shall be aged for 45 days at 70°F ± 5°F and 35 to 40 percent relative humidity before testing.

D. **Free formaldehyde content of dry foam.** The free formaldehyde content of the dry foam shall be less than 0.01 percent formaldehyde by weight when tested as specified in paragraph (f) (8), published in 45 Fed. Reg. page 63801, except that the specimens to be tested shall also be aged for 56 days at 24 ± 5°C (75 ± 10°F) and 50 ± 10 percent relative humidity in an uncovered beaker.

E. **Corrosiveness.** The material shall be tested and shall meet the criteria for corrosiveness as specified in 45 Fed. Reg. pages 63786-63810.

F. **Density.** The material shall be tested and shall meet the criteria for density as specified in 45 Fed. Reg. pages 63786-63810.

G. **Shrinkage.** The material shall be tested and meet the criteria for shrinkage as specified in 45 Fed. Reg. pages 63786-63810, except that the material shall not shrink more than 2.0 percent in any direction.

H. **Volume resistivity.** The material shall be tested and meet the criteria for volume resistivity as specified in 45 Fed. Reg. pages 63786-63810.

I. **Identification.** Resin and foaming agent containers shall be marked with conditions of proper storage and the derated *R*-value and shrinkage of the prepared foam as certified by the manufacturer.

J. **Safety information.** Installers of urea formaldehyde foam insulation shall present the following safety notice to the purchasers of the foam prior to the signing of the contract for installation. The notice shall be printed in a minimum of 8-point type size. One copy of the notice signed by the purchaser shall be immediately given to the purchaser, one copy shall be retained by the installer and one copy shall be mailed by the installer to the Executive Director of the Energy Commission within 48 hours after installation of the insulation is completed.

Manufacturers shall make all sales of urea foam insulation components expressly subject to the application restrictions listed in the notice described below.

UREA FORMALDEHYDE FOAM INSULATION
SAFETY NOTICE

The Federal Panel on Formaldehyde has concluded that formaldehyde should be presumed to pose a carcinogenic (cancer) risk for humans. Formaldehyde gas may also cause eye, nose, and throat irritation, coughing, shortness of breath, skin irritation, nausea, headaches, and dizziness. People with respiratory problems or allergies may suffer more serious reactions,

especially people allergic to formaldehyde. Women who are pregnant or planning to become pregnant should not be exposed to this product.

The symptoms may appear immediately or not until months after installation.

This product may release formaldehyde gas into your home or building over a long period of time. In some instances the formaldehyde gas cannot be controlled by ventilation or other means.

Application of this product is restricted to exterior sidewalls in both residential and commercial/industrial buildings. A 4-mil thickness plastic polyethylene vapor barrier, or equivalent plastic sheeting vapor barrier, shall be installed between the urea formaldehyde foam insulation and the interior space of the home or building in all applications.

If you have health concerns, call your doctor. Also, call the installer or manufacturer of the material.

(PLEASE PRINT OR WRITE LEGIBLY)

PURCHASER NAME OR NAMES_____

PURCHASER ADDRESS_____CITY_____ZIP_____

PURCHASER PHONE NUMBER: Home ( )_____Work ( )_____

LOCATION OF INSTALLATION IF DIFFERENT FROM ABOVE

LOCATION ADDRESS_____CITY_____ZIP_____

The Purchaser acknowledges he or she has read and understands this notice.

Signed X_____Date_____

Signed X_____Date_____

THE FOLLOWING INFORMATION IS TO BE COMPLETED BY THE INSTALLING CONTRACTOR

CONTRACTOR'S NAME_____

CONTRACTOR'S ADDRESS_____CITY_____ZIP_____

CONTRACTOR'S STATE LICENSE NUMBER_____

NAME OF MANUFACTURER_____

MANUFACTURER'S ADDRESS_____CITY_____ZIP_____

MANUFACTURER'S PHONE NUMBER ( )_____

TEMPERATURE OF OUTSIDE AIR AT START OF INSTALLATION_____°F

	BATCH NUMBER	EXPIRATION DATE	TEMPERATURE (START OF INSTALLATION)
RESIN	_____	_____	_____°F
FOAMING AGENT	_____	_____	_____°F

STEPS THE INSTALLING CONTRACTOR MUST FOLLOW

1. The installing contractor is responsible for mailing this completed notice to the following address within 48 hours after completion of installation. Mail one copy to:

   Executive Director
   Energy Resources, Conservation and Development Commission
   1516 9th Street
   Sacramento, CA 95814

2. Give one copy to the Purchaser.
3. The installing contractor shall keep one copy of this completed notice for a period of not less than three years.

3. **Severability of provisions.** If any provision of Section 1553 (m) (1) or (2), or the application thereof to any person or circumstances, is held invalid, the remaining provisions, or the application of such provisions to other persons or circumstances, shall not be affected thereby.

(n) **Vermiculite in loose fill form.**

1. **Composition.** Vermiculite loose fill insulation shall be produced by the expanding or exfoliating of natural vermiculate or by grading and heating.

2. **Thermal performance.** Determination of the thermal performance shall be in accordance with ANSI/ASTM C 177-76, ANSI/ASTM C 236-66 or ANSI/ASTM C 615-76 at the manufacturer's option.

3. **Density.** Density shall be determined according to installed design density. All tests except the ANSI/ ASTM E 84-79 test shall be conducted at the installed design density.

4. **Resistance to combustion.** Resistance to combustion shall be determined by the use of the Attic Floor Radiant Panel Test, as described in the United States General Services Administration insulation standard HH-I-515D as amended October 11, 1979.

5. **Identification.** Containers of vermiculite shall be marked with the type (pouring or pneumatic), the net weight and the manufacturer's recommendations for installation including minimum thickness, maximum coverage and installed design density to provide the levels of thermal performance shown. Manufacturer's installation recommendations shall include precautions according to the *California Electric Code* Section 410-66.

Products which may be used for pressure fill retrofit wall application shall be marked with the recommended wall density to prevent settling and separately marked with the tested thermal performance for such applications.

Authority: Sections 25402(a) and 25920, Public Resources Code.

Reference: Sections 25920-25922, Public Resources Code.

HISTORY:

1. Amendment of subsection (a) (9) filed 4-2-79; effective thirtieth day thereafter (Register 79, No. 14).

2. Editorial correction of subsection designations with subsection (l) (4) (Register 79, No. 17).

3. Amendment filed 8-10-81; designated effective 9-22-81 (Register 81, No. 33).

4. New subsection (m) (2) (J) filed 9-11-81; effective thirtieth day thereafter (Register 81, No. 37).

5. Editorial correction of subsection (k) (3) (B) filed 1-13-82 (Register 82, No. 3).

6. Amendment of subsections (a) (5) and (a) (8) filed 5-5-82; effective thirtieth day thereafter (Register 82, No. 19).

7. Editorial correction of subsection (m) printing error (Register 82, No. 44).

APPROVAL OF TESTING LABORATORIES

Sec. 12-13-1554.

(a) Except as provided in subsection (b), laboratories shall be approved using the procedures described in the Criteria for the Approval of Testing Laboratories, dated October 27, 1978. The Executive Director shall approve any laboratory that meets the standards described in the Criteria for the Approval of Testing Laboratories, dated October 27, 1978. A testing laboratory shall have the right to appeal to the full Commission any denial of approval by the Executive Director.

(b) Up to and including September 30, 1982, laboratories shall be approved either upon accreditation by the United States Department of Commerce National Voluntary Laboratory Accreditation Program or as stated in the preceding paragraph, at the manufacturer's option. After September 30, 1982, laboratories shall only be approved upon accreditation by the United States Department of Commerce National Voluntary Laboratory Accreditation Program.

Authority: Section 25218(e), Public Resources Code.

Reference: Sections 25915(a) and 25921, Public Resources Code.

HISTORY:

1. Amendment filed 8-10-81, designated effective 9-22-81 (Register 81, No. 33).

CERTIFICATION

Sec. 12-13-1555.

(a) No insulating material shall be sold or installed in California on or after September 22, 1981, unless the manufacturer has certified that the material complies with the provisions of this article.

(b) The manufacturer shall submit a certification statement to the Executive Director for each type of insulating material. Such statement shall contain the following information:

1. Name of the manufacturer.

2. A description of the type of insulating material being certified in sufficient detail to permit its identification. The description may include information sheets, brochures, a sample label for the product or similar information.

3. Test results from an approved laboratory.

4. A description of the basis for ensuring that all the insulating material of the type being certified complies with the requirements of this article. Such description shall include, but not be limited to a description of the frequency of testing of the material, the quality

assurance program, and any third-party inspections or testing used by the manufacturer.

5. A declaration that the insulating material complies with the requirements of this article.

6. The wording of the certification seal, if such seal consists of a statement pursuant to Section 1557 (b) (2) of this article.

(c) Every certification statement shall be dated and signed by the manufacturer attesting to its truth and accuracy. Where the manufacturer is either a corporation or a business association, the certification statement shall be dated, signed and attested to by a responsible official thereof.

(d) Within 45 days after receipt of a certification statement, the Executive Director shall forward, to the manufacturer, an acknowledgment that the statement has been received and that it is complete and accurate on its face.

(e) Certification of the insulation material shall be deemed to occur upon forwarding of the acknowledgement by the Executive Director. If acknowledgment is not forwarded in a timely manner, certification shall be deemed to occur on the 45th day after receipt of the certification statement.

(f) The statement of test results required in the certification may be based upon tests conducted prior to the adoptive date of this article if: (1) the same test was conducted within two years of the date of adoption, (2) the laboratory at which the tests were conducted has been approved for those tests as of the date of the certification statement, and (3) the laboratory certifies that the test and product are the same as the test and product referred to in the statement of test results.

Authority: Section 25218(e), Public Resources Code.

Reference: Sections 25921 and 25921.1, Public Resources Code.

HISTORY:

1. Amendment of subsections (a), (b) (4), (b) (6) and (f) filed 8-10-81; designated effective 9-22-81 (Register 81, No. 33).

QUALITY ASSURANCE (Reserved)

Sec. 12-13-1556.

Authority: Section 25218 (e), Public Resources Code.

Reference: Section 25921.1, Public Resources Code.

HISTORY:

1. Repealer filed 8-10-81; designated effective 9-22-81 (Register 81, No. 33).

IDENTIFICATION

Sec. 12-13-1557.

(a) Except as specified in subsection (b), Item 3, of this section, no insulation shall be sold in California on or after September 22, 1981, unless the insulating material, container, bundle or similar packaging material bears a visible Commission approved statement certifying that a representative sample of the insulation material has been tested and approved by an approved laboratory and complies with the requirements of this article.

(b) The Commission-approved statement shall consist of either:

1. A design or statement approved by the Executive Director, or

2. An identification of the manufacturer and any statement that the material meets the quality standards of the State of California.

3. A statement that the material meets the quality standards of the State of California included in the bill of lading shall meet the requirements of this section only if the product is being shipped in bulk, or the container or product is not otherwise labeled by the manufacturer and the product is being sold to its ultimate user.

(c) Any representation of thermal performance which appear on any label, literature, advertising or any other writing intended for the public shall be consistent with the certification testing results and derating required by this article.

(d) Any insulation with facings and membranes for which the flame spread exceeds 25 when tested with facings and membranes exposed to the flame during the ANSI/ASTM E 84-79 test must be clearly labeled with a statement that the product may be highly combustible if used in an exposed application. This subsection shall not apply to any product meeting the requirements of Sections 2602.1-2602.6 of the 1994 *Uniform Building Code.*

Authority: Section 25218(e), Public Resources Code.

Reference: Section 25921, Public Resources Code.

HISTORY:

1. Amendment of subsections (a) and (c) filed 8-10-81; designated effective 9-22-81 (Register 81, No. 33).

INSPECTIONS

Sec. 12-13-1558.

After September 22, 1981, the Commission may, upon the consent of the owner or lessee, or upon securing a search warrant, have access, during normal working hours, to the premises of manufacturers, distributors and retailers of insulating material sold for installation within the state for the purpose of determining compliance with the standards promulgated pursuant to Chapter 10.5 of the *California Public Resources Code*. Such access shall be for the purposes of obtaining representative samples of subject insulation and inspecting records and documents pertaining to tests by approved testing labs.

Authority: Section 25218 (e), Public Resources Code.

Reference: Section 25926, Public Resources Code.

HISTORY:

1. Amendment filed 8-10-81; designated effective 9-22-81 (Register 81, No. 33).

PERFORMANCE TESTS

Sec. 12-13-1559.

The Commission may conduct, or may contract with others to conduct, independent performance tests of representative samples of insulation sold in the state to determine compliance with standards adopted pursuant to Chapter 10.5 of the *California Public Resources Code*. Such tests shall form the basis for instituting enforcement proceedings.

Authority: Section 25218 (e), Public Resources Code.

Reference: Section 25926, Public Resources Code.

HISTORY:

1. Amendment filed 8-10-81; designated effective 9-22-81 (Register 81, No. 33).

COSTS OF INSPECTION AND TESTING (Reserved)

Sec. 12-13-1560.

Authority: Section 25218 (e), Public Resources Code.

Reference: Section 25926, Public Resources Code.

HISTORY:

1. Repealer filed 8-10-81; designated effective 9-22-81 (Register 81, No. 33).

ENFORCEMENT (Reserved)

Sec. 12-13-1561.

Authority: Section 25218 (e), Public Resources Code.

Reference: Section 25931, Public Resources Code.

HISTORY:

1. Repealer filed 6-26-79; effective thirtieth day thereafter (Register 79, No. 26).

RELEASE OF INFORMATION

Sec. 12-13-1562.
Persons submitting information to the Commission who wish information to be kept confidential shall comply with the provisions of Sections 2501-2511 of the Public Resources Code.

Authority: Section 25218(e), Public Resources Code.

Reference: Sections 25223 and 25921.1, Public Resources Code.

HISTORY:

1. Amendment filed 8-10-81; designated effective 9-22-81 (Register 81, No. 33).

LIABILITY

Sec. 12-13-1563.
Nothing in this article shall be construed as imposing responsibility on manufacturers for misuse of properly labeled insulation.

Authority: Section 25218(e), Public Resources Code.

Reference: Sections 25926 and 25931, Public Resources Code.

HISTORY:

1. Amendment filed 8-10-81; designated effective 9-22-81 (Register 81,No. 33).

INSULATING EXISTING BUILDINGS

Sec. 12-13-1564.

(a) On or after March 25, 1982, if insulating material is installed in an existing building, in any of the applications specified in California Code of Regulations, Title 24, Part 6, Section 118, the installing contractor shall certify that the amount of insulation installed meets or exceeds the requirements of Part 6, Section 118 for that application. Such certification shall be made on completion of the installation by posting in a conspicuous location a certificate signed under penalty of perjury. The certificate shall state the manufacturer's name and material identification, the thermal resistance (*R*-value) of the newly installed insulation, the estimated *R*-value of the original insulation, the total *R*-value, and (in application of loose fill insulation) the minimum contractor installed weight per square foot. This installed weight per square foot shall conform with the manufacturer's installed design density per square foot at the manufacturer's labeled *R*-value.

(b) **Water heater insulation kits.** No water heater insulation kit shall be sold, on or after March 25, 1982, unless it has a thermal resistance of at least R-6 and is so identified.

Each water heater insulation kit sold shall include instructions which are equivalent to the Department of Energy standard practice for the installation of insulation on gas-fired, oil-firedand electric resistance water heaters, 44 Fed. Reg. pages 64703-64705.

Authority: Section 25922, Public Resources Code.

Reference: Section 25922, Public Resources Code.

HISTORY:

1. Amendment filed 8-10-81; designated effective 9-22-81 (Register 81, No. 33).

2. Editorial correction of subsection (a) filed 1-13-82 (Register 82, No. 2).

INTERPRETATION

Sec.12-13-1565.

The General Counsel of the Commission shall make a determination as to the application or interpretation of any provision of this article to any person requesting such a determination. Any such request shall be submitted in writing to the Commission. The Commission shall make written replies to such inquiries and shall widely publish interpretations that have broad application or interest.

Authority: Section 25218 (e), Public Resources Code.

Reference: Sections 25920 and 25922, Public Resources Code.

HISTORY:

1. Amendment filed 8-10-81; designated effective 9-22-81 (Register 81, No. 33).

CHAPTER 12-16-1
ENGINEERING REGULATIONS—QUALITY AND DESIGN
OF THE MATERIALS OF CONSTRUCTION

STANDARD 12-16-1
CALIFORNIA STANDARD FOR EARTHQUAKE-ACTUATED AUTOMATIC GAS SHUTOFF SYSTEMS
(See Chapter 16, *California Building Code* and Chapter 12, *California Plumbing Code.*)

DIVISION OF THE STATE ARCHITECT

Authority: Sections 19180-19183, Health and Safety Code.

Reference: Section 19182, Health and Safety Code.

Division I-CONSTRUCTION

SCOPE

Sec. 12-16-101.
The American Society of Civil Engineers requirements for "Earthquake-Actuated Automatic Gas Shutoff Devices," ASCE 25-97 (copyright 1998 by ASCE), shall be the applicable standard used by the Division of the State Architect for the certification of these devices.

Sec. 12-16-101.1.
Each installation of a customer-owned device that satisfies this standard must be done in accordance with the *California Plumbing Code.*

CHAPTER 12-16-2
ENGINEERING REGULATIONS—QUALITY AND DESIGN OF THE MATERIALS OF CONSTRUCTION

STANDARD 12-16-2
CALIFORNIA STANDARD FOR RESIDENTIAL EXCESS FLOW ACTUATED AUTOMATIC GAS SHUTOFF VALVES

(See Chapter 16, *California Building Code* and for Earthquake-Actuated Gas Shutoff Valves see Section 1211.18, Chapter 12, *California Plumbing Code*.)

DIVISION OF THE STATE ARCHITECT

Authority: Sections 19200-19204, Health and Safety Code.

Reference: Sections 19201.5 and 19202, Health and Safety Code.

Division 1—CONSTRUCTION

SCOPE

Sec. 12-16-201.
The American Society for Testing and Materials (ASTM) F2138–09 Standard Specification for Excess Flow Valves for Natural Gas Service, shall be the applicable standard used by the Division of the State Architect for certification of these devices.

Sec. 12-16-201.1.
Each installation of a customer-owned device that satisfies this standard must be done in accordance with the *California Plumbing Code.*

CHAPTER 12-31C
RADIATION SHIELDING STANDARDS

STANDARD 12-31C-1

DEPARTMENT OF HEALTH SERVICES

Authority: Sections 102, 208 and 25811.

Reference: Sections 102, 208 and 436.5.

ALL HEALING ARTS X-RAY INSTALLATIONS

Sec. 12-31C-101.

All radiation shielding barriers in rooms and enclosures housing radiation machines shall comply with the mandatory standards and appendices in Report No. 35, “DentalX-RAY Protection”; Report 49, “Structural Shielding Design and Evaluation for Medical use of X-rays and Gamma Rays of Energies up to 10 MeV”; and Report No. 51, “Radiation Protection Design Guidelines for 0.1-100 MeV Particle Accelerator Facilities.” Published by the National Council on Radiation Protection and Measurements, 7910 Woodmont Avenue, Bethesda, Maryland 20814.

CHAPTER 12-71
AIR FILTERS

AIR FILTERS
STANDARD 12-71-1

STATE FIRE MARSHAL

DESCRIPTION OF TEST APPARATUS, METHOD AND CLASSIFICATION REQUIREMENTS FOR AIR FILTERS

Sec. 12-71-100.

(a) **Test apparatus.**

1. The test duct, made of M.S. gage galvanized sheet metal reinforced with angle irons, is 21 inches square and $13^{1}/_{2}$ feet long.

2. One end of the duct is tapered to the discharge of a variable-speed blower and the other end is open to discharge. A metal filter frame is provided near the middle of the length of the duct to receive one 20 by 20 inches (nominal) filter unit. Two tightfitting doors, located to permit access to the filter frame, are each provided with a mica window to permit observation of both faces of the filter and conditions in the duct downstream from the filter.

3. Two 1-inch pipe elbows, about 18 inches from the base of the test filter, form gas burner outlets adjusted to provide yellow, wavering flames. The burners consume approximately 4 cubic feet (approximately 1,000 Btu/cubic feet) of gas per minute.

4. With the filter in place the air velocity is adjusted to approximately 200 linear feet per minute as measured at the discharge end of the duct by an Alnor Velometer Anemometer.

(b) **Test method.**

1. Filters are tested clean, that is, unused. The flames are applied for three minutes during which time observations are made of both faces of the filter as to the downstream travel of flame or sparks and the density, duration and character of the products of combustion.

2. Smoke density is measured as the drop in light intensity on a microammeter by means of photoelectric cell mounted a few inches below and about 12 inches inside the discharge end of the duct. The light source, stabilized for light intensity, is mounted 1

inch above the duct directly above the photoelectric cell. The microammeter readings are recorded every five seconds for the first minute and every 10 seconds for the next two minutes.

3. The differences between these readings and the readings taken before the test are plotted against time (the scale being 40 μA and 40 seconds to the inch) with the resulting area under the curve being measured by use of a planimeter or calculated mathematically. This area is a measure of the smoke density produced during the test.

(c) **Classification.** As a result of the tests, air filter units are classified as Class 1 or 2 as indicated below:

1. Class 1 air filter units are those which, when clean, do not produce flames or sparks when attacked by flame and which develop areas under the smoke density curves that are less than 1.5 square inches.

2. Class 2 air filter units are those which, when clean, burn moderately when attacked by flame or emit moderate amounts of smoke or both. These units, although they may be consumed to some extent, do not project flames or extensive sparks that would ignite adjacent combustible materials beyond the discharge end of the duct during the test and do not develop areas under the smoke density curves that are more than 6.0 square inches.

(d) **Adhesive coatings.** Liquid-adhesive coatings used on filters shall have a flash point of 325°F Cleveland open cup tester, or higher.

CHAPTER 12-72-1
PROTECTIVE SIGNALING SYSTEMS

PROTECTIVE SIGNALING SYSTEMS, STANDARD TEST PROCEDURES STANDARD 12-72-1

STATE FIRE MARSHAL

SCOPE

Sec. 12-72-100.

(a) **Basic.** This standard represents the minimum basic requirements for the construction and performance of the protective signaling systems to be listed under this classification. The minimum design, construction and performance standards set forth herein are those deemed as minimum necessary to establish conformance to the regulations of the State Fire Marshal as set forth in the *California Electrical Code*, and when applicable shall be reported on in their entirety by the approved testing laboratory.

(b) **Systems.** This standard covers electrically operated devices and control units designed to transmit and sound alarms, supervisory and trouble signals to be employed in ordinary indoor locations in accordance with the Standards of the National Fire Protection Association for the Installation, Maintenance and Use of Proprietary, Auxiliary and Local Protective Signaling Systems, Remote Station, Nos. 72A, 72B, 72C and 72D, and the *California Electrical Code*. This includes combination protective signaling systems employing nonsupervised sounding circuits; combination fire alarm-communication, -program and -clock systems (hereinafter referred to as combination signaling systems); and audible devices used for both alarm and program or communication purposes.

(c) **Control unit.** A control unit covered by this standard consists of a unit assembly of electrical parts having provisions for the connection of power-supply circuits routed through the control unit equipment by a prescribed scheme of circuitry; signal initiating circuits extended to separate devices by which the operating parts of the control unit are actuated for signals, and to incorporated or separate devices by which the signals are transmitted or indicated to form a coordinated combination system for definite signaling service.

TEST REPORTS

Sec. 12-72-101.

(a) **Test report contents.** The report shall include engineering data, and an analysis comparing the design against Section 12-72-102 (a) through (u); it shall include wiring, diagrams, operating manuals and photographs as set forth in Section 12-72-102 (a), Items 5 and 6; it shall set forth the tests performed in accordance with Sections 12-72-103 (a) through (g) and the results thereof; and shall verify the correctness of the electrical rating required by Section 12-72-107.

(b) **Listed devices.** Electrical wiring, material, devices, combination of devices, fittings, appliances and equipment which have been tested and listed by an approved listing agency for the intended purpose and use need not be individually retested.

The report shall include the catalog number or other readily identifiable marking, the name of the approved listing agency, the laboratory test report number and date. Such individually tested and listed component parts and devices when installed in combination with other devices in a control unit or in a circuit extended from such control unit shall be subjected to the performance standard tests to determine its suitability for use in combination with other component parts, devices, circuits or equipment.

(c) **Listed control units.** Control units which by their design are intended to fully comply with the Standard for the Installation, Maintenance and Use of Proprietary, Auxiliary, Remote Station and Local Protective Association may be investigated and tested in accordance with the Standards for Safety established by Underwriters' Laboratories, Inc., U.L. 864, provided such investigation, test and report incorporates the provisions of the *California Electrical Code*.

(d) **Rejection for cause.** Compliance with these standards will not necessarily mean approval and listing, if, when examined and tested, it is found to have other features which may impair the result intended by these regulations. Unusual constructions may require application of additional performance tests. The State Fire Marshal may refuse to approve any item for cause.

(e) **Systems only.** The standard applies to protective signaling systems as defined in the *California Electrical Code*, and systems or systems components for which application for approval and listing has been filed under the provisions of the *California Electrical Code*.

This standard does not cover manual stations, automatic detectors, automatic transmitters or other actuating devices; nor does it cover separately listed bells, registers or other indicating devices which are not provided as a part of the control unit or matched against the output of sound-reproducing equipment.

(f) **Differing constructions.** A control unit having materials or forms of construction differing from this standard may be investigated and tested according to the intent of this standard, and if found to be substantially equivalent may be given recognition for approval and listing. The office of the State Fire Marshal shall be consulted for general requirements and performance standards.

GENERAL

Sec. 12-72-102.

(a) **Investigation—Report.**

1. A control unit or combination signaling system shall be so designed and constructed as to be practical, reliable and sufficiently durable for its intended installation and use. It shall be suitable for use with acceptable actuating and indicating devices which have been found by investigation to be suitable for use with the control unit or combination signaling system. It shall permit its application in conformity with the regulations set forth in the *California Electrical Code*.

2. The scheme of electrical or electronic circuiting of a control unit or combination signaling system shall provide for the degree of electrical supervision required by the *California Electrical Code*, and when required, shall ensure emergency operation in the presence of a fault condition.

3. Attachment plugs, bells, circuit-breakers, cords, fuse-holders, fuses, lampholders, receptacles, transformers, switches, wires, etc., provided as a part of a control unit or combination signaling system shall be investigated and judged under the requirements established by the *California Electrical Code*, for such devices and also with respect to their suitability for the particular application.

4. Amplifiers used in the fire-protective signaling circuits of combination systems shall be tested in accordance with UL, Inc. Standard 813 (Second Edition 1954, amended 1966 and 1967), Sound Recording and Reproducing Equipment.

   The exchange or replacement of amplifiers from those originally tested with a combination system shall be tested in accordance with UL, Inc. Standard 813 and evaluated in accordance with this standard to determine their suitability for use with the combination system.

5. The report of investigation shall include schematic wiring diagrams tracing the electrical or electronic circuits in their normally supervised and operating condition. Contacts of operating devices shall be shown in the normally supervised position with operating and supervisory power supplied to the equipment.

6. The report of investigation shall include photographs of the equipment with markings identifying the component parts. Operating and maintenance manuals shall be included with each control unit or combination signaling system and shall be attached to the test report and certification.

7. The report of investigation shall include an itemized list of optional equipment that has, by test, been determined as not required to provide a fire alarm signal transmission. The report of investigation shall include routing of circuits for any equipment or devices which are not necessary for the transmission of a fire alarm signal.

(b) **Marking.**

1. Control units and combination signaling systems shall be plainly and permanently marked with a nameplate bearing the manufacturer’s name, model number and electrical rating. Enclosures and castings shall have die stamped or cast identifying numbers or other readily identifiable markings. Component parts shall be fully described or identified by manufacturer’s name and model number.

2. A wiring diagram of the control unit or combination signaling system shall be attached inside the control cabinet or metal ware enclosure.

3. An audible alarm silencing switch when provided, shall be marked to indicate its normal position unless it is of the automatically restoring type. A permanently attached metal or equivalent sign shall bear the following words, “Do not operate the audible alarm silencing switch until the fire department has been notified." The trouble signal

silencing switch, unless of the automatically restoring type, shall be marked to indicate its normal on position.

4. Terminal connections for the power supply shall be marked or identified as required by the *California Electrical Code*.

5. Installation wiring terminals or leads shall be marked or otherwise plainly evident.

6. A control unit designed for use with automatic detectors shall be marked for use with nonrestoring types of detectors only, unless the control unit provides signal lock-in performance required by Section 12-72-103 (b), Item 14.

7. A control unit designed for use with limited-energy circuits shall be marked to identify the particular circuits in which the energy is limited.

8. The maximum impedance of each actuating circuit shall be marked when the value for successful operation is less than 100 ohms.

9. A control unit designed to limit the duration of an alarm signal by means of a time-limit cutout shall be marked to indicate the time for which it is to be adjusted; nonadjustable time-limit cutouts shall be marked to indicate time at which it will operate. [See Sections 12-72-103 (l), Items 1 and 2.]

10. Equipment required to be mounted in a definite position in order to function properly shall be marked to indicate correct mounting position.

(c) **Frame, enclosure and metalware.**

1. Control units and combination signaling systems shall be installed in locked substantial cabinets or metalware enclosures and shall be of a type expressly designed for the service for which they are used. Control unit cabinets and combination signaling system metalware enclosures enclosing alarm signaling circuits shall be provided with integral key locks.

2. Control unit cabinets and combination signaling system metalware enclosures shall be so formed and assembled that they will have the strength and rigidity necessary to resist the abuses to which they are liable to be subjected, without adversely affecting their performance, and without increasing fire hazard due to total or partial collapse with resulting reduction of spacings, loosening or displacement of parts, or other serious defects.

3. Electrical parts of a control unit or combination signaling system shall be so located or enclosed that suitable protection against accidental contact with uninsulated hazardous live parts will be provided.

4. Operating parts, such as gear mechanisms, relays and similar devices, shall be protected against fouling by dust, insects, or by other material which might impair their operation, by means of individual protection or dust-tight cabinets.

5. The thickness of cast metal for an enclosure shall be as indicated in Table 12-72-1A; except that cast metal of lesser thickness may be used if upon investigation it is shown that it has the equivalent mechanical strength.

6. Sheet metal enclosures for a control unit or combination signaling system shall be investigated and listed by a nationally recognized testing laboratory for its intended purpose or use, or shall be not less than indicated in Table 12-72-1B.

7. An enclosure shall have suitable means for mounting, accessible without disassembling any operating part except removal of a completely assembled panel such as a relay panel.

8. An enclosure cover shall be hinged if it gives access to fuses or any other overload-protective device, the normal functioning of which requires renewal, or if it is necessary to open the cover in connection with the normal operation of the control unit or combination signaling system.

9. Enclosure covers accessible for service only may be unhinged if, upon investigation, they are found to be suitable for the purpose. Unhinged covers shall be securely held in place by screws or equivalent fastening devices requiring the use of a tool for its removal.

10. Cabinets or compartments for housing of primary batteries shall be key locked with provisions for protection against moisture or movement. Metal cabinets shall be of approved design constructed of sheet iron or steel not less than No. 14 manufacturer's standard gage.

11. Compartments for storage batteries shall have a total volume not less than twice the volume occupied by the batteries. Ventilating openings shall be provided, and so located to permit dispersion of gas while the battery is being charged at the highest rate permitted by the means incorporated in the unit.

12. The interior of the storage battery compartment shall be protected against detrimental action by the electrolyte. The compartment shall be so located or enclosed that the equipment of the signaling system will not be adversely affected by battery gases.

13. Ventilating openings shall be screened with wire screening having wires of not less than No. 16 AWG, expanded metal mesh or perforated metal of not less than 0.042 inch in thickness. No opening in wire screening, metal mesh or perforated metal shall exceed $^{1}/_{2}$ square inch in area.

14. A compartment enclosing electrical parts shall not be open to the floor or other support on which the equipment rests.

(d) **Protection against corrosion.** Iron and steel parts shall be protected against corrosion by enameling, galvanizing, plating or other equivalent means. This includes all parts upon which proper mechanical operation may depend. It does not apply to bolts, screws, washers or similar parts, if corrosion will not impair operation of the equipment. Stainless steel, polished or treated,

does not require additional protection. Bearings shall be of such design and material to ensure against binding due to corrosion.

(e) **Insulating materials.**

1. Base for support of live-metal parts shall be of noncombustible, moisture-resistant, insulating material commonly recognized as suitable for support of live-metal parts. A base shall withstand the most severe conditions liable to be met in service.

2. Bases mounted on metal surfaces shall be provided with an insulating barrier from the mounting surfaces unless all live-metal parts are staked, upset, sealed or otherwise prevented from loosening to prevent parts and ends of terminal screws from coming in contact with the supporting surface.

3. Countersunk, sealed parts of control units shall be covered to a depth of not less than $^{1}/_{8}$ inch with a waterproof insulating compound which will not melt at a temperature 15°C higher than the normal operating temperature of the assembly. In no case shall such insulating compound melt at less than 65°C.

(f) **Mounting parts.**

1. All parts of control equipment shall be securely mounted in position to prevent loosening or turning if such motion may adversely affect normal operation of the control equipment. A switch, lampholder, attachment-plug receptacle or plug connector shall be mounted securely and, except as noted in Item 3, shall be prevented from turning. See Item 4.

2. The requirement that a switch be prevented from turning may be waived if all four of the following conditions are met:

   A. The switch is to be of a plunger or other type that does not tend to rotate when operated (a toggle switch is considered to be subject to forces that tend to turn the switch during normal operation of the switch).

   B. The means of mounting the switch is to make it unlikely that operation of the switch will loosen the switch.

   C. The spacings are not to be reduced below the minimum acceptable values if the switch does rotate.

   D. Normal operation of the switch is to be by mechanical means rather than by direct contact by persons.

3. A lampholder of a type in which the lamp cannot be replaced (such as a neon pilot or indicator light in which the lamp is sealed in by a nonremovable jewel) need not be prevented from turning if rotation cannot reduce spacings below the minimum acceptable values.

4. The means for preventing the turning mentioned in Section 12-72-103 (f) is to consist of more than friction between surfaces—e.g., a suitable lockwasher, properly applied, is acceptable as the means for preventing a small stem-mounted switch or other device having a single-hole mounting means from turning.

5. Uninsulated live-metal parts, including terminals, shall be secured by methods other than friction between surfaces, to prevent turning or shifting that may result in reduction of any required spacings. Contact assemblies shall be so secured that alignment of contacts will be ensured.

(g) **Grounding.** Cabinets, metalware enclosures and noncurrent carrying metal parts shall be grounded as required by the *California Electrical Code*. Equipment grounded by a multiple-conductor cord shall have a fixed contacting member in the attachment plug for connection of the grounding conductor. The grounding conductor shall be green-identified and shall not be used as a circuit conductor.

(h) **Operating mechanisms.**

1. Parts and motors shall be suitable for the particular applications and shall be of sufficient mechanical strength and capacity to withstand the stresses to which they will be subjected in operation without introducing any hazard.

2. Cams, signaling wheels and similar parts shall be fastened to prevent loosening or independent turning. Adjustable parts and adjusting screws shall have provisions to prevent loosening under conditions of use.

3. Electromagnetic devices shall be designed to provide positive electrical and mechanical performance under all conditions of use.

(i) **Current-carrying parts.**

1. Current-carrying parts shall be of nonferrous metal recognized as suitable and of sufficient mechanical strength for the particular application.

2. Except for grounded signaling wheels, bearings, hinges, etc., shall not be used for carrying current between interrelated fixed and moving parts.

(j) **Supply connections.** Control units and combination signaling systems shall be provided with wiring terminals for the connection of conductors of at least the size required by the *California Electrical Code*, for the electrical rating of the equipment.

(k) **Terminal connections.**

1. Wiring terminals shall ensure thorough connections under hard usage. Terminals shall be a suitable pressure wire connector, firmly bolted or held by a screw, except that for No. 8 AWG and smaller wires, a wire binding screw having upturned lugs or the equivalent may be used. Alternate: Binding screws without upturned lugs may be recognized when conductors are fitted with mechanically and electrical secure ring connectors.

2. Wire-binding screws not less than 8-32 may be used at terminal strips, except that a 6-32 screw may be used for No. 14 AWG and smaller wires. Terminal plates shall be not less than 0.050 inch in thickness to provide not less than two full threads in the metal. Terminal plates of less thickness may be recognized when the resistance to stripping of the threads is equal to or greater than two full threads in 0.050-inch-thick terminal plates.

(l) **Raceways and power-supply cord.**

1. Control units shall have provisions for connection of armored cable or conduit. Combination signaling systems may be provided with a flexible cord and attachment cap. The power-supply cord serving the fire alarm signal generator or tone oscillator shall be Type SJ or equivalent. Strain relief shall be provided so that mechanical stress on a flexible cord will not be transmitted to terminals, splices or interior wiring. Power-supply for the signal generator or tone ascillator provided by a cord shall have an attachment cap with a device to prevent its easy removal from the receptacle.

2. Power-supply for clock, communication or program systems shall not be supplied from the fire alarm control unit.

(m) **Internal wiring.**

1. Internal wiring of a control unit or combination signaling system shall consist of suitably insulated conductors for the voltage and temperature attained, and of adequate current-carrying capacity for the service.

2. All conductors in an enclosure or raceway shall be insulated for the maximum voltage of any conductor in the enclosure or raceway.

3. Wireways shall be smooth and free from sharp edges, burrs, fins and moving parts. Holes in sheet metal partitions shall be provided with smooth bushings or shall have smooth well-rounded surfaces.

4. All joints and connections shall be mechanically secure and shall provide a reliable electrical contact without strain on connections and terminals. Stranded conductors clamped under wiring-binding screws or similar parts shall have the individual strands soldered together or equivalent arrangement to ensure reliable connections.

5. Wire shall be neatly arranged and routed, and shall be held in place with clamps, string ties or equivalent unless of sufficient rigidity to retain a shaped form, placed in spaces affording protection against damage during servicing.

(n) **Interconnection of units.**

1. Control units and combination signaling systems shall be interconnected by metallic raceway enclosures or armored cable suitable for the purpose.

2. Cords and wires used to interconnect units within the overall enclosure shall be securely fastened to the enclosure walls by means of clamps or shall be cabled assemblies with strain relief.

3. In combination signaling systems, the control unit audible alarm circuit shall form the alarm signal interconnection. The audible alarm circuit shall be continuous to the terminals of the relay approved for alarm signaling service for the control unit, except that contacts of a combination signaling system power-supply supervisory relay may be included in the circuit.

4. The alarm signal relay shall be firmly attached to the enclosure and shall be a component part of the combination signaling system unit.

5. The interconnection between control units having nonsupervised audible alarm circuits and the combination signaling system shall be in duplicate, connected alternately to two or more signal relays wired in parallel to the oscillator or tone signal relays.

6. Portions of alarm circuits in combination signaling system control panels which are not supervised from the contacts of the audible alarm signal relay to the oscillator or tone signal alarm relays shall not exceed 24 inches in length. They shall be of 600V insulated wire held in place by clamps or equivalent and so located that they will not be subject to handling during use or servicing.

(o) **Capacitors.** Capacitors shall be of materials suitable for their intended use. A paper capacitor shall be impregnated or suitably enclosed to exclude moisture. It shall not be injuriously affected by the temperature attained under the most severe conditions of use. The removal of a capacitor of the plug-in type shall require the use of a tool.

(p) **Coil windings—transformers.**

1. The insulation of coil windings of relays, transformers, etc., shall be impregnated or otherwise designed to exclude moisture.

2. Transformers connected across a power-supply circuit shall be individually housed in noncombustible material.

3. Transformers shall be of the two-coil or insulated type except that an autotransformer may be employed provided the terminal common to both input and output circuits is connected to the grounded supply terminal.

(q) **Overcurrent protection.**

1. Storage batteries provided as part of a control unit, other than primary batteries, shall be protected by overcurrent devices having a rating of not less than 150 percent and not more than 200 percent of the maximum operating load on the battery.

2. System control units and combination signaling system control units shall be protected on the current supply side by overcurrent devices having a rating not more than 150 percent of the maximum normal operating current.

3. Transformers shall be protected on either the primary or secondary side by overcurrent devices having a rating not greater than the continuous duty rating of the transformer unless the current is limited to the same value by other acceptable means.

(r) **Rectifiers.**

1. Rectifiers used direct shall be approved for the purpose and of adequate capacity to maintain voltage regulation between 100 percent of rated voltage at maximum load and 130 percent of rated voltage at no load.

2. A control unit incorporating a battery-charging rectifier shall be provided with meters as part of the assembly or with readily accessible terminal connections for portable meters for determination of battery voltage and charging current.

(s) **Storage batteries.**

1. Storage batteries provided as part of a control unit shall have sealed cells with spray-trap vents. Normal charging shall be by a trickle-charge rectifier. The mounting arrangement shall prevent terminals from contacting terminals of adjacent cells or parts of the battery enclosure. The cells shall permit ready access for checking the specific gravity of the electrolyte.

2. The conditioning charge shall be so limited that with the maximum charge which can be obtained, the battery gases will not adversely affect the control unit.

(t) **Spacings.**

1. A control unit or combination signaling system shall provide reliably maintained spacings between uninsulated live-metal parts, and between uninsulated live-metal parts and dead-metal or noncurrent carrying metal parts not less than those indicated in Table 12-72-1C and Section 12-72-102 (t), Items 3 and 4.

2. The spaces within devices or assemblies which have been individually or as assemblies tested and listed by a nationally recognized testing agency for the intended use need not comply with the provisions of Table 12-72-1C and Section 12-72-102 (t), Items 3 and 4. The report shall note such devices and assemblies by reference to the test report.

3. If a short circuit between uninsulated live-metal parts of the same polarity would prevent the normal signaling operation of the control unit without simultaneously producing a trouble signal, the spacings between such parts shall be not less than those indicated for “other parts" in Table 12-72-1C except in the case of the special devices mentioned in Footnote 2 to the table, the spacing between uninsulated live-metal parts of the same polarity, for any potential of 0-300 volts, shall be not less than $^{1}/_{32}$ inch through air, and the spacing over surface shall be not less than $^{1}/_{16}$ inch unless the smaller over-surface spacings permitted in Footnotes 3 and 4 of Table 12-72-1C.

4. Spacings may be reduced provided a barrier or liner of suitable moisture-resistant insulating material of sufficient mechanical strength to withstand operation of equipment and arcing is used, and is reliably held in place.

(u) **Speakers—sound equipment.** Speakers shall be of an approved type and designed with current capabilities for the intended function and purposes.

PERFORMANCE

Sec. 12-72-103.

(a) **General.**

1. The performance of a control unit or combination signaling system shall be investigated by subjecting a representative sample in commercial form to tests described in Sections 12-72-103 (b) through (q). Insofar as possible tests are to be made in the order indicated by the following test headings.

2. A control unit shall be tested in the position in which it is designed to be installed for proper function.

3. A combination signaling system console or rack is to be placed in a position simulating an actual installation against a vertical wood wall unless by its design, it is obviously intended for installation in the open. If ventilation openings are provided on the rear surfaces, it is to be spaced out 1 inch from the wall.

4. Tests shall be made at rated frequency and voltage. The rated voltage for test purposes is considered to be 120 volts for units marked 110–125 volts, or 240 volts if marked 220–250 volts.

5. Control units intended to be energized by trickle-charged batteries shall be tested at the rated trickle-charge of the battery except for over-and under-voltage tests.

(b) **Normal operation.**

1. A control unit or combination signaling system shall operate reliably and uniformly for all conditions of its intended performance when employed in conjunction with actuating devices, indicating devices, and power supplies to form a combination type indicated by the wiring diagram and supplementary information supplied with it.

2. To determine compliance, actuating devices, indicating devices optional equipment not necessary for transmission of a fire alarm signal, and power supplies are to be connected to the control unit to form a typical combination, and the control unit operated for each condition of its intended performance.

3. A combination signaling system shall be connected to the intended signal initiating control units and devices, optional equipment or devices not necessary for the transmission of a fire alarm signal, signal indicating devices (in sound-reproducing equipment the output impedance and matching load combination which produced the maximum input in the power input test is to be used), and power supplies, and the equipment operated for each condition of its intended performance.

4. Actuating and indicating devices used for testing are to be those specified by the wiring diagram of the equipment, except that substitute devices may be used if the

actuating switching contacts produce equivalent actuation, and if the indicating devices produce equivalent signal indication and circuit loading. Acceptable substitute load devices are those found by investigation to produce the same load conditions as the devices intended to be used with the equipment.

5. The control unit or combination signaling system shall be in the normal circuit supervisory condition prepared for normal signaling operation by being connected to the devices and circuits indicated in Sections 12-72-103 (b), Items 1 through 3.

6. The operation of any actuating device shall cause the equipment to operate the related indicating devices to produce a clearly defined signal of the type for which the combination is designed.

7. A coded fire alarm signal shall consist of not less than three complete rounds of the number transmitted.

8. Fire alarm signals in schools emitted by devices not distinctive in tone or used for other purposes shall be intermittent or continuous sounding signals. The signal, herein referred to as the *California Uniform Fire Code* Signal, shall be given for a period of ten full seconds followed by a silence of five full seconds before the signal is repeated. The signal shall be given for a period of not less than one minute. Conformance requires signal duration in excess of one minute.

9. Control units or combination signaling systems shall have provisions to disconnect time and program signal circuits upon initiation of an alarm signal. Restoration of time, recall or program circuits shall require manual operation of a resetting device in the control unit or combination signaling system console. The resetting device shall be located inside the locked control panel or console, or shall be key-operated. A metal sign having the following words shall be attached adjacent to the switch “Reset switch shall not be operated until building has been determined safe from fire." The wiring diagram required by Section 12-72-103 (b), Item 2, shall include the circuit arrangement.

10. Combination signaling systems designed for use with a coded fire alarm control unit (control unit of type other than continuous ringing) shall be provided with an audible alarm signal relay of the lock-in type. This may be a latching-type relay or an electrical holding circuit.

11. Combination signaling systems designed for use with a continuous ringing fire alarm control unit shall be provided with a *California Fire Code* Signal coding device actuated by the audible alarm signal relay.

12. Combination signaling system using sound-reproducing equipment designed to provide an alarm signal of distinctive tone used for no other purpose is not required to provide a coding device. To be considered as distinctive in tone, the frequency should be not less than 300 cycles higher or lower than any other signal (such as a classroom or program signal) and shall be an undulating tone swinging not less than approximately 100 cycles each side of the mean frequency with a pulse rate of not less than 30 per minute.

13. Combination signaling systems which are so designed that they may have the power supply circuit disconnected or alarm signal output discontinued without a trouble signal shall have provisions to instantly and automatically restore power supply, signal generation and signal output upon actuation of a fire alarm initiating device.

14. The signal indicating resulting from the operation of a noncode fire alarm control unit by automatic detectors having self-restoring contacts shall be maintained automatically by the control unit until a resetting device in the control unit is manually operated.

15. Combination signaling systems designed to have the audible alarm circuit routed through a clockcross-connect or pin board shall not, on removal or relocation of any pin, cause interruption of interference with the fire alarm signal. The circuit arrangement shall be shown on the wiring diagram required by Section 12-72-103 (b), Item 2.

16. Normal operation of fire alarm signaling equipment shall not depend upon a ground connection.

17. A switch and circuit provided for silencing alarm sounding devices shall conform to the following:

    A. Switching to the off-normal position shall automatically transfer the alarm signal to visual warning signal lights which shall not be extinguished until the system is manually restored to normal.

    B. With the system in normal supervisory condition, switching to the off-normal position shall result in an audible trouble signal.

    C. Restoration of the alarm initiating circuit to normal supervisory condition shall result in a trouble signal, unless the silencing switch and its related control circuit is of the automatically restoring type.

    D. The switch shall be located inside of the locked control unit enclosure.

18. Circuits and all related devices of a combination system may have their output regulated providing the minimum setting will allow satisfactory compliance to the *California Electrical Code*, for the total number of sound reproducers that may be served by the system.

(c) **Power input-sound reproducing equipment.**

1. The current or wattage consumption of a combination signaling system utilizing sound reproducing equipment shall not exceed the marked input rating by more than 5 percent when the equipment is operated under normal conditions while connected to a supply circuit of rated frequency and voltage corresponding to the mean of the marked primary voltage rating.

2. For the test specified in Section 12-72-103 (c), Item 1, the audio-input connections of each amplifier of the system are to be connected to an oscillator adjusted to supply a 1,000-cycle signal. All volume and tone controls are to be at their maximum settings,

and normal operating condition is considered to be operational with the audio-input-signal potential adjusted to produce audio-output rating of the amplifier. The tests are to be conducted throughout the range of impedance taps with load impedance of the amplifier.

(d) **Fire alarm signal precedence.**

1. Control units designed to serve more than one type of alarm-initiating device or to utilize the audible alarm devices for more than one type of signaling service shall provide priority for manual box signals, and for fire alarm signals in combination signaling systems.

2. A coded system control unit shall be actuated by one or more initiating devices other than a manual box and by a manual box simultaneously. The manual box signal shall take precedence over other signals.

3. Combination signaling system shall be actuated to transmit a program or sound signal. A fire alarm initiating device shall be actuated while the program or sound signal is being transmitted. The fire alarm signal shall take priority without any interference or garbling of the alarm signal. Each separate type of program, or sound signal, including all-call or individual room signals shall be actuated without interfering with the fire alarm signal.

4. Fault conditions shall be introduced in each piece of optional equipment or device and during such fault conditions a fire alarm initiating device shall be actuated. The fire alarm signal shall be transmitted without interference or garbling of the alarm signal.

(e) **Electrical supervision.**

1. Unless otherwise provided, the circuits formed by conductors extended from the terminals of the control unit or combination signaling system shall be so electrically supervised that a trouble signal will be promptly indicated upon the occurrence of a signal break or ground fault condition of its circuits which would prevent normal operation of the combination, control unit, actuating devices and indicating devices. Electrical supervision of the main operating power, power supply to the oscillator or tone generator shall be provided under the conditions set forth in Sections 12-72-103 (e), Items 2 through 4. The above requirements do not apply to the following type of circuits:

   A. The audible alarm signaling circuits of combination signaling system of the clock-bell program or sound reproducing type, provided all portions of the circuits are used for normal program or signaling purposes not less than once each hour.

   B. Local system circuits intended for use only with sprinkler waterflow alarm or sprinkler-supervisory circuits.

   C. Current and circuits for trouble signals.

   D. Current for alternate operation when source of main power supply is interrupted.

E. Current supply and circuits for supplementary signal devices, or optional equipment not necessary for the transmission of a fire alarm signal, provided that a break or ground fault will not affect operation of the system for required fire alarm signals.

F. Circuit for register or indicating device provided as a part of the control unit.

G. Audible alarm circuits, provided there are suitable terminal facilities for the connection of either multiple circuits, so that a break or ground fault prevents operation of only one of the circuits; or a return loop circuit so that a break or ground fault does not prevent operation of any alarm signal sounding device or appliance with means provided for testing the continuity of the circuit conductors.

H. Circuit for an alarm-indicating device in the same room as the control unit, provided the circuit conductors are installed in a metallic raceway or equivalent to prevent mechanical injury or tampering.

2. Electrical supervision of the main source of operating power. Supervision of a control unit using a rectifier for battery charging shall include supervision of the power supply to the rectifier and the fuse in the load circuit of the battery.

3. Electrical supervision of the power supply to the oscillator or tone generator of a combination signaling system when the signal and its related amplifiers are used for normal room signaling service. The supervisory circuit may be so arranged as to sound the fire alarm control unit trouble signal.

4. Electrical supervision of the signal output of a combination signaling system when the alarm signal oscillator or tone generator and its related amplification devices and circuits are not used for normal signaling.

5. A single break or ground fault in an alarm initiating or indicating circuit, or failure and restoration of the power supply to the control unit, shall not cause transmission of an alarm signal.

6. To determine conformance of a control unit or combination signaling system with the performance and tests requirements of Items 1 through 5, the investigation is to start with the representative system combination in the normal supervisory condition indicated in Section 12-72-103 (b), Item 5; each type of fault to be detected shall be separately introduced in each circuit conductor.

7. If the off-normal position of any normally preset mechanism or any similar part of the control unit or control equipment requires manual restoration to normal position for proper signaling operation of the control equipment, such off-normal position shall be indicated by a trouble signal. Compliance is to be determined by observation during the normal operation test.

8. While the control unit or control equipment is in the supervisory condition, any operation of any manual-switching part that may interfere with normal operation of the equipment of transmission of an alarm signal shall be indicated by a trouble signal.

The control unit or equipment shall be operated for transmission of signals in each position of the manual-switching parts.

(f) **Trouble signals.** Trouble signals shall be distinctive from alarm signals, or other communication or warning signals. They shall be indicated by the continuous sound of an audible trouble signaling device or appliance. The audible signal sounding device or appliance may be common to more than one supervised circuit. Trouble signal sounding circuits may be provided with time limit cut-off devices to provide for intermittent operation of the trouble signal device or appliance. The time limit device or appliance shall provide for the continuous sounding of the trouble signal sounding device or appliance for a period of not less than ten minutes followed by a period of silence not to exceed five minutes.

(g) **Trouble signal silencing switch.** A trouble signal silencing switch shall be provided. Upon operation of the trouble signal silencing switch, the trouble indication shall be transferred to a trouble lamp or other approved visual indicator located adjacent to the silencing switch. Operation of the trouble signal silencing switch shall also remove the time limit cutout from the circuit. The visual indicator shall remain in operation until the silencing switch is restored to its normal position unless the audible trouble signal will be obtained when a fault occurs without restoring the switch to normal position. The silencing switch and its related control circuit may be of the automatically restoring type.

(h) **Control unit input and output current and voltage.**

1. The input or output current of each circuit of a control unit shall not exceed the marked rating of the control unit by more than 10 percent when the unit is operated under conditions of normal use.

2. A limited-energy detector circuit shall conform to the following:

   A. The open-circuit voltage between any two wiring terminals and between any terminal and a grounded circuit part or noncurrent carrying metal part shall not exceed 50 volts when the control unit is connected to a power supply source of rated voltage and frequency.

   B. Overcurrent protection not in excess of 2 amperes shall be provided in such manner that each limited-energy circuit is protected. Current-limiting transformers may be substituted, provided that under condition of short circuit, current flow at the terminals will not exceed 2 amperes.

(i) **Jarring.** The control unit or control equipment installed or supported in the position of its normal use connected to a power supply and in supervisory condition shall withstand jarring from impact or vibration such as may be experienced in service by striking the enclosure. Striking the enclosure shall not cause signaling operation of any part nor adversely affect any subsequent normal operation.

(j) **Temperature.**

1. Materials employed in the construction of a control unit or combination signaling system which have not been investigated and reported on by a nationally recognized testing laboratory as an assembly in the form intended for use shall be investigated

and tested to determine temperature rises that may adversely affect the materials of construction, normal signaling operation of the equipment and fire hazard to building materials.

2. A control unit shall be mounted on a wood panel representative of its manner of installation in service. It shall be connected to a power supply as indicated in Section 12-72-103 (a), Item 4, and operated under representative normal conditions liable to produce the highest temperatures.

3. A combination signaling system shall be set up representative of normal service conditions against a wood panel wall as specified in Section 12-72-103 (a), Item 3, connected to a supply circuit as indicated in Section 12-72-103 (c), Item 1, and operated under representative normal conditions liable to produce the highest temperatures.

4. In control units equipped with time-limit cutouts which are not intended to limit the time of alarm-signal operation, the time-limit cutout shall be shunted out of the circuit for the duration of the test.

5. A control unit or combination signaling system intended to provide impulse signals shall be operated by a testing device to provide one impulse per second, except that if the signal impulses are normally produced by a device which is a part of the control unit or equipment assembly, the test impulses are to be at the rate of normal operation of the device.

6. Circuits shall be loaded representative of maximum load under normal service conditions. Resistors shall be adjusted for maximum wattage dissipation possible under conditions of normal service.

7. Except for coils, temperature readings are to be preferably obtained by means of thermocouples. Temperatures are to be considered as constant when three successive readings taken at intervals of 10 percent of the previously elapsed duration of the test, but not less than five minute intervals, indicate no change. Temperature rise on coils may be determined by the resistance method or mercury thermometers.

8. Horizontal screened or ventilation openings subject to accumulation of dust and lint shall be covered with loose cotton.

9. Materials of construction and fire hazard to buildings shall be considered to be adversely affected if the temperature rise exceeds the limits shown in the following, based on an assumed ambient temperature of 25°C:

   A. 65°C on wood panels or other combustible material or surfaces adjacent to or upon which a control unit may be mounted in service.

   B. 35°C on rubber or thermoplastic insulation.

   C. 60°C on varnished cloth insulation.

   D. 65°C on surface of coil winding of impregnated organic insulation.

E. 125°C on phenolic insulation.

F. 65°C on a transformer enclosure.

G. 65°C on fiber insulation.

H. 30°C at any point on a copper-oxide rectifier.

I. 50°C at any point on a selenium rectifier.

J. 15°C less than melting point of a sealing compound.

K. Rated temperature limit of a capacitor.

L. 65°C on fuses.

M. 350°C on embedded resistor.

10. The test-operating condition shall be continued for a period of not less than:

    A. Operation under a normal supervisory condition until constant temperatures are attained.

    B. Operation for one hour during normal signaling condition of local system control equipment designed for actuation by automatic devices. Includes control units producing a continuous signal until actuating device is restored to normal or until a circuit-resetting device is manually operated.

    C. Operation for 15 minutes during normal signaling condition of a local system control unit intended to be actuated by coded manual fire alarm boxes.

    D. Operation of a rectifier at its maximum rated output until constant temperatures are attained.

(k) **Over- and under-voltage operation.**

1. The design of a signaling system shall provide that the system will perform its intended function at 85 percent and at 110 percent of rated voltage. The operating parts of control equipment shall withstand 110 percent of its rated voltage continuously without injury during the normal supervisory condition.

2. To determine compliance with the higher voltage specified in Item 1, the signaling system is to be subjected to the increased voltage while in its normal supervisory condition until a constant temperature of all of its parts attained but in no case less than three hours and then tested for all signaling conditions. The unit shall not fail to transmit any required signal.

3. To determine compliance with the under-voltage specified in Item 1, the signaling system is to be operated in the normal supervisory condition until constant temperatures of all its parts are attained and then immediately tested for all signaling conditions at the reduced voltage. Reduced voltage is to be achieved by a means that maintains a stable potential of the required value under the most severe conditions of normal loading.

4. Circuits extended from the control unit in which the maximum impedance for successful operation is less than 100 ohms shall have the maximum impedance connected to its circuits during the under-voltage test.

(l) **Time limit cutout.**

1. A time limit cutout arranged to control the duration of a continuous alarm signal shall operate within the range of the time marked for the control unit when tested at an ambient temperature of 25°C ± 2°C. A common coded signal shall complete not less than three complete rounds and a system control unit intended for schools not less than one full minute of signal transmission as specified in Section 12-72-103 (b), Item 8, before operation of the time limit cutout.

2. Except as specified in Item 1, a bell circuit time-limit-cutout shall operate in not less than three minutes nor more than ten minutes when energized continuously at the maximum rated current value of the circuit to which it is connected, tested at an ambient temperature of 25°C ± 2°C.

(m) **Overload.**

1. Under the conditions specified in Items 2 through 4, a current-interrupting device provided as part of, or intended for use with, a signaling system control unit or equipment shall perform in an acceptable manner during an overload test consisting of not less than 50 make and break operations. There shall be no electrical or mechanical failure of the device, nor shall there be any undue arcing, burning, pitting or welding of contacts.

2. A control unit or equipment normally supplied from a grounded circuit shall be tested with all normally grounded parts and the enclosure connected through a 15 ampere fuse to the grounded conductor of the supply circuit.

3. Current-interrupting devices controlling devices on the load side of control equipment power supply terminals shall be tested at 115 percent of rated voltage with a test load equivalent to that which the device is intended to control.

4. Overcurrent devices in control equipment which includes motor-driven devices or intended to include motors on any of its circuits shall be tested under stalled rotor conditions of the motor.

(n) **Endurance.** An operating device included as part of a control unit or combination signaling system shall perform acceptably when tested at the rate and for the number of cycles specified in Table 12-72-1D. When the device controls an electrical load the contacts shall make and break the normal current the device is intended to control for the number of cycles

specified. There shall not be any electrical or mechanical failure of the device, nor shall there by any undue arcing, burning, pitting, or welding of the contacts. The device shall be tested in conjunction with its related components in the assembly by operating the primary actuating device to produce the signals.

(o) **Dielectric tests.**

1. Except for motors rated at $^{1}/_{2}$ hp or less, and 250 volts or less, signaling system control units or equipment shall withstand, without breakdown, the application of a 60-cycle alternating potential of twice rated voltage plus 1,000 volts for a period of one full minute. The test potential shall be applied to the following parts:

   A. Between all normally ungrounded current-carrying parts and the enclosure.

   B. Between all metal current-carrying parts and exposed noncurrent-carrying parts.

   C. Between all current-carrying metal parts of circuits, including transformer windings, operating at different frequencies of potentials.

2. Motors rated less than $^{1}/_{2}$ hp and 250 volts shall withstand for one minute without breakdown, the application of a 60-cycle a.c. potential of 900 volts between the frame and winding.

(p) **Abnormal operation.**

1. A control unit shall be capable of operating under abnormal conditions without emission of flame, molten metal or other manifestation of a fire hazard. Excessive temperatures or burnout is indicative of failure.

2. A control unit connected to a supply circuit of rated voltage shall have its alarm initiating and audible alarm circuits short-circuited until a constant temperature is attained, or burnout occurs, unless the fault results in operation of an overcurrent device which is an integral component part of the unit.

(q) **Burnout tests.**

1. A continuous-duty resistor shall not burn out or be adversely affected while carrying the maximum normal load continuously. An intermittent duty resistor shall carry its maximum rated current on any step for the maximum length of time permitted by limiting devices of the unit.

2. A transformer operated continuously, at the rated voltage and frequency specified by Section 12-72-103 (a), Item 4, with the enclosure grounded and having a load of three times maximum normal load current connected to its output terminals shall not be adversely affected by injury to the enclosure, nor shall any emission of flame or molten metal occur.

3. The testing circuit shall be protected by overcurrent devices having a rating of at least ten times the primary current rating of the transformer. Output terminals of the transformer shall be short-circuited, if such a condition results in less than three times the maximum normal load current being drawn from the secondary. Tests shall be continued until constant temperatures are attained or a burnout occurs. Blowing of the fuse on the primary side of the transformer is not considered to be a failure.

4. If the circuit designs of a control unit or combination signaling system incorporate a time limit cutout or a mercury tube switch wired into the system circuit in such a manner that a short circuit or a ground fault causes the device to carry current in excess of its maximum normal load, it shall withstand the test specified in Items 5 through 7, without introducing a fire hazard.

5. The device is to be tested in the control equipment as it is intended to be normally used and in series with a protective fuse of the marked maximum rating indicated by the markings on the control unit. All openings in the enclosure of the control equipment shall be covered with surgical cotton, and the enclosure is to be connected to ground through a fuse of the same rating as the protective fuse mentioned above.

6. The open circuit voltage of the test circuit is to be within 5 percent of the rated voltage; see Sections 12-72-103 (a), Item 4, and 12-72-103 (c), Item 1, of the control equipment circuit in which the device is installed, except that a higher voltage may be used if agreeable to those concerned. The source of current and the test circuit should have sufficient capacity to deliver 1,000 amperes when the system is short-circuited at the testing terminals.

7. Ignition of the cotton, or of insulation on circuit conductors, emission of flame or molten metal from the enclosure, blowing of the fuse in the grounding conductor, damage to other parts of the control equipment, or any evidence of a fire hazard is to be deemed as failure. Burnout of pigtail leads or a thermal element, or welding of contacts, is not to be considered as a failure.

PRINTED WIRING BOARDS

Sec. 12-72-104.

(a) **General.**

1. These requirements cover printed wiring boards that are intended for use in fire protective signaling equipment. The acceptability of the combination of the printed wiring board and the electric equipment is to be determined by the State Fire Marshal.

2. Printed wiring boards conforming to ASTM Grade FR-5 when tested in accordance with ASTM Designation D-1867, may be used in protective signaling equipment.

3. Throughout these requirements, the term “printed wiring" is used to designate a pattern of conductive material formed in a predetermined design on the surface or surfaces of a common insulating base, and intended primarily to provide point to point electrical connections, shielding or to form inductors. The term “printed wiring board" is used to designate the combination of a printed writing pattern and the common insulating base completely processed as far as the printed portion is concerned. The

term “printed wiring assembly" is used to designate a printed wiring board on which separate components have been added.

4. Printed wiring boards which do not conform to Item 3, shall be tested in accordance with the procedures set forth in Sections 12-72-104 (b) through (d).

(b) **Insulating material.** Insulating material on which printed wiring is applied shall be suitable for the sole support of uninsulated live parts and for the temperature involved, and shall have suitable mechanical strength.

(c) **Conductors.**

1. Current-carrying parts of printed wiring shall be of copper, copper-alloy, aluminum, silver or other material having similar corrosion-resisting properties.

2. Conductor surfaces shall be substantially free of wrinkles, pits, blisters, corrosion or other imperfections before and after being subjected to the conditions described in Item 6.

3. Printed wiring shall be so applied to the insulating material that the average strength of the bond between the printed wiring and the insulating base for each individual strip of conductor will not be less than 1 pound per inch of width of the printed wiring when samples are tested under the conditions described in Items 4 through 7.

4. The samples of printed wiring boards are to be without components (capacitors, resistors, etc.) and, except at points where connections are to be made, the conductors are to be free from solder. If the normal production soldering operation results in a coating of solder on the conductors, the samples are to be subjected to a simulated soldering operation, using a material other than solder, at the normal soldering temperature, or an equivalent arrangement, in order to obtain the same thermal effect on the conductors.

5. A uniform width of the printed wiring is to be peeled from the insulating material for a distance of $^{1}/_{4}$ inch at a uniform rate of approximately 12 inches per minute, with the angle between the printed conductor and the insulating material at not less than 85 degrees, and the force required to separate the conductor from the insulating material measured. Three determinations are to be made on each of six samples, and the average strength of the bond for each individual strip or conductor determined.

6. Following the test described in the preceding paragraph, three of the samples are to be placed in an air oven maintained at the temperature determined by the following expression for 1,344 consecutive hours:

   $T = 1.02 (R + 15 + 273) – 273$, where
   T = oven temperature in °C.
   R = temperature in °C for which the printed material is to be recognized (75°, 90°, 105° or 125°C).

The remaining three samples are to be placed first in the air oven for 168 hours and then in a moist air chamber having a relative humidity of 83.5–86.5 percent at a temperature of 30.5°–33.5°C, for 168 hours, and the cycle repeated for a total of 1,344 hours (four 168-hour periods in the air oven alternating with four 168-hour periods in the moist air).

7. After 1,344 hours under the conditions described in the preceding paragraph, the six samples are to be allowed to cool to room temperature and then subjected to the test described in Item 5 and the average strength of the bond determined for each sample.

8. The use of coatings over printed wiring will be given special consideration with respect to their effect on the strength of the bond between the printed wiring and the insulating material.

(d) **Dielectric strength.**

1. The average dielectric breakdown potential for six samples of printed wiring boards that have been conditioned in an air oven for 1,344 hours at the temperature determined by the formula in Section 12-72-104 (c), Item 6, shall be not less than 80 percent of the average dielectric breakdown potential for six samples of printed wiring boards that have not been subjected to such conditioning.

2. The 12 samples may be provided without components (capacitors, sockets, resistors, etc.) but are to be samples that have been subjected to the complete production soldering process. The test potential is to be obtained from a suitable transformer, the output voltage of which can be regulated. The potential is to be increased gradually from zero, at the rate, of approximate 75 volts per second, until dielectric breakdown occurs. Three different locations on each sample, with different spacings between conductors, if possible, are to be tested. The locations selected are to be the same for all samples. The average dielectric breakdown potentials for each group of six samples for each location is to be determined. The average value for each location for the samples that have been conditioned is to be not less than 80 percent of the average value for the corresponding location for the samples that have not been conditioned.

RELAYS FOR PROTECTIVE SIGNALING SERVICE

Sec. 12-72-105.

(a) **Test conditions.** Relays which have not been qualified as approved for use with protective signaling systems by investigation and report from an approved listing agency shall have its suitability for use in a protective signaling system evidenced by an investigation and report by an approved testing laboratory which shall include certification that the relay conforms to the minimum requirements of the *California Electrical Code*. The test report shall include, but is not limited to:

1. Over- and under-voltage operation per the *California Electrical Code*.

2. The insulation of coil windings of relays shall be such as to resist the absorption of moisture.

3. Temperature readings on the coil and insulation under normal operation at a constant temperature (temperature may be considered constant when three succeeding readings at not less than five minute intervals indicate no change in temperature).

4. Overload test consisting of 50 operations at 115 percent of rated voltage with a test load being that which the relay is to handle.

5. Endurance test consisting of 40,000 cycles of coded or noncoded signal impulses at rated load and voltage.

6. Dielectric strength test without breakdown by application of 60 cycle a.c. at twice rated voltage plus 1,000 volts for a period not less than one minute.

(b) **Acceptance criteria.** There shall be no electrical or mechanical failure, nor any undue pitting, burning or welding of contact during any test.

SEMICONDUCTOR TESTS

Sec. 12-72-106.

(a) **General.** Semiconductors shall be investigated to determine their suitability for application under all the environmental conditions to which they will be exposed in service.

The performance tests of the complete device are intended to show the effects of these conditions. The prescribed tests may be supplemented where conditions exceeding those represented by the tests indicated herein may be encountered.

(b) **Test procedure.**

1. **Temperature.** The system combination is to be connected as in the normal operation test and operated in an oven at 85°C. It is then to be operated in a refrigerator at 0°C. After temperature equilibrium has been maintained in both cases, the unit shall operate as in the normal operation test.

2. **Humidity.** The system combination is to be connected as in the normal operation test, and placed in a humidity cabinet maintained at 85 percent humidity, 32°C, for a period of 48 hours. At the end of this time, the unit shall operate as in the normal operation test.

3. **Transient voltage.** The system combination shall be subjected to the transient voltages caused by the collapse of the field of a 2-kilovolt-ampere transformer switched on and off on a random basis for 500 cycles.

4. **Acceptance criteria.** There shall be no adverse effects on the system combination and the unit shall operate as intended.

(c) **Temperature.** A semiconductor shall be operated so as to obtain not more than 75 percent of its rated operating temperature during the normal supervisory condition indicated in Section 12-72-103 (b), Item 5. The rated operating temperature of a semiconductor shall not be exceeded under any condition of operation of the complete unit which produces the maximum temperature dissipation of its components, including the over-voltage test described in Section 12-72-103 (k), Items 1 and 2, and the variable ambient temperature test described in Section 12-72-106 (b), Item 1.

ELECTRICAL RATING

Sec. 12-72-107.
The electrical rating of a control unit or combination signaling system shall be marked as provided in Section 12-72-102 (b). The following ratings shall be marked on the nameplate or may be marked on supplemental labels at the terminal strips:

(a) Each power supply circuit—the voltage, frequency and maximum input in amperes or watts.

(b) Each alarm initiating circuit—maximum current output and maximum open-circuit voltage if different than the power supply circuit.

(c) Each control unit audible alarm or indicating circuit—maximum current output and the maximum open-circuit voltage if different than the power supply circuit.

(d) Each combination signaling system sound reproducing control audible alarm circuit-output rating in watts.

(e) Supplementary—device circuit—maximum current load that may be connected, and the voltage and frequency of supply power other than that of the control unit.

(f) Fuses—maximum ampere rating of the fuse that may be installed in each fuseholder provided as part of the control unit or combination signaling system.

TABLE 12-72-1A—CAST-METAL ENCLOSURES

DIMENSION OF AREA	MINIMUM THICKNESS IN INCHES	
	Die-cast metal	Castings other than die-cast
24 square inches or less, no dimension greater than 6 inches	$^{5}/_{64}$ *	$^{1}/_{2}$
More than 24 square inches or any dimension exceeding 6 inches	$^{3}/_{32}$	$^{1}/_{2}$
Threaded conduit opening	$^{1}/_{4}$	$^{1}/_{4}$
Unthreaded conduit opening	$^{1}/_{8}$	$^{1}/_{9}$

* Suitable reinforcing ribs may subdivide larger areas.

TABLE 12-72-1B—SHEET-METAL ENCLOSURES

MAXIMUM DIMENSIONS		MINIMUM THICKNESS IN INCHES *		
		Steel		
Linear dimension	Surface area in square inches	Zinc coated	Uncoated	Copper, brass or aluminum
24	360	0.057 (16)	0.054 (16)	0.075 (12)
48	1,200	0.071 (14)	0.067 (14)	0.095 (10)
60	1,500	0.098 (12)	0.095 (12)	0.122 (8)
Over 60	Over 1,500	0.127 (10)	0.124 (10)	0.153 (6)

Note: Numbers in parentheses are the galvanized sheet gage for zinc-coated steel, manufacturer's standard gage for uncoated steel, American wire gage for nonferrous metal.

* At areas where armored cable or conduit is to be attached, sheet metal shall be of such thickness or so formed or reinforced that it will have the stiffness equivalent to uncoated flat sheet steel 0.054 inch thickness; when a supporting frame or equivalent reinforcing by forming or flanging is provided, thicknesses may be reduced by two gage numbers.

TABLE 12-72-1C—MINIMUM ACCEPTABLE SPACINGS IN INCHES[1, 2]

POTENTIAL INVOLVED IN VOLTS	AT INSTALLATION-WIRING TERMINALS		AT OTHER PARTS	
	Through the air	Over the surface of insulating material	Through the air	Over the surface of insulating materials
0-150	1 3/4	1 3/4	1 4/8	1 4/4
151-300	1 3, 5/8	1 3/8	1 4/4	3 4/8
	1 3/4			

[1] Measurements are to be made while wire with adequate capacity for the applied load is connected to each terminal as it would be in actual installation. In no case is the wire to be smaller than No. 14 AWG.

[2] At fixed parts of rigidly clamped special assemblies of live parts and insulating separators (such as contact springs on relays or cam switches) that are wired at the factory, the spacings may be less than those indicated, but not less than 1/16 inch for 0-150 volts, and not less than 3/32 inch for 151-300 volts, through air and over surface, except as noted in the following footnotes.

[3] Nor less than 3/64 inch through air and over surface for 250 volts or less if the equipment which the component part controls does not consume more than 375 volt-amperes or more than 5 amperes.

[4] Not less than 1/32 inch through air and over surface for a circuit involving a potential or not more than 30 volts and supplied by a primary battery or by a standard Class 2 transformer or by a suitable combination of transformer and fixed impedance having output characteristics in compliance with what is required for a Class 2 transformer.

[5] The spacing through air at installation-wiring terminals may be less than 1/4 inch but not less than 1/8 inch if the terminals are recessed in insulating material or have insulating barriers so as to confine loose strands of conductors sufficiently to make it unlikely that the terminals will be grounded or short-circuited.

TABLE 12-72-1D—ENDURANCE TEST

NORMAL SIGNALING PERFORMANCE OF DEVICE	TOTAL NUMBER OF CYCLES DEVICE TO BE TESTED	CYCLES PER MINUTE
Continuous noncode signal for each operation of alarm signal initiating device	6,000	6
A number of coded or noncode impulses for each operation of alarm signal initiating device	40,000	60
Preliminary coded or noncode signal impulses followed by continuous signal impulses after each operation of alarm signal initiating device	40,000 resetting of device after each group of 40 impulses	— 60
Relays	40,000	60

CHAPTER 12-72-2
PROTECTIVE SIGNALING SYSTEMS

SINGLE- AND MULTIPLE-STATION FIRE ALARM DEVICES MECHANICALLY OPERATED TYPE
STANDARD 12-72-2

STATE FIRE MARSHAL

SCOPE

Sec. 12-72-200.

(a) **Basic.** This standard represents the minimum basic requirements for the construction and performance of single and multiple-station fire alarm devices intended for indoor installation, and to be listed under this classification. The minimum design, construction and performance standards set forth herein are those deemed as minimum necessary to establish conformance to the regulations of the State Fire Marshal.

(b) **Definitions.** For the purpose of this standard, the following definitions shall apply:

1. **Fire alarm device, multiple station.** Two or more gas-operated single station units interconnected by metal tubing to one or more remote alarm-sounding devices.

2. **Fire alarm device, single station.** A self-contained fire alarm system comprising a heat detector, an alarm-sounding device and a stored energy source incorporated in one integral package. The basic types are gas operated units and spring-wound units.

3. **Gas-operated type.** A device having a temperature-sensitive eutectic element; compressed gas, usually in a liquid state in a cylinder; and a sounding means, such as a horn or whistle. When the eutectic element melts, the compressed gas is released in a gaseous state through the alarm-sounding device.

4. **Spring-wound type.** A device having a temperature-sensitive bimetal or eutectic element and a spring-wound type mechanism with clapper mounted within a bell housing. The snap action of the bimetal or melting of the eutectic element releases the spring mechanism resulting in a bell-type sound.

TEST REPORTS

Sec. 12-72-201.

(a) **Test Report contents.** The report shall include engineering data, and an analysis comparing the design against Sections 12-72-201(b) through 12-72-202(g); it shall include operating manuals and photographs. The report shall set forth the tests performed in accordance with this standard and the results thereof.

(b) **Instructions and drawings.** A copy of the operating and installation instructions and any related drawings is to be furnished with the sample submitted for investigation to be used as a guide in the examination and test of the unit and for this purpose they need not be in final printed form.

The instructions and drawings shall include such directions and information as deemed by the manufacturer to be adequate for attaining proper and safe installation, operation and maintenance.

(c) **Rejection for cause.** Compliance with these standards will not necessarily mean approval and listing, if, when examined and tested, it is found to have other features which may impair the result intended by these regulations. Unusual constructions may require application of additional performance tests. The State Fire Marshal may refuse to approve any item for cause. (See the *California Electrical Code*.)

(d) **Devices covered.** This standard does not cover electrically operated single- or multiple-station fire alarm devices actuated by heat, smoke or combustion products.

(e) **Temperature classification.** The temperature sensitive elements of single- and multiple-station fire alarm devices are to be identified as to their temperature of operation as follows:

TEMPERATURE CLASSIFICATION	RATING RANGE, °F (°C)	MAXIMUM CEILING TEMPERATURE, °F (°C)
Ordinary	135-174 (57-79)	100 (38)
Intermediate	175-225 (79-107)	150 (66)

The maximum rating of a fire alarm device is to be not more than 225°F (107°C).

(f) **Differing constructions.** A control unit having materials or forms of construction differing from this standard may be investigated and tested according to the intent of this standard, and if found to be substantially equivalent may be given recognition for approval and listing. The office of the State Fire Marshal shall be consulted for general requirements and performance standards.

GENERAL

Sec. 12-72-202.

(a) **Construction.**

1. Unless otherwise indicated, the term “fire alarm device” as used in this standard refers to single- and multiple-station mechanically operated type fire alarm devices.

2. A fire alarm device shall be so constructed that it will be reliable and durable for the intended installation and use.

(b) **Mounting.**

1. A fire alarm device shall be provided with a means for mounting either to a ceiling or wall.

2. The means for mounting shall not result in any distortion of the fire alarm device so as to alter its operating characteristics.

(c) **Calibration.**

1. Any means for calibration or adjustment shall be guarded or sealed to prevent manipulation by hand or ordinary tools. A thermal responsive element adjustment, if provided as part of a unit, shall not be capable of being readjusted after shipment from the factory.

2. A calibration means considered to be not accessible or apparent is one not exposed to manipulation by tools, or one not readily replaceable. The complete concealment of tool-engagement means in a screw, such as a slot, recessed head, etc., by the use of solder or brazing material is considered adequate for the purpose of preventing manipulation or replacement.

(d) **Materials.**

1. A part shall be constructed of materials that are acceptable for the intended application and shall be of adequate mechanical strength.

2. Diaphragms and spring parts shall be made of nonferrous material, such as phosphor bronze, nickel, silver, etc., or of ferrous materials. If ferrous materials are employed, they shall be hermetically sealed or plated so as not to be affected adversely by corrosion.

3. A eutectic element, if used as the operating member of a fire alarm device, shall be constructed so as not to be affected adversely by conditions to which it is likely to be exposed in service, as represented by the tests described in Section 12-72-203.

4. All exposed parts likely to be affected adversely by corrosion shall be protected by enameling, galvanizing, sherardizing, plating or equivalent means.

(e) **Operating mechanisms.**

1. The moving parts of a fire alarm device shall have sufficient play at bearing surfaces to prevent binding.

2. The manually operated parts of a fire alarm device shall have sufficient strength to withstand the stresses to which they will be subjected in service.

3. A gear train driving spring shall be reliably anchored at each end. The spring winding means shall be provided with a positive stop to limit the winding or shall withstand the

maximum force likely to be applied without affecting the operation of the mechanism adversely.

(f) **Mechanical assembly.**

1. Any servicing or restoration operations intended to be made by the user shall be simple and capable of being accomplished with ordinary tools.

2. A device shall be so constructed that parts will not become displaced during or after installation.

3. An obstruction means, such as a wire mesh screen, shall be provided to prevent the entry of foreign bodies or materials into sounding devices which could prevent their operation.

(g) **Power supervisory feature.** A means shall be provided on a unit to automatically indicate that operating power is not available. The indication may be in the form of a flag, target, sight glass, change in mounting position of the fire alarm device or equivalent. A fire alarm device shall be capable of producing an alarm signal for not less than four minutes at the point where the loss of operating power is indicated initially. See Section 12-72-203 (l).

(h) **Operating gas.**

1. The operating gas employed in a fire alarm device shall be noncombustible and shall be of a degree of toxicity that will not produce death or serious injury to guinea pigs during a two hour exposure to the gas at a concentration of $2^1/_2$ percent by volume of air.

2. Refrigerants 12 and 22 are commonly used gases which comply with this requirement.

PERFORMANCE

Sec. 12-72-203.

(a) **General.**

1. Representative samples of units in commercial form shall be subjected to the following applicable tests.

2. If a device(s) is required to be mounted in a definite position in order to function properly, it shall be tested in that position.

3. If a device is normally intended to be connected to tubing to function, it shall be connected to the maximum length of tubing specified by the manufacturer unless the length of tubing would not have a bearing on its operation.

(b) **Determination of spacings.**

1. The sensitivity of a fire alarm device is to be expressed in terms of spacing limitations. Spacing limitations refer to the maximum distance permitted between devices mounted on smooth ceilings.

2. Installation spacing limitations of a fire alarm device are developed by an oven test (15-foot spacing only) or by a fire test. See Sections 12-72-203 (c) and (d).

3. Determination of spacings is obtained by the testing of ordinary degree ratings. Devices shall be sufficiently sensitive to qualify for at least a 15-foot spacing limitation.

4. An ordinary-degree rating, with a spacing of 15 feet, may be tested for sensitivity by being subjected to the oven test. See Section 12-72-203 (c), Item 1. If the device does not operate within two minutes, a fire test shall be conducted.

5. A fire alarm device is not acceptable if it fails to qualify for at least a 15-foot spacing, i.e., does not operate within two minutes in the oven test, and does not operate when subjected to the fire test.

(c) **Oven test.**

1. A fire alarm device shall operate in a normal and uniform manner when tested to the time-temperature curve illustrated in Figure 12-72-2-1. A sample shall be uniform in operation when mounted in the same position inside the oven. Operation is considered uniform if the device operates within a tolerance of 15°F (8.3°C) for an ordinary rated unit and 20°F (11°C) for an intermediate rated unit. A fire alarm device which operates within two minutes or less is suitable for a 15-foot spacing allocation.

2. The test apparatus consists of a full draft circulating air oven capable of producing the time-temperature curve illustrated in Figure 12-72-2-1. Air is to be moved past the sample at a velocity of 230 to 245 feet per minute. The temperature in the oven is recorded by means of a thermocouple and calibrated potentiometer.

3. The device under test is to be installed in the test oven with its temperature-sensitive element located in the air streams and positioned so that there is no obstruction of the moving air to the sensing element.

4. After installation in the oven, the device is to be subjected to the time-temperature conditions illustrated by Figure 12-72-2-1. The time of actuation is to be recorded at the instant the unit goes into alarm.

5. To determine that the performance of a fire alarm device is uniform, five samples are to be tested, using a different sample for each test, but each of the five samples is to be installed inside the chamber in the same position.

(d) **Fire test.**

1. A fire alarm device, installed at the intended spacing, shall operate prior to the 160°F (71.1°C) rated sprinklers installed on a 10-foot spacing schedule when both are simultaneously exposed to a control fire condition.

2. The test room is to be equipped with automatic sprinkler piping arranged to receive automatic sprinklers on a 10-by-10-foot spacing schedule. Sprinklers of the standard upright spray type are to be installed with the deflectors approximately 7 inches below the ceiling, which is normal for sprinkler piping installation. For each test, new automatic sprinklers of the same make and ratings are to be installed in the sprinkler piping. The devices under test are to be installed at their designated spacing, minimum 15 feet, in line with the sprinkler and fire test plan. See Figure 12-72-2-2 for layout.

3. This test is to be conducted in a room having a smooth ceiling with no physical obstructions between the fire source and devices under test and with minimum air movement. The room is to be provided for maintaining the room temperature ambient, if necessary. The heaters are to be shut off during a test trial.

4. The room shall be of sufficient cross-sectional area so that the devices under test are located in accordance with the spacing layout illustrated by Figure 12-72-2-2. The reflection of heated air is to be prevented from returning to the devices under test from adjacent wall surfaces during the course of the fire test. The room height shall be such that the vertical distance from the base of the fire to the ceiling is approximately 12 feet.

5. Fire tests are to be produced by burning denatured alcohol consisting of 190 proof ethanol to which 5 percent methanol has been added as a denaturant, in steel pans of a size necessary to produce a temperature rise sufficient to operate the automatic sprinklers in two minutes, ± 10 seconds, when installed on a 10-by-10-foot spacing schedule. Since temperature conditions in the test room may vary throughout the year, it is necessary to utilize different pan sizes in order to obtain the proper temperature-rise condition. This test condition develops a time-temperature curve similar to that shown in Figure 12-72-2-1.

6. The fire tests are to be conducted to compare the operating time of the fire alarm devices when installed at their recommended spacing schedule as compared with the operating time of automatic sprinklers installed on the standard 10-by-10-foot spacing schedule. Operation of the devices prior to the sprinkler will qualify the device for a spacing on which it is installed. Since automatic sprinklers vary in their sensitivity, the particular sprinkler utilized in these tests is to be one which has average operating response under uniform temperature-rise conditions.

7. Four units shall be subjected simultaneously to the fire test condition and all four units are required to respond prior to the sprinkler.

8. For units which may be mounted on a side wall, the device under test shall be mounted in a vertical position so that the distance between the top of the unit and the ceiling is 6 inches. The front of the units shall face the fire source and any surfaces on which the units are mounted shall be of a configuration to prevent reflection of heat onto the detector element.

9. If a fire alarm device is intended to be mounted on the ceiling, the unit shall be so installed for this test.

10. If a device is intended to be employed with an enclosure, such as used in mounting, it shall be subjected to the fire test using the enclosure representative of normal installation.

(e) **High-temperature exposure test.**

1. A fire alarm device shall not operate when subjected for 30 days to the test ambient temperature indicated in Table 12-72-2A. Following the exposure the response of the units shall not show a variation of more than 10 percent from the value obtained in the Oven Test on as-received samples. There shall be no change in the sound intensity when tested following the exposure. There shall be no evidence of eutectic flow as a result of this test.

2. Devices capable of repeated operation are to be subjected to the Oven Test before and after exposure to the test temperature ambient. Where devices are not capable of repeated operation the response data after exposure is to be compared to the response of identical as-received samples.

3. A fire alarm device shall withstand the high-temperature exposure without false operation and there shall be no visible deformation or change in the temperature sensitive element or any other part of the unit as a result of the test.

4. Five samples of each temperature rating are to be tested for their normal operating temperature after which they are to be placed in a circulating air oven maintained at the test temperature.

5. The units are to be removed from the oven after the 30 day period, allowed to remain at room temperature for at least 24 hours and then subjected to the oven test.

(f) **Corrosion tests.**

1. The response of a fire alarm device, after being subjected to corrosive atmospheres, shall not show a variation of more than 50 percent from the value obtained in the oven test on as-received samples. No false alarms shall occur during the exposure and there shall be no change in the sound intensity when the units are subjected to the oven test.

2. Devices capable of repeated operations are to be subjected to the oven test before and after exposure to the corrosive atmospheres. Where devices are not capable of repeated operation, the response data obtained from the oven test is to be compared to the response of identical as-received samples.

3. Two samples are to be exposed for 10 days to an atmosphere containing approximately 1 percent hydrogen sulfide by volume in air saturated with water vapor at room temperature.

4. Two samples are to be exposed for 10 days to an atmosphere containing approximately 1 percent sulphur dioxide in 1 percent carbon dioxide by volume in air saturated with water vapor at room temperature.

5. After exposure to the corrosive atmospheres, the samples are to be removed from the test chamber, allowed to remain in a normal atmosphere at room temperature for at least 24 hours and then subjected to the oven test.

6. This test is to be conducted only on devices of the ordinary degree rating unless there is reason to anticipate different behavior of other ratings.

(g) **Operating temperature test.**

1. A fire alarm device shall operate in a normal manner and within the operating temperature limits and tolerances included in Table 12-72-2B, when subjected to an operating temperature test in heated water, oil or air bath.

2. Five samples of each temperature rating are to be subjected to this test. Depending on their particular design, the devices are to be suspended in a circulating water, oil or air bath, and the temperature gradually increased at the rate of 1°F (0.6°C) per minute until operation takes place. The temperature of the bath at the instant of operation is to be recorded.

(h) **Vibration test.**

1. A fire alarm device shall be capable of withstanding vibration without false operation, without breakage or damage to parts or any leakage at fittings. Following the vibration test the response of a unit shall not show a variation of more than 50 percent from the value obtained in the oven test on as-received samples. There shall be no change in the sound intensity following the vibration.

2. Two samples are to be secured in the position of normal use on a mounting board and the board, in turn, securely fastened to a variable speed vibration machine having an amplitude of 0.01 inch. The frequency of vibration is to be varied from 10 to 35 cycles per second (cps) in increments of 5 cps until a resonant frequency is obtained. The samples are then to be vibrated at the maximum resonant frequency for a period of four hours. If no resonant frequency is obtained, the samples are to be vibrated at 35 cycles per second for a period of 120 hours.

3. For these tests, amplitude is defined as the maximum displacement of sinusoidal motion from a position of rest or one-half of the total table displacement. Resonance is defined as the maximum magnification of the applied vibration.

4. Devices capable of repeated operation are to be subjected to the oven test before and after the vibration test. Where devices are not capable of repeated operation, the response data obtained from the oven test is to be compared to the response of identical as-received samples.

5. This test is generally to be conducted only on devices of the ordinary degree rating unless there is a reason to anticipate different behavior of other ratings. For multiple station fire alarm devices, the units shall be interconnected with a 10-foot length of tubing between units and between the units and any sounding appliance with which it is intended to be employed.

(i) **Humidity test.**

1. A fire alarm device shall be capable of operating in a normal manner and comply with the requirements of the oven test following exposure for 24 hours to moist air having a relative humidity of 85 ± 5 percent at a temperature of 30 ± 2°C (86 ± 3.6°F). The units shall be tested within five minutes after removal from the humid environment.

2. Two samples are to be subjected to this test. This test is to be conducted on devices having an ordinary degree rating only, unless different behavior of other ratings is anticipated.

(j) **Low-temperature exposure test.**

1. A fire alarm device shall be capable of operating in a normal manner and comply with the requirements of the oven test following exposure for 24 hours to a temperature of minus 30 ± 2°C (minus 34.4 ± 3.6°F). The units shall be tested within five minutes after removal from the low temperature chamber. There shall be no false operation, damage to parts or leakage at fittings.

2. Two samples are to be subjected to this test. This test is to be conducted on devices having an ordinary degree rating only, unless different behavior of other ratings is anticipated.

3. For a multiple station fire alarm device the maximum length of tubing specified by the manufacturer [see Section 12-72-203 (a), Item 2] is to be connected between the unit and any alarm sounding device with which it is intended to be used prior to conducting the test.

(k) **Endurance test.**

1. There shall be no mechanical failure of a spring wound-type fire alarm device and the unit shall be capable of operating in a normal manner and comply with the requirements of the oven test following 100 cycles of operation at a rate of not less than once per hour.

2. Two samples of any rating shall be subjected to this test. Each cycle shall consist of a complete rundown and rewinding operation. Following the 100 cycles, the units shall be subjected to the oven test.

(l) **Audibility test.**

1. The audible alarm generated by a fire alarm device shall be distinctive in sound from other customary sounds, continue for at least four full minutes at full intensity and be not less than 83 decibels when measured in an ambient temperature of 23 ± 3°C (73 ± 5.4°F) with a relative humidity of 60 ± 20 percent and a barometric pressure of approximately 700 mm mercury.

2. The measurement of sound level is to be made with a sound level meter employing the C weighting network and fast response characteristics. The measurement is to be made in a room having the approximate dimensions of 20- by 10- by 10-feet high or

larger with sound absorbing panels on walls and ceiling having a Noise Reduction Coefficient (NRC) of 0.95 or higher for the walls and 0.64 or higher for the ceiling. The ambient noise level shall be not greater than 55 decibels. The device is to be mounted in a position of normal use, approximately 5 feet above the floor in the center of the room. The microphone is to be located at a 10-foot distance from the device and in a position to receive the maximum sound level produced by the device.

3. Alternately, the measurement may be made in a free field condition to minimize the effect of reflected sound energy. The ambient noise level is to be at least 10 decibels below the measured level produced by the signal device. Free field conditions may be simulated by mounting the device not less than 10 feet from the ground and with the microphone located 10 feet from the device and conducting the test outdoors on a clear day with a wind velocity of not more than 5 miles per hour and an ambient temperature of 15–25°C (50–77°F).

4. Alternatively, an anechoic chamber of not less than 1,000 cubic feet, with no dimension less than 7 feet, and with an absorption factor of 0.99 or greater from 100 Hertz (Hz) to 10 kiloHertz (kHz) for all surfaces may be used for this measurement.

(m) **Hydrostatic strength test.**

1. The storage cylinder of a gas operated-type detector shall be capable of withstanding, without failure, an internal hydrostatic pressure of five times the pressure of the stored gas at the operating temperature of the device.

2. In conducting the hydrostatic strength test, the storage cylinder is to be tested to the specified pressure after the shell has been completely filled with water or oil. Care should be exercised to expel all air from the test specimen before the pressure is applied.

3. The apparatus for this test is to consist of a hand- or motor-operated hydraulic pump capable of producing the required test pressure, a substantial test cage capable of containing the shell and its parts in the event of failure, the necessary valves and fittings for attachment to the test sample, a calibrated pressure gage graduated in at least 20 pounds per square inch (psi) increments to at least 200 psi more than the test pressure, and the necessary valves, fittings, etc., for regulating and maintaining the specified test pressure.

4. The pressure should be increased at a rate of approximately 300 psi per minute until the test pressure is obtained. The ultimate test pressure is to be held for one minute.

5. Five cylinders are to be subjected to this test. None of the cylinders shall rupture or show evidence of leakage. Deformation of a cylinder is not considered a failure.

INSTRUCTIONS

Sec. 12-72-204.

(a) **General.** Each fire alarm device shall be provided with the following installation, operating and maintenance instructions:

1. Typical installation layout for the unit(s) indicating recommended locations.

2. Description of the operation, testing (if provided), and proper maintenance procedures of the unit(s).

3. Information on establishing a household emergency evacuation plan in the event of a fire.

4. An indication that the local fire authority shall be notified of the installation.

(b) The instructions may be incorporated on the outside of the unit, on a separate sheet, or as part of a manual. If not included directly on the device, the instructions or manual shall be referenced in the marking information on the unit.

MARKING

Sec. 12-72-205.

(a) **General.** A fire alarm device shall be clearly and permanently marked where it will be visible after installation with the following information. Removal of a unit from an installed position by removing not more than one screw to view the marking is considered as meeting the requirement regarding visibility after installation.

1. Name or identifying symbol of manufacturer or vendor.

2. Model number or equivalent.

3. Temperature rating of the fire alarm device.

4. Reference to the State Fire Marshal Regulations for Household Fire Warning Equipment.

5. The statement: “Do Not Paint” or equivalent to prevent painting of the temperature sensitive element and the markings. The letters shall be a minimum of $^{1}/_{8}$ inch in height.

6. The following information is required on gas operated units. The letters shall be a minimum of $^{1}/_{8}$ inch in height.

CAUTION—Pressurized Container—Do Not Puncture or Incinerate—Explosion Hazard May Result

7. The following or equivalent wording: Operation—Responds To A Heat Producing Fire Only. Unit Will Actuate When The Temperature Of The Surrounding Air Reaches

The Marked Temperature Rating (Plus Or Minus A Few Degrees) Provided The Air Temperature Increase Is 1°F (0.56°C) Per Minute Or Less. At Faster Rates Of Temperature Rise, The Surrounding Air Temperature At Which The Unit Will Actuate Will Be Above The Marked Rating, The Temperature Differential Depending On The Rate Of Rise Of Temperature Produced By A Fire. This Temperature Differential Results From the Time Lag Before The Temperature Element Absorbs The Necessary Heat From the Surrrounding Air to Actuate.

8. Instructions for setting or rewinding of a spring wound fire alarm device to be included on the device.

9. For gas-operated fire alarm devices information to return the unit to the factory for servicing shall be provided.

10. State Fire Marshal listing file number if required by Article 1.5.

(b) If a manufacturer has more than one temperature rating for an alarm device, where the thermally sensitive element is renewable and must be replaced after operation, the renewable element shall bear the manufacturer's name or equivalent identification and the temperature rating.

(c) If a manufacturer produces units at more than one factory, each unit shall have a distinctive marking to identify it as the product of a particular factory.

TESTING OVEN

Sec. 12-72-206.

(a) **General.** The testing oven shall be constructed and operated in accordance with this section and the following:

1. A typical test oven consists of an oval shaped stainless steel box approximately 31 by 10 by 16 inches high, made of No. 11 M.S.G. material. One of the curved end sections is hinged. See Figure 12-72-2-3.

2. A section 6 by 6 inches at the top is fitted with a removable wooden cover.

3. Two glass windows, 4 by 6 inches in size, are provided in the sides of the oven for observation of the samples under test.

4. The interior of the oven is divided horizontally by a baffle over the heater chamber located in the central lower section. One end of the horizontal baffle is joined to a guide vane extending upward at an angle of 72 degrees into the oven chamber. The vane directs the air currents to ensure greater uniformity of temperature in the oven.

5. Eight 1,000-watt heating elements, threaded into screw shell lampholders, furnish the heat. They are so connected that six of the heating elements are controlled by means of two manually adjusted autotransformers. An auxiliary switch controls the other two heating elements for supplying additional heat when necessary.

6. An air current through the bank of heaters is created by means of a four blade five-inch diameter fan located behind the heating elements and connected to a shaft which extends to the outside of the oven. A variable speed motor is mounted on a bracket inside the lower cabinet and operates the fan through a pulley and belt arrangement. The speed of the motor is adjusted and the pitch of the fan blade is such that the velocity of the air current is 230-245 feet per minute over the sample under test.

7. Temperatures are measured by means of two No. 30 AWG wire thermocouples inserted through copper tubes extending to the inside of the test chamber and are located adjacent to the device under test and in the heating chamber. The air velocity is measured by a velometer installed in the oven.

8. A control board is mounted on the cabinet adjacent to the testing oven. The control board incorporates five toggle switches and four indicating lights for operating the heating elements, air flow fan and a cooling fan. A toggle switch is used for turning on the temperature recorder and another is used for checking the temperatures in either the upper or lower portion of the oven.

9. Two manually adjusted autotransformers are mounted on the control panel for controlling the heat developed by the heating coils. An air flow indicator gage is incorporated on the control board for continuous indication of the air flow during the test run. In the event that the air flow tends to change during a test run, the speed of the fan is adjusted to keep the air velocity within the specified range.

(b) **Test method.**

1. The preparation for test consists of mounting the device on the small removable screen base of $^{1}/_{4}$-inch hardware cloth formed to a height where the temperature sensing element is midway between the top of the chamber and the guide vane. The sample under test is positioned in the air stream so that there is no obstruction between the guide vane and sensing element. A spring wound device is mounted with the sensing element in a horizontal position. The test sample shall remain in the oven at least five minutes prior to starting each test run.

2. The heating coils are permitted to preheat for 10-20 seconds prior to starting the test. The fan controlling the air flow is turned on and its speed adjusted to produce the required velocity. The temperatures are read every 10 seconds. The two autotransformers are adjusted as needed to obtain the desired rate of temperature rise. Normal oven temperatures at the start of the test are to be 85–90°F (29.4–32.2°C).

3. Upon operation of the device, the current applied to the bank of heaters is cut-off and the oven is cooled to normal room temperature by means of the cooling fan.

TABLE 12-72-2A—TEMPERATURE CLASSIFICATIONS

TEMPERATURE CLASSIFICATION	RATING RANGE °F (°C)	TEST TEMPERATURE °F (°C)
Ordinary	135-174 (57-74)	125 (51.7)
Intermediate	175-225 (79-107)	150 (66)

TABLE 12-72-2B—TEST TEMPERATURES

TEMPERATURE CLASSIFICATION	OPERATING TEMPERATURE LIMITS	OPERATION	
	Minimum °F (°C)	Maximum °F (°C)	Tolerance, °F (°C)
Ordinary	128 (53.3)	165 (73.9)	10 (5.6)
Intermediate	166 (74.4)	225 (107)	15 (8.3)

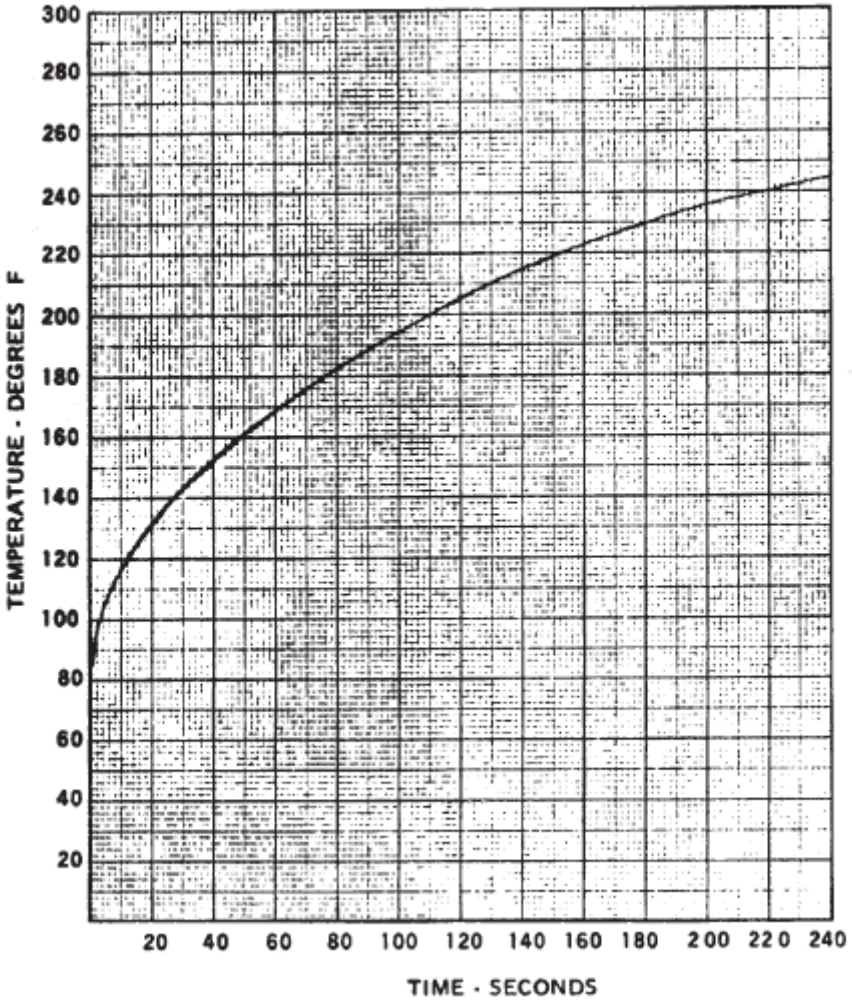

FIGURE 12-72-2-1—TIME-TEMPERATURE CURVE—15-FOOT SPACINGS

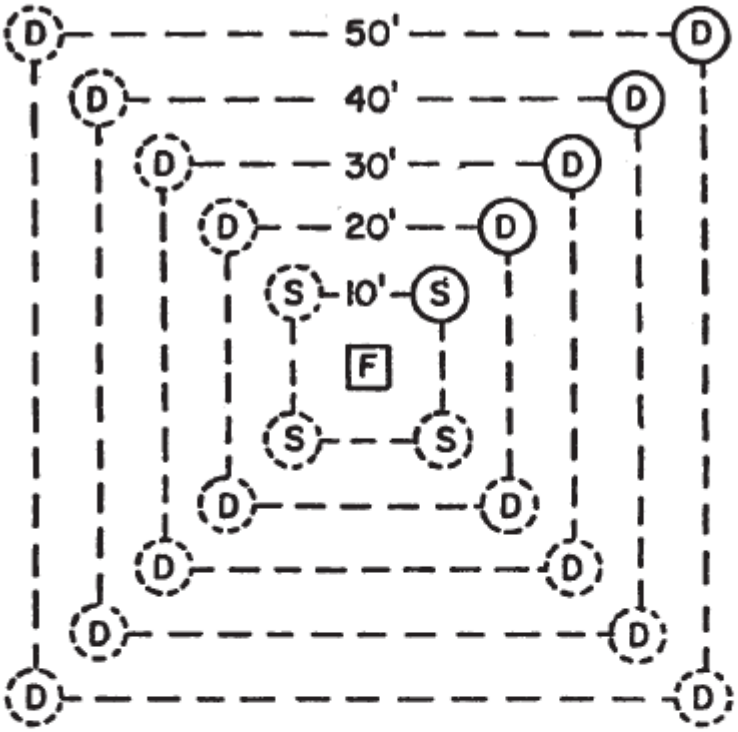

Legend:

F — TEST FIRE, DENATURED ALCOHOL, 190-PROOF. PAN LOCATED APPROXIMATELY 3 FEET ABOVE FLOOR.

S — INDICATES NORMAL SPRINKLER SPACINGS ON 10-FOOT SCHEDULES.

S — SPRINKLER INSTALLED DURING FIRE TEST. RATED 160° F (71.1° C), STANDARD UPRIGHT SPRAY TYPE. DEFLECTORS APPROXIMATELY 7 INCHES BELOW CEILING.

D — INDICATES NORMAL FIRE ALARM DEVICE SPACING ON VARIOUS SPACING SCHEDULES.

D — FIRE ALARM DEVICE UNDER TEST. EMPLOYED TO DETERMINE MAXIMUM ALLOWABLE SPACING.

FIGURE 12-72-2-2—FIRE-TEST LAYOUT

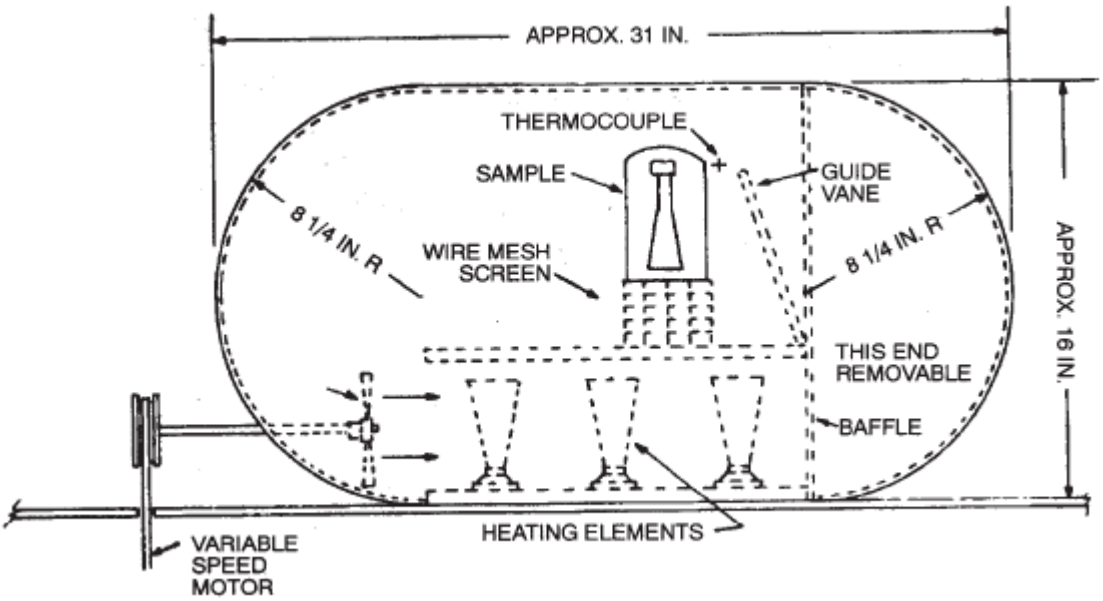

FIGURE 12-72-2-3—TEST OVEN

CHAPTER 12-72-3
PROTECTIVE SIGNALING SYSTEMS

SMOKE DETECTORS, COMBUSTION PRODUCTS TYPE
STANDARD 12-72-3

STATE FIRE MARSHAL

SCOPE

Sec. 12-72-300.

(a) **Basic.** This standard represents the minimum basic requirements for the construction and performance of combustion products detectors of other than the photoelectric type to be employed in ordinary indoor locations and to be listed under this classification. The minimum design, construction and performance standards set forth herein are those deemed as minimum necessary to establish conformance to the regulations of the State Fire Marshal.

(b) **Definitions.** For the purpose of this standard, the following definitions shall apply:

1. **Alarm signal.** A signal intended to indicate an emergency fire condition.

2. **Annunciator.** Integrally mounted or remotely connected visual indicating device intended to indicate an alarm or trouble condition.

3. **Ionization type detector.** A device in which the presence of small combustion practices, often invisible to the eye, interfere with the normal ionization current resulting from radiation produced by a radioactive source in the detection chamber. A second chamber, employing a similar ionization source, may also be used to compensate for normal environmental ambient changes.

4. **Ionization-resistance bridge type detector.** Employs both ionization and resistance bridge principles in one unit. Additive response from both detector elements is required for detector operation.

5. **Resistance-bridge type detector.** Responds to an abnormal rate of increase of combustion products which change the impedance of second similar plate may be employed to compensate for normal ambient changes.

6. **Sensitivity.** Relative degree of response of a detector. A high sensitivity denotes response to a lower concentration of combustion than a low sensitivity under identical fire test conditions.

7. **Trouble signal.** A visual or audible signal intended to indicate a fault or trouble condition, such as an open or ground fault, occurring in the device or connected wiring.

8. **Voltage classification.**

   A. **Low voltage.** A circuit classified as low voltage is one involving a potential of not more than 30 volts alternating current (42.4 peak) or direct current, and supplied from a circuit whose power is limited to a maximum of 100 volt amperes.

   B. **High voltage.** A circuit classified as high voltage is one having circuit characteristics in excess of those of a low-voltage circuit.

TEST REPORTS

Sec. 12-72-301.

(a) The report shall include engineering data, and an analysis comparing the design against Sections 12-72-302 (a) through 12-72-302 (t); it shall include wiring diagrams, operating manuals and photographs; it shall set forth the tests performed in accordance with this standard and the results thereof and shall verify the correctness of the electrical rating.

(b) **Listed components.** Electrical wiring, material, devices, combination of devices, fittings, appliances and equipment which have been tested and listed by an approved listing agency for the intended purpose and use need not be individually retested.

The report shall include the catalog number or other readily identifiable marking; the name of the approved listing agency, the laboratory test report number and date. Such individually tested and listed component parts and devices shall be subjected to the performance standard tests to determine its suitability for use in combination with other component parts, devices, circuits or equipment.

(c) **Listed detectors.** Detectors which have been tested to any other acceptable test standard may be evaluated provided such test incorporates all features of this standard.

(d) **Rejection for cause.** Compliance with these standards will not necessarily mean approval and listing, if when examined and tested, it is found to have other features which may impair the result intended by these regulations. Unusual constructions may require application of additional performance tests. The State Fire Marshal may refuse to approve any item for cause. (See the *California Electrical Code*.)

(e) **Smoke detectors only.**

1. A combustion products detector, as covered by these requirements consists of an assembly of electrical components arranged to detect one or more products of combustion. The products of combustion may consist of but are not necessarily limited to gaseous combustion products, water vapor and visible as well as invisible smoke particles. The detector includes provision for the connection to a source of power, signaling and optional remote control circuits.

2. These requirements cover the following types of detectors:

   A. Detectors intended for open area protection, intended for connection to a compatible power supply or control unit for operation as part of a fire alarm system.

B. Detectors intended solely for control of releasing devices such as electromagnetic door holders, fire dampers, etc.

C. Detectors suitable for Items A and B above.

3. This standard does not cover the following:

A. Detectors for monitoring the smoke density within flues or stacks.

B. Duct detectors.

C. Power supplies and control units to which the detectors are intended to be connected. These are covered under the Standard Test Procedures for Protective Signaling Systems, SFM 12-72-1.

D. Smoke detectors of the photoelectric type which are covered by the Standard for Smoke Detectors, Photoelectric Type, for Fire-Protective Signaling Systems, UL 168.

4. The manufacture, importation, distribution and disposal of smoke detectors containing radioactive material are subject to the safety requirements of state radiation control agencies and/or the U.S. Atomic Energy Commission.

5. Verification of an acceptable evaluation by the regulating agency involved is required prior to the investigation of the smoke detector to ensure compliance with this standard.

(f) **Differing constructions.** A detector having materials or forms of construction differing from this standard may be investigated and tested according to the intent of this standard, and if found to be substantially equivalent may be given recognition for approval and listing. The office of the State Fire Marshal shall be consulted for general requirements and performance standards.

(g) **Operating and installation instructions.**

1. A copy of the operating and installation instructions and related schematic wiring diagrams and installation drawings are to be furnished with the sample submitted for investigation to be used as a guide in the examination and test of the detector and for this purpose need not be in final printed form. The information may be included in a manual or technical bulletin.

2. The instructions and drawings should include such directions and information as deemed by the manufacturer to be adequate for attaining proper and safe installation, maintenance and operation of the detector. See Section 12-72-302 (b).

GENERAL

12-72-302.

(a) **Construction.**

1. A detector shall be so constructed that it will be reliable and sufficiently durable for its intended installation and use.

2. A component of a detector shall comply with the requirements for that component, except that such requirements may be modified if appropriate for the particular application.

3. Except where specifically indicated otherwise, the construction requirements specified for a detector shall also apply for any remote accessories with which it is to be employed.

4. Each detector is to be provided with a means for monitoring the relative sensitivity of the unit after it has been installed.

5. The monitoring means may be by means of a jack or terminals for connection of a meter, or by a visual means which would be visible with the unit installed, or equivalent.

6. The use of a plug-in type detector assembly, which may be removed readily for insertion of an adapter connected to metering equipment, would be acceptable.

(b) **Marking.**

1. A detector shall be permanently marked with the following information, except where it is indicated that the information may appear on an installation wiring diagram.

   A. Name or identifying symbol of the manufacturer or vendor.

   B. Model number or equivalent and serial number or equivalent.

   C. Electrical rating, in volts, amperes or watts, and frequency for each circuit. May appear on the installation wiring diagram.

   D. Sensitivity setting and reference to the region of sensitivity such as maximum, nominal or intermediate or minimum. If a detector is intended to be adjusted in the field, the range of sensitivity is to be indicated. The sensitivity shall be indicated as an instrument reading. A sensitivity indication other than an instrument reading may be employed if it provides an equivalent indication of the sensitivity of the detector. May appear on the installation wiring diagram.

   E. Correct mounting position if a unit is intended to be mounted in a definite position. This information may appear on the installation wiring diagram.

   F. Identification of lights, switches, meters, etc., regarding their function, unless their operation is obvious.

   G. Maximum rating of fuse in each fuseholder. Located adjacent to the fuseholder.

H. Reference to an installation wiring diagram, if not attached to the detector, by drawing number and issue number of date.

I. For a detector which employs a radioactive material, the following information shall be indicated directly on the unit: type, amount, radiation symbol (optional), safe disposal and a caution notice which shall read as follows:

CAUTION—Contains Radioactive Material, or its equivalent wording.

J. A reference to the Technical Bulletin. May appear on the installation wiring diagram.

K. Reference to a specific model number or description of the instrument to be used for checking the sensitivity of the detector. May appear on the installation wiring diagram.

L. A detector intended for permanent connection only to a wiring system other than metal-clad cable or conduit shall be marked to indicate the system or systems for which it is suitable. The marking shall be so located that it will be visible when power-supply connections to the detector are made or may appear on the installation wiring diagram.

M. The State Fire Marshal's listing label if required by Article 1.5.

N. A detector which is not intended to be painted in the field shall be marked on the outside "DO NOT PAINT."

2. An installation wiring diagram shall be provided with each detector illustrating the field connections to be made. The drawing may be attached to the unit or, if separate, shall be referenced in the marking attached to the unit with the drawing number and issue number and/or date.

3. The drawing shall show a pictorial view of the installation terminals or leads to which field connections are made as they would appear when viewed during an installation and the minimum internal dimensions of a back box, if not provided with the detector, shall be specified. The terminal numbers on the detector shall agree with the numbers on the drawing. A drawing not attached to the detector unit shall be marked with the name or identifying symbol of the manufacturer's or vendor's drawing number, and an issue number and/or date.

4. The following marking information is required to appear on the detector or the installation wiring diagram for the applicable circuits to which field connections are made. Where an electrical rating is indicated, it may be omitted if reference is made for connection to a specific control unit or equivalent.

A. **Supply circuit.** Voltage, current or watts, and frequency.

B. **Initiating device circuit connections.** For detectors intended to be connected only to the initiating device circuit of a fire alarm system control unit, at least two

detectors shall be shown connected to a typical initiating device circuit. For a detector intended only for releasing device service, a typical connection shall be shown. For a detector suitable for both application, typical connections representing both types of connections shall be illustrated.

C. **Supplementary circuits.** Voltage, current or watts, and frequency rating.

5. **Technical bulletin.** A technical bulletin shall be provided by the manufacturer for each installation to be used as a reference by the installer. The bulletin shall include the manufacturer's recommendations regarding typical detector locations. The information shall include guidelines on detector location, spacings, maintenance, servicing tests, etc., under various environmental conditions and physical configurations. Some conditions for which guidelines are required are:

   A. Temperature

   B. Humidity

   C. Corrosive atmospheres

   D. Air movement (ventilating and air-conditioning systems)

   E. High ceilings

   F. Sloped ceilings

   G. Girder ceiling construction

   H. Small and large bays

   I. Open joist construction

   J. High stock piling

   K. Conditions produced by manufacturing processes

6. Detailed information shall be provided regarding the use of the facilities provided on the detector to monitor the sensitivity. Typical information that shall be provided includes:

   A. Nominal reading under clear condition

   B. Nominal reading when close to alarm

   C. Nominal reading at alarm condition

   D. Guidelines on instrument use for an engineering survey, installation and maintenance

7. Information regarding locations where not to install detectors shall also be provided to minimize the possibility of false alarms.

8. Reference to the bulletin number and date is required either on the detector nameplate marking or on the installation drawing. If the installation drawing is included as part of the technical bulletin, reference to the bulletin is required to be indicated on the detector.

(c) **Frame, enclosure and metalware.**

1. A detector enclosure shall be so formed and assembled that it has the strength and rigidity necessary to resist the abuses to which it is likely to be subjected in service without adversely affecting its performance and without introducing a fire, shock, or accident hazard due to total or partial collapse with resulting reduction of spacings, loosening or displacement of parts or other defects.

2. Except as noted, all electrical parts of a detector shall be enclosed to provide protection against contact with uninsulated live parts. A separate enclosure for field wiring terminals that will be enclosed by a back box is not required.

3. A detector shall have a suitable means for mounting, which shall be accessible without disassembling any operating part of the unit. Removal of a completely assembled panel or equivalent to mount the detector is not considered to be disassembly of an operating part.

4. An assembled part intended to be removed during installation shall be protected against damage from handling.

5. An enclosure shall have provision for the connection of metal-clad cable or conduit. An enclosure without provision for the connection of metal-clad cable or conduit may be acceptable if there are furnished with it definite instructions indicating the sections of the unit which are intended to be drilled in the field for the connection of raceways, or if the unit is intended for mounting on an outlet box.

6. The thickness of cast metal for an enclosure shall be as indicated in Table 12-72-3A. Except that cast metal having a thickness $^{1}/_{32}$ inch less than that indicated in the table may be employed if the surface under consideration is curved, ribbed or otherwise reinforced, or if the shape and/or size of the surface is such that equivalent mechanical strength is provided.

7. If threads for the connection of conduit are tapped all the way through a hole in an enclosure wall, or if an equivalent construction is employed, there shall be not less than three and one-half nor more than five threads in the metal, and the construction shall be such that a standard conduit bushing can be properly attached.

8. If threads for the connection of conduit are tapped only part of the way through a hole in an enclosure wall, there shall be not less than three and one-half full threads in the metal, and there shall be a smooth, rounded inlet hole for the conductors which shall

afford protection to the conductors equivalent to that provided by a standard conduit bushing.

9. **Sheet metal enclosures.** The thickness of sheet metal employed for the enclosure of a detector shall be not less than that indicated in Table 12-72-3B, except that sheet metal of two gauge sizes lesser thickness may be employed if the surface under consideration is curved, ribbed or otherwise reinforced, or if the shape and/or size of the surface is such that equivalent mechanical strength is provided.

10. At any point where conduit or metal-clad cable is to be attached, sheet metal shall be of such thickness or shall be so formed or reinforced that it will have a stiffness at least equivalent to that of an uncoated flat sheet steel having a minimum thickness of 0.053 inch (No. 16 MSG).

11. A plate or plug closure for an unused conduit opening or other hole in the enclosure shall have a thickness not less than:

    A. 0.014 inch for steel or 0.019 inch for nonferrous metal for a hole having a $^{1}/_{4}$-inch maximum dimension.

    B. 0.027-inch steel or 0.032-inch nonferrous metal for a hole having a $1^{3}/_{8}$-inch maximum dimension.

12. A closure for a hole larger than $1^{3}/_{8}$-inch diameter shall have a thickness equal to that required for the enclosure of the device or a standard knockout seal shall be used. Such plates or plugs shall be securely mounted.

13. A knockout in a sheet metal enclosure shall be reliably secured but shall be capable of being removed without undue deformation of the enclosure.

14. A knockout shall be provided with a surrounding surface adequate for proper seating of a conduit bushing, and shall be so located that installation of a bushing at any knockout likely to be used during installation will not result in spacings between uninsulated live parts and the bushing of less than those indicated under spacings.

    The figures in parentheses are the galvanized sheet gage numbers (GSG) (for zinc-coated steel), the manufacturers' standard gage numbers (MSG) (for uncoated steel), and the American wire gage numbers (AWG) (for a nonferrous metal) which provide the required minimum thickness of metal.

15. An enclosure or parts of an enclosure of nonmetallic material shall have the mechanical strength and durability and be so formed that parts will be protected against damage. The mechanical strength of an enclosure shall be at least equivalent to a sheet metal enclosure of the minimum thickness specified in Table 12-72-3B. See Section 12-72-205 for performance tests on plastic materials and enclosures.

16. (No requirements.)

17. The continuity of the grounding system shall not rely on the dimensional integrity of the nonmetallic material.

18. Ventilating openings in an enclosure, including perforated holes, louvers and openings protected by means of wire screening, expanded metal or perforated covers, shall be of such size or shape that no opening will permit passage of a rod having a diameter of $^{33}/_{64}$ inch. An enclosure for fuses or other overload protective device and provided with ventilating openings shall afford adequate protection against the emission of flame or molten metal. The opening shall be designed to permit cleaning without damage to functional enclosed parts.

19. Except as noted in the following paragraph, perforated sheet metal and sheet metal employed for expanded metal mesh shall be not less than 0.042 inch in average thickness, 0.046 inch if zinc coated.

20. If the indentation of a guard or enclosure will not alter the clearance between uninsulated live parts and dead metal parts so as to affect performance adversely or reduce spacings below the minimum values given under spacings, 0.021 inch expanded metal mesh (0.024 inch if zinc coated) may be employed, provided that (1) the exposed mesh on any one side or surface of the device so protected has an area of not more than 72 square inches and has no dimension greater than 12 inches, or (2) the width of an opening so protected is not greater than $3^{1}/_{2}$ inches.

21. The wires forming a screen protecting current carrying parts shall be not smaller than No. 16 AWG and the screen openings shall be not greater than $^{1}/_{2}$ square inch in area.

22. An enclosure cover shall be hinged, sliding, pivoted or similarly attached if (1) it provides ready access to fuses or any other overcurrent protective device the normal functioning of which requires renewal, or (2) it is necessary to open the cover in connection with the normal operation of the unit.

23. With reference to the requirement of Item 22, normal operation is considered to be operation of a switch for testing or for silencing an audible signal appliance or operation of any other component of a unit which requires such action in connection with its intended performance.

24. A hinged cover is not required where the only fuse(s) enclosed is intended to provide protection to portions of internal circuits, such as may be employed on a separate printed wiring board or circuit subassembly, to prevent excessive circuit damage resulting from a fault. The use of such a fuse(s) is acceptable if the following or equivalent marking is indicated on the cover of units employing high voltage circuits: Circuit Fuse(s) Inside—Disconnect Power Prior to Servicing.

25. A hinged cover shall be provided with a latch, screw or catch to hold it closed. An unhinged cover shall be securely held in place by screws or the equivalent.

26. Glass covering an observation opening shall be held securely in place so that it cannot be readily displaced in service and shall provide adequate mechanical protection of the enclosed parts. The thickness of a glass cover shall be not less than that indicated in Table 12-72-3C.

27. A glass panel for an opening having an area of more than 144 square inches or having any dimension greater than 12 inches, shall be supported by a continuous groove not less than $^{3}/_{16}$ inch deep along all four edges of the panel.

28. A transparent material other than glass employed as a cover over an opening in an enclosure shall have mechanical strength equivalent to that of glass, not become a fire hazard or distort, or not become less transparent at the temperature to which it may be subjected under normal or abnormal service conditions.

(d) **Protection against corrosion.**

1. Except as indicated herein, iron and steel parts shall be suitably protected against corrosion by enameling, galvanizing, sheradizing, plating or other equivalent means.

2. These requirements apply to all enclosures whether of sheet steel or cast iron, and to all springs and other parts upon which proper mechanical operation may depend. It does not apply to minor parts such as washers, screws, bolts and the like, if the failure of such unprotected parts would not be liable to result in a hazardous condition or adversely affect the operation of the unit. Parts made of stainless steel (properly polished or treated if necessary) do not require additional protection against corrosion. Bearing surfaces should be of such materials and design as to ensure against binding due to corrosion.

(e) **Insulating materials.**

1. Material for the mounting of current-carrying parts shall be porcelain, phenolic composition, cold-molded composition or material which is suitable for the particular application.

2. Vulcanized fiber may be used for insulating bushings, washers, separators and barriers, but not as the sole support for uninsulated current-carrying parts of other than low-voltage circuits. Plastic materials may be used for the sole support of uninsulated live parts, if found to have adequate mechanical strength and rigidity, dielectric withstand, resistance to heat, flame propagation, arcing, creep and moisture, and other properties suitable for the application, without displaying a loss of these properties beyond the minimum acceptable level as a result of aging.

3. Metal parts as described below need not comply with the requirement of Section 12-72-302 (d), Item 2.

   A. Adhesive attached metal foil markings, screws, handles, etc., which are located on the outside of the detector enclosure and isolated from electrical components or wiring by grounded metal parts so that they are not liable to become energized.

4. A terminal block mounted on a metal surface which may be grounded shall be provided with an insulating barrier between the mounting surface and all live parts on the underside of the base which are not staked, upset, sealed or equivalently prevented from loosening so as to prevent such parts and the ends of replaceable terminal screws from coming in contact with the supporting surface.

5. A countersunk part shall be covered with a waterproof insulating compound which will not melt at a temperature 15°C (27°F) higher than the maximum normal operating temperature of the assembly, and at not less than 65°C (149°F) in any case. The depth or thickness of sealing compound shall be not less than $^{1}/_{8}$ inch.

(f) **Mounting parts.**

1. All parts of a detector shall be securely mounted in position and prevented from loosening or turning if such motion may affect adversely the normal performance of the unit, or may affect the fire and accident hazard incident to the operation of the detector.

2. A switch, lampholder, attachment-plug receptacle, plug connector or similar electrical component, shall be mounted securely and, except as noted in Items 3 and 4, shall be prevented from turning.

3. The requirement that a switch be prevented from turning may be waived if all four of the following conditions are met:

   A. The switch is to be of a plunger or other type that does not tend to rotate when operated. A toggle switch is considered to be subject to forces that tend to turn the switch during normal operation of the switch.

   B. Isolated metal parts, such as small assembly screws, etc., which are positively separated from wiring and uninsulated live parts.

   C. Panels and covers which do not enclose uninsulated live parts if wiring is positively separated from the panel or cover so that it is not liable to become energized.

   D. Panels and covers which are insulated from electrical components and wiring by an insulating barrier of vulcanized fiber, varnished cloth, phenolic composition or similar material not less than $^{1}/_{32}$-inch thick and reliably secured in place.

4. A bonding conductor shall be of material suitable for use as an electrical conductor. If of ferrous metal, it shall be protected against corrosion by painting, plating or the equivalent. The conductor shall be not smaller than the maximum size wire employed in the circuit wiring of the component or part. A separate bonding conductor or strap shall be installed in such a manner that it is protected from mechanical damage.

5. The bonding shall be by a positive means, such as by clamping, riveting, bolted or screwed connection, brazing, or welding. The bonding connection shall reliably

penetrate nonconductive coatings such as paint. Bonding around a resilient mount shall not depend on the clamping action of rubber or similar material.

6. A bolted or screwed connection that incorporates a star washer under the screw head, is considered acceptable for penetrating nonconductive coatings.

7. Where the bonding means depends upon screw threads, two or more screws or two fall threads of a single screw engaging metal is considered acceptable.

8. Metal-to-metal hinge-bearing members for doors or covers may be considered as a means for bonding the door or cover for grounding providing a multiple-bearing, pin-type hinge is employed.

9. Splices shall not be employed in conductors used to bond electrical enclosures or components.

(g) **Deleted.**

(h) **Motors.**

1. All motors shall be protected by thermal or by overcurrent protective devices, or a combination thereof.

2. A motor employing thermal protection which complies with the Standard for Thermal Protectors for Motors, UL 547, is considered to comply with the requirement of Item 1.

3. Motors, such as direct-drive fan motors, which are not normally subjected to overloads, and which are determined to be adequately protected against overheating due to locked-rotor current by a thermal or overcurrent protective device may be accepted under this requirement, provided it is determined that the motor will not overheat under the performance requirements of this standard.

4. Impedance protection may be accepted for motors which are determined to be adequately protected against overheating due to locked-rotor current, provided it is determined that the motor will not overheat under the performance requirements of this standard.

(i) **Current-carrying parts.**

1. A current-carrying part shall have adequate mechanical strength and current carrying capacity for the service, and shall be a metal such as silver, copper or copper alloy, or other material which will provide equivalent performance.

2. Bearings, hinges, etc., are not acceptable for carrying current between interrelated fixed and moving parts.

3. The insulation of coil windings of relays, transformers, etc., shall be such as to resist the absorption of moisture.

4. Enameled wire is not required to be given additional treatment to prevent moisture absorption.

(j) **Supply connections.** A detector shall be provided with wiring terminals or leads for the connection of conductors of at least the size required by the *California Electrical Code*, corresponding to the rating of the unit.

(k) **Terminal connections and leads.**

1. The parts to which wiring connections are made are to consist of binding screws with terminal plates having upturned lugs or the equivalent to hold the wires in position. Other terminal connections may be provided if found to be equivalent.

2. If a wire binding screw is employed at a field wiring terminal, the screw shall be not smaller than No. 8, except that a No. 6 screw may be used for the connection of a No. 14 AWG or smaller conductor.

3. Except as noted in the following paragraph, a terminal plate tapped for a wire binding screw shall be of metal not less than 0.050 inch in thickness for a No. 8 or larger screw, and not less than 0.030 inch in thickness for a No.8 screw, and shall have not less than two full threads in the metal.

4. A terminal plate may have the metal extruded at the tapped hole for the binding screw so as to provide two full threads. Other constructions may be employed if they provide equivalent security.

5. Leads provided for field connections shall be not less than 6 inches long, provided with strain relief, shall be not smaller than No. 18 AWG, and the insulation, if of rubber or thermoplastic, shall be not less than $^{1}/_{32}$ inch in thickness.

6. The leads specified in Item 5 may be less than 6 inches in length if it is evident that the use of a longer lead might result in a hazard.

7. In a detector intended for connection to a high-voltage source of supply by means of other than a metal-enclosed wiring system, such as nonmetallic sheathed cable:

   A. An equipment-grounding terminal or lead shall be provided.

   B. A marking shall be provided to indicate the system or systems for which it is suitable. (See Item 1, L of Section 12-72-302 (b).

   C. The grounding means shall be reliably connected to all exposed dead metal parts which are liable to become energized and all dead metal parts within the enclosure which are exposed to contact during servicing and maintenance.

8. The surface of an insulated lead intended solely for the connection of an equipment-grounding conductor shall be green, with or without one or more yellow stripes and no other leads visible to the installer, other than grounding conductors, shall be so identified.

9. A field-wiring terminal intended for connection of an equipment-grounding conductor shall be plainly identified, such as being marked G, GR, Ground, Grounding, or the equivalent, or by a suitable marking on a wiring diagram provided on the detector. The field-wiring diagram is provided on the detector. The field-wiring terminal shall be so located that it is unlikely to be removed during normal servicing of the detector.

10. A field-wiring terminal for the connection of a grounded supply conductor shall be identified by means of a metallic plated coating substantially white in color and shall be readily distinguishable from the other terminals, or proper identification of the terminal for the connection of the grounded conductor shall be clearly shown in some other manner, such as on an attached wiring diagram.

11. A field-wiring lead provided for connection of a grounded supply conductor shall be finished to show a white or natural gray color and shall be readily distinguishable from other leads and no other leads, other than grounded conductors, shall be so identified.

12. A terminal or lead identified for the connection of the grounded supply conductor shall not be electrically connected to a single-pole manual switching device which has an off position or to a single-pole overcurrent (not thermal) protective device.

(l) **Field-wiring compartment.**

1. The field-wiring compartment area of a detector to which connections are to be made is to be of sufficient size for completing all wiring connections as specified by the installation wiring diagram.

2. Protection for the internal components and wire insulation from sharp edges shall be provided by insulating or metal barriers having smoothly rounded edges or by the following or equivalent instructions located in the wiring area: “CAUTION—When making installation route field wiring away from sharp projections, corners and internal components.”

3. The location of an outlet box or compartment in which field-wiring connections are to be made shall be such that these connections may be inspected after the detector is installed as intended. The removal of not more than two mounting screws, or an equivalent arrangement, to view the field connections, is considered as meeting the intent of this paragraph.

(m) **Internal wiring.**

1. The internal wiring of a unit shall consist of conductors of at least the size required by the Basic Electrical Regulations, corresponding to the current rating of the unit, and having insulation rated for the potential involved and the temperatures to which it may be subjected. The wiring shall be routed away from moving parts and sharp projections and held in place with clamps, string ties or equivalent, unless of sufficient rigidity to retain a shaped form.

2. Leads or a cable assembly connected to parts mounted on a hinged cover shall be of sufficient length to permit the full opening of the cover without applying stress to the

leads or their connections. The leads shall be secured or equivalently arranged to prevent abrasion of insulation and jamming between parts of the enclosure.

3. If the use of a short length of insulated conductor is not feasible, e.g., a short coil lead or the like, electrical insulating tubing may be employed. The tubing is not to be subjected to sharp bends, tension, compression, or repeated flexing, and is not to contact sharp edges, projections, or corners. The wall thickness of the tubing is to conform to the requirements for such tubing, except that the wall thickness at any point for polyvinyl chloride tubing of $^{3}/_{8}$-inch diameter or less, is to be not less than 0.017 inch. For insulating tubing of other types, the wall thickness is to be not less than required to at least equal the mechanical strength, dielectric properties, heat and moisture resistant characteristics, etc. of polyvinyl chloride tubing having a wall thickness of 0.017 inch.

4. Internal wiring of circuits which operate at different potentials shall be reliably separated by barriers or shall be segregated, unless the conductors of the circuits of lower voltage are provided with insulation equivalent to that required for the highest voltage involved. Segregation of insulated conductors may be accomplished by clamping, routing or equivalent means which ensures permanent separation. See Item 10.

5. Stranded conductors clamped under wire-binding screws or similar parts shall have the individual strands soldered together or be equivalently arranged to ensure reliable connections.

6. Wireways shall be smooth and free from sharp edges, burrs, fins, moving parts, etc., which may cause abrasion of the conductor insulation.

7. All splices and connections shall be mechanically secured and bonded electrically.

8. A splice shall be provided with insulation equivalent to that of the wires involved if permanence of electrical spacing between the splice and uninsulated metal parts is not assured.

9. Splices shall be located, enclosed and supported so that they are not subject to damage from flexing, motion or vibration.

10. A metal barrier shall have a thickness at least equal to that required by Table 12-72-3B, based on the size of the barrier. A barrier of insulation material shall be not less than 0.028 inch in thickness and shall be of greater thickness if its deformation may be readily accomplished so as to defeat its purpose. Any clearance between the edge of a barrier and a compartment wall shall be not more than $^{1}/_{16}$ inch.

11. Where a lead or wire harness passes through an opening in a wall, barrier, or enclosing case, there shall be a metal or insulating type bushing, or the equivalent, which shall be substantial, reliably secured in place, and shall have a smooth rounded surface against which the wire may bear.

12. If the opening is in a phenolic composition or other suitable nonconducting material or in metal of thickness greater than 0.042 inch, a smooth surface having rounded edges is considered to be the equivalent of a bushing.

13. Ceramic materials and some molded compositions are considered to be acceptable for insulating bushings, but separate buildings of wood and of hot-molded shellac are not acceptable.

14. Fiber may be employed where it will not be subjected to a temperature higher than 90°C (194°F) under normal operating conditions, the bushing is not less than $^{1}/_{16}$ inch in thickness with a minus tolerance of $^{16}/_{4}$ inch for manufacturing variations, and it is so formed and secured in place that it will not be affected adversely by ordinary ambient conditions of humidity.

15. If a soft-rubber bushing is employed in a hole in metal, the hole shall be free from sharp edges, burrs, projections, etc., which would be likely to cut into the rubber.

16. An insulating metal grommet may be considered acceptable in lieu of an insulating bushing, provided that the insulating material used is not less than $^{1}/_{32}$ inch in thickness and fills completely the space between the grommet and the metal in which it is mounted.

17. A strain relief means shall be provided for the field supply leads, and all internally connected wires or cords which are subject to movement in conjunction with the installation, operation or normal servicing of a detector to prevent any mechanical stress from being transmitted to terminals and internal connections. Inward movement of the cord or leads provided with a ring-type strain relief means shall not damage internal connections or components, or result in a reduction of electrical spacings.

18. Each lead employed for field connections or an internal lead subjected to movement or handling during installation and normal servicing shall be capable of withstanding for one minute a pull of 10 pounds without any evidence of damage or of transmitting the stress to internal connections.

(n) **Lampholders and lamps.**

1. Lampholders and lamps shall be rated for the circuit in which they are employed when the detector is operated under any condition of normal service.

2. A lampholder employing a screw shell shall be so wired that the screw shell will be connected to an identified (grounded circuit) conductor.

3. If more than one screw shell-type lampholder is provided, the screw shells of all such lampholders shall be connected to the same conductor unless there is no shock hazard present (30 volts RMS or less) when replacing the lamps.

4. A lampholder shall be installed so that uninsulated live parts will not be exposed to contact by persons removing or replacing lamps in normal service.

(o) **Operating components.**

1. Operating components and assemblies, such as switches, relays and similar devices, shall be adequately protected by individual protection or dust-tight cabinets, against fouling by dust or by other material which may affect their normal operation.

2. Moving parts shall have sufficient play at bearing surfaces to prevent binding.

3. Provision shall be made to prevent adjusting screws and similar adjustable parts from loosening under the conditions of actual use.

4. Manually operated parts shall have sufficient strength to withstand the stresses to which they will be subjected in operation.

5. An electromagnetic device shall ensure reliable and positive electrical and mechanical performance under all conditions of normal operation.

(p) **Switches.**

1. A switch provided as part of a unit shall have a current and voltage rating not less than that of the circuit which it controls when the device is operated under any condition of normal service.

2. If a reset switch is provided, it shall be of a self restoring type.

(q) **Over-current protection.** Fuse holders, fuses and circuit breakers provided on a detector unit shall be rated for the application.

(r) **Printed wiring boards.** Printed wiring boards shall be acceptable for the application. The securing of components to the board shall be made in a reliable manner and the spacings between circuits shall comply with the spacings requirements. The board shall be reliably mounted so that deflection of the board during servicing shall not result in damage to the board or in a fire or shock hazard. (See SFM 12-72-1.)

(s) **Service and maintenance protection.**

1. An uninsulated live part and hazardous moving parts within the enclosure shall be located, guarded or enclosed so as to minimize the likelihood of accidental contact by persons performing service functions which may have to be performed with the equipment energized.

2. Manual-switching devices may be located or oriented with respect to uninsulated live parts or hazardous moving parts so that manipulation of the mechanism can be accomplished in the normal direction of access if uninsulated live parts or hazardous moving parts are not located in front (in the direction of access) of the mechanism and are not located within 6 inches on any side or behind the mechanism, unless guarded.

3. In determining compliance with Item 2, only uninsulated live parts in high-voltage circuits are to be considered.

4. An electrical control component which may require examination, adjustment, servicing or maintenance while energized (excluding voltage measurements except for jacks or terminals specifically intended for that purpose) shall be located and mounted with respect to other components and with respect to grounded metal parts so that it is accessible for electrical service functions without subjecting persons to the likelihood of shock hazard from adjacent uninsulated live parts or to accident hazard from adjacent hazardous moving parts.

5. Other arrangements of location of components and/or guarding are also acceptable where electrical components are accessible for service as indicated by Item 4.

6. The following are not considered to be uninsulated live parts: (1) coils of controllers, relays and solenoids, and transformer windings, if the coils and windings are provided with suitable insulating overwraps, (2) enclosed motor windings, (3) terminals and (4) splices with suitable insulation and insulated wire.

(t) **Spacings.**

1. A detector shall provide reliably maintained spacings between uninsulated live parts and dead metal parts and between uninsulated live parts of opposite polarity. The spacings shall be not less than those indicated in Table 12-72-3E.

2. The spacing between an uninsulated live part and a wall or cover of a metal enclosure, a fitting for conduit or metal-clad cable, and any dead-metal part shall be not less than that indicated in Table 12-72-3E.

3. The through air and over surface spacings at an individual component part are to be judged on the basis of the volt-amperes used and controlled by the individual component. However, the spacing from one component to another, and from any component to the enclosure or to other uninsulated dead metal parts excluding the component mounting surface, shall be judged on the basis of the maximum voltage and total volt-ampere rating of all components in the enclosure.

4. The spacing requirements in Table 12-72-3E do not apply to the inherent spacings inside motors, except at wiring terminals, or to the inherent spacings of a component which is provided as part of the detector. Such spacings are judged on the basis of the requirements for the component. The electrical clearance resulting from the assembly of a component into the complete device, including clearances to dead metal or enclosures, shall be those indicated in Table 12-72-3E.

5. The “to walls of enclosure” spacings are not to be applied to an individual enclosure of a component part within an outer enclosure.

6. An insulating liner or barrier of vulcanized fiber, varnished cloth, mica, phenolic composition or similar material employed where spacings would otherwise be insufficient, shall be not less than 0.028 inch in thickness, except that a liner or barrier

not less than 0.013 inch in thickness may be used in conjunction with an air spacing of not less than one-half of the through air spacing required. The liner shall be located so that it will not be affected adversely by arcing.

7. Insulating material having a thickness less than that specified in Item 6 may be used, if upon investigation, it is found to be adequate for the particular application.

8. Enamel-insulated wire is considered to be a bare current-carrying part in determining compliance of a device with the spacing requirements, but enamel is acceptable as turn-to-turn insulation in coils.

PERFORMANCE

Sec. 12-72-303.

(a) **General.**

1. Unless otherwise specified, detectors representative of production are to be used for each of the following tests.

2. The devices employed for testing are to be those specified by the wiring diagram of the detector, except that substitute devices may be used if they produce functions and load conditions equivalent to those obtained with the devices intended to be used with the detector in service.

3. Data on detector components, e.g., capacitors, resistors (other than carbon or wire wound), solid state devices, etc., shall be provided by the manufacturer for evaluation of the reliability of the components for the intended application. If a Mil-Spec. is referenced, a copy of the specification is to be provided for review. A failure rate of 0.5 failure per million hours for nonsupervised components would be acceptable.

4. The data required in the preceding paragraph shall include the following:

   A. **Component fault analysis.** Effect of failure, open and short, particularly of capacitors, on operation of a detector.

   B. A description of any component screening and burn-in test, if available.

   C. Amount of derating of components under normal standby and alarm conditions. A derating of 50 percent or more is acceptable for all components except for electrolytic capacitors. See also Table 12-72-3F.

   D. **Component failure rate data at rated values and derated values.** This may be in the form of a reference to a Mil-Spec. handbook or equivalent.

   E. Maximum ratings for components.

   F. Any other data, not included above, which will provide an equivalent reliability analysis.

DETECTOR RATED VOLTAGE, NAMEPLATE	TEST VOLTAGE
110 to 120	120
220 to 240	240
Other	Marked Rating

5. Unless specifically specified otherwise, the test voltage for each test of a detector shall be as follows at rated frequency:

6. The following samples are used to perform the tests of this standard:

   A. At least 20 assembled detectors fully representative of production units.

   B. One additional unassembled detector fully representative of production units.

   C. Five additional samples of detectors employing a radioactive source. These may be partial assemblies illustrating the radioactive source installation.

   D. Three control units and/or power supplies if the detectors are intended specifically to be employed with a specific unit or power supply.

   E. The monitoring instrument or reference to a commonly available meter intended to monitor sensitivity of a detector.

(b) **Normal operation.**

1. A detector shall be capable of operating for all conditions of its intended performance at all sensitivity settings when employed in conjunction with any related power supply or control unit with which it is intended to be employed and indicating devices to form the system combination covered by the installation wiring diagram and any supplementary information provided.

2. The test voltage shall be in accordance with Section 12-72-303 (a), Item 5, and the combustion products detector shall be in the normal circuit supervisory standby condition and prepared for normal signaling operation when it is connected to related devices and circuits.

3. The introduction of combustion products into the detector chamber such as produced by a smoldering cotton lamp wick, rope or equivalent, shall result in the operation of the detector in its intended manner. Section 12-72-303 (p), Item 2.

(c) **Power input and output.** The input or output current of each circuit of a combustion products detector shall not exceed the marked rating by more than 10 percent when the detector is operated under the conditions of normal use and with the detector connected to a source of supply in accordance with Section 12-72-303 (a), Item 5.

(d) **Electrical supervision.**

1. All nonreliable components such as electronic tube heaters, blower motors, capacitors, functional heating elements, etc., the failure of which may result in an open or shorted

condition shall be electrically supervised. See Sections 12-72-302 (e); 12-72-303 (a), Item 3; 12-72-303 (e) and 12-72-303 (s).

2. All electrical circuits formed by conductors extending from the installation wiring connections for interconnecting to a power supply or system control units the failure of which may result in an open or ground fault shall be electrically supervised either at the detector or at the control unit to which a detector would be connected. See Section 12-72-302 (e).

3. The requirements of Sections 12-72-392 (d), Items 1 and 2, do not apply to the following:

   A. Trouble indicating circuits.

   B. The circuits of a detector employed only for releasing device service if the fault results in the same operation of the unit as that obtained by detection of combustion products.

   C. A circuit for a supplementary signal annunciator, signal sounding appliance, motor controller, or similar appliance provided that a break or a ground fault in no way affects the normal operation of the unit except for omission of the supplementary feature.

(e) **Electrical supervision test.**

1. The electrical circuits formed by conductors extending from the installation wiring connections of a detector for interconnection to a power supply source or system control unit initiating device circuit shall be electrically supervised so that the detector trouble signal or circuit is energized under any of the following fault conditions if the fault prevents normal operation of the detector for fire alarm signals.

   A. Single open or single ground fault of the connecting field wiring.

   B. Failure of a nonreliable component. See Sections 12-72-303 (d), Item 1; 12-72-303 (a), Item 3; and 12-72-303 (s).

2. A motor included in a detector, such as a blower motor which is required to operate continuously during normal operation, shall be supervised to indicate stalling or burnout.

3. The heaters of all electronic tubes or other functional heating elements employed in a detector shall be electrically supervised to indicate an open circuit fault by an audible trouble signal if the fault prevents normal operation of the unit.

4. Internal shorts between any two elements of an electronic tube shall be indicated by either a trouble signal or an alarm signal if such failure prevents normal operation of the unit. Such a failure shall not result in a fire hazard.

5. Interruption and restoration of any source of electrical power connected to a detector unit shall not cause an alarm signal.

6. The operation of any manual switching part of a detector unit to other than its normal position while the detector unit is in the normal standby condition shall be indicated by a trouble signal, if the off-normal position of the switch interferes with normal operation of the detector unit.

7. To determine if a detector unit complies with the requirements for electrical supervision, see Section 12-72-303 (d). The detector is to be tested with the representative system combination in its normal supervisory condition, and the type of fault to be detected is then to be introduced. Each fault shall be applied separately, the results noted and the fault removed. The system combination is then to be restored to its normal supervisory condition prior to establishing the next fault.

(f) **Sensitivity test.**

1. A combustion products detector shall operate within the limits specified below when subjected to a smoldering smoke condition using the combustion products and test equipment described in the following paragraphs. If the detector employs a variable sensitivity setting, test measurements are to be made at maximum, minimum and nominal settings.

   A. Visible Smoke Obscuration Limits—

      0.0 percent per foot maximum (0.013)[1]

      0.2 percent per foot minimum (0.001)[1]

   B. Relative Combustion Products Measurement Limits—

      9.0 volts maximum

      1.0 volt minimum

   C. Monitoring Means—

      Within 25 percent of the operating limits of the detector rating.

2. **Combustion products.** A mercerized cotton lamp wick, nominally $^{7}/_{8}$ inch wide by $^{1}/_{8}$ inch in cross section and secured by an alligator type clip 3 inches below a removable cover assembly is to be employed as the source of combustion products. The wick end is to be cut square and smoldering initiated by momentarily placing the wick end over a horizontally mounted resistive heater element energized to a dull red color. Smoldering may be promoted by passing a slow current of air over the wick end. The smoldering end is to be cut away approximately $^{1}/_{4}$ inch above the charred section prior to conducting a succeeding trial. The smoldering rate of the wick is to

be such that the visible smoke obscuration increases at an approximate uniform rate of 1.5 ± 0.2 percent per foot (0.0329 0.001 optical density per foot).

(g) **Test equipment and methods.**

1. The visible smoke obscuration (optical density) in the test compartment is to be measured by means of a direct current (DC) type microammeter having a maximum internal resistance of 100 ohms used with a barrier type selenium photovoltaic cell, enclosed in a hermetically sealed case.2 The meter and cell are used in conjunction with the light produced by a tungsten filament automotive type lamp rated 6 volts and energized from a regulated supply to provide a light beam of uniform flux density. The photoelectric cell and lamp are to be spaced 5 feet apart. The following equations are to be used:

   A. At any distance, the percent obscuration per foot will be:

$$O_u = [1 - (T_s / T_c)^{1/d}]\ 100$$

   where:

O_u	=	Percent obscuration per foot.
T_s	=	Smoke density meter reading with smoke.
T_c	=	Smoke density meter reading with clear air.
d	=	Distance in feet (m × 3.33).

   B. The percent obscuration of light for the full length beam at any distance will be:

$$O_d = [1 - (T_s / T_c)]\ 100$$

   where:

O_d	=	Percent obscuration at distance *d*.
T_s	=	Smoke density meter reading with smoke.
T_c	=	Smoke density meter reading with clean air.

   C. When the percent obscuration per foot is known, the percent obscuration for the full length of any longer beam can be determined by the following:

$$O_d = [1 - [1 - (O_u / 100)]^d]\ 100$$

   where:

O_d = Percent obscuration at distance *d*.

O_u = Percent obscuration per foot.

d = Distance in feet (m × 3.33).

D. At any distance, the total optical density will be:

$$OD_t = \text{Logo}_{10} (T_c / T_s)$$

where:

OD_t = Optical density.

T_c = Smoke density meter reading with clear air.

T_s = Smoke density meter reading with smoke.

E. At any distance, the optical density per foot will be:

$$OD_f = [\text{Logo}_{10} (T_c / T_s)]/d$$

OD_f = Optical density per foot.

T_c = Smoke density meter reading with clear air.

T_s = Smoke density meter reading with smoke.

d = Distance in feet (m × 3.33).

2. A meter[3] calibrated in volts is to be used to measure the relative buildup of primarily invisible products of combustion. The meter, used with an ionization detecting monitoring head without an alarm indicating circuit, has Americium 241 as the radioactive element. The monitoring head is to be located in the test chamber adjacent to the sample under test

3. **Test chamber.** The following items refer to Figure 12-72-3-1.

A. **Cabinet.** Plywood, $^3/_4$ inch thick, except for $^1/_4$ inch thick clear plastic front panel. Overall dimensions approximately $69^1/_2$ inches long, 18 inches high, 11 inches deep. A center divider forms two equal 8 inches high by 10 inches deep interior compartments. Inside of lower left side of plastic front panel, as well as all interior surfaces of the cabinet are to be painted flat black. Plastic front assembled with rubber gasket.

B. **Combustible.** Cotton wick. See Section 12-72-303 (f), Item 2. Secured by alligator type clip to removable cap which covers a $3\frac{1}{4}$-inch diameter hole in top of compartment. Cap measures approximately 4 inches square. Center of hole located approximately 16 inches from left end.

C. **Air dispersing medium.** Three-fourths inch nominal diameter solid glass beads to fill to capacity an expanded metal container, approximately 4 inches wide, 8 inches high, 10 inches deep. Any space between top surface of beads and compartment ceiling to be filled with foam plastic. Provides uniform flow of air and combustion products. Center of unit approximately 22 inches from right-hand side of compartment.

D. **Air circulating fan.** Motor mounted on $\frac{1}{4}$-inch plastic support which fits into slots of compartment and fills completely the upper chamber. Employs 5 inch (100 cfm) diameter fan.

E. **Opening.** Rectangular hole, approximately 6 by 4 inches, center of opening 4 inches from end of cabinet.

F. **Exhaust fan.** Same as Item D. Mounted in end wall of compartment.

G. **Exhaust fan cover.** Plastic, approximately $5\frac{3}{4}$ inches wide, 10 inches long, by $\frac{3}{16}$ inch thick. Fitted in slots.

H. **Lamp.** Low voltage automobile-type lamp. See Section 12-72-303 (g), Item 1.

I. **Monitoring head.** Ionization detector mounted on back wall in test area. See Section 12-72-303 (g), Item 2. Employed with Item M.

J. **Photovoltaic cell.** See Section 12-72-303 (g), Item 1. Mounted on Item K. Has a linear response up to 800 microamperes at 200 foot candles.

K. **Air dispersing medium.** Same as Item C, except 3 inches wide.

L. **Opening.** Rectangular, approximately 6 by 2 inches, center of opening 3 inches from left end. Covered with perforated metal having approximately 50 percent openings.

M. **Combustion products meter.** See Section 12-72-303 (g), Item 2. Meter is to have a 0–10 volts scale. Employed with ionization head (Item I). Provides indication of relative build-up of combustion products in test chamber.

N. **Control equipment.** Includes fan and switch controls, lamp voltage control and terminals for connection of microammeter.

O. **Obscuration equipment meter.** See Section 12-72-303 (g), Item 1. Meter is to have 0–100 or 0–200 microamperes full scale.

P. **Access door for test sample.** Plastic, approximately $11\frac{1}{2}$ by $7\frac{1}{2}$ by $\frac{1}{4}$ inch thick. Secured by hinges and spring catch to front section. Center of door approximately 30 inches from right-hand side of cabinet. Fitted with rubber gasket to prevent air loss.

4. **Test method.** The test is to be conducted in an ambient temperature of 23 ± 3°C (73.4 ± 5°F) at a relative humidity between 30–50 percent and a barometric pressure of not less than 700 millimeters of mercury. A minimum of 12 samples of the detector, previously energized for at least 16 hours or as recommended by the manufacturer from a source of supply in accordance with Section 12-72-303 (a), Item 5, are to be subjected to this test. The samples shall be momentarily disconnected from the source of supply, placed in the center of the lower section of the test chamber with the signaling contacts connected to an indicating circuit and re-energized from the specified source of supply.

5. With the air velocity in the test compartment maintained at 30-35 feet per minute (fpm), as measured in the sample area, the wick is to be inserted into the upper chamber with the smoldering end facing downward. The air flow is to be parallel to the $\frac{1}{8}$-inch thick end of the wick and the wick end is to be approximately 3 inches below the compartment roof. See Section 12-72-303 (r), Item 2. Operation is to be continued until the detector is actuated in an alarm condition. Five test trials shall be conducted on each sample with at least a five-minute interval between each trial. The following readings are to be recorded for each trial at the moment of actuation: (1) visible smoke obscuration, (2) combustion products meter reading, (3) elapsed time of test trial and (4) the monitoring means. If a detector has a variable sensitivity setting, five trials are to be made at the maximum, minimum and nominal sensitivity settings.

6. The detector shall be uniform in operation so that the average of the readings of the smoke density and combustion products meters of the mean three of five trials (highest and lowest not included) of one detector shall be within 50 percent of the mean average of all detectors. If a detector has a variable sensitivity setting, the requirement applies to each setting tested.

7. There shall be no false alarms or effect on operation of a detector set at the maximum sensitivity setting when two representative samples are subjected to the following test conditions:

   A. Operation for three months in an ambient room temperature of approximately 25 ± °C (77 ± 5°F) and relative humidity of 30–50 percent, having a relatively clean atmosphere with minimum air movement.

   B. Operation for three months in a relatively clean atmosphere in laminal air stream having a velocity of 300 ± 25 fpm. in an ambient room temperature of approximately 25 ± 3°C (77 ± 5°F) and relative humidity of 30–50 percent.

   C. Ten cycles of humidity variation between 20 and 90 ± 5 percent at room temperature

D. Ten cycles of temperature variation between 17.8°C and 66°C (0°F and 150°F).

E. Ten cycles of rapid change of air velocity from 0 to 300 ± 25 fpm.

F. Ten cycles of a 2-inch drop of air pressure starting from 29-31 ± 0.5 inch of mercury.

G. Fifty cycles of momentary interruption of the detector power supply at a rate of not more than 6 cycles per minute.

8. Two detectors, employing a maximum sensitivity setting are to be mounted in a position of normal use, energized from a source of supply in accordance with Section 12-72-303 (a), Item 5, and subjected to each of the above test conditions.

9. For tests, C, D and F of Section 12-72-303 (g), Item 5, the time of cycling from one extreme to the other shall be a maximum of one hour and a minimum of five minutes. For test E the air velocity is to be turned on and off abruptly with a maximum of one hour between applications. For test F the time of change from one pressure to the other is approximately one-half minute. The cycling is conducted at a rate not faster than once per 10 seconds. Each cycle is to start at one test condition, changing to the other extreme, and returning to the original test condition.

10. The test samples subjected to tests A-G of Section 12-72-303 (g), Item 5, are to be tested for sensitivity, see Sections 12-72-303 (f) following the completion of the test. The response of the detectors, when tested in accordance with the sensitivity test, shall not vary more than 50 percent from the value obtained prior to the test.

(h) **Deleted.**

(i) **Fire test.**

1. At least two of the four detectors subjected to each of the following combustible tests shall operate for alarm when installed on 30-foot spacings and exposed to the following four types of controlled test fires. The maximum response time shall be two minutes for tests A, B and C, and four minutes for test D.

   A. **Paper.** Combustible is to be $^{1}/_{2}$ pound of shredded newsprint type paper, strips to be $^{1}/_{4}$ to $^{3}/_{8}$ inch wide, 6 to 24 inches long placed in a receptacle formed of $^{1}/_{4}$-inch mesh hardware cloth. The receptacle is to be approximately 12 inches in diameter by 24 inches high with a hardware cloth bottom 6 inches above the base. The combustible is to be ignited at the bottom center. Paper is to be dried prior to test.

   B. **Polystyrene.** Combustible is to be 2 ounces of typical foam polystyrene type packing material, with no flame inhibitor, each piece $^{1}/_{4}$ to $^{3}/_{8}$ inch diameter, 3 to 10 inches long placed in the same type of receptacle as used for test A. Alternate

shape of combustible is cylindrical, $^{3}/_{4}$ inch diameter by $^{1}/_{2}$ inch high having a $^{3}/_{8}$-inch diameter hole. The combustible is to be ignited at the bottom center.

C. **Gasoline.** Combustible is to be 200 cubic centimeters (cc) of regular leaded gasoline placed in a 9-inch diameter steel pan container $1^{1}/_{2}$ inches deep.

D. **Wood brand (Class A).** Combustible is to be three layers of kiln dried fir strips, each strip $^{3}/_{4}$ inch in cross section, 12 inches long with 12 strips in each layer. Strips are to be nailed or stapled together with adjacent layers at right angles to each other. Overall dimensions of wood brand is approximately 12 by 12 by $2^{1}/_{4}$ inches high. The brand is to be ignited by burning 100 cc of denatured alcohol consisting of 190 proof (95 percent) ethanol to which 5 percent methanol is added as a denaturant. The alcohol is placed in the same type of container as used for test C.

2. The fire tests are to be conducted in a room having a smooth ceiling with no physical obstructions between the fire source and detectors and with minimum air movement. The room is to be provided with means for the removal of combustion products, such as vents or exhaust fans. Heaters are to be provided for maintaining the room temperature ambient, if necessary. The heaters are to be shut off during a test trial. The room shall be of sufficient cross-sectional area so that the detectors can be located in accordance with the spacing layout illustrated by Figure 12-72-3-2 and any reflection of combustion products is prevented from returning to the detectors from adjacent walls during the course of the test. The room height shall be such that the vertical distance from the base of the combustible to the ceiling is approximately 12 feet.

3. The tests are to be conducted in an ambient temperature between 15.6°C and 26.7°C (60°F and 80°F) and a relative humidity of 50 ± 20 percent. The test samples are to be energized from a source of supply in accordance with Section 12-72-303 (a), Item 5.

4. Four samples, each adjusted to their minimum sensitivity setting, are to be installed on the ceiling at a 30-foot spacing schedule with relation to the test fire (21.2-foot linear distance measured along the ceiling to a point directly over the center of the test fire). See Figure 12-72-3-2. The time starts at the moment of ignition. At least two trials shall be conducted for each combustible. Each detector shall respond at least once to each of the four combustibles employed.

5. Sensitivity monitoring instruments are to be employed to determine that the test room area is free of products of combustion prior to conducting a test.

(j) **Temperature test.**

1. The materials or components employed in a detector shall not be affected adversely by the temperatures attained under any condition of normal operation.

2. A material or component will be considered as being adversely affected if it is subject to a temperature rise greater than that indicated in Table 12-72-3F.

3. The classes of material used for electrical insulation referred to in Items 8 and 9 of Table 12-72-3F include the following:

   Class A — Impregnated cotton, paper and similar (Class 105) organic materials when impregnated, and enamel as applied to coil windings.

   Class B — Inorganic materials, such as mica and (Class 130) impregnated asbestos.

4. All values for temperature rises apply to equipment intended for use in ambient temperatures normally prevailing which usually are not higher than 25°C (77°F). If equipment is intended specifically for use with a prevailing ambient temperature constantly more than 25°C (77°F), the test of the equipment is made at the higher ambient temperature, and the allowable temperature rises specified in the table are to be reduced by the amount of the difference between that higher ambient temperature and 25°C (77°F).

5. Temperature measurements on equipment intended for recessed mounting shall be made with the unit installed in an enclosure of nominal $^{3}/_{4}$-inch wood having clearances of 2 inches on the top, sides and rear, and the front extended to be flush with the detector cover.

6. A temperature is considered to be constant when three successive readings, taken at not less than five minute intervals, indicate no change.

7. Temperatures are to be measured by means of thermocouples consisting of wires not larger than No. 24 AWG. The preferred method of measuring the temperature of a coil is the thermocouple method, but a temperature measurement by either the thermocouple or resistance method is acceptable, except that the thermocouple method is not to be employed for a temperature measurement at any point where supplementary thermal insulation is employed.

8. If thermocouples are used in the determination of temperatures, it is standard practice to employ thermocouples consisting of No. 24-30 AWG iron and constantan wires and a potentiometer type indicating instrument. Such equipment will be used whenever referee temperature measurements by thermocouples are necessary.

9. The thermocouple wire is to conform with the requirements for “special” thermocouples as listed in the Table of Limits of Error of Thermocouples in ANSI C96.1-1964 (R1969).

10. The temperature of a copper coil winding is determined by the resistance method by comparing the resistance of the winding at the temperature to be determined with the resistance at a known temperature by means of the equation:

$$TE\ (R/r)\ (234.5 + t) - 234.5$$

where:

T = is the temperature to be determined in degrees C.
t = is the known temperature in degrees C.
R = is the resistance in ohms at the temperature to be determined.
r = is the resistance in ohms at the known temperature.

11. As it is generally necessary to de-energize the winding before measuring *R*, the value of *R* at shutdown may be determined by taking several resistance measurements at short intervals, beginning as quickly as possible after the instant of shutdown. A curve of the resistance values and the time may be plotted and extrapolated to give the value of *R* at shutdown.

12. To determine compliance with this test, a detector is to be connected to a source of supply in accordance with Section 12-72-303 (a), Item 5, and operated under the following conditions:

    A. **Normal standby—**(16 hours) constant temperatures.

    B. **Alarm—**(1 hour).

    C. **Alarm—**(7 hours) abnormal test.

13. For test condition *C* the temperature limits may be exceeded but there shall be no manifestation of a fire hazard or approaching failure and the detector shall operate in a normal manner following the test.

14. The detector is to be subjected to the Dielectric Withstand Test following the above test.

(k) **Over-and-under voltage operation.**

1. A detector shall withstand the continuous application of 110 percent of the test voltage specified by Section 12-72-303 (a), Item 5, in the normal standby condition at maximum and minimum sensitivity settings without being affected adversely and shall operate successfully for normal signaling performance at the specified increased voltage. Sensitivity measurements at the increased voltage shall be within 50 percent from the readings measured at rated voltage.

2. For operation at the higher voltage four new detectors are to be subjected to the specified increased voltage in the normal standby condition for at least 16 hours and then tested for normal signaling operation and sensitivity.

3. A detector shall operate for its normal signaling performance while energized from a supply of 85 percent of the test voltage specified by Section 12-72-303 (a), Item 5, for both maximum and minimum sensitivity settings. Sensitivity measurements at the reduced voltage shall be at 50 percent of the readings measured at rated voltage.

4. For operation at the reduced voltage four new detectors are to be energized from a source of supply in accordance with Section 12-72-303 (a), Item 5, following which the voltage is to be reduced to 85 percent of nameplate rating and then tested for normal signaling operation and sensitivity.

(l) **Variable ambient temperature.**

1. A detector shall be capable of operating in a normal manner when tested in an ambient temperature of 0°C and 49°C (32°F and 120°F), at a relative humidity between 30-50 percent.

2. Two detectors are to be maintained at each ambient temperature for a sufficient length of time to ensure that thermal equilibrium has been reached. The units are then to be tested for sensitivity while connected to a source of supply in accordance with Section 12-72-303 (a), Item 5.

3. Sensitivity measurements shall be recorded before and during exposure to each ambient temperature in accordance with the sensitivity test.

4. Each unit shall operate normally in each ambient. The sensitivity readings measured with the units in each ambient temperature shall be within 50 percent of the value recorded in the normal ambient condition.

(m) **Overload.**

1. A detector shall be capable of operating in a normal manner after being subjected to 50 cycles of alarm signal operation at a rate of not more than six cycles per minute with the supply circuit to the detector at 115 percent of rated nameplate voltage. Each cycle shall consist of starting with the detector energized in the normal standby condition, initiation of an alarm by smoke or electrical means, and restoration of the detector to normal standby condition.

2. Rated test loads are to be connected to those output circuits of the detector which are energized from the detector power supply, such as remote indicators, relays, etc. The test loads shall be those devices, or the equivalent, normally intended for connection. If an equivalent load is employed for a device consisting of an inductive load, a power factor of 60 percent is to be employed. The rated loads are established initially with the detector connected to a source of supply in accordance with Section 12-72-303 (a), Item 5, following which the voltage is increased to 115 percent of rating.

3. For direct current signaling circuits an equivalent inductive test load is to have the required direct current resistance for the test current and the inductance (calibrated) to obtain a power factor of 60 percent when connected to a 60 Hertz (Hz) alternating current potential equal to the rated direct current test voltage. When the inductive load has both the required direct current resistance and the required inductance, the current measured with the load connected to an alternating current circuit will be equal to 0.6 times the current measured with the load connected to a direct current circuit when the voltage of each circuit is the same.

4. Separately energized circuits of a detector such as dry contacts shall be capable of operating in a normal manner after being subjected for 50 cycles of signal operation at a rate of not more than six cycles per minute while connected to a source of supply in accordance with Section 12-72-303 (a), Item 5, with 150 percent rated loads at 60 percent power factor applied to output circuits which do not receive energy from the detector. There shall be no electrical or mechanical failure of the switching circuit.

5. The test loads shall be set at 150 percent of rated current while connected to a separate power source of supply in accordance with Section 12-72-303 (a), Item 5.

(n) **Endurance.**

1. A detector shall be capable of operating in a normal manner after being subjected to 6,000 cycles of alarm signal operation at a rate of not more than 10 cycles per minute with the detector connected to a source of supply in accordance with Section 12-72-303 (a), Item 5, and with related devices or equivalent loads connected to the output circuits. There shall be no electrical or mechanical failure or evidence of failure of the detector components. The same detector shall be tested that had been subjected previously to the overload test.

2. Separately energized circuits of a detector shall be capable of performing acceptably when operated for 6,000 cycles at a rate of not more than 10 cycles per minute. When an electrical load is involved, the contacts of the device shall be caused to make and break the normal current at the voltage specified by Section 12-72-303 (a), Item 5. The load shall represent that which the device is intended to control. The endurance tests of the separately energized circuits may be conducted in conjunction with the endurance test of the detector. There shall be no electrical or mechanical failure of the detector nor undue pitting, burning or welding of any relay contacts.

(o) **Dielectric tests.**

1. A detector shall be capable of withstanding, without breakdown for a period of one minute, the application of a 60 Hz alternating potential between high-voltage, live parts and dead-metal parts, and between live parts of high- and low-voltage circuits, except as noted in Item 2. The test potential shall be:

   A. 1,000 volts RMS plus twice rated voltage for high-voltage circuits.

2. A detector employing a low-voltage circuit shall be capable of withstanding, for one minute without breakdown, a 60 Hz alternating potential of 500 volts RMS applied between low-voltage live parts and dead-metal parts.

3. Any reference grounds shall be disconnected prior to the test applications.

4. A transformer, the output voltage of which is essentially sinusoidal, can be varied and can maintain the specified high potential voltage at the equipment during the duration of the test and is to be used to determine compliance with the foregoing. The applied potential is to be increased gradually from zero until the required test value is reached and is to be held at that value for one minute.

(p) **Abnormal operation.**

1. A detector shall be capable of operating continuously under abnormal conditions without resulting in a fire hazard.

2. To determine if a detector complies with the requirement of Item 1, it is to be operated under the most severe abnormal conditions liable to be encountered in service while connected to a source of supply in accordance with Section 12-72-303 (a), Item 5. Emission of flame or molten metal, or any other manifestation of a fire hazard, is considered to be a failure.

3. In determining if a detector complies with the requirement with respect to circuit-fault conditions, the fault condition is to be maintained continuously until constant temperatures are attained, or until burnout occurs, if the fault does not result in the operation of an overload protective device. Shorting of electrolytic capacitors would represent a typical fault.

(q) **Transient tests.**

1. Two detectors shall be capable of operating in a normal manner after being subjected to 500 externally induced and 500 internally induced transients while energized from a source of supply in accordance with Section 12-72-303 (a), Item 5, and connected to the devices normally used with the unit.

2. The primary of a 120/240 volt, 60 Hz, 2 kilovolt-amperes (kVA) isolating power transformer, with the secondary open circuited, is to be connected to the same branch circuit as the detector. The input to the transformer is to be de-energized for approximately one second by an automatic switching device at a rate of not more than six cycles per minute for 500 cycles. During the test the detector is to be operated for normal signaling performance to determine whether transients, generated by the random collapse of the magnetic field of the transformer, resulted in a component failure or other adverse effect.

3. The electrical characteristics of the testing transformer are as follows:

	VOLTAGE	**FREQUENCY**	**INDUCTANCE *(L)* MILLIHENRIES**	**QUALITY FACTOR *Q***	**DC RESISTANCE *(R)* OHMS (23°C)**
Primary winding	120	1,000	21.2	11.50	0.244
Secondary winding	240	1,000	109.3	4.65	0.371

4. Two detectors are to be energized in the normal standby condition while connected to a source of supply in accordance with Section 12-72-303 (a), Item 5, which is to be interrupted for approximately one second at a rate of not more than six cycles per minute for a total of 500 cycles. Following the test the detector is operated for normal signaling performance.

(r) **Humidity test.**

1. Two detectors shall be capable of operating in a normal manner while energized from a source of supply in accordance with Section 12-72-303 (a), Item 5, after having been exposed for 24 hours to moist air having a relative humidity of 85 + 5 percent at a temperature of 30 ± 2°C (86 ± 3°F). The sensitivity shall be determined with the detector connected to a source of supply in accordance with Section 12-72-303 (a), Item 5.

2. Sensitivity measurements shall be recorded before and during exposure to the humidity condition in accordance with the sensitivity test.

3. The sensitivity values measured with the unit in the humid atmosphere shall be within 50 percent of the value recorded in the normal ambient condition.

(s) **Component failure.**

1. Failure of electronic components of questionable reliability such as opening or shorting of electrolytic capacitors shall either have no adverse effect on normal operation or may be indicated by a trouble or an alarm signal.

2. If failure of a questionable component cannot be indicated by a trouble or alarm signal, a reliable component shall be employed. The reliability may be based on derating or on reliability data recorded for the particular component. See Section 12-72-303 (a).

(t) **Dust test.**

1. The sensitivity of a detector shall either not be affected adversely by an accumulation of dust or may result in a false alarm.

2. To determine compliance with Item 1 two samples in their normal mounting position, are to be placed, de-energized, in an air tight chamber having an internal volume of at least 3 cubic feet.

3. Approximately 2 ounces of cement dust, capable of passing through a 200 mesh screen, is to be circulated for 15 minutes by compressed air or a blower under controlled velocity conditions not exceeding 50 rpm so as to completely envelop the sample in the chamber.

4. Following the exposure to dust the detector is to be removed carefully, mounted in its intended position, energized from a source of supply in accordance with Section 12-72-303 (a), Item 5, and tested for sensitivity unless a false alarm is obtained. Sensitivity measurements after subjection to the dust test may be greater than 50 percent toward the more sensitive region but shall not be more than 50 percent toward the insensitive region.

(u) **Static discharge test.**

1. The components of a detector shall be shielded so that its operation is not affected adversely, or a false alarm obtained, when subjected to static electric discharges. Operation of the trouble circuit during this test is not considered a failure.

2. Each of two detectors is to be mounted in its intended mounting position and connected to a source of supply in accordance with Section 12-72-303 (a), Item 5. A 250 picofarad low leakage capacitor rated 10,000 volts direct current, is to be connected to two high-voltage insulated leads, 3 feet long, stripped 1 inch at each end. The end of each lead is to be attached to a metal test probe mounted on a plastic insulating rod to permit manipulation and isolation from shock hazard. The test probes shall be metallic rods with a spherical end of $^{1}/_{4}$-inch radius. The capacitors are to be charged by touching the ends of the test leads to a source of 10,000 volts direct current for at least two seconds for each discharge.

3. Ten discharges with at least a five minute interval between discharges are to be applied to different points on the exposed surface of the detector, recharging the capacitors for each discharge. Five discharges are to be made with one probe connected to earth ground and the other probed on the detector surface followed by five discharges with the polarity reversed.

4. Following the discharges, if a trouble or an alarm signal is not obtained, the detector is to be tested for sensitivity. Sensitivity measurements shall be within 25 percent of the average of the readings measured prior to the test.

(v) **Vibration test.**

1. A detector shall be capable of withstanding vibration without breakage or damage to parts. Following the vibration the detector shall be capable of operating in a normal manner.

2. To determine compliance with Item 1, sensitivity measurements following the vibration shall be conducted in accordance with the sensitivity test and shall be within 50 percent of the value recorded in the normal ambient condition.

3. Two samples, one at the maximum and one at the minimum sensitivity setting, are to be secured in their intended mounting position on a mounting board and the board, in turn, securely fastened to a variable speed vibration machine having an amplitude of 0.01 inch. The frequency of vibration is to be varied from 10 to 35 cycles per second in increments of five cycles per second until a resonant frequency is obtained. The samples are then to be vibrated at the maximum resonant frequency for a period of one-fourth hour. If no resonant frequency is obtained, the samples are to be vibrated at 35 cycles per second for a period of four hours.

4. For these tests, amplitude is defined as the maximum displacement of sinusoidal motion from a position of rest or one-half of the total table displacement. Resonance is defined as the maximum magnification of the applied vibration.

(w) **Jarring test.**

1. A detector shall be capable of withstanding jarring resulting from impact and vibration such as might be experienced in service, without affecting adversely its subsequent normal operation. A trouble signal resulting from the jarring may be permitted if the normal operation is not affected.

2. The detector and associated equipment, if any, are to be mounted in a position of intended use to the center of a 6 by 4 foot nominal $^{3}/_{4}$-inch thick plywood board which is secured in place at four corners. A 3-foot board impact is to be applied to the center of the reverse side of this board by means of a 1.18 pound, 2 inch diameter steel sphere either (1) swung through a pendulum arc from a sufficient height, *(h)* of 2.54 feet or (2) dropped from a sufficient height *(h)* of 2.54 feet to apply 3 foot-pounds of energy depending upon the mounting of the equipment. See Figure 12-72-3-3.

3. Compliance with Item 1 is to be determined by supporting the detector in its intended mounting position and conducting the jarring while the unit is in the normal standby condition and connected to a rated source of supply in accordance with Section 12-72-303 (a), Item 5. Following the jarring the unit(s) shall be tested for sensitivity. Sensitivity measurements following the jarring shall be within 25 percent of the average of the readings measured prior to the test.

(x) **Corrosion test.**

1. A detector shall be capable of operating in a normal manner after being subjected to the corrosive atmosphere tests described in the following paragraphs.

2. Two samples, one at maximum and one at minimum sensitivity setting, are to be exposed to an atmosphere containing approximately 1 percent hydrogen sulphide by volume in air saturated with water vapor at room temperature for 10 days. The units are not energized during the exposure.

3. Two samples, one at maximum and one at minimum sensitivity settings are to be exposed to an atmosphere containing approximately 1 percent carbon dioxide and 0.5 percent sulfur dioxide by volume in air saturated with water vapor at room temperature for 10 days.

4. The detectors are to be tested for sensitivity prior to exposure to the corrosive atmospheres. Twenty-four hours or more after the required exposure the detectors are to be again tested for sensitivity. Sensitivity measurements following the exposure to the corrosive atmospheres shall be within 50 percent of the value recorded in the sensitivity test, except as indicated in Item 5.

5. The sensitivity following exposure to the corrosion atmospheres described in Item 3 may exceed 50 percent from the value measured prior to the corrosion exposure if the same units, set at their minimum sensitivity, are subjected to and comply with the fire test requirements described in Section 12-72-303 (i), Items 1-5.

(y) **Radioactive element measurement test.**

1. The total activity of the radioactive source(s) of a detector shall not exceed the maximum content specified in the marking on the detector by more than 10 percent.

2. The measurement shall be made on at least five samples of the detector in the as-received condition using appropriate instrumentation and techniques.

(z) **Paint loading test.**

1. A detector shall operate in a normal manner and shall comply with the requirements of the sensitivity test after painting, if the detector assembly, screens, openings, etc., are likely to be clogged by painting. If a detector is marked prominently so it will be visible after the unit is installed which prohibits painting, then this test need not be conducted. See Section 12-72-303 (a) and (b).

2. The exterior surfaces of two samples, including screened openings, etc., are to be coated with a lead-oil base paint which is spread at approximately two times the paint manufacturer's recommended spreading rate. The paint is to be allowed to dry, for five days at room temperature. Following this, the samples are to be given a second identical application of paint and again permitted to dry for five days. The detectors are to be tested for sensitivity, one at maximum and one at minimum sensitivity setting before and after the specified paint loading. Sensitivity measurements following the paint loading shall be within 25 percent of the average of the readings measured prior to the paint loading.

1 Figure in parentheses denotes optical density per foot.

2 A meter suitable for this purpose is Weston Instrument Model 622 in conjunction with a Model 594 RR Photronic Cell.

3 A meter suitable for this purpose is a Pyrotronics, Inc., Type CPM-2 with monitoring head.

TESTS ON THERMOPLASTIC MATERIALS

Sec. 12-72-304.

(a) **General.** Thermoplastic materials included for the sole support of current carrying parts or as an enclosure of an appliance shall be subjected to the tests included in Sections 12-72-304(b) - (i) inclusive. Where possible, the complete appliance shall be used.

(b) **Temperature test.**

1. There shall be no excessive warping or exposure of high-voltage uninsulated current carrying parts so as to impair operation when representative samples of a plastic material are aged for seven hours in an air circulating oven maintained at 90°C (194°F).

2. At least three representative samples shall be placed in the oven. At the end of the seven hours, the samples shall be removed, permitted to cool and then examined for adverse distortion.

(c) **Flame test.** A plastic material employed as part of an appliance for the sole support of current carrying parts or as an enclosure shall not continue to burn for more than one minute after the fifth five-second application of a test flame, with an interval of five seconds between applications of the flame. There shall be do dripping of particles, complete consumption of the sample during the test and the material shall not be destroyed in the area of the test flame to such an extent that the integrity of the enclosure is affected. Three samples of the material or three test specimens consisting of a part or section of the polymeric enclosure shall be subjected to this test. Consideration may be given to leaving in place components and other parts which may influence the performance.

(d) Two of the three test samples shall show acceptable performance. If one sample fails, the test shall be repeated on a new sample with the flame applied under the same conditions as for the failing sample. If the new specimen fails to comply with the requirements, the material is not acceptable. The following test equipment is employed.

1. **Test chamber.** The test chamber consists of a sheetmetal cell 2 feet by 1 foot by 1 foot, open at the top and on one long side. The chamber shall be located so that an ample supply of air is provided, but the sample is not subjected to drafts. The chamber may be placed in a hood, provided that the fan is turned off during the test and is allowed to run only between tests to remove fumes.

2. A ring stand with a suitable clamp is used for supporting the specimens.

3. **Burner and mounting block.** The test flame is to be obtained by means of a Tirrill Burner having a nominal bore of $^{3}/_{8}$ inch. The tube length above the primary air inlets is to be approximately 4 inches. The burner is to be adjusted so that, while the burner is in a vertical position, the overall height of the flame is 5 inches and the height of the inner blue cone is $1^{1}/_{2}$ inches. A mounting block is to be provided so that the burner may be positioned at an angle of 20 degrees from the vertical.

4. A stopwatch or clock.

5. Circulating-air oven.

(e) **Conditioning and mounting.** The test samples are to be conditioned by placing them in a circulating-air oven maintained at a uniform temperature not less than 10°C higher than the maximum temperature of the material measured under normal operating conditions but not less than 70°C in any case. The samples are to remain in the oven for seven days. Prior to test the samples are to be returned to room temperature. The test sample is to be mounted as intended in service in the test chamber. The test flame is to be applied at an angle of 20 degrees from the vertical to any portion of the interior of the enclosure judged as liable to be ignited by proximity to live or arcing parts, coils, wiring, etc. The test flame shall be applied to a different location on each of the three samples tested. The test flame is to be applied for five seconds and removed for five seconds. The operation is to be repeated until the specimen has been subjected to a total of five applications of the test flame.

(f) **Impact test.** An appliance employing a thermoplastic enclosure shall withstand three 5 foot-pound impacts without exposure of live parts, impairment of the operation of the appliance or result in a shock hazard.

Each of two units is to be mounted securely in a position of normal use on a surface representative of a typical installation. Three 5 foot-pound impacts are to be applied to each sample, each trial on a different section of the enclosure, by means of a 1.18 pound, 2-inch diameter steel sphere swung through a pendulum arc from a sufficient height to apply 5 foot-pounds of energy.

Following the impacts, the unit is to be examined for damage and checked for normal operation by being energized from a source of rated voltage and frequency. Cracking of the enclosure is acceptable if it does not impair normal operation, but is not acceptable if a dust or moisture tight enclosure is required.

(g) **Infrared analysis of plastics.** The basic composition of a plastic material employed for the sole support of current carrying parts or an enclosure is to be by infrared analysis.

(h) **Sample preparation.** The general technique for preparing plastics for infrared analysis is to dissolve the sample in a suitable boiling hot solvent. The resulting solution is then to be placed on a sodium chloride plate from which the solvent is evaporated by gentle heating, thereby leaving a reasonably uniform thin film of the plastic on the sodium chloride plate. The salt plate is then mounted in a spectrometer and the infrared spectrum of the plastic is recorded.

A suitable solvent is one which will dissolve the plastic without reacting with it and which can be readily evaporated on gentle heating.

Examples of solvents suitable for certain polymer types are:

acetone—for polymers of high oxygen content, e.g., polyesters and phenolic resins.

o-dichlorobenzene—for simple vinyl type polymers e.g., polyvinylchlorides.

n,n-dimethylformamide—for polymers of nitrogen content, e.g., polyamides.

Some high molecular weight or highly cross-linked polymers which are insoluble in all volatile solvents are to be prepared by the pressed halide-disk technique. A few milligrams of the plastic are to be removed from the surface of a sample by a fine file. These filings are to be ground in a mechanical vibrating ball mill for three to five minutes. Care must be taken to reduce the particle size to a size (approximately 2 micrometers) smaller than that of the shortest wave length to be scanned so as to minimize scattering effects. The appropriately ground sample is to be intimately mixed with spectroscopic grade potassium bromide and a sufficient amount of this mixture to produce a 1 mm thick, $^{1}/_{2}$-inch diameter disk is to be placed in an evacuable die. The die is to be placed under vacuum and a pressure of 10,000-15,000 psi is to be applied. The pressed disk is removed from the die and mounted in a spectrometer, and the infrared spectrum of the plastic is recorded.

(i) **Instrumentation.** The infrared spectrum from 2.0–15.0 micrometers (5000–667 cm^{-1}) of a given plastic is to be obtained on an optical double beam recording infrared spectrometer, having either a grating or sodium chloride prism dispersing element.

TABLE 12-72-3A—CAST-METAL ENCLOSURES

USE OR DIMENSIONS OF AREA INVOLVED	MINIMUM THICKNESS IN INCHES	
	Die-cast metal	Cast metal of other than the die-cast type
Area of 24 square inches or less and having no dimension greater than 6 inches	1/16	1/8
Area greater than 24 square inches or having any dimensions greater than 6 inches	3/32	1/8
At a threaded conduit hole	1/4	1/4
At an unthreaded conduit hole	1/8	1/8

TABLE 12-72-3B—SHEET METAL ENCLOSURES

MAXIMUM ENCLOSURE DIMENSIONS		MINIMUM THICKNESS OF SHEET METAL IN INCHES		COPPER, BRASS OR ALUMINUM
		Steel		
Any linear dimension in inches	Area of any surface in square inches	Coated	Uncoated	
12	90	0.035 (20)	0.031 (20)	0.045 (16)
24	360	0.046 (18)	0.042 (18)	0.058 (14)
48	1,200	0.057 (16)	0.053 (16)	0.075 (12)
60	1,500	0.070 (14)	0.067 (14)	0.095 (10)
Over 60	Over 1,500	0.097 (12)	0.093 (12)	0.122 (8)

TABLE 12-72-3C—THICKNESS OF GLASS COVERS

MAXIMUM SIZE OF OPENING		MINIMUM THICKNESS OF GLASS IN INCHES
Length or width in inches	Area in square inches	
4	16	1/16
12	144	1/8[1]
Over 12	Over 144	1

[1] One-eighth inch or more, depending upon the size, shape and mounting of the glass panel.

TABLE 12-72-3D—THICKNESS OF INSULATING MATERIAL

MAXIMUM DIMENSION IN INCHES	MAXIMUM AREA IN SQUARE INCHES	MINIMUM THICKNESS IN INCHES
24	360	$^{3}/_{8}$ [1]
48	1,152	$^{1}/_{2}$
48	1,728	$^{5}/_{8}$
Over 48	Over 1,728	$^{3}/_{4}$

[1] Material less than $^{3}/_{8}$ inch but not less than $^{1}/_{8}$ inch in thickness may be employed for a panel if the panel is adequately supported or reinforced to provide rigidity not less than that of a $^{3}/_{8}$-inch sheet. Material less than $^{1}/_{8}$ inch may be employed for subassemblies, such as supports for terminals for internal wiring, resistors and other components.

TABLE 12-72-3E—MINIMUM SPACINGS

POINT OF APPLICATION	MINIMUM SPACING—INCHES[1]		
	Voltage Range Volts	Through Air	Over Surface
To walls of enclosure			
Cast-metal enclosures	0–300	1/4	1/4
Sheet metal enclosures	0–300	1/2	1/2
Installation wiring terminals	0–30	1/8	3/16
With barriers—see Section 12-72-302 (t),	31–150	1/8	1/4
Item 6	151–300	1/4	3/8
Without barriers	0–30	3/16	3/16
	31–150	1/4	1/4
	151–300	1/4	1/8
Rigidly clamped assemblies[2]	0–30	1/32[3]	1/32[3]
100 volt-amperes maximum	0–30	3/64	3/64
Over 100 volt amperes	31–150	1/16	1/16
	151–300	3/32	3/32
Other parts	0–30	1/16	1/8
	31–150	1/8	1/4
	151–300	1/4	3/8

[1] Measurements are to be made with solid wire of adequate ampacity for the applied load connected to each terminal. In no case is the wire to be smaller than No. 18 AWG.

[2] Rigidly clamped assemblies include such parts as contact springs on relays or cam switches, printed wiring boards, etc.

[3] Spacings less than those indicated, but in no case less than 1/64 inch are acceptable for connection of integrated circuits and similar components where the spacing between the adjacent connecting wires on the component is less than 1/32 inch.

TABLE 12-72-3F—MAXIMUM TEMPERATURE RISES

DEVICE OR MATERIAL	DEGREES °C	DEGREES °F
1. Any point on rectifiers: A. Copper oxide B. Germanium C. Magnesium-copper sulphide D. Selenium E. Silicon	 30 50 95 50 75	 54 90 171 90 135
2. Rubber or thermoplastic insulation	35[1]	63[1]
3. Varnished cloth insulation	60	108
4. Fuses	65	117
5. Surfaces adjacent to or upon which the unit may be mounted in service	65	117
6. Wood or other combustible material	65	117
7. Fiber used as electrical insulation	65	117
8. Class A (Class 105) insulation	65[3]	117[3]
9. Class B (Class 130) insulation	85[3]	153[3]
10. Phenolic composition used as electrical insulation	125	225
11. Capacitors	40	72
12. Solid state devices (transistors, silicon-controlled rectifiers, etc.) integrated circuits	See[4]	
13. Wirewound resistor	150[2]	302[2]
14. Carbon resistor	See[4]	
15. Sealing compound	15	(27) less than the melting point[2]

[1] This limitation does not apply to an insulated conductor or a material which has been investigated and accepted for a higher temperature.

[2] These are limiting temperatures, not temperature rises.

[3] 10°C (18°F) higher on coil insulation if measured by the resistance method.

[4] The temperature of a solid-state device shall not exceed 50 percent of its rating during the normal standby condition. The temperature of a solid-state device shall not exceed 75 percent of its rated temperature under any other condition of operation of the complete unit which produces the maximum temperature dissipation of its components. For reference purposes 0°C (32°F) shall be considered as 0 percent. For integrated circuits the loading factor shall not exceed 50 percent of its rating under the normal standby condition and 75 percent under any condition of operation. Both solid-state components and integrated circuits may be operated up to the maximum ratings, under any one of the following conditions:

[4.1] All components comply with the requirements Mil-Std. 883C.

[4.2] A quality control program is established by the manufacturer consisting of inspection and test of 100 percent of all components, either on an individual basis, as part of a subassembly, or equivalent.

[4.3] Each assembled production unit is subjected to a burn in test while in an alarm condition for 24 hours while connected to a source of rated nameplate voltage and frequency in an ambient of at least 49°C (120°F) followed

by an operational test the maximum temperature on a carbon resistor shall be not greater than 50°C during the normal standby condition and not greater than 75°C during the alarm condition.

TABLE 12-72-3G—OBSCURATION—OPTICAL DENSITY CHART
(Based on a 5-foot light beam)

METER READING (Microamperes)	PERCENT PER FOOT OBSCURATION O_u	TOTAL OBSCURATION O_d	TOTAL OPTICAL DENSITY OD_t	OPTIC DENSITY PER FOOT OD_f
100.0	0.0000	0.0000	0.0000	0.0000
99.5	0.1002	0.5001	0.0022	0.0004
99.0	0.2008	1.0001	0.0044	0.0009
98.5	0.3019	1.5001	0.0066	0.0013
98.0	0.4033	2.0001	0.0088	0.0018
97.5	0.5051	2.5002	0.0110	0.0022
97.0	0.6074	3.0002	0.0132	0.0027
96.5	0.7101	3.5002	0.0155	0.0031
96.0	0.8132	4.0003	0.0177	0.0036
95.5	0.9167	4.5003	0.0200	0.0040
95.0	1.0227	5.0003	0.0223	0.0045
94.5	1.1251	5.5004	0.0246	0.0049
94.0	1.2300	6.0004	0.0296	0.0054
93.5	1.3353	6.5004	0.0292	0.0058
93.0	1.4410	7.0005	0.0315	0.0063
92.5	1.5473	7.5005	0.0339	0.0068
92.0	1.6539	8.0005	0.0362	0.0072
91.5	1.7611	8.5005	0.0386	0.0077
91.0	1.8687	9.0006	0.0410	0.0082
90.5	1.9768	9.5006	0.0434	0.0087
90.0	2.0853	10.0006	0.0458	0.0092
89.5	2.1944	10.5007	0.0482	0.0096
89.0	2.3039	11.0007	0.0506	0.0101
88.5	2.4139	11.5007	0.0531	0.0106
88.0	2.5244	12.0008	0.0555	0.0111
87.5	2.6355	12.5008	0.0580	0.0116
87.0	2.7470	13.0008	0.0605	0.0121
86.5	2.8590	13.5008	0.0630	0.0126
86.0	2.9716	14.0009	0.0655	0.0131
85.5	3.0847	14.5009	0.0680	0.0136
85.0	3.1984	15.0009	0.0706	0.0141
84.5	3.3125	15.5010	0.0732	0.0146
84.0	3.4272	16.0010	0.0757	0.0152
83.5	3.5425	16.5010	0.0783	0.0157
83.0	3.6583	17.0011	0.0809	0.0162
82.5	3.7746	17.5011	0.0836	0.0167
82.0	3.8916	18.0011	0.0862	0.0172
81.5	4.0091	18.5011	0.0889	0.0178
81.0	4.1271	19.0012	0.0915	0.0183
80.5	4.2458	19.5012	0.0942	0.0188
80.0	4.3651	20.0012	0.0969	0.0194

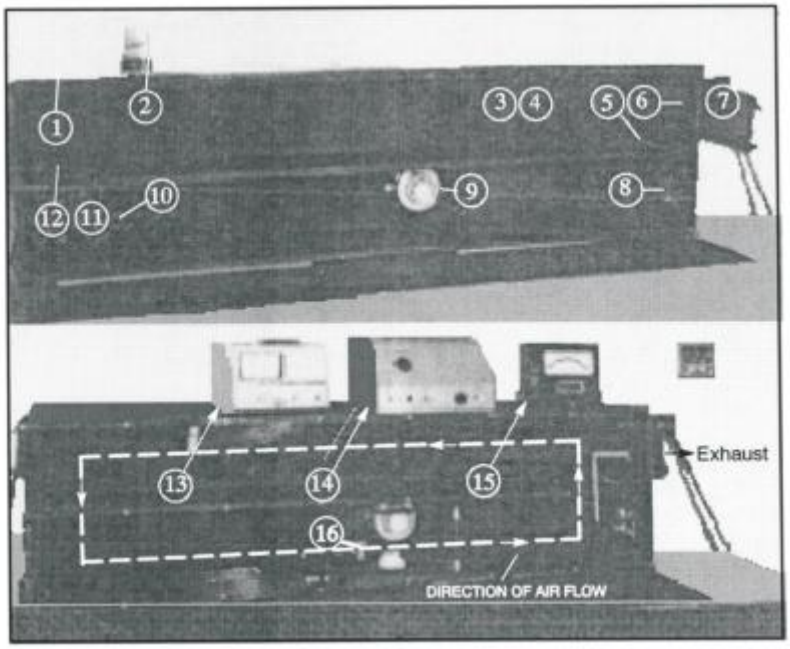

FIGURE 12-72-3-1—SMOKE DETECTOR TEST CHAMBER

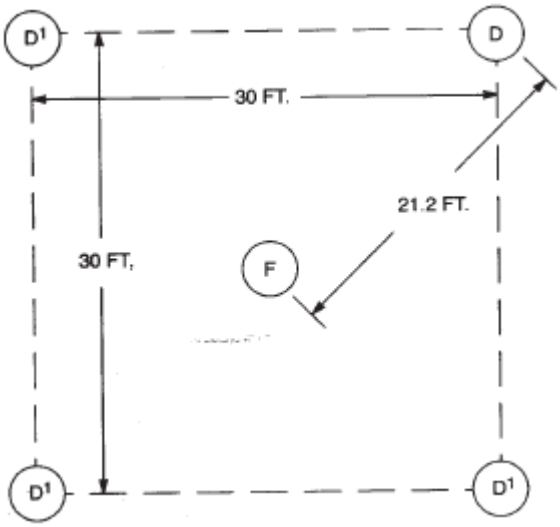

FIGURE 12-72-3-2—FIRE TEST DETECTOR INSTALLATION

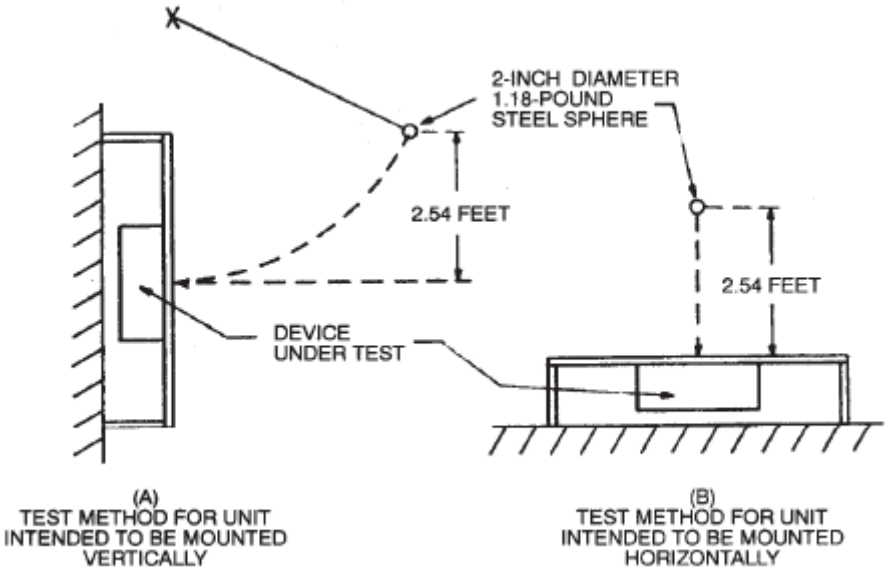

FIGURE 12-72-3-3—JARRING TEST

HISTORY NOTE APPENDIX

CALIFORNIA REFERENCED STANDARDS CODE
Title 24, Part 12, California Code of Regulations (CCR)

For prior code history, see the History Note Appendix to the
2010 Triennial Edition of the California Refernced Standards Code, effective January 1, 2011.

1. SFM 07-12 – Amendments to the 2010 California Referenced Standards Code, California Code of Regulations (CCR) Title 24, Part 12. Effective on January 1, 2014.