DSA Access Checklists

CHECKLIST TABLE OF CONTENTS

1 General Requirements

2 Site Requirements

3 Accessible Path of Travel

4 Accessible Parking, Passenger Loading, and Bus Stops

5 Curb Ramps and Pedestrian Crossings

6 Walks and Sidewalks

7 Accessible Ramps

8 Doors and Gates

9 Corridors, Hallways, and Vestibules

10 Stairs and Steps

11 Elevators and Areas of Rescue Assistance

12 Wheelchair Lifts

13 Public Telephones

14 Drinking Fountains

15 Sanitary Facilities

16 Alarms

17 Signage and Way-Finding

18 Assembly Use Areas

19 Business and Mercantile Use Areas

20 Educational Use Areas

21 Institutional Use Areas

22 Residential Use Areas

23 Other Use Areas

24 Qualified Historical Buildings

25 Specifications

© 2006 DSA/OUD

COMMONLY USED ABBREVIATIONS

ADA	Americans with Disabilities Act
ADA Stds	ADA Standards for Accessible Design as adopted by the US Department of Justice
ADAAG	Americans with Disabilities Act Accessibility Guidelines
ADACO	ADA-Coordinator
AFF	Above finished floor
ANSI	American National Standards Institute
ASME	American Society of Mechanical Engineers
ASTM	American Society for Testing and Materials
BHMA	Builders Hardware Manufacturers Association
C.T.P.	Contact third party
CA	California
CBC	California Building Code
CBSC Part 1	California Building Standards Administrative Code
CBSC	California Building Standards Code or Title 24 of the California Code of Regulations
CC	California Civil Code
CCR	California Code of Regulations
CEC	California Electrical Code
CESCC	California Elevator Safety Construction Code
CFC	California Fire Code
CFR	Code of Federal Regulations
CHBC	California Historical Building Code
cl	Center line
CMC	California Mechanical Code
CPC	California Plumbing Code
CRSC	California Reference Standards Code
DSA	Division of the State Architect
DSA-AC	DSA Access Compliance Section
D.A.	Designated accessible
Dept.	Department
DF	Drinking fountain
DGS	Department of General Services
DH	Department Head
Dims	Dimension, measurement
DOJ	U.S. Dept. of Justice
DSA	Division of the State Architect
DSA/AC	DSA Access Compliance Program
E.F.	Equivalent facilitation
Fig.	Figure
GC	California Government Code
H&SC	California Health and Safety Code
HQ	Headquarters
incl.	Including
ISA	International Symbol of Accessibility
IR	Interpretation of Regulations
Lab	Laboratory
Lav	Lavatory
lbs.	Pound
lf	Linear foot
Lib	Library
MAC	DSA/AC Program Manager
max	Maximum
min	Minimum
MOD	Modernization project
MoM	Method of mitigation
MOU	Memorandum of understanding
MP	Master priority
MRR	Men's restroom
N	No
N/A	Not applicable
N.A.R.	No action required
NFPA	National Fire Protection Association
NT	Non-typical
o.c.	On center
O/R	Official responsible
P.A.	Physical alteration
P.M.	Program modification
PRC	California Public Resources Code
PTD	Paper towel dispenser
Qty	Quantity
REF	Reference
req.	Requirement
RO	DSA Regional Office
ROM	Regional Office Manager
SD	Soap dispenser
sec.	Second (1/60 minute)
Sec.	Section
sf	Square foot
SFM	California State Fire Marshal
tbd	To be determined
Tbl.	Table
Title 24	Title 24 of the CCR
UBC	Uniform Building Code
UFAS	Uniform Federal Accessibility Standards
USAB	United States Access Board
u.o.n.	Unless otherwise noted
VC	California Vehicle Code
WC	Water closet
WRR	Women's restroom
Y	Yes
28 CFR 35	DOJ's Rule for ADA Title II
28 CFR 36	DOJ's Rule for ADA Title III
'	Foot
"	Inch
%	Percent
<	Less than
>	More than
≤	Less than or equal
≥	More than or equal

© 2006 DSA/OUD

1	Project designer (PD) shall address the following marked or circled items, and any additional plan review comments on drawings and specifications before scheduling a back check appointment for access compliance (AC). Any questions or points of disagreement must be resolved prior to back check by fax to plan reviewer (PR).	Justification / Reference or Code Citation	Headings / Comments / Notes & Examples

Check List 1. GENERAL REQUIREMENTS

GENERAL SUBMITTAL NOTES		
❑ Plans and specifications shall be sufficient to show extent of work. Plans that are incomplete will be returned prior to DSA approval. A construction document set may be considered for rejection by DSA for any of the following reasons: **1.** Excessive coordination errors (no more than ten per project). Civil, architectural, structural, mechanical, plumbing, landscaping, and electrical plans and specifications should be coordinated to match. **2.** Excessive, incompletely dimensioned details from site plan, floor plans, and interior elevations. **3.** Absence of coordinated signage schedule indicating the location and mounting height of signs. **4.** Absence of accessible parking plans and details indicating dimensioned clearances, slopes, transitions between materials, signage, and parking ratios. **5.** Modernization project site plans on which no path of travel is indicated to accessible toilets and area of new work. **6.** Incomplete plan set as indicated on the index sheet. **7.** Lacking application, check, plans or specifications. **8.** Assembly rooms without seating plans and details, no accessible seating locations with companion seating, or non-equitable lines of sight (includes stadiums and bleachers). **9.** Doors without all required clearances fully dimensioned. **10.** Missing details for ramps, curb cuts, transitions, elevators, stairs, lifts, thresholds, or cross slopes. **11.** Absence of dimensioned restroom plans enlarged to 1/4 inch scale and interior elevations with fixture locations and accessory mounting heights. **12.** Incomplete door schedule lacking: ▪ Size of doors ▪ Hardware groups ▪ Threshold details referenced ▪ Signage coordination (details referenced and copy) **13.** Assembly room plans which do not indicate assistive listening devices, as required, with signage.	CBSC Part 1, 4-317(b)2 & CBC 106.3.3	Information on plans and specifications
❑ Reviewer will review all items related to accessibility, provided by project designer (PD), in specifications and in plans, including floor plans, elevations, sections, and details, to make sure all construction work is accessible. For DSA policies, practices and procedures, go to the DSA website at: www.dsa.dgs.ca.gov	DSA Plan Check Procedures	
❑ Reviewer will review preliminary design meeting notes (prepared and submitted by PD).	DSA Plan Check Procedures	

© 2006 DSA/OUD

1	Project designer (PD) shall address the following marked or circled items, and any additional plan review comments on drawings and specifications before scheduling a back check appointment for access compliance (AC). Any questions or points of disagreement must be resolved prior to back check by fax to plan reviewer (PR).	Justification / Reference or Code Citation	Headings / Comments / Notes & Examples
	Check List 1. GENERAL REQUIREMENTS		
	GENERAL PLAN REVIEWER NOTES		
G.1	Provide the following for this element or area: **1.** Enlarged Plans **2.** Sections **3.** Elevations **4.** Details	CBSC Part 1 4-317(b)	Plans
G.2	Coordinate element(s) in architectural, structural, mechanical, plumbing, or electrical drawings (plans, sections, elevations, or details) with the one shown in this area.	CBSC Part 1 4-317(b)	Plans
G.3	Provide all sheets, sections, elevations, and details as indicated in plans.	CBSC Part 1 4-317(b)	Plans
G.4	Coordinate element(s) with specifications.	CBSC Part 1 4-317(b)	Plans
G.5	Indicate scale on drawing.	CBSC Part 1 4-317(b)	Plans
G.6	Provide missing dimension(s).	CBSC Part 1 4-317(b)	Plans
G.7	Update old code citation with current one.	CBSC Part 1 4-317(b)	Plans
G.8	Typical (applies to all similar situations in this project).	CBSC Part 1 4-317(b)	Plans
G.9	Provide absolute dimensions, not a range, in construction documents.	CBSC Part 1 4-317(b)	Plans
G.10	Provide enlarged plan or detail, showing all relevant dimensions to clearly indicate how accessibility requirements are met.	CBC 106.3.3.1 & CBSC Part 1 4-317(b)	Public schools Plans
G.11	Delete the term “handicap” and/or “H/C”. Use “accessible”, “ACC” for accessible, or “D.A.” for disabled access(ibility) instead.	Appendix B to 28 CFR 35.104 & VC §22511.9	Definitions Disabled person sign
G.12	Identified work, element, furniture, equipment, or layout, even though labeled NIC or provided by the owner, is integral to access compliance of this submittal. Specify dimensions and locations of work or element.	CBSC Part 1 4-317(b)	Plans
G.13	In new construction, additions, and in areas of alteration, full compliance must be provided.	CBSC Part 1 4-317(b)	Plans
G.14	PD may consider submitting a written application for unreasonable hardship to DSA and providing equivalent facilitation.	CBC 222 CBC 1102B	Definitions Definitions
G.15	Shown equivalent facilitation does not provide equal or greater accessibility and protection, as provided under federal law.	CBC 1102B & GC §4451(f)	Definitions Access to public buildings

© 2006 DSA/OUD

1	Project designer (PD) shall address the following marked or circled items, and any additional plan review comments on drawings and specifications before scheduling a back check appointment for access compliance (AC). Any questions or points of disagreement must be resolved prior to back check by fax to plan reviewer (PR).	Justification / Reference or Code Citation	Headings / Comments / Notes & Examples
	Check List 1. GENERAL REQUIREMENTS		
G.16	Bring manufacturer cut-sheets or product sample of specified element to back check.	DSA Plan Check Procedures	

© 2006 DSA/OUD

1	Project designer (PD) shall address the following marked or circled items, and any additional plan review comments on drawings and specifications before scheduling a back check appointment for access compliance (AC). Any questions or points of disagreement must be resolved prior to back check by fax to plan reviewer (PR).	Justification / Reference or Code Citation	Headings / Comments / Notes & Examples

Check List 1. GENERAL REQUIREMENTS

GENERAL REQUIREMENTS			
1.1	State and federal rules require, as do the statutes, that newly constructed facilities be readily accessible to and usable by individuals with disabilities. The phrase "readily accessible to and usable by individuals with disabilities" is a term that, in slightly varied formulations, has been used in the Architectural Barriers Act of 1968, the Fair Housing Act, the regulations implementing section 504 of the Rehabilitation Act of 1973, California's Government Code, and current accessibility standards. It means, with respect to a facility or a portion of a facility, that it can be approached, entered, and used by individuals with disabilities (including mobility, sensory, and cognitive impairments) easily and conveniently. A facility that is constructed to meet the requirements of the rules' accessibility standards will be considered readily accessible and usable with respect to construction. To the extent that a particular type or element of a facility is not specifically addressed by the standards, the language of this section is the safest guide.	GC §4450 & Appendix B of 28 CFR Part 36	Access to public buildings
1.2	Show list of all current codes, regulations, and adopted standards, which apply for the project:	CBSC Part 1 4-317(b)	Plans
	Applicable State Codes as of October 1, 2005 ❑ 2001 Building Standards Administrative Code, Part 1, CBSC ❑ 2001 California Building Code (CBC), Part 2, CBSC (1997 UBC, Volumes 1-3 & 2001 California Amendments) ❑ 2004 California Electrical Code (CEC), Part 3, CBSC (2002 National Electrical Code & 2004 California Amendments) ❑ 2001 California Mechanical Code (CMC), Part 4, CBSC (1997 Uniform Mechanical Code & 2001 California Amendments) ❑ 2001 California Plumbing Code (CPC), Part 5, CBSC (1997 Uniform Plumbing Code & 2001 California Amendments) ❑ 2001 California Elevator Code, Part 7, CBSC ❑ 2001 California Historical Building Code, Part 8, CBSC ❑ 2001 California Fire Code, Part 9, CBSC (1997 Uniform Fire Code & 2001 California Amendments) ❑ 2001 California Referenced Standards, Part 12, CBSC ❑ 1990 Title 19 C.C.R., Public Safety, SFM Regulations ❑ 2005 California Energy Code, Part 6, CBSC		
	List of Federal Codes and Standards (if applicable) ❑ Americans with Disabilities Act (ADA), Title II or Title III ❑ For Title II: Uniform Federal Accessibility Standards (UFAS) or ADA Standards for Accessible Design (ADAAG as published in Appendix A of 28 CFR Part 36). ❑ For Title III: ADA Standards for Accessible Design (ADAAG as published in Appendix A of 28 CFR Part 36)	28 CFR 35.151(c) 28 CFR 36.406	NOTE: Title II applies to projects funded and/or used by state and local government services. Title III covers public accommodations and commercial facilities. Depending on the use and funding, both titles may apply to a project.

1	Project designer (PD) shall address the following marked or circled items, and any additional plan review comments on drawings and specifications before scheduling a back check appointment for access compliance (AC). Any questions or points of disagreement must be resolved prior to back check by fax to plan reviewer (PR).	Justification / Reference or Code Citation	Headings / Comments / Notes & Examples
	Check List 1. GENERAL REQUIREMENTS		
	Partial List of Applicable Referenced Standards ❑ NFPA 13, Installation of Sprinkler Systems, 1999 Edition ❑ NFPA 72, National Fire Alarm Code (CA Amended) 1999 Edition (see UL Standard 1971 for "Visual Devices") ❑ Reference code section for NFPA Standards-CBC (SFM) 3504.1 ❑ ASME A17.1-2004 for Section 7-3094 Part 7, CBSC ❑ ASME A18.1-1999 for Section 7-3094 Part 7, CBSC ❑ ASTM FF1487-01e1 for Playground Equipment for Public Use ❑ ASTM F1292-04 for Impact Attenuation of Surfacing Materials within the Use Zone of Playground Equipment ❑ ANSI/BHMA A156.10-1999 American National Standard for Power Operated Pedestrian Doors ❑ ANSI A156.19-2002 American National Standard for Power Assist and Low Energy Power Operated Doors		
1.3	Provide list of code analysis data: construction type, area square footage, occupancy classification, occupancy load, and fire sprinklers, if applicable.	CBSC Part 1, 4-317	Plans, specs and other data
1.4	Describe the scope of work covered under this application. Identify the area, category, and type of project.		CATEGORIES OF PROJECTS: ▪ New construction ▪ Alteration w/o state funds ▪ Alteration w/ state funds ▪ Additions ▪ Relocatables ▪ HCD relocatables ▪ ADA-barrier removal ▪ Fire damage projects ▪ Historical properties ▪ MOU projects ▪ Housing ▪ Class size reduction ▪ Other
1.5	In order to clarify the scope of work, describe the relationship of this application with previous or upcoming projects at the same site and provide DSA application numbers for all buildings, paths of travel, parking, passenger loading zones, sanitary facilities, drinking fountains, signage, and public telephones on this site (e.g., increments, phases, ADA Transition Plan efforts, etc).	CBSC Part 1 4-317(b)	
1.6	Due to the difficulty of anticipating every unsatisfactory condition that might exist in connection with the existing facility where alteration work is proposed, the following clause or one of similar meaning must be included in the specifications or in the general notes: The intent of the drawings and specifications is to modify the facility for accessibility in accordance with Title 24, California Code of Regulations. Should any conditions develop not covered by the contract documents such that the finished work will not comply with said Title 24, California Code of Regulations, a change order detailing and specifying the required work shall be submitted to and approved by DSA-AC before proceeding with the work.	CBSC Part 1, 4-317	
1.7	Indicate whether the facility is a qualified historical building and provide details showing whether the alteration is using alternatives in compliance with California State Historical Building Code (see Checklist 24).	CBC 1135B.1	Historical preservation – General
1.8	Stamp or license of design professional is missing or expired, renew and stamp plans for back check.	CBSC Part 1 4-316(c)	Assumption of responsibility

1	Project designer (PD) shall address the following marked or circled items, and any additional plan review comments on drawings and specifications before scheduling a back check appointment for access compliance (AC). Any questions or points of disagreement must be resolved prior to back check by fax to plan reviewer (PR).	Justification / Reference or Code Citation	Headings / Comments / Notes & Examples
	Check List 1. GENERAL REQUIREMENTS		
1.9	For new construction projects: provide full accessibility to all areas of facilities or portions of facilities, including exterior routes of travel and all floors, including split levels, platforms, podiums, sunken areas, balconies, roof gardens, and mezzanines. Modify scoping of the project accordingly and indicate clearly on drawings how this requirement is being met. EXCEPTIONS: a. Floors or portions of floors not customarily occupied, including, but not limited to, non-occupiable or employee spaces accessed only by ladders, catwalks, crawl spaces, very narrow passageways, or freight (non-passenger) elevators, and frequented only by service personnel for repair or maintenance purposes: such spaces as elevator pits and elevator penthouses, piping and equipment catwalks, and machinery rooms. However, stair striping is required on all stairs.	GC §4450 CBC 1103B.1 & CBC 1127B.1	Access to public buildings Building accessibility - General Exterior routes of travel 28 CFR 35.130(b)(4): A public entity may not, in determining the site or location of a facility, make selections – (i) That have the effect of excluding individuals with disabilities from, denying them the benefits of, or otherwise subjecting them to discrimination; or (ii) That have the purpose or effect of defeating or substantially impairing the accomplishment of the objectives of the service, program, or activity with respect to individuals with disabilities.
1.10	For alteration, renovation, structural repair, or addition projects: provide full accessibility within the area of specific alteration. All proposed work must comply fully with the requirements for new construction (see Item 1.9, including exceptions). Scoping of the project shall be shown clearly on drawings indicating how this requirement is being met.	GC §4450 CBC 1134B.2	Access to public buildings Accessibility for existing buildings
1.11	In alteration, renovation, structural repair, or addition projects, the following elements, serving the specific area of alteration must be made accessible: **1.** A primary entrance to the building, facility, or exterior area that is being altered. **2.** A primary path of travel to the specific area of alteration, including: a path of travel from the site entry point (at the public right-of-way) that is closest to public transportation stops; a path of travel from on-site transportation stops; designated accessible parking; a path of travel from designated accessible parking; and identifying and directional signage. **3.** Sanitary facilities serving the area. **4.** Drinking fountains serving the area. **5.** Signage. **6.** Public telephones serving the area.	CBC 1134B.2.1	Accessibility for existing buildings <u>DEFINITIONS:</u> ALTERATION: Any change, addition, or modification in construction or occupancy or structural repair or change in primary function to an existing structure other than repair or addition. ADDITION: An extension or increase in floor area or height of a building or structure.

© 2006 DSA/OUD

1	Project designer (PD) shall address the following marked or circled items, and any additional plan review comments on drawings and specifications before scheduling a back check appointment for access compliance (AC). Any questions or points of disagreement must be resolved prior to back check by fax to plan reviewer (PR).	Justification / Reference or Code Citation	Headings / Comments / Notes & Examples
	Check List 1. GENERAL REQUIREMENTS		
1.12	Modify scoping of the project and all related drawings to indicate clearly how scoping requirements are being met.	CBSC Part 1 4-317(b)	Plans
	EXCEPTIONS:		
	a. Alteration Projects below the Cost Cap:	CBC 1134B.2.1	Accessibility for existing buildings Exception 1
	When the total construction cost of alterations is less than $113,586.07 (in 2006), and DSA finds that full compliance creates an unreasonable hardship, and equivalent facilitation is provided, compliance shall be limited to the actual alteration work.		NOTE: Exception (a) is based on the January, 2005 ENR Index and will be updated annually (January). See ww.dsa.dgs.ca.gov/UniversalDesign/ud_threshold.htm
	An unreasonable hardship exists where the cost of providing an accessible entrance, path of travel, sanitary facilities, public phones and drinking fountains, exceeds 20% of the cost of the project without these features. In such a case, access must be provided to the extent that it can be without incurring disproportionate cost (up to 20%).		
	PD must apply for unreasonable hardship in writing and provide construction history for this site for the previous three years, and construction cost documentation.	CBC 222 & GC §4451(f)	Definitions Access to public buildings
	When scoping the project, priority should be given to those elements that will provide the greatest access in the following order: 1. An accessible entrance. 2. An accessible path of travel (POT) to the altered area. 3. At least one accessible restroom of each type for each sex serving the area of alteration. 4. Accessible telephones. 5. Accessible drinking fountains. 6. Additional accessible elements.		
	b. Barrier Removal Projects		
	Alterations that are limited to the removal of architectural barriers are not subject to the accessibility requirements in CBC 1134B.2.1. Exception 3 of section 1134B.2.1 is not intended to relieve projects from complying with all applicable provisions within the specific area of alteration.	CBC 1134B.2.1 - Exception 3	Accessibility for existing buildings NOTE: Exception (b) does not apply to facilities for which construction started after January 26, 1992.
	c. Other Alteration Projects		
	Alteration projects that consist only of heating, ventilation, air conditioning; re-roofing; electrical work not involving placement of switches and receptacles; cosmetic work (e.g. painting, carpeting) that does not affect items regulated by the CBSC, etc. are not considered alterations for the purpose of accessibility and are not subject to the accessibility requirements in CBC 1134B.2.1.	CBC 1134B.2.1 - Exception 4	Accessibility for existing buildings
	Exception 4 of CBC 1134B.2.1 is not intended to relieve projects from complying with other applicable provisions of the CBC (e.g., replacement of carpet does not activate the		

Check List 1. GENERAL REQUIREMENTS

		Justification / Reference or Code Citation	Headings / Comments / Notes & Examples
	provisions of this section; however, the new carpet still must comply with CBC 1124B.3). PD must provide information related to applicable accessibility requirements for all planned elements and features in the specific area of alteration.		
	d. Alteration Projects with Department of Education (CDE) or Office of Public School Construction (OPSC) Funding Alteration projects that are wholly or in part funded by CDE or OPSC, and which consist only of heating, ventilation, air conditioning; re-roofing; electrical work not involving placement of switches and receptacles; cosmetic work (e.g. painting, carpeting) that does not affect items regulated by the CBSC, etc. are not considered alterations for the purpose of accessibility and are not subject to the accessibility requirements in CBC 1134B.2.1. However, OPSC makes an additional 3% of funding available for Access and Fire-Life-Safety beyond the building envelope, plus provides an allocation for required elevators.	CBC 1134B.2.1 - Exception 4	Accessibility for existing buildings
	Scoping of the project and all drawings shall indicate clearly how this requirement is met. Provide cost documentation.	CBSC Part 1 4-317(b) &	Plans
1.13	Special requirements for school modernization projects: **1.** Provide information related to the project consistent with the district's ADA Transition Plan for the facilities. **2.** If elevators are required by DSA in writing at preliminary phase, partial funding for elevator can be granted by OPSC, in addition to the basic funding package.	CBSC Part 1 4-317(b)	Plans
	3. Alteration projects under $30,407 (in 2005) need not be submitted to DSA, however, all work must be code-compliant. Also, projects between $30,407 and $121,628 may not require DSA review when specific conditions are met.	CBSC Part 1, 4-308 4-308 CBSC Part 1 4-309 DSA-IR A-10	Reconstruction or alterations not in excess of $25,000 in cost Reconstruction or alterations in excess of $25,000 in cost Reconstruction and alteration projects – Exemption from DSA approval NOTE: Cost threshold is based on the January, 2005 ENR Index and will be updated annually.
1.14	Provide the following note on drawings for projects that include deferred approval items for access related equipment or elements: "Installation of deferred approval items shall not be started until contractor's drawings, specifications and engineering calculations for the actual systems to be installed have been accepted and signed by the Architect or Structural Engineer and approved by DSA."	CBSC Part 1 4-317(b)	Plans
1.15	Charter schools must submit plans to DSA for approval.	CBC 101.17.11 #4.1	Enforcing agency

Return to TOC

2	Project designer (PD) shall address the following marked or circled items, and any additional plan review comments on drawings and specifications before scheduling a back check appointment for access compliance (AC). Any questions or points of disagreement must be resolved prior to back check by fax to plan reviewer (PR).	Justification / Reference or Code Citation	Headings/ Comments / Notes / & Examples
	Check List 2. SITE REQUIREMENTS		
2.1	New construction: All proposed site work, including choice of location, site development and grading, must be designed to provide access to all new building entrances and exterior ground–floor exits, access to normal routes, and where necessary to provide access, shall incorporate pedestrian ramps, curb ramps, etc. When more than one building or facility is located on a site, an accessible route of travel shall be provided between all buildings and accessible site facilities. The accessible route of travel shall be the most practical direct route between accessible building entrances, accessible site facilities and the accessible entrance to the site. Where more than one route of travel is provided, all routes shall be accessible. EXCEPTION: Where DSA/AC determines that compliance with this requirement would create an unreasonable hardship because of topography, natural barriers, etc., an exception may be granted when equivalent facilitation is provided through the use of other methods and materials.		28 CFR 35.130(b)(4): A public entity may not, in determining the site or location of a facility, make selections – (i) That have the effect of excluding individuals with disabilities from, denying them the benefits of, or otherwise subjecting them to discrimination; or (ii) That have the purpose or effect of defeating or substantially impairing the accomplishment of the objectives of the service, program, or activity with respect to individuals with disabilities.
2.2	Alterations and additions: All proposed work must comply fully with the requirements for new construction (see Checklist Item 2.1). EXCEPTIONS: a. Where DSA/AC determines that compliance with this requirement would create an unreasonable hardship because of topography, natural barriers, etc., an exception may be granted when equivalent facilitation is provided through the use of other methods and materials. b. The requirements do not apply in those conditions where DSA determines that, due to legal or physical constraints, the site of the project would not allow compliance with this requirement or equivalent facilitation without creating an unreasonable hardship.	CBC 1134B.2 CBC 101.17.11 #4, & CBC 1127B.1	General Enforcing agency Exterior routes of travel - General NOTE: Jurisdictional findings and determinations are subject to an internal DSA appeals process.
2.3	The site is an important part of a building or facility, and the PD must ensure that buildings or facilities can be approached and entered easily and conveniently. Site plans shall meet the following requirements: **1.** Use larger scale to more clearly show relevant elements. **2.** Change graphic layout and/or line weights and types to better represent access compliance. **3.** Provide names and/or designations for all existing buildings. **4.** Provide and indicate DSA application numbers for all existing buildings affected by project scope. Alterations are not permitted to previously uncertified construction.	CBSC Part 1 4-317(b)	Plans NOTE: Call DSA's Regional Office Supervisor for information on the certification process of existing buildings without a DSA application number.

© 2006 DSA/OUD

2	Project designer (PD) shall address the following marked or circled items, and any additional plan review comments on drawings and specifications before scheduling a back check appointment for access compliance (AC). Any questions or points of disagreement must be resolved prior to back check by fax to plan reviewer (PR).	Justification / Reference or Code Citation	Headings/ Comments / Notes / & Examples
	Check List 2. SITE REQUIREMENTS		
2.4	Indicate the following infrastructure on site plan:	CBSC Part 1 4-317(b)	Plans
	1. Location of all sanitary facilities on site.	CBC 1115B	Bathing and toilet facilities
	A. Identify all sanitary facilities that are part of the project and provide DSA application number for existing sanitary facilities that were previously upgraded.		
	B. Identify all existing sanitary facilities.		
	C. Identify type of use (men's, women's, or unisex; single or multi accommodation; employee, public, student, kindergarten, or visitor).		
	D. Prior to back check, PD must field verify and indicate on plans compliance status with current standards of sanitary facilities serving the areas of construction. Fully complaint sanitary facilities should be identified as "accessible". Identified barriers that do not comply with current standards must be removed under this application or PD must file for unreasonble hardship.	CBC 1134B.2.1 & CBC 106.3.3 & CBSC, Part 1, 4-316(e) & CBC 222	Existing buildings Information on plans Designation of Responsibilities Unreasonable hardship
	2. Location of all on-site and associated off-site parking and passenger drop-off and loading zones.	CBC 1129B & CBC 1131B	Accessible parking required Passenger drop-off and loading zones
	A. Provide parking ratio for all parking, indicating number of regular, accessible, van-accessible, and total spaces. Calculate each lot/area separately.		
	B. Identify type of use (regular, accessible, or van-accessible; employees, students, or visitors), and provide DSA application number for existing parking and passenger zones that were previously upgraded.		
	C. Identify all accessible parking spaces and passenger drop-off zones that are part of the project.		
	D. Indicate 5' min wide access aisles adjacent to each accessible parking stall and 8' min wide access aisles on the passenger side of all van accessible parking stalls.		
	E. Indicate location of accessible parking stall and "Tow-away" signage.		
	F. Prior to back check, PD must field verify and indicate on plans compliance status with current standards of accessible parking and passenger zones serving the areas of construction. Fully complaint accessible parking and passenger zones should be identified as "accessible". Identified barriers that do not comply with current standards must be removed under this application or PD must file for unreasonble hardship.	CBC 1134B.2.1 & CBC 106.3.3 & CBSC, Part 1, 4-316(e) & CBC 222	Existing buildings Information on plans Designation of Responsibilities Unreasonable hardship
	3. Location of all drinking fountains on site.	CBC 1117B.1 & CBSC Part 1 4-317(b)	Drinking fountains Plans
	A. Identify all drinking fountains that are part of the project and provide DSA application numbers for existing drinking fountains that were previously upgraded.		
	B. Identify all existing drinking fountains.		
	C. Identify type of use (single, multi, or hi-low unit; adult or children's height).		

2	Project designer (PD) shall address the following marked or circled items, and any additional plan review comments on drawings and specifications before scheduling a back check appointment for access compliance (AC). Any questions or points of disagreement must be resolved prior to back check by fax to plan reviewer (PR).	Justification / Reference or Code Citation	Headings/ Comments / Notes / & Examples
Check List 2.	**SITE REQUIREMENTS**		
	D. Prior to back check, PD must field verify and indicate on plans compliance status with current standards of drinking fountains serving the areas of construction. Fully compliant drinking fountains should be identified as "accessible". Identified barriers that do not comply with current standards must be removed under this application or PD must file for unreasonble hardship.	CBC 1134B.2.1 & CBC 106.3.3 & CBSC, Part 1, 4-316(e) & CBC 222	Existing buildings Information on plans Designation of Responsibilities Unreasonable hardship
4.	Location of all public telephones. A. Identify all public telephones that are part of the project. B. Identify all existing public telephones and provide DSA application numbers for existing public telephones that were previously upgraded.	CBC 1117B.2 & CBSC Part 1 4-317(b)	Telephones Plans
	C. Prior to back check, PD must field verify and indicate on plans compliance status with current standards of public telephones serving the areas of construction. Fully compliant public telephones should be identified as "accessible". Identified barriers that do not comply with current standards must be removed under this application or PD must file for unreasonble hardship.	CBC 1134B.2.1 & CBC 106.3.3 & CBSC, Part 1, 4-316(e) & CBC 222	Existing buildings Information on plans Designation of Responsibilities Unreasonable hardship
5.	Location of all ramps. A. Identify type of ramp (exterior, interior, covered ramp; curb ramp, built-up curb ramp). B. Identify all ramps that are part of the project and provide DSA application number for all ramps that were previously upgraded. C. Identify all existing ramps and indicate length, width, landings and slope. D. Indicate any slopes in the accessible route of travel that exceed 1:20 (5%) with an arrow, starting at the top of the ramp run and ending at the bottom of the ramp run.	CBC 1127B.5, 1133B.5 & CBSC Part 1 4-317(b)	Curb Ramps Ramps Plans
	E. Prior to back check, PD must field verify and indicate on plans compliance status with current standards of ramps serving the areas of construction. Fully compliant ramps should be identified as "accessible". Identified barriers that do not comply with current standards must be removed under this application or PD must file for unreasonble hardship.	CBC 1134B.2.1 & CBC 106.3.3 & CBSC, Part 1, 4-316(e) & CBC 222	Existing buildings Information on plans Designation of Responsibilities Unreasonable hardship
6.	Location of all stairs. A. Identify type of stairs (exterior, interior, covered stairs). B. Identify all stairs that are part of the project. C. Identify all existing stairs and provide DSA application numbers for all stairs that were previously upgraded. D. Indicate stairs or steps with arrow and label with direction. Specify details where applicable.	CBC 1133B.4 & CBSC Part 1 4-317(b)	Stairways Plans
7.	Location of all elevators and lifts. A. Identify type and provide DSA application number for all elevators or lifts that were previously upgraded. B. Identify all elevators or lifts that are part of the project.	CBC 1116B & CBSC Part 1 4-317(b)	Elevators and special access lifts Plans

2	Project designer (PD) shall address the following marked or circled items, and any additional plan review comments on drawings and specifications before scheduling a back check appointment for access compliance (AC). Any questions or points of disagreement must be resolved prior to back check by fax to plan reviewer (PR).	Justification / Reference or Code Citation	Headings/ Comments / Notes / & Examples
	Check List 2. SITE REQUIREMENTS		
	C. Prior to back check, PD must field verify and indicate on plans compliance status with current standards of elevators and lifts serving the areas of construction. Fully complaint elevators and lifts should be identified as "accessible". Identified barriers that do not comply with current standards must be removed under this application or PD must file for unreasonble hardship.	CBC 1134B.2.1 & CBC 106.3.3 & CBSC, Part 1, 4-316(e) & CBC 222	Existing buildings Information on plans Designation of Responsibilities Unreasonable hardship
2.5	Clearly delineate all accessible routes of travel by a dashed or dotted line (▪ ▪ ▪ ▪) on site plans. See Checklist 3 for additional accessible routes of travel requirements.	CBSC Part 1 4-317(b)	Plans
2.6	Provide the following note on site plan: Accessible route of travel as indicated on plan is a barrier-free access route without any abrupt level changes exceeding 1/2" if beveled at 1:2 max slope, or vertical level changes not exceeding 1/4" max and at least 48" in width. Surface is stable, firm, and slip resistant. Cross slope does not exceed 2% and slope in the direction of travel is less than 5%, unless otherwise indicated. Accessible route of travel shall be maintained free of overhanging obstructions to 80" minimum and protruding objects greater than 4" projection from wall and above 27" and less than 80". Architect shall verify that there are no barriers in the route of travel.	CBSC Part 1 4-317(b)	Plans
2.7	Coordinate civil drawings with architectural drawings.	CBSC Part 1 4-317(b)	Plans
2.8	Provide relevant spot elevations along the accessible route of travel on site plan. At a minimum, show elevations at: **1.** Interior finished floor of buildings. **2.** Exterior entrance door landings. **3.** Along sloped walks in intervals of 100 ft max. **4.** Site entry points. **5.** Ramp landings (top, bottom, intermediate). **6.** Curb ramps (top, bottom). **7.** Elevator landings. **8.** Accessible parking and passenger drop-off zones. **9.** Drinking fountains. **10.** Exterior side of counters.	CBSC Part 1 4-317(b)	Plans
2.9	Specify all surface materials (existing and new) along and adjacent to the accessible route of travel. Separate different surface areas by lines.	CBSC Part 1 4-317(b)	Plans
2.10	Identify all level changes between materials which exceed 1/4" vertical or 1/2" (if beveled at 1:2) in height along and adjacent to the accessible route of travel.	CBC 1133B.7.4 & CBSC Part 1 4-317(b)	Changes in level Plans

2	Project designer (PD) shall address the following marked or circled items, and any additional plan review comments on drawings and specifications before scheduling a back check appointment for access compliance (AC). Any questions or points of disagreement must be resolved prior to back check by fax to plan reviewer (PR).	Justification / Reference or Code Citation	Headings/ Comments / Notes / & Examples
	Check List 2. SITE REQUIREMENTS		
2.11	Indicate all ground floor entries/exits that are required to be accessible. 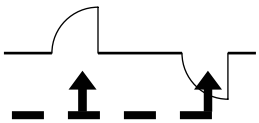	CBSC Part 1 4-317(b)	Plans
2.12	Indicate all existing and proposed curb cuts or curb ramps that are in the accessible route of travel. If new, specify details. If existing, indicate conditions (slope, width, landings) to show compliance status. Below are two acceptable examples. 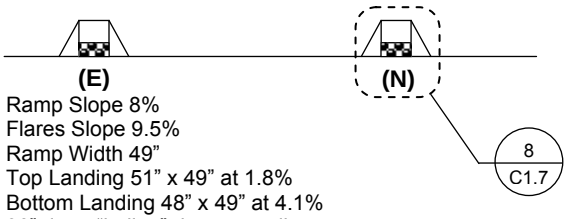 Ramp Slope 8% Flares Slope 9.5% Ramp Width 49” Top Landing 51” x 49” at 1.8% Bottom Landing 48” x 49” at 4.1% 36” deep “in-line” domes, no lip	CBSC Part 1 Title 24, 4-317(b) & CBC 1127B.5	Plans Curb ramps
2.13	Indicate warning curbs and tactile/visual indicators and specify detail.	CBC 1133B.8	Hazards
2.14	Where gates are within the accessible route of travel, indicate how gate will be used: Specify lever hardware and smooth surface at bottom 10” of gate (e.g. kick plate).	CBC 1133B.1.1.1.4	Gates
	1. If gate is used as exit only, it must comply with exit door requirements (panic hardware and exit signs may be required to coordinate with Fire & Life Safety).	CBC 1003.3.2	Means of egress components - Gates
	2. In existing facilities, if an existing gate is used as entrance and exit, it must comply with exit door and general door requirements (panic hardware and exit signs may be required to coordinate with Fire & Life Safety). Specify door schedule number and detail (landings, hardware, kick-plate, strike edge clearance, clear opening).	CBC 1133B.1.1.1.4 & CBC 1003.3.2	Gates Gates
2.15	Indicate locations of all exterior directional signs and specify detail.	CBC 1127B.3	Exterior routes of travel - Signs
2.16	Provide enlarged plan of required element or area containing site requirement(s) in 1/4" scale.	CBSC Part 1 Title 24, 4-317(b)	Plans

© 2006 DSA/OUD

3	Project designer (PD) shall address the following marked or circled items, and any additional plan review comments on drawings and specifications before scheduling a back check appointment for access compliance (AC). Any questions or points of disagreement must be resolved prior to back check by fax to plan reviewer (PR).	Justification / Reference or Code Citation	Headings / Comments / Notes & Examples
	Check List 3. ACCESSIBLE ROUTE OF TRAVEL		
3.1	For additional scoping requirements and exceptions see also applicable **DSA/AC Checklist 1** and **Checklist 2**.		
3.2	The accessible route of travel must, to the maximum extent feasible, coincide with the route for the general public.	CBC 1114B.1.2	Accessible route of travel
3.3	Indicate the accessible route of travel (dashed or dotted line) from and to the following areas (if necessary, modify scoping of the project accordingly and indicate clearly on drawings how this requirement is met):	CBSC Part 1 4-317(b)	Plans
	1. From public transportation stops and cross walks in the public rights-of-way serving the area adjacent to a site entry point.	CBC 217-P & CA Streets and Highways Code §5610	Definitions – Path of Travel For code, see: www.leginfo.ca.gov NOTE: The PD must clearly demonstrate and document an effort in requesting that the entity having authority (or control) over the public right-of-way (such as a city or a county) provide the necessary improvements / alterations needed to comply with accessibility. If such request is denied by the entity having authority (or control) over the public right-of-way, that denial must be documented and entered into the DSA project file.
	2. From all appropriate site entry points that serve pedestrians (e.g., public transportation stops, cross walks, etc.) to the area of new construction or alteration, starting at the property line.		
	3. From accessible parking serving the area to the area of new construction or alteration.		
	4. From passenger drop-off and loading zones to the area of new construction or alteration.		
	5. From visitor arrival or sign-in points to the area of new construction or alteration.		
	6. From accessible restrooms serving the area to the area of new construction or alteration.		
	7. From drinking fountains serving the area to the area of new construction or alteration.		
	8. From public telephones serving the area to the area of new construction or alteration.		
	9. From and to elevators serving the site's accessible route.		
	10. From exterior activity areas serving the area (e.g., plazas, playgrounds, vista points, etc.) to the area of new construction or alteration.		
	11. From all other essential function areas serving the area to the area of new construction or alteration.		
	12. Between all areas of new construction or alteration.		
3.4	Indicate width of accessible route of travel at this location:		
	1. 48" min for walks and sidewalks. See Checklist 6 for exceptions and additional requirements.	CBC 1133B.7.1 CBC 1003.2.3.1	Continuous surface Width - General
	2. 48" min for curb ramps. See Checklist 5 for exceptions and additional requirements.	CBC 1127B.5 #2	Width of curb ramps
	3. 48" min for ramps, or 60" min if serving an occupancy load of >300 and the entrance ramp is the only exit discharge path from a building. See Checklist 7 for exceptions and additional requirements.	CBC 1133B.5.2	Entrance and special occupancy
	4. 36" min for corridors, hallways, and exterior exit balconies if serving an occupancy load of <10, or 44" min if serving	CBC 1133B.3.1 & CBC 1133B.3.2	Corridor and hallway widths Corridors and hallways over 200'

Project designer (PD) shall address the following marked or circled items, and any additional plan review comments on drawings and specifications before scheduling a back check appointment for access compliance (AC). Any questions or points of disagreement must be resolved prior to back check by fax to plan reviewer (PR).	Justification / Reference or Code Citation	Headings / Comments / Notes & Examples

Check List 3. ACCESSIBLE ROUTE OF TRAVEL

an occupancy load of 10 or more. See Checklist 9 for exceptions and additional requirements.		
5. For corridors, hallways, and exterior exit balconies exceeding 200' in length, provide 60" min clear width or 60"x60" passing space at reasonable intervals of 200' or less. A T-shaped intersection of two 36" min width corridors is an acceptable alternate passing space. See Checklist 9 for exceptions and additional requirements.		
6. 44" min within a multi-accommodation toilet room to and from accessible compartments.	CBC 1115B.7.1 #4	Toilet facilities – Compartment doors
7. 36" min within a single-accommodation toilet room except at doors. If a person in a wheelchair must make a turn around an obstruction, the min clear width of the accessible route shall be as shown in CBC Figure 11B-5E.	CBC 1115B.7.2	Single-accommodation toilet facilities
8. 36" min at aisles serving one side only.	CBC 1133B.6.2	Aisles - Width
9. 44" min at aisles serving both sides.	CBC 1133B.6.2	Aisles - Width
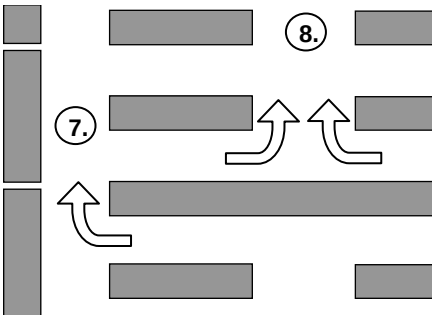 For turns around an obstruction, see 3.6.		NOTE: Chapter 10 may require 44" min aisle width in B and M occupancies, and in assembly occupancies without fixed seating, where seats, tables, furnishings, displays, and similar fixtures or equipment are located on both sides of the aisle.
10. 36" min at aisles in A (without fixed seating), B, and M occupancies if seats, tables, furnishings, displays and similar fixtures or equipment are located on only one side of the aisle.	CBC 1004.3.2.2 #2	Aisles - Width in occupancies without fixed seats
11. 44" min at aisles in A (without fixed seating), B, and M occupancies if seats, tables, furnishings, displays and similar fixtures or equipment are located on both sides of the aisle.	CBC 1004.3.2.2 #2	Aisles - Width in occupancies without fixed seats
3.5 Doors (in any position) shall not reduce the required width of a corridor or hallway more than 50%.	CBC 1004.3.3.2 & CBC 1004.3.4.2	Hallways - Width Corridors - Width

© 2006 DSA/OUD

3	Project designer (PD) shall address the following marked or circled items, and any additional plan review comments on drawings and specifications before scheduling a back check appointment for access compliance (AC). Any questions or points of disagreement must be resolved prior to back check by fax to plan reviewer (PR).	Justification / Reference or Code Citation	Headings / Comments / Notes & Examples

Check List 3. ACCESSIBLE ROUTE OF TRAVEL

3.6	Provide and indicate the following dimensions when the accessible route changes direction or turns around an obstruction:	ADA Stds. 4.3.3	Accessible Route – Width
	1. 90 degree turns can be made from a 36” wide passageway into another 36” passageway if the depth of the obstruction is 48” or greater on the inside dimensions of the turn.	ADA Stds. 4.3.3	Accessible Route – Width
	2. U-turns around an obstruction less than 48” wide can be made if the passageway width is 42” min and the base of the U-turn space is 48” min wide.	ADA Stds. 4.3.3	Accessible Route – Width
	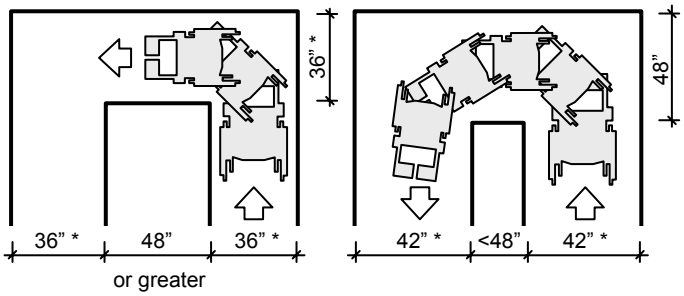		*NOTE: If occupancy load is 10 or more, the min width of all * dimensions must be increased to 44” min.
	EXCEPTIONS: a. At doors.		
3.7	Provide and indicate the following properties for the accessible route of travel:		
	1. Accessible route and adjacent areas must be designed so that water will not accumulate on walking surfaces.	CBC 1133B.7.1 CBC 1124B.1	Continuous surface Ground and floor surfaces
	2. Accessible route surface must be slip-resistant, stable, and firm.	CBC 1133B.7.1 CBC 1124B.1	Continuous surface Ground and floor surfaces
	3. On surfaces with slopes up to 6%, provide equivalent of medium salted finish.	CBC 1133B.7.1.1	Slopes less than 6 percent
	4. On surfaces with slopes equal to or greater than 6%, provide slip-resistant finish.	CBC 1133B.7.1.2	Slopes 6 percent or greater
3.8	All entrances and ground floor exits must be accessible.	CBC 1133B.1.1.1.1	Entrances
	EXCEPTIONS: a. Exterior ground–floor exits serving smoke–proof enclosures, stairwells and exit doors servicing stairs only.		
	b. Exits in excess of those required by Section 1114B.2.1, and which are more than 24 inches above grade. Such doors shall have visual sign which indicates, by means of an arrow and/or text, the location of the nearest accessible exit. The warning sign shall comply with Section 1117B.5 and be mounted at a location so steps do not need to be retraced.		
	c. In existing buildings where the enforcing agency determines that compliance with the building standards of this section would create an unreasonable hardship, an		NOTE: Jurisdictional findings and determinations are subject to an internal DSA appeals process.

	Project designer (PD) shall address the following marked or circled items, and any additional plan review comments on drawings and specifications before scheduling a back check appointment for access compliance (AC). Any questions or points of disagreement must be resolved prior to back check by fax to plan reviewer (PR).	Justification / Reference or Code Citation	Headings / Comments / Notes & Examples
	Check List 3. ACCESSIBLE ROUTE OF TRAVEL		
	exception shall be granted when equivalent facilitation is provided. Equivalent facilitation would require at least one entrance to be accessible to and usable by persons with disabilities.		
	d. In existing buildings when legal or physical constraints will not allow compliance or equivalent facilitation without creating an unreasonable hardship.		
3.9	Indicate on plans all entrances and ground floor exits that are required to be accessible (either by extending the accessible route of travel line into the building or by a symbol (e.g., ►). Provide strike edge and landing dimensions for each entrance on plan or provide the following general note on plan:	CBSC Part 1 4-317(b)	Plans
	▪ All exterior entrances and exits identified with a triangular symbol (►) on this plan are accessible and comply with CBC 1133B.1.1, including:		
	A. 32” clear opening;	CBC 1133B.1.1.1.1	Entrances
	B. Required strike edge clearance at pull side of door (24” for front and latch, 36” for hinge approach);	CBC 1133B.2.4.2	Maneuvering clearances at doors
	C. Level landings (2% max).	CBC 1133B.2.4.2	Maneuvering clearances at doors
	D. Accessible threshold, hardware, closer, kick-plate;	CBC 1133B.2.4.1 CBC 1133B.2.5.1 CBC 1133B.2.5.2 CBC 1133B.2.6	Thresholds Door closer Smooth surface
	E. ISA on exterior side of entrance;	CBC 1117B.5.8.1.2	Entrance signs
	F. Tactile exit signage on interior side of exit door, as required.	CBC 1003.2.8.6.1 #4	Tactile exit signage – Where required
	G. Outline of canopy, awning, or roof.	CBSC Part 1 4–317(b)	Plans
3.10	Vertical change in the accessible route cannot exceed 1/4”. Provide curb ramp, ramp, elevator, platform lift, or remove element at this location, or provide equally convenient, alternative accessible route.	CBC 1124B.2	Changes in level
3.11	Level change in the accessible route between 1/4” and 1/2" must be beveled at 1:2 max slope. Provide curb ramp, ramp, elevator, platform lift, or provide equally convenient, alternative accessible route.	CBC 1124B.2 & CBC 1133B.7.4	Changes in level Changes in level <u>NOTE:</u> Thresholds over 1/2" must be mitigated by a ramp/sloped walk.
3.12	If level change between pedestrian area and adjacent surface exceeds 30” in height, specify and provide detail for guardrail (42” AFF).	CBC 1133B.5.7.2	Guardrails – Where required

© 2006 DSA/OUD

3	Project designer (PD) shall address the following marked or circled items, and any additional plan review comments on drawings and specifications before scheduling a back check appointment for access compliance (AC). Any questions or points of disagreement must be resolved prior to back check by fax to plan reviewer (PR).	Justification / Reference or Code Citation	Headings / Comments / Notes & Examples

Check List 3. ACCESSIBLE ROUTE OF TRAVEL

3.13	Indicate condition of level change between pedestrian area and adjacent surface. If drop exceeds 1/4” in height, specify and provide one of the following details:	CBSC Part 1 4-317(b)	Plans
	1. Abrupt vertical drops between 1/4" and 4”.	CBC 1133B.8.1	Warning curbs
	2. 6” high warning curb if vertical drop exceeds 4”.	CBC 1133B.8.1	Warning curbs
	EXCEPTIONS: a. Between a walk or sidewalk and a street or driveway. b. If adjacent grade is higher than pedestrian way. c. If cane-detectable handrails, guardrails, or wheel-guides are provided.		
	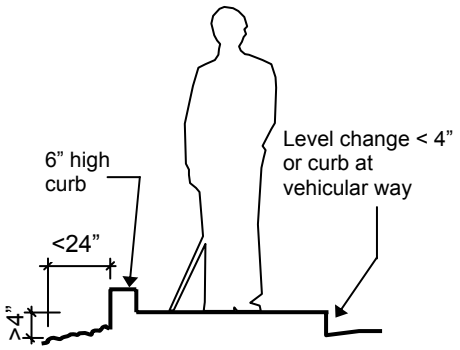		
3.14	Walks, sidewalks and pedestrian ways shall be free of gratings whenever possible.	CBC 1133B.7.2 & CBC 1124B.4	Gratings Gratings
	Identify location of all gratings within the accessible route and provide cut sheet of gratings for back check review. Grate openings cannot exceed 1/2" in the direction of travel. Gratings with elongated opening must be placed with the long dimension perpendicular to the dominant direction of traffic flow.	CBC 1124B.4 & CBC 1133B.7.2	Gratings Gratings
	EXCEPTIONS: a. In alteration projects, when DSA finds unreasonable hardship and when equivalent facilitation is provided. b. Where, due to legal or physical constraints, the site of the project will not allow compliance with this requirement or equivalent facilitation without creating an unreasonable hardship.		NOTE: Jurisdictional findings and determinations for exception (b) are subject to an internal DSA appeals process.
3.15	Wall mounted objects with the bottom edge between 27” and 80” AFF shall protrude no more than 4” into the pedestrian circulation area.	CBC 1133B.8.6.1	Protruding objects - General

3	Project designer (PD) shall address the following marked or circled items, and any additional plan review comments on drawings and specifications before scheduling a back check appointment for access compliance (AC). Any questions or points of disagreement must be resolved prior to back check by fax to plan reviewer (PR).	Justification / Reference or Code Citation	Headings / Comments / Notes & Examples

Check List 3. ACCESSIBLE ROUTE OF TRAVEL

3.16	Post or pylon-mounted objects with a bottom edge between 27" and 80" above the ground may overhang no more than 12": 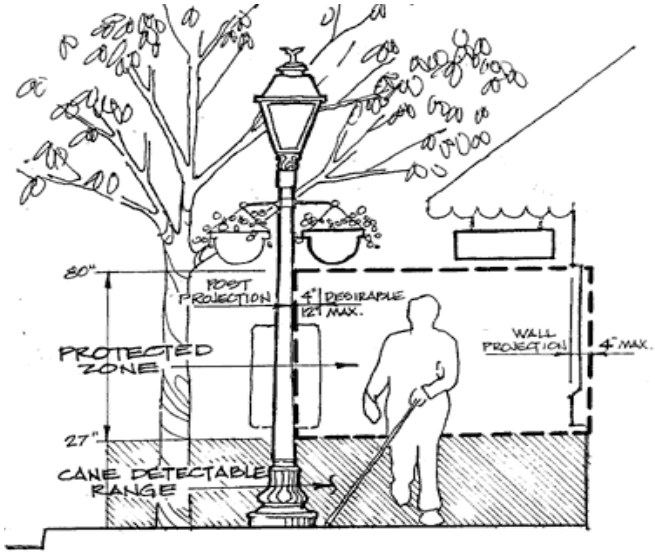	CBC 1133B.8.6.1	Protruding objects - General
3.17	Handrail extension shall not project into the accessible route of travel or create a hazard.	CBC 1133B.4.2.4 CBC 1133B.5.5.1.1 CBC 1133B.8.6.1	 Ramp Handrails Protruding objects - General
3.18	Accessible route of travel at parking stalls shall not compel persons with disabilities to wheel or walk behind parked vehicles other than their own.	CBC 1129B.4 #3	Arrangement of parking spaces
3.19	For large site and complicated accessible routes of travel, provide directional signs, indicating the direction to accessible parking, buildings, or outside facilities. Signs should be designed to facilitate reading by persons with impaired vision. Background contrast and character proportion is critical.	CBC 1117B.5 CBC 1127B.3	Signs and identification Signs
3.20	Provide detectable warnings at transit boarding platforms.	CBC 1133B.8.3	Detectable warnings at transit boarding platforms
3.21	Provide detectable directional texture (truncated bars) at transit boarding platforms.	CBC 1133B.8.4 CBC Fig. 11B-23B	Detectable directional texture at boarding platforms Directional bars

3	Project designer (PD) shall address the following marked or circled items, and any additional plan review comments on drawings and specifications before scheduling a back check appointment for access compliance (AC). Any questions or points of disagreement must be resolved prior to back check by fax to plan reviewer (PR).	Justification / Reference or Code Citation	Headings / Comments / Notes & Examples
	Check List 3. ACCESSIBLE ROUTE OF TRAVEL		
3.22	Provide a continuous band of detectable warning surface (36" deep) where a walk crosses or adjoins a vehicular way, and the walking surface is not separated from the hazardous vehicular way by curbs, railings or other elements.	CBC 1133B.8.5	Detectable warnings at hazardous vehicular areas
	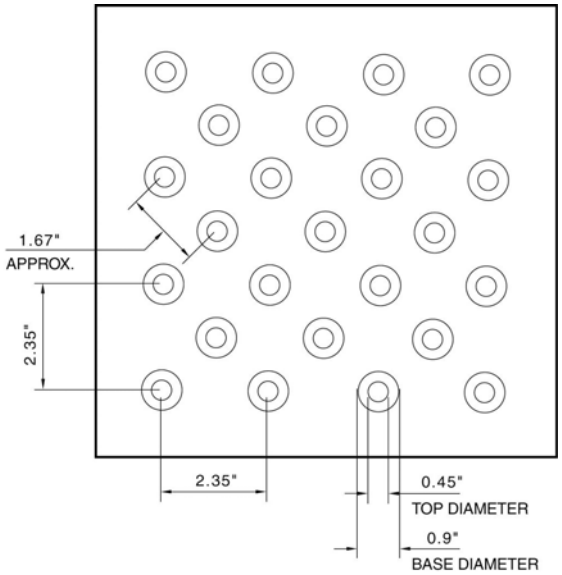		
	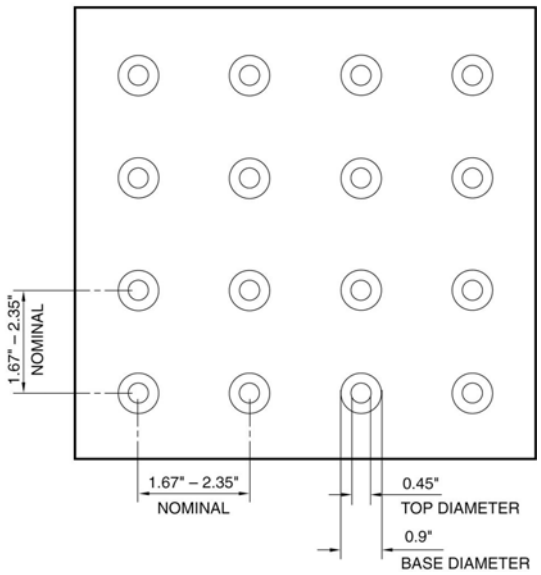		
3.23	If existing building elevators are being altered in order to be made accessible, no modifications are required to stairs that connect levels served by the accessible elevator.	CBC 1134B.2.1 #3.3 ADA Stds. 4.1.6(1)(d)	Accessibility for existing buildings - General Accessible buildings - Alterations

Return to TOC

4	Project designer (PD) shall address the following marked or circled items, and any additional plan review comments on drawings and specifications before scheduling a back check appointment for access compliance (AC). Any questions or points of disagreement must be resolved prior to back check by fax to plan reviewer (PR).	Justification / Reference or Code Citation	Heading / Comments / Notes & Examples

Check List 4. ACCESSIBLE PARKING, PASSENGER LOADING, AND BUS STOPS

4.1	For additional scoping requirements and exceptions see also applicable **DSA/AC Checklist 1.**		
ACCESSIBLE PARKING		CBC 1129B	Accessible parking required
4.2	Indicate location and layout of all accessible parking on site plan and connect dashed accessible route of travel to the access aisle.	CBSC Part 1 4-317(b)	Plans
4.3	Provide separate parking ratio for each parking lot on this site. Indicate name of lot, total number of stalls, van accessible stalls, and regular accessible stalls.	CBSC Part 1 4-317(b)	Plans
4.4	Provide enlarged plan in 1/4" scale representing the actual layout, including associated sidewalks, curb ramps, curb cuts, and location of water drains, for all accessible parking under this contract.	CBSC Part 1 4-317(b)	Plans
4.5	Provide the required number of accessible parking spaces for each lot (calculate each lot separately):		

Total Parking in Lot	Required Accessible	Including Van Accessible
1-25 spaces	1 space(s)	1
26-50	2	1
51-75	3	1
76-100	4	1
101-150	5	1
151-200	6	1
201-300	7	1
301-400	8	1
401-500	9	2
501-1,000	Two% of total	(1 in 8)
1,001 and over	Twenty plus one for each 100, or fraction thereof over 1,001	(1 in 8)

CBC Table 11B-6

Spaces required

NOTE:
One (1) in every eight (8) accessible spaces, but not less than one (1), shall be van accessible. Van accessible parking spaces are "accessible spaces" and are not to be considered "in addition" to the number of accessible spaces required.

EXCEPTIONS:

	a. 10% of the total number of parking spaces at outpatient units and facilities shall be accessible.	CBC 1129B.3 #1	Medical care outpatient facilities – Outpatient units and facilities
	b. 20% of the total number of parking spaces at units and facilities that specialize in treatment or services for persons with mobility impairments shall be accessible.	CBC 1129B.3 #2	Units and facilities that specialize in treatment or services for persons with mobility impairments
4.6	One (1) of every eight (8) accessible spaces, but not less than one, is required to be van accessible.	CBC 1129B.4 #2	Parking space size - Van space(s)
4.7	Where provided, electrical vehicle charging stations shall be accessible as required.	DSA Policy 97-03	Interim disabled access guidelines for electrical vehicle charging stations

© 2006 DSA/OUD

4	Project designer (PD) shall address the following marked or circled items, and any additional plan review comments on drawings and specifications before scheduling a back check appointment for access compliance (AC). Any questions or points of disagreement must be resolved prior to back check by fax to plan reviewer (PR).	Justification / Reference or Code Citation	Heading / Comments / Notes & Examples
	Check List 4. ACCESSIBLE PARKING, PASSENGER LOADING, AND BUS STOPS		
4.8	Consider relocating accessible parking if necessary. Accessible parking spaces must be located on the shortest accessible route of travel from adjacent parking to an accessible entrance. Note that required stalls need not be provided in the particular lot. They may be provided in a different location if equivalent or greater accessibility is ensured, in terms of distance from an accessible entrance, user cost and convenience.	CBC 1129B.1	Accessible parking required – General
4.9	Where parking lots serve accessible entrances of several buildings or different areas on site, accessible parking spaces must be dispersed and located closest to the accessible route of travel.	CBC 1129B.1	Accessible parking required – General
4.10	Rearrange parking layout so that persons with disabilities are not compelled to wheel or walk behind parked cars other than their own.	CBC 1129B.4.3	Arrangement of parking spaces
4.11	Typical parking detail(s) must match actual parking layout.	CBSC Part 1 4-317(b)	Plans
4.12	Accessible parking stalls and access aisles: provide and indicate the following dimensions and elements on plans:	CBC 1129B.4	Parking space size
	1. 8' wide access aisles on the passenger side of each van accessible parking stall.	CBC 1129B.4 #2	Van space(s)
	2. 5' wide access aisles on the passenger side of each accessible parking stall. Two adjacent accessible parking stalls may share a common access aisle.	CBC 1129B.4 #1	Dimensions
	3. 18' long parking stalls and access aisles.	CBC 1129B.4 #1	Dimensions
	4. 2% max slope in any direction at stalls and access aisles.	CBC 1129B.4 #4	Slope of parking space
	5. A 36" wide and 36" high International Symbol of Accessibility on pavement at rear of stall.	CBC 1129B.5	Identification of parking spaces for off-street parking facilities
	6. Post or wall mounted accessible parking stall signs:	CBC 1129B.5 CBC 1133B.8.6.3 ADA Stds. 4.6.4	Identification of parking spaces for off-street parking facilities Signage
	A. Signs must be located at the interior end of the accessible stall. Signs shall be located so they cannot be obscured by a vehicle parked in the space.		
	B. Signs must be reflectorized, 70 square inch min, with a white ISA on blue background.	CBC 1129B.5	Identification of parking spaces for off-street parking facilities
	C. Van stall signs must have additional language stating "Van Accessible" below the ISA.	CBC 1129B.5	Identification of parking spaces for off-street parking facilities
	7. "Tow-away" signs:	CBC 1129B.5 CBC 1133B.8.6.3	Identification of parking spaces for off-street parking facilities
	A. Post in a conspicuous place at each entrance to an off–street parking lot, or immediately adjacent to and visible from each designated stall.		
	B. Sign must be 17" x 22" min, with letters 1" high min.		
	C. Sign must state: "Unauthorized vehicles parked in designated accessible spaces not displaying distinguishing placards or license plates issued for persons with disabilities may be towed away at owner's expense. Towed vehicles may be reclaimed at _ _ _ _ _ or by telephoning _ _ _ _ _."		

© 2006 DSA/OUD

Project designer (PD) shall address the following marked or circled items, and any additional plan review comments on drawings and specifications before scheduling a back check appointment for access compliance (AC). Any questions or points of disagreement must be resolved prior to back check by fax to plan reviewer (PR).	Justification / Reference or Code Citation	Heading / Comments / Notes & Examples

Check List 4. ACCESSIBLE PARKING, PASSENGER LOADING, AND BUS STOPS

D. PD to provide contact info on plans.		
8. A bumper or curb shall be provided and located to prevent encroachment of cars over the required width of adjacent walkways.	CBC 1129B.3 #3 ADA Stds. 4.6.3	Walks and sidewalks - Continuous surface
9. Provide the words "NO PARKING" in each access aisle, painted in 12" high letters.	CBC 1129B.4	Dimensions and Van space(s)
4.13 Curb ramps with slopes greater than 2% cannot be within the 18' long access aisle. Provide parallel or perpendicular curb ramp instead of built-up curb ramp or redesign parking layout (see Checklist 4, Fig. 4-B).	CBC 1129B.4 #3 ADA Stds. 4.6.3	Arrangement of parking space Parking spaces See figures at the end of this Checklist
4.14 Accessible route of travel to parking: provide and indicate the following dimensions and elements on plans:	CBSC Part 1 4-317(b)	Plans
1. The access aisle must either be level with the adjacent accessible route or have a curb ramp. Provide spot elevations.	CBC 1129B.4 #3	Arrangement of parking space
2. Curb ramp opening must be located within the access aisle boundaries, not within the parking space boundaries.		NOTE: Detectable warning surfaces are required by federal law on all curb ramps.
3. Top landing at curb ramp must be level and 48" deep min.	CBC 1127B.5 #4	Level landing
4. Transitions from ramps to walks, gutters, or streets shall be flush and free of abrupt changes. (No 1/2" lip.)	ADA Stds. 4.7.2	Curb Ramps - Slope
4.15 Provide and indicate 98" min (8' - 2") vertical clearance at the van accessible parking stalls and at vehicle routes to and from these stalls.	ADA Stds. 4.6.5	Vertical Clearance
4.16 Provide and indicate a reasonable programmatic or architectural solution at parking areas controlled by ticket dispensers which may represent a barrier for persons with disabilities, particular those with reach range limitations. Examples of acceptable solutions include an accessible voice communication system and signage, or providing accessible parking spaces outside the controlled area.	DSA Policy 97-06 28 CFR 35.130(a)	Parking ticket dispensers
PARKING STRUCTURES	CBC 1130B	
4.17 Provide and indicate 98" min (8' - 2") vertical clearance at the accessible parking stalls and at vehicle routes to and from these stalls.	CBC 1130B & ADA Stds. 4.6.5	Parking structures Vertical clearance
EXCEPTIONS: a. Where DSA determines that compliance with building standards would create an unreasonable hardship, an exception may be granted when equivalent facilitation is provided.		NOTE: Jurisdictional findings and determinations for exception (b) are subject to an internal DSA appeals process.

© 2006 DSA/OUD

	Project designer (PD) shall address the following marked or circled items, and any additional plan review comments on drawings and specifications before scheduling a back check appointment for access compliance (AC). Any questions or points of disagreement must be resolved prior to back check by fax to plan reviewer (PR).	Justification / Reference or Code Citation	Heading / Comments / Notes & Examples
	Check List 4. ACCESSIBLE PARKING, PASSENGER LOADING, AND BUS STOPS		
	b. In existing buildings where DSA determines that, due to legal or physical constraints, compliance with building standards or equivalent facilitation would create an unreasonable hardship.		
4.18	In multi-story parking structures, provide accessible parking stalls on the following levels:	CBC 1129B.1	Accessible parking required – General
	1. All floor levels that have accessible walks or ramps leading to the exterior.		
	2. All floor levels that have accessible walks (incl. skywalks) or ramps leading to adjacent buildings.		
	3. All floor levels that have additional benefits or amenities, such as electrical charging stations, better security, scenic views, or other public accommodations such as shops, telephones, smoking areas, long-term parking, etc.		
4.19	Locate accessible parking closest to elevator, ramp or other accessible entrances.	CBC 1129B.1	Accessible parking required – General
PASSENGER LOADING ZONES		CBC 1131B	Passenger drop-off and loading zones
4.20	Provision of valet parking does not eliminate any of the requirements for accessible parking (i.e. provide all features to allow self parking).	CBC 1131B.3	Valet parking
4.21	Indicate type, location, and layout of all passenger drop-off and loading zones on site plan.	CBSC Part 1 4-317(b)	Plans
4.22	Where provided, one passenger drop-off and loading zone must be made accessible. Connect dashed accessible route of travel to area.	CBC 1131B.2	Accessible route of travel
4.23	Provide enlarged plan in 1/4" scale representing the actual layout, including associated sidewalks and curb ramps, for all accessible passenger loading zones. Provide and indicate:	CBSC Part 1 4-317(b)	Plans
	1. 5' x 20' access aisle adjacent and parallel to the vehicle pull–up space.	CBC 1131B.2 #1	Passenger loading zones – General
	2. Level access aisle and vehicle pull–up space (2% max in any direction).	CBC 1131B.2 #1	Passenger loading zones – General
	3. Indicate a curb ramp if there is a curb between the access aisle and the vehicle pull–up space, or if there is a curb between the access aisle and the accessible route.	CBC 1131B.2 #1	Passenger loading zones - General
	4. Vertical clearance of 114" min along at least one vehicle access route to such zones (from site entrances & exits).	CBC 1131B.2 #2	Passenger loading zones – Vertical Clearance
	5. Design of identifying signage should be different than that used at accessible parking spaces (e.g., by providing a white post-mounted sign with the ISA and stating "Passenger Loading Only – No Parking").	ADA Stds. 4.1.2(7)(b)	Accessible passenger loading zones
	6. Detectable warning surface at blended transitions and curb ramps.	CBC 1133B.8.5 ADA Stds. 4.29.5, IRs 11B-2, 11B-3 11B-4	Detectable Warnings at Hazardous Vehicular Areas

© 2006 DSA/OUD

	Project designer (PD) shall address the following marked or circled items, and any additional plan review comments on drawings and specifications before scheduling a back check appointment for access compliance (AC). Any questions or points of disagreement must be resolved prior to back check by fax to plan reviewer (PR).	Justification / Reference or Code Citation	Heading / Comments / Notes & Examples
Check List 4.	**ACCESSIBLE PARKING, PASSENGER LOADING, AND BUS STOPS**		
4.24	Where valet parking is provided, provide accessible passenger loading zone.	CBC 1131B.3	Valet parking
BUS STOPS		CBC 1131B	
4.25	Where provided, provide accessible bus stop(s) and pad(s).	CBC 1131B.4	Bus stop pads and shelters
4.26	Indicate location and layout of all accessible bus stops on site plan and connect dashed accessible route to bus stop pad.	CBSC Part 1 4-317(b)	Plans
4.27	Provide and indicate an 8' long by 5' wide bus stop pad (8' measured perpendicular to curb and 5' measured parallel to curb).	ADA Stds. 10.2.1(1)	Bus stops and terminals – New construction
4.28	In new construction: provide a square curb surface between the pad and road or other detectable warning (provide detail).	CBC 1131B.4	Bus stop pads and shelters
4.29	The slope of the pad perpendicular to the roadway must not exceed 2%.	CBC 1131B.4	Bus stop pads and shelters
4.30	The slope of the pad parallel to the roadway must be the same as the roadway.	CBC 1131B.4	Bus stop pads and shelters
4.31	Provide 30" x 48" clear floor wheelchair space completely within bus stop shelter and connect space to bus stop pad and accessible route of travel.	CBC 1131B.4	Bus stop pads and shelters
ON STREET PARKING			
4.32	Additional information for on-street parking, see also Caltrans Standard Plans A90A and A90B.	Caltrans Std Plans	For Standard Plans, see: http://www.dot.ca.gov/hq/esc/oe/project_plans/HTM/stdplns-dual-new02.htm

© 2006 DSA/OUD

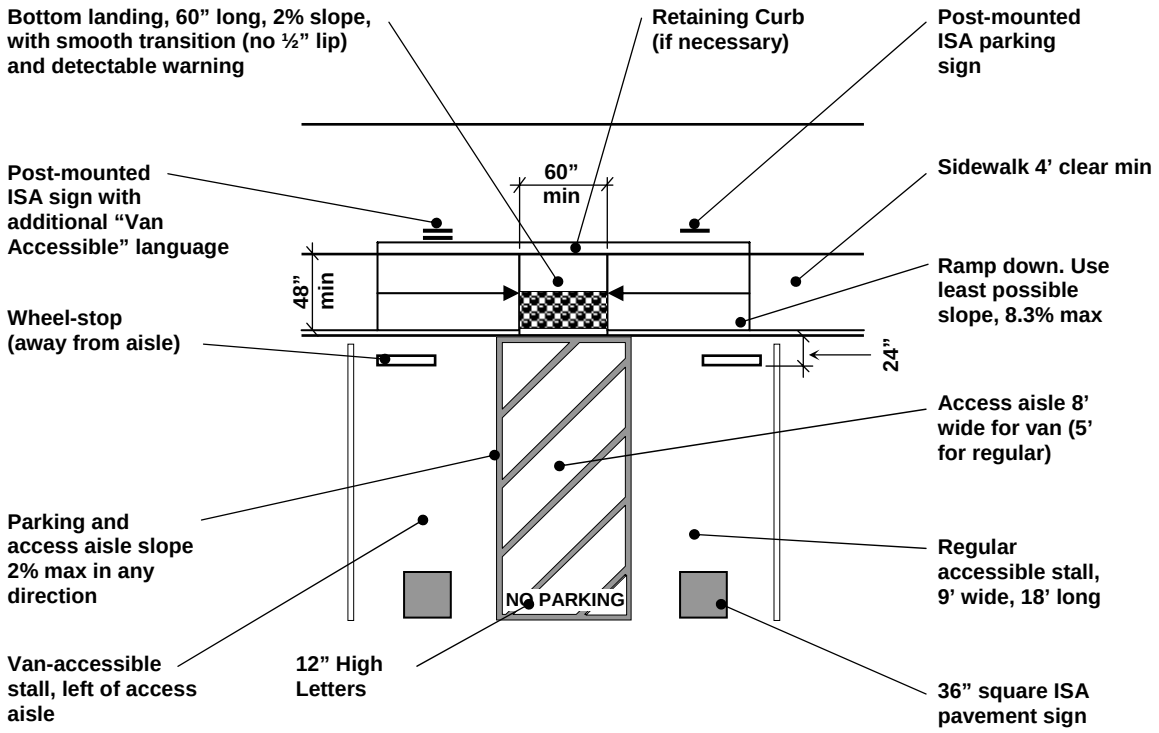

Ramp surface to be contrasting finish from adjacent walk.

Fig 4-A. Depressed Curb Ramp at Accessible Parking (Typical)

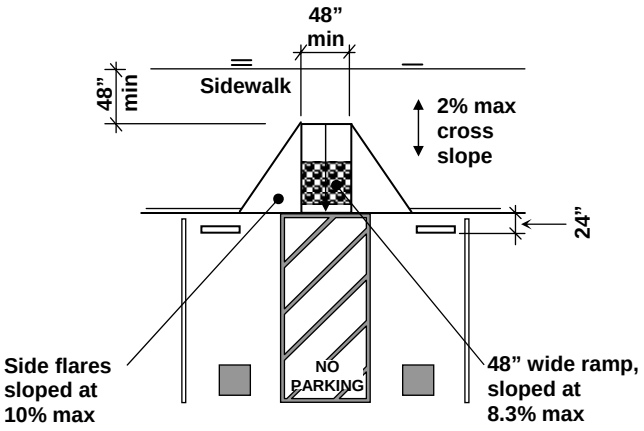

Ramp surface to be contrasting finish from adjacent walk.

Fig 4-B. Curb Cut at Accessible Parking

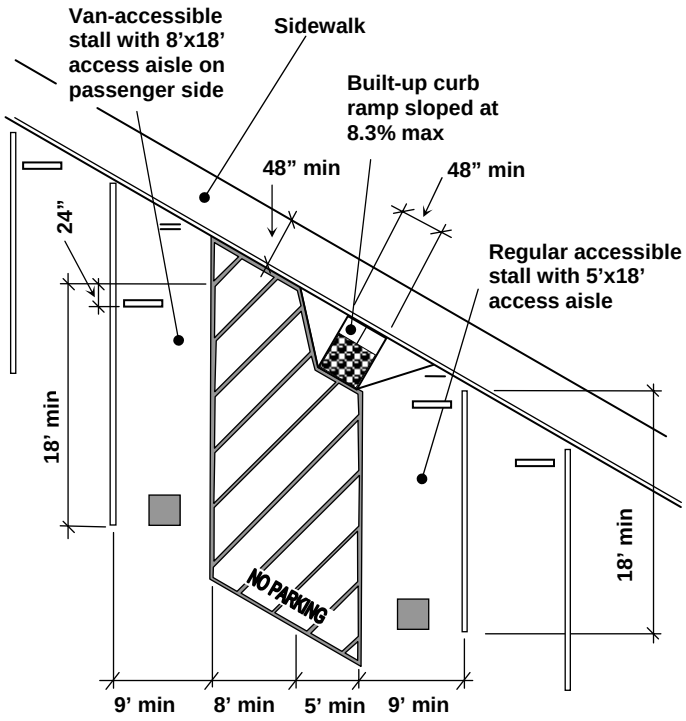

Ramp surface to be contrasting finish from adjacent walk.

Note that neither built-up curb ramp, nor sidewalk protrude into the required, perpendicular 18’x17’ van space, or the 18’x14’ regular space.

Fig 4-C. Built-up Curb Ramp at Accessible Angled Parking

© 2006 DSA/OUD

5	Project designer (PD) shall address the following marked or circled items, and any additional plan review comments on drawings and specifications before scheduling a back check appointment for access compliance (AC). Any questions or points of disagreement must be resolved prior to back check by fax to plan reviewer (PR).	Justification / Reference or Code Citation	Headings / Comments / Notes & Examples

Check List 5. CURB RAMPS AND PEDESTRIAN CROSSINGS

5.1	For additional scoping requirements and exceptions see also applicable **DSA/AC Checklist 1.**		
CURB RAMPS		**CBC 1127B.5**	
5.2	Indicate location and layout of all curb ramps on site plan.	CBSC Part 1 4-317(b)	Plans
5.3	Typical curb ramp details must match actual layout. Provide dimensioned detail in 1/4" scale representing the actual layout, including associated sidewalks, for all accessible curb ramps under this contract.	CBSC Part 1 4-317(b)	Plans
5.4	Curb ramps cannot project into vehicular traffic lanes or into the 18' long access aisle of accessible parking spaces.	CBC 1129B.4 #3 ADA Stds 4.7.6	Parking space size - Arrangement of parking space Built-up curb ramps
5.5	Indicate 48" min width exclusive of side flares.	CBC 1127B.5 #2	Width of curb ramps
5.6	Provide spot elevations at top and bottom of curb ramp and at relevant spots on sidewalk.	CBSC Part 1 4-317(b)	Plans

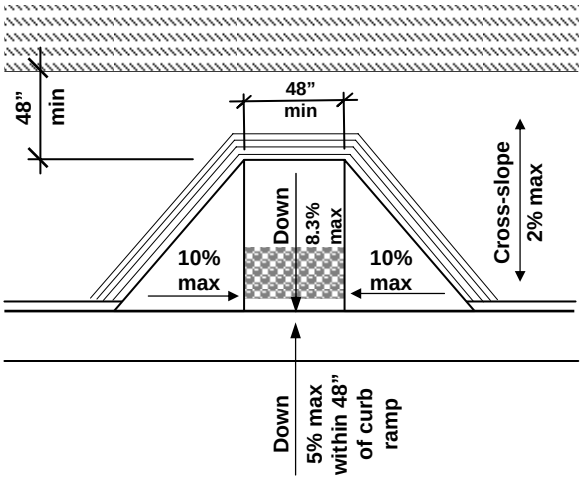

Sample Curb Ramp

DEFINITIONS:

CURB RAMP: A sloping pedestrian way, intended for pedestrian traffic, which provides access from a walk or sidewalk to a surface located above or below an adjacent curb face.

CURB CUT: An interruption of a curb at a pedestrian way, which separates surfaces that are substantially at the same elevation.

5.7	Indicate curb ramp slope based on available length and elevation change. Use the least possible slope but never greater than the 8.3% max.	CBC 1127B.5 #3 & ADA Stds 4.7.2	Slope of curb ramps Curb ramps - slope
5.8	Indicate side flare slope (10% max, or 8.3% max if top landing is less than 48").	CBC 1127B.5 #3 CBC 1127B.5 #4	Slope of curb ramps Level landing
5.9	Indicate counter slope of adjoining gutters or road surface at the bottom of and immediately adjacent to the curb ramp (5% max for 48" in the direction of travel).	CBC 1127B.5 #3 ADA Stds 4.7.2	Slope of curb ramps Slope

© 2006 DSA/OUD

Project designer (PD) shall address the following marked or circled items, and any additional plan review comments on drawings and specifications before scheduling a back check appointment for access compliance (AC). Any questions or points of disagreement must be resolved prior to back check by fax to plan reviewer (PR).	Justification / Reference or Code Citation	Headings / Comments / Notes & Examples

Check List 5. CURB RAMPS AND PEDESTRIAN CROSSINGS

5.10	Provide and indicate detectable warning surface (i.e. truncated domes) at perpendicular curb ramp. Domes must extend the full width and length of the curb ramp, excluding the flares. 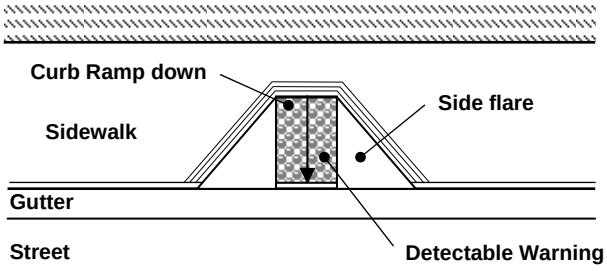 **Perpendicular Curb Ramp**	CBC 1127B.5 #8, DSA-IR 11B-3, DSA-IR 11B-4 & ADA Stds 4.7.7	Detectable warnings Detectable warnings at curb ramps Detectable warnings Detectable warnings <u>NOTE:</u> DSA may approve a 36” long warning surface as equivalent to full width and length in accordance with IR 11B-3. <u>NOTE:</u> As of July 26, 2001, ADA Stds requires the provision of truncated domes on all curb ramps, regardless of slope. Compliance with this requirement rests with the Project Designer.
5.11	Provide and indicate detectable warning surface (i.e. truncated domes) at parallel or combination curb ramp. Provide 36” wide band of detectable warning between pedestrian area and vehicular way. 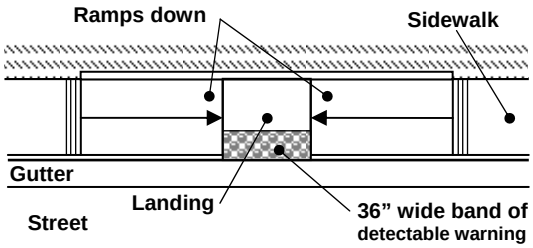 **Parallel Curb Ramp** 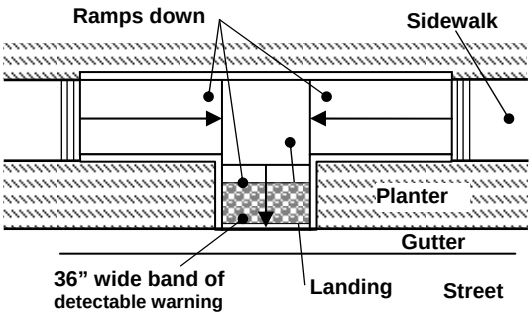 **Combination Curb Ramp**	CBC 1133B.8.5 & ADA Stds 4.29.5	Detectable warnings at hazardous vehicular areas

© 2006 DSA/OUD

5	Project designer (PD) shall address the following marked or circled items, and any additional plan review comments on drawings and specifications before scheduling a back check appointment for access compliance (AC). Any questions or points of disagreement must be resolved prior to back check by fax to plan reviewer (PR).	Justification / Reference or Code Citation	Headings / Comments / Notes & Examples
	Check List 5. CURB RAMPS AND PEDESTRIAN CROSSINGS		
5.12	Indicate the following for detectable warning surfaces		
	1. Visual contrast with adjoining surfaces, either a light-on-dark, or dark-on-light contrast.	CBC 1127B.5 #8	Detectable warnings
	2. Staggered domes (diagonal grid), spaced 2.35” on center, or in-line domes (square grid), spaced 1.67” to 2.35” on center.	CBC 1127B.5 #8 DSA-IR 11B-4	Detectable warnings Detectable warnings
	3. Detectable warning must be located 6” to 8” from the curb line (flow line).	DSA-IR 11B-4	Detectable warnings
5.13	(Removed and reserved.)		
5.14	Provide dimension on plan, indicating that the 48” landing at the bottom of the curb ramp is fully contained within marked crossings.	CBC 1127B.5 #10, CBC Fig. 11B-22(c) & (d), ADA Stds 4.7.9 & ADA Stds Fig. 15	Diagonal curb ramps Curb ramps at marked crossings Location at marked crossings Curb Ramps at Marked Crossings
5.15	Design to provide 48” min deep level top landing or slope flares at 8.3% max.	CBC 1127B.5 #4	Level landing <u>NOTE:</u> The length of a curb ramp (sloped 8.3%) at a regular sidewalk with 2% cross slope and 6” curb is 95”.
5.16	Provide 12” wide grooved border around upper edges of curb ramp and flares to indicate transition from sidewalk to curb ramp. 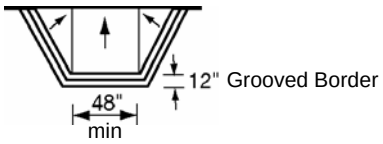 **Perpendicular Curb Ramp**	CBC 1127B.5 #7	Border
5.17	Provide 12” wide grooved border as part of level walkway, not as part of sloped curb ramp and flares.	CBC 1127B.5 #7	Border
5.18	Indicate how finish of curb ramp and flared surfaces contrast with that of adjacent sidewalk.	CBC 1127B.5 #6	Finish

Project designer (PD) shall address the following marked or circled items, and any additional plan review comments on drawings and specifications before scheduling a back check appointment for access compliance (AC). Any questions or points of disagreement must be resolved prior to back check by fax to plan reviewer (PR).	Justification / Reference or Code Citation	Headings / Comments / Notes & Examples

Check List 5. CURB RAMPS AND PEDESTRIAN CROSSINGS

5.19 Provide and indicate 60” min wide bottom or intermediate landing at depressed or combination curb ramp.	CBC 1133B.5.4.7 & ADA Stds 4.8.4(2)	Other intermediate landings Landings

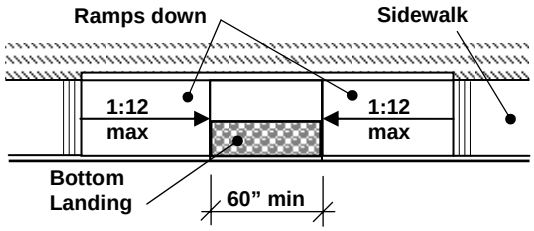

Parallel Curb Ramp

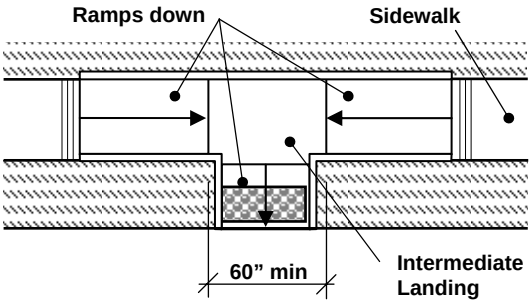

Combination Curb Ramp

PEDESTRIAN CROSSINGS

5.20 At diagonal curb ramps, provide dimension on plan, indicating a 24” straight curb segment, perpendicular to the direction of the cross walks, on each side of the curb ramp.	CBC 1127B.5 #10, CBC Fig. 11B-22 & ADA Stds 4.7.10	Diagonal curb ramps Curb ramps at marked crossings Diagonal curb ramps
5.21 At diagonal curb ramps, there must be a 24” straight curb segment within the marked crossing.	CBC 1127B.5 #10	Diagonal curb ramps
5.22 Provide level cut through pedestrian island (median), or provide a crowned cut through sloped at 8.3% max with a 48” min long top landing.	ADA Stds 4.7.11 & ADA Stds Fig. 15 (a) & (b)	Islands Curb ramps at marked crossings

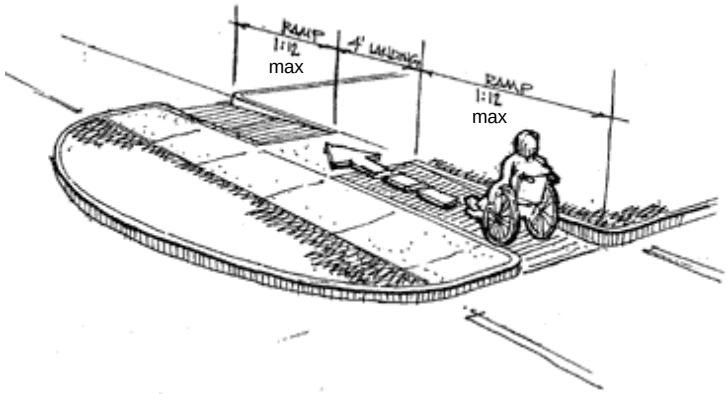

© 2006 DSA/OUD

Project designer (PD) shall address the following marked or circled items, and any additional plan review comments on drawings and specifications before scheduling a back check appointment for access compliance (AC). Any questions or points of disagreement must be resolved prior to back check by fax to plan reviewer (PR).	Justification / Reference or Code Citation	Headings / Comments / Notes & Examples

Check List 5. CURB RAMPS AND PEDESTRIAN CROSSINGS

5.23 Provide and indicate a level 30” x 48” min clear space, centered and parallel to the pedestrian signal push button.	CBC 1118B.4 #1	Clear floor or ground space for wheelchairs - Size and approach
5.24 Indicate height of pedestrian signal push button (48” max).	CBC 1117B.5.9	Traffic-control devices
5.25 Provide and indicate the following at the pedestrian signal push button:		
1. Activating force must be 5 lbs or less.	CBC 1117B.6 #4	Controls and operating mechanisms - Operation
2. A textured horizontal yellow band 2” wide and encircling the pole, and a 1” wide dark border band above and below this yellow band.	CBC 1117B.5.9	Traffic-control devices
BLENDED TRANSITIONS		
5.26 Where a walk crosses or adjoins a vehicular way, and the walking surfaces are not separated by curbs, railings, or other elements between the pedestrian areas and vehicular areas, the boundary between the areas must be defined by a continuous, yellow, 36” wide detectable warning surface that differs from the adjoining walking surface in resiliency or sound on cane contact.	CBC 1133B.8.5 & ADA Stds 4.29.5	Detectable warnings at hazardous vehicular areas Detectable warnings at hazardous vehicular areas

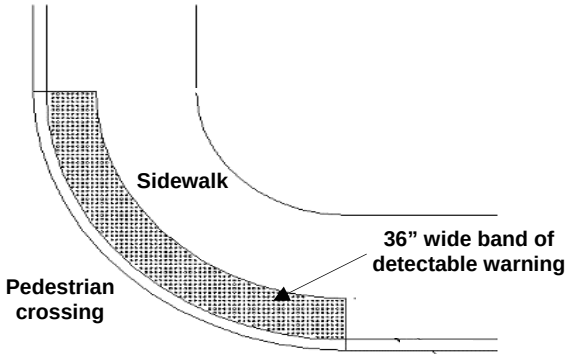

APPLICATION IN THE PUBLIC RIGHTS-OF-WAY		
5.27 For acceptable designs for curb ramps, traffic islands, blended transitions, and detectable warnings in the public rights-of-way, see Caltrans Standard Plans A88A and A88B.	Caltrans Std Plans	For Standard Plans, see: http://www.dot.ca.gov/hq/esc/oe/project_plans/HTM/stdplns-dual-new02.htm

© 2006 DSA/OUD

Project designer (PD) shall address the following marked or circled items, and any additional plan review comments on drawings and specifications before scheduling a back check appointment for access compliance (AC). Any questions or points of disagreement must be resolved prior to back check by fax to plan reviewer (PR).	Justification / Reference or Code Citation	Headings / Comments / Notes & Examples

Check List 5. CURB RAMPS AND PEDESTRIAN CROSSINGS

PEDESTRIAN OVERPASSES AND UNDERPASSES		
5.28 Pedestrian ramps on pedestrian grade separations must comply with the requirements for ramps. EXCEPTIONS: a. When the grade differential of the walking surface of a pedestrian grade separation exceeds 14 feet due to required height clearance and grade conditions, and DSA finds that wheelchair accessibility or equivalent facilitation would create an unreasonable hardship, such accessibility need not be provided. However, the requirements in these regulations relating to other types of mobility shall be complied with. b. For existing facilities, this section shall not apply where, due to legal or physical constraints, the site of the project will not allow compliance with these regulations or equivalent facilitation without creating an unreasonable hardship.	CBC 1128B	Pedestrian grade separations (overpasses and underpasses) <u>NOTE:</u> Jurisdictional findings and determinations for exceptions (a) and (b) are subject to an internal DSA appeals process.
5.29 Provide and indicate level landings at pedestrian over- and underpasses:		
1. At intervals not exceeding 30” of vertical rise, if slope is greater than 5%.	CBC 1133B.5.4.1	Location of landings
2. At least every 400’ if a continuous slope is between 2% and 5%.	CBC 1133B.7.6	Walks with continuous gradients

© 2006 DSA/OUD

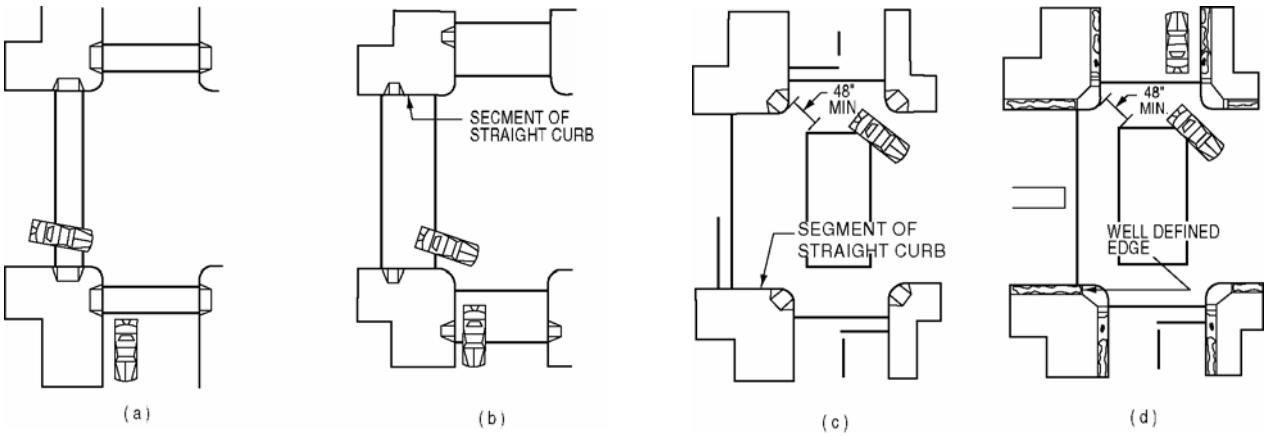

Fig 5-A. Typical Pedestrian Crossing Layouts

Height of Curb Face	1:10 max. Flare Width at Curb	Ramp Run Length (Plan)*	Total Needed Sidewalk Width (incl. 4' Landing)
4" (10.2 cm)	40" (1.02 m)	63" (1.6 m)	111" (2.82 m)
5" (12.7 cm)	50" (1.27 m)	78" (1.98 m)	126" (3.2 m)
6" (15.2 cm)	60" (1.52 m)	95" (2.41 m)	143" (3.63 m)
7" (17.8 cm)	70" (1.78 m)	111" (2.82 m)	159" (4.04 m)
7.5" (19.0 cm)	75" (1.90 m)	118.5" (3.01 m)	166.5" (4.23 m)
8" (20.3 cm)	80" (2.03 m)	126" (3.2 m)	174" (4.42 m)

***** *For ramp sloping 8.3% on sidewalk with 2% cross slope*

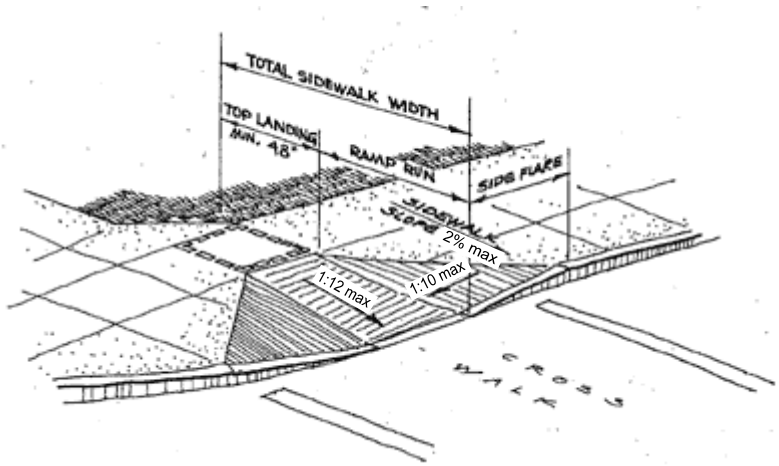

Fig 5-B. Sidewalk Width Requirement

© 2006 DSA/OUD

6	Project designer (PD) shall address the following marked or circled items, and any additional plan review comments on drawings and specifications before scheduling a back check appointment for access compliance (AC). Any questions or points of disagreement must be resolved prior to back check by fax to plan reviewer (PR).	Justification / Reference or Code Citation	Headings / Comments / Notes & Examples
	Check List 6. WALKS AND SIDEWALKS		
6.1	For additional scoping requirements and exceptions see also applicable **DSA/AC Checklist 1.**		
6.2	All walks and sidewalks must be accessible (i.e. those that are to be newly constructed or altered, or are part of the required accessible route of travel). EXCEPTION: In alteration projects, when DSA determines that compliance would create an unreasonable hardship, an exception may be granted when an equivalent alternative accessible path of travel is provided.	CBC 1114B.1.2	Accessible route of travel <u>DEFINITIONS:</u> SIDEWALK: A surfaced pedestrian way contiguous to a street used by the public. WALK: A surfaced pedestrian way not located contiguous to a street used by the public.
6.3	Provide and indicate enlarged detail of surface material transition at: **1.** Any change in surface material. **2.** Where new construction meets existing surface.	CBSC Part 1 4-317(b)	Plans
6.4	Vertical changes in level along the accessible route of travel cannot exceed 1/4". Level changes in the accessible route between 1/4" and 1/2" must be beveled at 1:2 max slope.	CBC 1133B.7.4	Changes in level
6.5	Provide and indicate continuous common surface material to be slip resistant, stable, and firm (bricks, cobble stones, rough pavers, wood boards, etc., should not be used).	CBC 1133B.7.1 & CBC 1124B.1 ADA Stds. A4.5.1	Continuous surface Ground and floor surfaces General recommendation
6.6	Provide and indicate width of walk or sidewalk at all locations.		
	1. 48" min. width required.	CBC 1133B.7.1	Continuous surface
	2. Wheelchair turning space 60" min wherever a person using a wheelchair may have to make a 180 degree or greater turn to access elements or equipment (e.g., at doors, gates, tables and seating accommodations, dispensers, drinking fountains, mail boxes, telephones, etc.).	CBC 1118B.3 & ADA Stds. 4.2.3	Wheelchair turning space Wheelchair turning space
	3. 60" min. width if there are no passing spaces, measuring 60" by 60" min, located at reasonable intervals not to exceed 200'. A T-shaped space complying with CBC Figure 11B-12(b) is an acceptable passing space.	ADA Stds 4.3.4 CBC Fig. 11B-12(b)	Passing space
	EXCEPTION: When, because of right–of–way restrictions, natural barriers or other existing conditions, DSA determines that compliance with the 48" clear sidewalk width would create an unreasonable hardship, the clear width may be reduced to 36".	CBC 1133B.7.1.3	<u>NOTE:</u> Required sidewalk width must be measured exclusive of the curb. 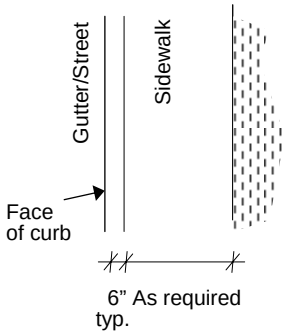

6	Project designer (PD) shall address the following marked or circled items, and any additional plan review comments on drawings and specifications before scheduling a back check appointment for access compliance (AC). Any questions or points of disagreement must be resolved prior to back check by fax to plan reviewer (PR).	Justification / Reference or Code Citation	Headings / Comments / Notes & Examples
	Check List 6. WALKS AND SIDEWALKS		
6.7	Provide spot elevation and gradients to show how slope requirements are met.	CBSC Part 1 4-317(b)	Plans
6.8	Slope perpendicular to the direction of travel (cross slope) must be less than 2%.	CBC 1133B.7.1.3 & ADA Stds. 4.3.7	Surface cross slopes Slope
6.9	At driveway, show how the 2% cross slope requirement is met. At a minimum, provide and indicate a 48" wide portion of the sidewalk to comply. Provide section through driveway.	CBSC Part 1 4-317(b) & CBC 1133B.7.1.3	Plans Surface cross slopes
	EXCEPTION:		
	When, due to right-of-way restrictions, natural barriers or other existing conditions, DSA determines that compliance with the 48" clear sidewalk width would create an unreasonable hardship, the clear width may be reduced to 36".	CBC 1133B.7.1.3	Surface cross slopes
6.10	Slope exceeds 5% - provide curb ramp at this location. See **Checklist 5** for requirements.	CBC 1127B.5	Ramps
6.11	Slope exceeds 5% - provide ramp at this location. See **Checklist 7** for requirements.	CBC 1133B.5	Ramps
6.12	Provide a level resting area 5' in length at intervals of at least every 400', or indicate that slope in the direction of travel is 2% or less by providing spot elevations.	CBC 1133B.7.6	Walks with continuous gradients
6.13	Provide a passing space, measuring 60"x60" every 200', or indicate width of walk to be 60" or more.	ADA Stds. 4.3.4	Passing space
6.14	Provide level areas (2% max slope in any direction) at doors and gates.	CBC 1133B.2 CBC 1133B.7.5	Doors Level areas
6.15	Walks, sidewalks, and pedestrian ways shall be free of gratings whenever possible.. See **Checklist 3** for exceptions.	CBC 1133B.7.2	Gratings
6.16	Identify location of all gratings within the POT and provide cut sheet of gratings for back check review. If gratings are located in walking surfaces, then grate openings cannot exceed 1/2" in the direction of travel flow. Elongated openings should be placed perpendicular to the dominant direction of travel.	CBC 1124B.4 CBC 1133B.7.2 ADA Stds. 4.5.4	Ground/floor surfaces-Gratings Walks/Sidewalks-Gratings Gratings
6.17	If the level change between walk/sidewalk and adjacent surface exceeds 4" in height, provide detail and indicate a 6" warning curb or appropriate guide rails.	CBC 1133B.8.1	Warning curbs
6.18	If the level change between walk/sidewalk and adjacent surface exceeds 30" in height, provide detail and indicate guardrail (42" AFF).	CBC 509	Guardrails

© 2006 DSA/OUD

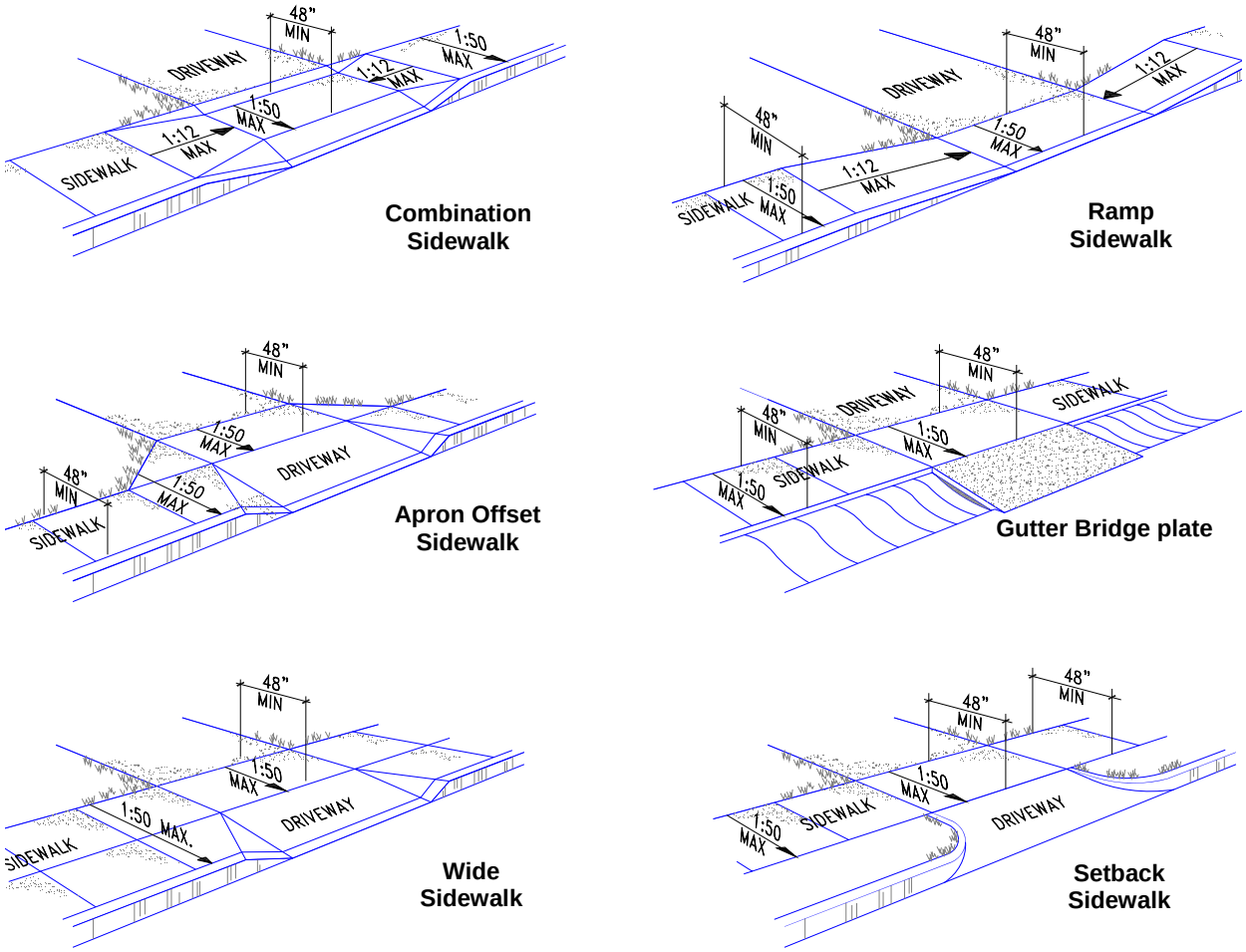

Fig 6-A. Examples of Sidewalk Driveway Connections

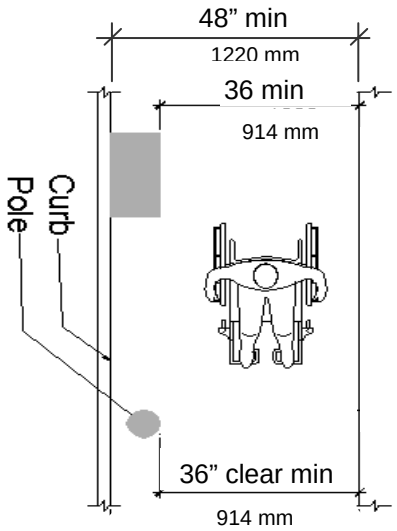

Fig 6-B. Sidewalk Width

© 2006 DSA/OUD

7	Project designer (PD) shall address the following marked or circled items, and any additional plan review comments on drawings and specifications before scheduling a back check appointment for access compliance (AC). Any questions or points of disagreement must be resolved prior to back check by fax to plan reviewer (PR).	Justification / Reference or Code Citation	Headings / Comments / Notes & Examples
	Check List 7. ACCESSIBLE RAMPS		
7.1	For additional scoping requirements and exceptions see also applicable **DSA/AC Checklist 1.**		
RAMPS		CBC 1133B.5	
7.2	Indicate location, layout, and slope of all ramps on site plan.	CBSC Part 1 4-317(b)	Plans
7.3	All ramps under this contract must be made accessible (i.e. those that are to be newly constructed or altered, or are part of the required POT). EXCEPTION: In alteration projects, when DSA finds unreasonable hardship and when an alternative accessible POT is provided.	CBC 1114B.1.2	Accessible route of travel
7.4	Indicate compliance status of existing ramps in the POT (slope, width, landings, etc.).	CBSC Part 1 4-317(b)	Plans
7.5	Provide enlarged plan and sections (longitudinal and transversal) of ramp in 1/4" scale.	CBSC Part 1 4-317(b)	Plans
7.6	Typical ramp detail provided is not similar to actual layout. Modify to provide dimensioned detail in 1/4" scale representing the actual layout.	CBSC Part 1 4-317(b)	Plans
7.7	Indicate ramp slopes. Use <u>least possible</u> but never more than 8.3% max.	CBC 1133B.5.1 & CBC 1133B.5.3 ADA Stds 4.8.2	Ramps – General Slope Slope and rise
7.8	Slope perpendicular to the direction of travel (cross slope) must be 2% or less.	CBC 1133B.5.3.1	Slope
7.9	Provide spot elevations and ramp run dimensions at this location to show how slope requirements are met.	CBSC Part 1 4-317(b)	Plans
7.10	Ramp run cannot change direction between level landings.	CBC 1133B.5.4.1	Location of landings
7.11	Provide and indicate slip-resistant surface if ramp slope is 6% or more.	CBC 1133B.7.1.2	Slopes 6 percent or greater
7.12	Provide and indicate width of ramp at all locations.		
	1. 48" min required.	CBC 1133B.5.2.1	Width
	2. 60" min if serving an occupancy load of >300 and the entrance ramp is the only exit discharge path from a building.	CBC 1133B.5.2.2	Entrance and special occupancy
	EXCEPTIONS:		
	a. Handrails may project into the required width a distance of 3-1/2" from each side.	CBC 1003.3.4.2	Ramps - width
	b. Other projections (e.g., trim, decorative features) may project into the required width a distance of 1-1/2" from each side.	CBC 1003.3.4.2	Ramps - width

© 2006 DSA/OUD

	Project designer (PD) shall address the following marked or circled items, and any additional plan review comments on drawings and specifications before scheduling a back check appointment for access compliance (AC). Any questions or points of disagreement must be resolved prior to back check by fax to plan reviewer (PR).	Justification / Reference or Code Citation	Headings / Comments / Notes & Examples
	Check List 7. ACCESSIBLE RAMPS		
7.13	Provide and indicate one of the following at ramp which is not bounded by a wall or a fence (with a smooth and uninterrupted surface).	CBC 1133B.5.6	Wheel guides
	1. 2” min high guide curb at each side.		
	2. Wheel guide rail centered at 3” AFF (+/- 1”) above ramp.		
7.14	Provide and indicate one of the following at ramp landing which is not bounded by a wall or a fence (with a smooth and uninterrupted surface) if the adjacent grade drops more than 4” vertically.	CBC 1133B.5.4.9	Hazards
	1. 2” min high curb at each side.		
	2. Wheel guide rail centered at 3” AFF (+/- 1”) above ramp.		
RAMP LANDINGS		CBC 1133B.5.4	Landings
7.15	Provide and indicate dimension of top landing.		
	1. 60” x 60” min.	CBC 1133B.5.4.2	Size of top landings
	2. Level and clear (2% max slope).	CBC 1133B.5.4.1	Location of landings
7.16	Provide and indicate dimension of bottom landing.		
	1. 72” long and as wide as the ramp, if no change in direction.	CBC 1133B.5.4.5 & CBC 1003.3.4.4	Landing width Landings
	2. 72” long and 60” wide, if change in direction.	ADA Stds 4.8.4(3)	Ramps - Landings
	3. Level and clear (2% max slope).	CBC 1133B.5.4.1	Location of landings
7.17	Provide and indicate dimension of intermediate landing.		
	1. 60” long and as wide as the ramp, if no change in direction.	CBC 1133B.5.4.5, CBC 1133B.5.4.6 & ADA Stds 4.8.4(3)	Landing width Change of direction Ramps - Landings
	2. 72” long and 60” wide, if change in direction.		
	3. Level and clear (2% max slope).	CBC 1133B.5.4.1	Location of landings
	4. Provide intermediate landing at each change in direction.	CBC 1133B.5.4.1	Location of landings
7.18	Provide and indicate dimension of ramp landing at door or gate.		
	1. Doors in any position cannot reduce the minimum dimension of the landing to less than 42”.	CBC 1003.3.4.4	Ramps - Landings
	2. Fully opened doors cannot reduce the required width of the landing by more than 3”.	CBC 1003.3.4.4	Ramps - Landings
	3. Required door landing size per CBC Fig. 11B-26, but never less than 24” x 60” strike edge clearance at exterior and interior doors.	CBC 1133B.5.4.4, CBC 1003.3.4.4 & ADA Stds 4.8.4(4)	Strike edge of extension Ramps – Landings Landings
	4. Level and clear (2% max slope).	CBC 1133B.5.4.1	Location of landings
7.19	Provide intermediate landings at intervals not exceeding 30” of vertical rise.	CBC 1133B.5.4.1	Location of landings

© 2006 DSA/OUD

Project designer (PD) shall address the following marked or circled items, and any additional plan review comments on drawings and specifications before scheduling a back check appointment for access compliance (AC). Any questions or points of disagreement must be resolved prior to back check by fax to plan reviewer (PR).	Justification / Reference or Code Citation	Headings / Comments / Notes & Examples

Check List 7. ACCESSIBLE RAMPS

7.20 If ramps change direction at landings, the intermediate and bottom landings shall be a minimum of 60” wide.	ADA Stds 4.8.4(3)	Landings
7.21 Wheel-guide rail, curb, or other element shall not encroach into the required 72” long landing (below 27” AFF) - provide 72” clear.	CBC 1003.3.4.4 & CBC 1133B.8.6.1	Ramps – Landings Protruding objects - General

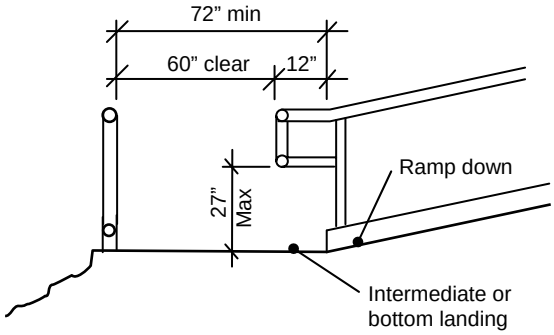

Intermediate or bottom landing

7.22 Indicate how exterior ramps and landings are designed so that water will not accumulate on walking surface.	ADA Stds 4.8.8	Outdoor conditions
7.23 Provide enlarged detail, showing smooth transition between ramp runs, landings, and existing surfaces.	CBSC Part 1 4-317(b)	Plans
HANDRAILS FOR RAMPS		
7.24 Provide handrails on both sides of ramp. EXCEPTIONS: a. Ramps at exterior door landings that rise less than 6” or have a projection of less than 72”. b. Curb ramps. c. Ramps immediately adjacent to seating in assembly areas.	CBC 1133B.5.5.1, & ADA Stds 4.8.5	Handrails for ramps Handrails
7.25 Handrails must be continuous the full length of the ramp run, plus extensions.	CBC 1133B.5.5.1	Handrails for ramps
7.26 Inside handrails at switchback or dogleg ramps must be continuous.	CBC 1133B.5.5.1	Handrails for ramps
7.27 Top of gripping surface must be between 34” and 38” AFF.	CBC 1133B.5.5.1 ADA Stds 4.8.5(5)	Handrails for ramps Handrails

7	Project designer (PD) shall address the following marked or circled items, and any additional plan review comments on drawings and specifications before scheduling a back check appointment for access compliance (AC). Any questions or points of disagreement must be resolved prior to back check by fax to plan reviewer (PR).	Justification / Reference or Code Citation	Headings / Comments / Notes & Examples
	Check List 7. ACCESSIBLE RAMPS		
7.28	Extend handrail 12” beyond the top and bottom of the ramp run. 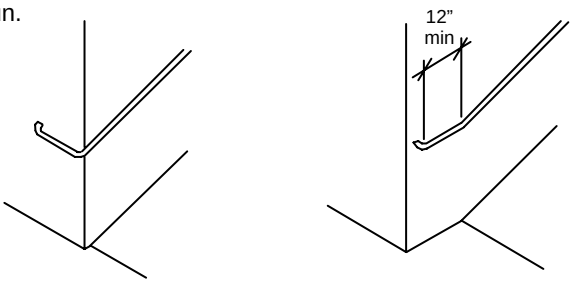 **Not Acceptable** Handrail at landing of ramp does NOT extend 12 inches minimum in the direction of the ramp run. **Acceptable** Handrail at landing of ramp extends 12 inches minimum in the direction of the ramp run.	CBC 1133B.5.5.1 ADA Stds 4.8.5(2) & ADA Stds Fig. 17	Ramp handrails Handrails NOTE: Top and bottom handrail extensions are important safety features for persons with mobility impairments and must extend in the direction of the ramp run to permit the intended use.
7.29	Handrail extension cannot extend into the required width of an adjacent route of travel. Relocate ramp or modify design.	CBC 1133B.3.1	Corridor and hallway widths
7.30	Handrail extensions must be parallel to landing surface.	ADA Stds 4.8.5(2) & ADA Stds Fig. 17	Handrails
7.31	Provide cane detectable rail portion below 27” AFF if portion of rail that is more than 27” AFF protrudes more than 4” into a perpendicular running circulation path.	CBC 1133B.8.6.1	Protruding objects - General
7.32	Return ends of handrail extension to wall, floor or post. 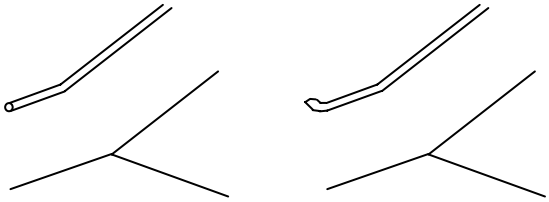 **Hazardous** Handrail extension does not terminate safely to the wall, the floor, or newel. **Compliant** Handrail extension end is returned to wall.	CBC 1133B.5.5.1	Handrails for ramps
7.33	Indicate gripping portion between 1-1/4" and 1-1/2” outside diameter, or provide shape with equivalent gripping surface (i.e. 4” to 6-1/4” perimeter, and 2-1/4" max in any direction).	CBC 1133B.5.5.1	Handrails for ramps <u>NOTE:</u> When using industry standard round steel handrails (1-1/2” nominally dimensioned) DSA may approve an actual outside diameter of 1-7/8” max.
7.34	Provide and indicate 1-1/2” clearance from adjacent obstruction (wall or guardrail).	ADA Stds 4.8.5(3) ADA Stds Fig. 39	Handrails

	Project designer (PD) shall address the following marked or circled items, and any additional plan review comments on drawings and specifications before scheduling a back check appointment for access compliance (AC). Any questions or points of disagreement must be resolved prior to back check by fax to plan reviewer (PR).	Justification / Reference or Code Citation	Headings / Comments / Notes & Examples
	Check List 7. ACCESSIBLE RAMPS		
7.35	Recess to be 3” deep maximum with 18” height, measured from the top of the handrail. 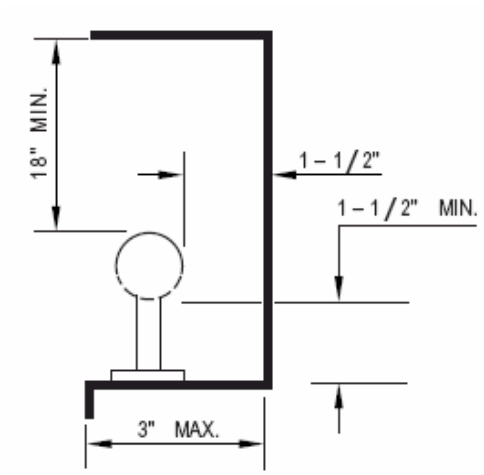	CBC 1133B.5.5.1	Handrails for ramps
7.36	All gripping surfaces must be smooth, with no sharp edges, continuous, without interruption by newel posts, and other construction elements, or obstructions.	CBC 1133B.5.5.1, ADA Stds 4.9.4(4) & ADA Stds 4.26	Handrails for ramps Handrails Handrails
7.37	Handrails and adjacent walls or other surfaces shall be free of any sharp or abrasive elements. Edges shall have a minimum radius of 1/8”.	ADA Stds4.26.4 CBC 1133B.5.5.1	Eliminating hazards Handrails for ramps
7.38	Provide guardrail, 42” high, as a vertical barrier along the open edges of ramps, platform, or landings to prevent persons from falling off the open edge if drop exceeds 30”.	CBC 1133B.5.7.1 & CBC 1133B.5.7.2	Guardrails Where required
7.39	Indicate that a sphere 4” in diameter cannot pass through any opening at guardrails (intermediate rails or an ornamental pattern).	CBC 1133B.5.7.4	Openings

© 2006 DSA/OUD

8	Project designer (PD) shall address the following marked or circled items, and any additional plan review comments on drawings and specifications before scheduling a back check appointment for access compliance (AC). Any questions or points of disagreement must be resolved prior to back check by fax to plan reviewer (PR).	Justification / Reference or Code Citation	Headings / Comments / Notes & Examples (as applicable)
	Check List 8. DOORS AND GATES		
8.1	For additional scoping requirements and exceptions see also applicable **DSA/AC Checklist 1.**		
8.2	Identify the following doors on plans and coordinate with numbers/characters in door schedule: **1.** All doors for new construction. **2.** All doors that are being altered in existing buildings. **3.** All doors in existing buildings that are in the accessible route of travel, including existing doors.	CBSC Part 1 4-317(b)	Plans
8.3	Include all doors in door schedule.	CBSC Part 1 4-317(b)	Plans
8.4	Provide the following information for each door in the door schedule: **1.** Door mark number/character. **2.** Room name/number. **3.** Width of door leaf or clear opening. **4.** Reference to sheet and detail for new or existing door types. **5.** Reference to sheet and detail for new or existing thresholds for exterior doors, and interior doors with special flooring transitions (gymnasium, rubber flooring, etc). **6.** Reference to sheet and detail for required signage including: tactile/Braille exit signs, restroom signs, entrance signs, identifying room signs, directional signs, etc. **7.** "Copy" of door signage. **8.** Hardware group for new doors or existing doors that are being altered.	CBSC Part 1 4-317(b)	Plans
8.5	Indicate either on plan or in schedule that existing door in the accessible route has accessible threshold, hardware, closer, and 10" smooth surface at bottom of push side (e.g. kick plate).	CBSC Part 1 4-317(b)	Plans
8.6	All entrances and ground floor exit doors must be made accessible. EXCEPTIONS: a. Exterior ground floor exits serving smoke–proof enclosures, stairwells and exit doors servicing stairs only. b. Exits in excess of those required by Section 1114B.2.1, and which are more than 24" above grade. Such doors shall have visual signs which indicate, by means of an arrow and/or text, the location of the nearest accessible exit. The warning sign shall comply with Section 1117B.5 and be mounted at a location so steps do not need to be retraced. c. In existing buildings, where DSA determines that compliance would create an unreasonable hardship, an	CBC 1133B.1.1.1.1	Entrances

	Project designer (PD) shall address the following marked or circled items, and any additional plan review comments on drawings and specifications before scheduling a back check appointment for access compliance (AC). Any questions or points of disagreement must be resolved prior to back check by fax to plan reviewer (PR).	Justification / Reference or Code Citation	Headings / Comments / Notes & Examples (as applicable)
	Check List 8. DOORS AND GATES		
	exception may be granted when equivalent facilitation is provided. Equivalent facilitation would require at least one entrance to be accessible.		
	d. In existing buildings where DSA determines that, due to legal or physical constraints, compliance with the height requirement or equivalent facilitation would create an unreasonable hardship.		NOTE: Jurisdictional findings and determinations are subject to an internal DSA appeals process.
8.7	All doors on an accessible path of travel must be made accessible.	CBC 1114B.1.1	Primary entry access
8.8	Revolving doors or turnstiles cannot be used as the only means of entrance and exit. Provide an accessible door adjacent, designed as to facilitate the same use pattern.	CBC 1133B.2.3.3 CBC 1133B.2.3.4 ADA Stds. 4.13.2	Revolving doors Turnstiles, rails and pedestrian controls Revolving doors and turnstiles
8.9	Provide and indicate door leafs to be 3' - 0" min (4' - 0" max) in width and 6' - 8" min in height.	CBC 1003.3.1.4 CBC 1133B.2.2	Door leaf width Doors - Width and height
8.10	Hinged door must open at least 90˚.	CBC 1133B.2.2	Hinged doors
8.11	Door must provide a clear opening of 32" when positioned at an angle of 90 degrees from the closed position (measured between the face of the door and the opposite stop). EXCEPTIONS: a. Doors not requiring full user passage, such as shallow closets (i.e., 24" or less in depth), may have the clear opening reduced to 20" minimum width.	CBC 1133B.2.2, CBC 1133B.2.3 ADA Stds. 4.13.5	Doors - Width and height Hinged doors Door width
8.12	In existing buildings, when a required exit is not accessible, provide sign to direct people to the nearest accessible exit or evacuation assistance area. The sign shall comply with CBC Section 1117B.5 and be mounted at a location so steps do not need to be retraced.	CBC 1117B.5 CBC 1117B.5.8.1.2 ADA Stds 4.1.2(7)(c)	Signs Entrance signs Building Signage
8.13	Provide clear opening width dimension.	CBSC Part 1 4-317(b)	Plans
8.14	At double doors, with or without mullion, automatic or manual, indicate clear opening width of one of the doors to be 32" min. 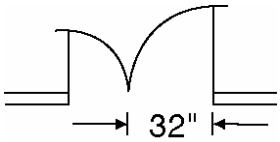	CBC 1133B.2.3.1 CBC 1133B.2.3.2 ADA Stds. 4.13.4	Pair of doors Automatic Doors Double-leaf doorways
8.15	Provide and indicate a clear and level (2% slope) landing on each side of door.	CBC 1133B.2.4.2	Maneuvering clearances at doors

	Project designer (PD) shall address the following marked or circled items, and any additional plan review comments on drawings and specifications before scheduling a back check appointment for access compliance (AC). Any questions or points of disagreement must be resolved prior to back check by fax to plan reviewer (PR).	Justification / Reference or Code Citation	Headings / Comments / Notes & Examples (as applicable)
	Check List 8. DOORS AND GATES		
8.16	Provide and indicate the following maneuvering clearances and level landings at door: **1.** Front approach to pull side of door must have maneuvering space that extends 24” min at exterior doors (18” min at interior doors) beyond the latch side of the door and 60” min perpendicular to the doorway. **2.** Front approach to push side of door, equipped with closer and latch, must have maneuvering space that extends 12” min beyond the latch side of the door and 48” min perpendicular to the doorway. **3.** Front approach to push side of door, not equipped with latch and closer, must have maneuvering space that is the same width as door opening and extends 48” min perpendicular to the doorway. **4.** Hinge-side approach to pull side of door must have maneuvering space that extends 36” min beyond the latch side of the door and 60” min perpendicular to the doorway. **5.** Hinge-side approach to push side of door, not equipped with latch and closer, must have a maneuvering space of 54” min parallel to the doorway and 44” min perpendicular to the doorway. **6.** Hinge side approach to push side of door, equipped with latch and closer, must have maneuvering space of 54” min parallel to the doorway and 48” min perpendicular to the doorway. **7.** Latch-side approach to pull side of door must have maneuvering space that extends 24” min beyond the latch side of the door and 60” min perpendicular to the doorway. **8.** Latch-side approach to push side of door, with closers, must have maneuvering space that extends 24” min parallel to the doorway beyond the latch side of the door and 48” min perpendicular to the doorway. **9.** Latch-side approach to push side of door, not equipped with closers, must have maneuvering space that extends 24” min parallel to the doorway beyond the latch side of the door and 44” min perpendicular to the doorway.	CBC Fig. 11B-26A & CBC Fig. 11B-26B	Level maneuvering clearances at doors
8.17	When a door is located in a recess or alcove and the plane of the doorway is offset 8” or more from any obstruction within 18”, measured laterally on the latch side, the door shall be provided with maneuvering clearance for front approach.	CBC 1133B.2.4.5 CBC 1133B.2.5.3 CBC Fig. 11B-33(a)	Closer effort to operate doors - Recessed doors Clear door width and depth - Pull side

© 2006 DSA/OUD

Project designer (PD) shall address the following marked or circled items, and any additional plan review comments on drawings and specifications before scheduling a back check appointment for access compliance (AC). Any questions or points of disagreement must be resolved prior to back check by fax to plan reviewer (PR).

Check List 8. DOORS AND GATES

		Justification / Reference or Code Citation	Headings / Comments / Notes & Examples (as applicable)
8.18	Level difference at landing/threshold transition between 1/4" and 1/2" must be beveled at 1:2.	CBC 1133B.2.4.1	Floor level at doors - Thresholds
8.19	Indicate level difference between top of threshold and door landing to be 1/2" max (if beveled at 1:2).	CBC 1133B.2.4.1	Floor level at doors - Thresholds
8.20	Indicate level difference between interior and exterior door landing to be 1/2" max (if beveled at 1:2).	CBC 1133B.2.4.1	Floor level at doors - Thresholds
8.21	In existing projects, level differences at landing/threshold transitions greater than 1/2" shall be accomplished by means of ramps or sloped walking surfaces and must include required level landings.	CBC 1133B.2.4.1 & CBC 1133B.5.1	Floor level at doors - Thresholds Ramps - General
8.22	Recessed doormats, grills, and carpets must be adequately anchored to prevent interference with wheelchair traffic.	CBC 1133B.1.1.1.3	Entrances - Recessed doormats

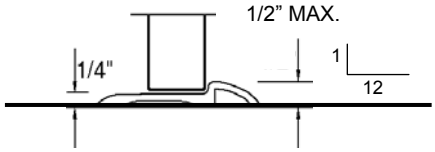

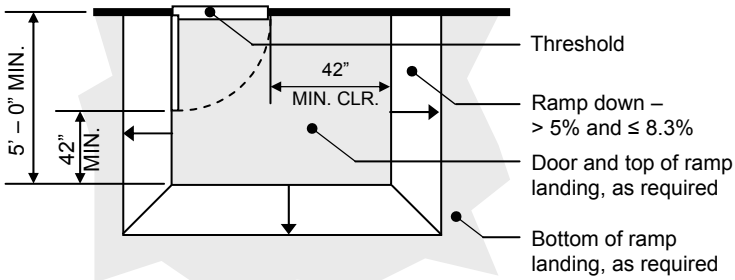

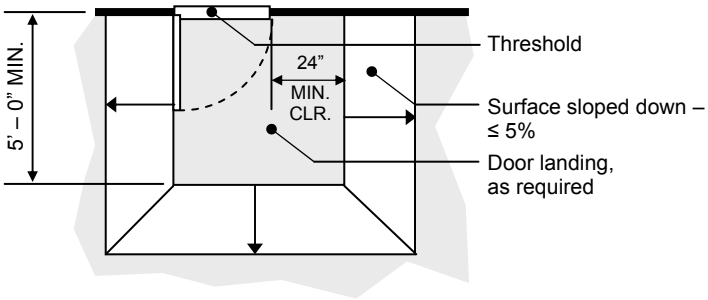

NOTE:
Handrails are not required on ramps at exterior door landings with less than 6" rise and 72" in length (CBC 1133B.5.5.1, ADAAG 4.8.5).

© 2006 DSA/OUD

8	Project designer (PD) shall address the following marked or circled items, and any additional plan review comments on drawings and specifications before scheduling a back check appointment for access compliance (AC). Any questions or points of disagreement must be resolved prior to back check by fax to plan reviewer (PR).	Justification / Reference or Code Citation	Headings / Comments / Notes & Examples (as applicable)

Check List 8. DOORS AND GATES

DOOR HARDWARE			
8.23	Provide adjustable door closers at doors with closers.	CBC 1133B.2.5.1	Door closer
8.24	If door closers are used, indicate maximum effort to operate doors either in drawings or specifications: **1.** 5 lbf max for interior doors. **2.** 5 lbf max for exterior doors.	CBC 1133B.2.5	Closer-effort to operate doors
8.25	At fire doors or rated doors provide the following note: "The Authority having Jurisdiction may increase the maximum effort to operate fire doors in order to achieve positive latching, but not exceeding the 15 lbf max."	CBC 1133B.2.5	Closer-effort to operate doors
8.26	Push button to operate automatic or power-assisted door must be located in an accessible location that is adjacent to or part of the general accessible route of travel; visible and easily recognizable from the main approach; and so that the clear floor or ground space in front of the button is outside any door swing.		
8.27	Indicate height of push button to operate power-assisted door to be between 15" and 48" AFF for forward approach / forward reach or between 9" and 54" AFF for parallel approach / side reach.	CBC 1117B.6 #3 CBC 1118B.5 CBC 1118B.6	Controls and operating mechanisms - Height Forward reach Side reach

© 2006 DSA/OUD

	Project designer (PD) shall address the following marked or circled items, and any additional plan review comments on drawings and specifications before scheduling a back check appointment for access compliance (AC). Any questions or points of disagreement must be resolved prior to back check by fax to plan reviewer (PR).	Justification / Reference or Code Citation	Headings / Comments / Notes & Examples (as applicable)
	Check List 8. DOORS AND GATES		
8.28	Indicate mounting height of hand-activated door hardware, including all dead bolts, between 30” and 44” AFF (36” preferred).	CBC 1133B.2.5.2	Closer-effort to operate doors
8.29	Deadbolts are not permitted unless operable with single effort by lever-type hardware.	CBC 1003.3.1.8 CBC 1117B.6 CBC 1133B.2.5.2	Type of lock or latch Controls and Operating Mechanisms - Operation
8.30	Provide note or detail indicating floor-mounted doorstops and similar obstructions to be installed 4” max from the face of the wall or partition.	DSA Policy #99-08	
8.31	Indicate smooth, uninterrupted surface at the bottom 10” of push side of door leaf.	CBC 1133B.2.6	Smooth surface
8.32	Provide a 10” high kick plate cover at the bottom of the push side of narrow frame doors.	CBC 1133B.2.6	Smooth surface
8.33	Provide a 10” high kick plate cover at the bottom of doors where hardware is surface-mounted (i.e. exposed rod for panic device).	CBC 1133B.2.6	Smooth surface
8.34	For accessible doors requiring security, provide door lock system that does not require any pinching, twisting or grasping. (i.e. proximity reader type electronic lock.)	CBC 1003.3.1.8 CBC 1117B.6	Type of lock or latch Controls and Operating Mechanisms - Operation
GATES			
8.35	All gates intended for pedestrian use, including ticket gates, must comply with all applicable requirements of doors (see items above).	CBC 1133B.1.1.1.4 ADA Stds. 4.13.3	Gates Gates
8.36	Identify gate with a mark on plans and include in door schedule.	CBSC Part 1 4-317(b)	Plans
8.37	Provide and indicate accessible operating hardware and 10” high smooth surface at bottom of gate.	CBC 1133B.1.1.1.4 CBC 1133B.2.6	Gates Smooth surface
8.38	Gate on required exit path must comply with exit door and hardware requirements.	CBC 1133B.1.1.1.4	Gates

© 2006 DSA/OUD

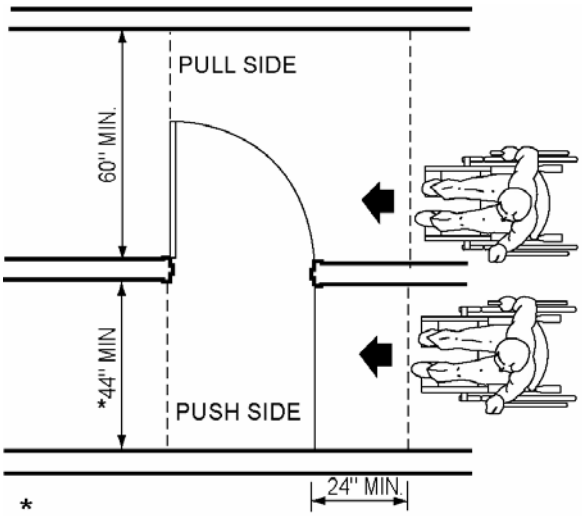

*
NOTE:
48" **MINIMUM** IF DOOR
HAS A CLOSER

LATCH APPROACH

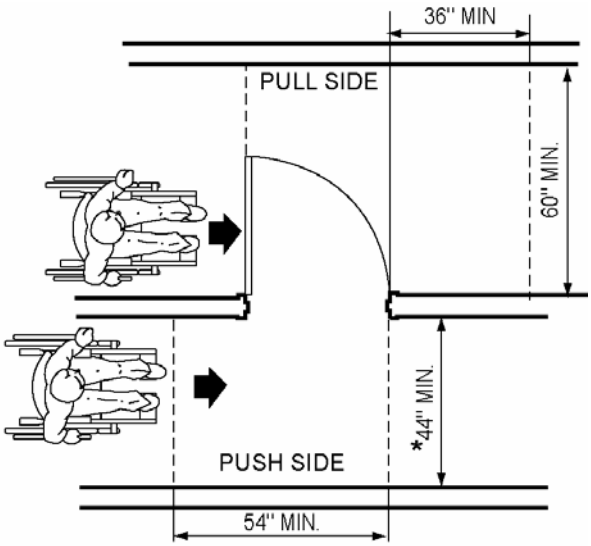

*
NOTE:
48" MINIMUM IF DOOR
HAS BOTH A LATCH
AND A CLOSER

HINGE APPROACH

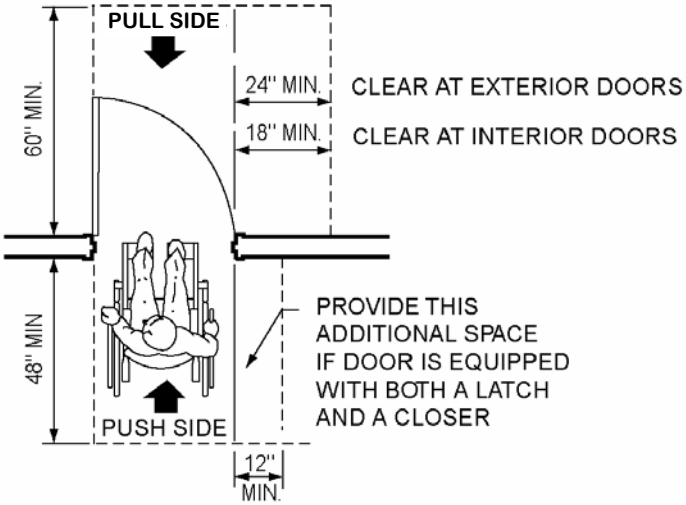

FRONT APPROACH

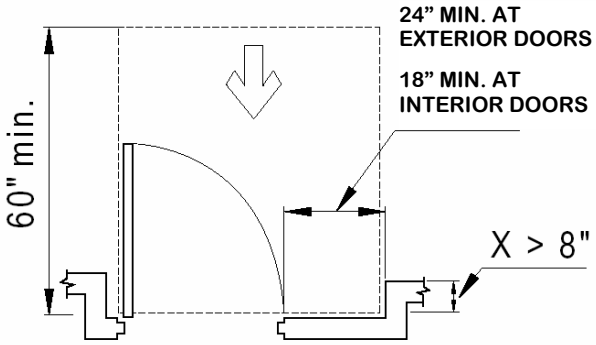

ALCOVE CONDITION

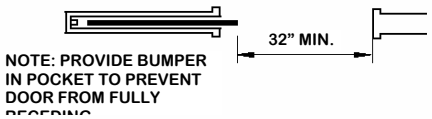

NOTE: PROVIDE BUMPER IN POCKET TO PREVENT DOOR FROM FULLY RECEDING

CLEARANCE AT SLIDING DOORS

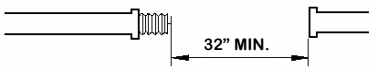

CLEARANCE AT FOLDING DOORS

Fig 8-A. Door Maneuvering Clearances and Landings

© 2006 DSA/OUD

9	Project designer (PD) shall address the following marked or circled items, and any additional plan review comments on drawings and specifications before scheduling a back check appointment for access compliance (AC). Any questions or points of disagreement must be resolved prior to back check by fax to plan reviewer (PR).	Justification / Reference or Code Citation	Headings / Comments / Notes & Examples
	Check List 9. CORRIDORS, HALLWAYS, AND VESTIBULES		
9.1	For additional scoping requirements and exceptions see also applicable **DSA/AC Checklist 1.**		
CORRIDORS, HALLWAYS, EXTERIOR EXIT BALCONIES		CBC 1133B.3	
9.2	All corridors, hallways, and exterior exit balconies must be made accessible.	CBC 1133B.3, CBC 1114B.1.1	Corridors, hallways and exterior exit balconies Facility accessibility-general
	EXCEPTIONS:		
	a. In existing buildings, when area is not part of the planned alteration or part of the required path of travel to the area of alteration.		
	b. Corridors, hallways, and exterior exit balconies on floors or portions of floors not customarily occupied, including non-occupiable or employee spaces accessed <u>only</u> by ladders, catwalks, crawl spaces, very narrow passageways, and frequented only by service personnel for repair or maintenance purposes: such spaces as elevator pits and elevator penthouses, piping and equipment catwalks and machinery rooms need not be accessible.	CBC 1103B.1	Building accessibility - General
9.3	Provide and indicate clear widths as follows:		
	1. 36” min if occupancy load is <10.	CBC 1133B.3.1	Corridor and hallway widths
	2. 44” min if occupancy load is 10 or more.	CBC 1133B.3.1	Corridor and hallway widths
	3. 60” min if corridor, hallway, or exterior exit balcony exceeds 200’ in length without a passing space, measuring 60” x 60” min at intervals of 200 feet min. A T-intersection of two corridors or walks is an acceptable passing space.	CBC 1133B.3.2 & ADA Stds 4.3.4	Corridors and hallways over 200’ Passing space
	EXCEPTIONS:		
	a. In existing buildings, where DSA determines that compliance would create an unreasonable hardship, an exception may be granted when equivalent facilitation is provided.		
	b. In existing buildings where DSA determines that, due to legal or physical constraints, compliance with building standards requirements or equivalent facilitation would create an unreasonable hardship.		<u>NOTE:</u> Jurisdictional findings and determinations for exception b are subject to an internal DSA appeals process.
9.4	Corridor, hallway, or exterior exit balcony in Group E, Div. 1 occupancy (K-12 facilities), serving an occupancy load of 100 or more must be 72” min wide.	CBC 1007.3.5	Hallways, corridors, and exterior exit balconies
9.5	Corridor, hallway, or exterior exit balcony in Group E, Div. 1 occupancy (K-12 facilities), serving an occupancy load of less than 100 must be 44” min wide.	CBC 1007.3.5 - Exception	Hallways, corridors, and exterior exit balconies
9.6	If corridor, hallway, or exterior exit balcony slopes more than 5%, indicate compliance with all requirements for ramps.	CBC 1120B.1 & CBC 1133B.5	Floors and levels Ramps

© 2006 DSA/OUD

Project designer (PD) shall address the following marked or circled items, and any additional plan review comments on drawings and specifications before scheduling a back check appointment for access compliance (AC). Any questions or points of disagreement must be resolved prior to back check by fax to plan reviewer (PR).	Justification / Reference or Code Citation	Headings / Comments / Notes & Examples

Check List 9. CORRIDORS, HALLWAYS, AND VESTIBULES

9.7	Provide and indicate required maneuvering space at the following conditions:		
	1. When turning around an obstruction.	CBC Fig. 11B-5E (a) & (d)	Width of accessible route NOTE: * If occupancy load is 10 or more, the minimum width of all dimensions must be increased to 44” min.
	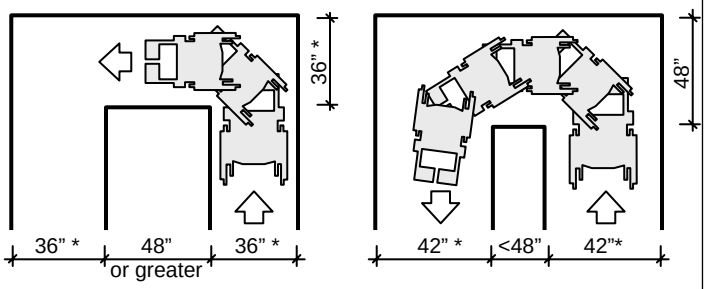		
	2. Wherever a person using a wheelchair may have to make a 180˚ turn.		
	3. At doors and gates. **4.** To access elements or equipment.	CBC Figs. 11B-26A & & 11B-26B	Level maneuvering clearances at doors
9.8	Wall mounted object(s) with bottom edge(s) between 27” and 80” above the ground shall not protrude more than 4” into pedestrian circulation area.	CBC 1133B.8.6 & CBC Fig. 11B-7A	Protruding objects
	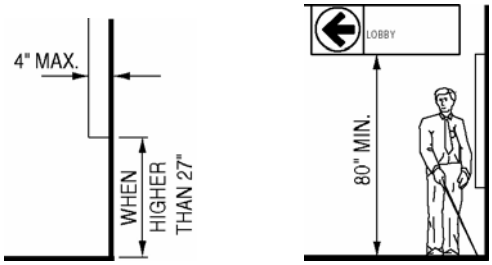	CBC Fig 11B-12	Wheelchair turning space
9.9	Dead end corridor, hallway, or exterior exit balcony cannot exceed 20’ in length when more than one (1) exit is required by CBC Table 10-A.	CBC 1004.2.6, CBC 1005.3.4.6 & CBC 1006.2.2	Dead ends Dead ends Access to grade
9.10	Provide guardrail, 42” high, as a vertical barrier along the open edges of corridor, hallway, or exterior exit balcony to prevent persons from falling off the open edge if drop exceeds 30”.	CBC 1133B.5.7.2	Guardrails - Where required NOTE: See CBC Section 509 for definition of guardrail.
VESTIBULES			
9.11	Indicate and provide 48” min between two hinged or pivoted doors plus the width of any door(s) swinging into the space.	CBC 1133B.2.4.4, CBC Fig. 11B-30 & ADA Stds 4.13.7	Maneuvering clearances at doors Vestibule Two doors in series
9.12	Doors in series must swing either in the same direction or away from the space between the doors.	CBC 1133B.2.4.4, CBC Fig. 11B-30, & ADA Stds 4.13.7	Maneuvering clearances at doors Vestibule Two doors in series
9.13	At door openings at adjacent walls, provide and indicate a 30” x 48” minimum clear floor space in the vestibule and outside the area of the door swing.	CBC Fig. 11B-31(a)	Vestibule - Doors at adjacent walls

© 2006 DSA/OUD

10	Project designer (PD) shall address the following marked or circled items, and any additional plan review comments on drawings and specifications before scheduling a back check appointment for access compliance (AC). Any questions or points of disagreement must be resolved prior to back check by fax to plan reviewer (PR).	Justification / Reference or Code Citation	Headings / Comments / Notes & Examples
	Check List 10. STAIRS AND STEPS		
10.1	All stairs, stairways, and steps must be accessible.	CBC 1114B.1.1 CBC 1133B.4	Facility accessibility - General Stairways
	EXCEPTIONS:		
	a. In existing buildings, when stairs are not part of the planned alteration and vertical access is provided through elevators, lifts or ramps, stairways need not be accessible.	CBC 1134B.2.1 ADA Stds. 4.1.6(d)	Accessibility for existing buildings Accessible buildings - Alterations
	b. Stairs to floors or portions of floors not customarily occupied, including non-occupiable or employee spaces accessed only by ladders, catwalks, crawl spaces, very narrow passageways, and frequented only by service personnel for repair or maintenance purposes: such spaces as elevator pits and elevator penthouses, piping and equipment catwalks and machinery rooms need not be accessible with the exception of stair striping.	CBC 1103B.1 - Exception 2	Building accessibility – General NOTE: All vertical level changes, exceeding 1/4" in height (or 1/2" if beveled at 1:2), and within a pedestrian circulation area are considered stairs or steps, with the exception of curbs that border vehicular ways.
10.2	Stair treads and risers must comply with the following:		
	1. Treads must be uniform and not less than 11" deep.	CBC 1133B.4.5.3	Treads, nosing and risers - Open risers are not permitted
	2. Risers must be closed.		
	EXCEPTIONS:		
	a. In existing buildings, where DSA determines that compliance would create an unreasonable hardship, an exception may be granted when equivalent facilitation is provided.		
	b. In existing buildings where DSA determines that, due to legal or physical constraints, compliance with building standards or equivalent facilitation would create an unreasonable hardship.		NOTE: Jurisdictional findings and determinations for exception (b) are subject to an internal DSA appeals process.
	3. Risers must be uniform, and shall not be less than 4" nor more than 7" high.	CBC 1003.3.3.3	Rise and run
10.3	Stair nosing must comply with the following:	CBC 1133B.4.5	Treads, nosing and risers
	1. 1/2" max radius of curvature at leading edge of tread.	ADA Stds. 4.9.3	Nosings
	2. Nosings that project beyond vertical risers must have the underside of the leading edge curved or beveled 60 degrees.	CBC 1133B.4.5.3 CBC Fig. 11B-35	Open risers are not permitted Stairs
	3. If not vertical, risers must slope under the tread at an angle of 60 degrees min from the horizontal.	CBC 1133B.4.5.3 CBC Fig. 11B-35	Open risers are not permitted Stairs
	4. Maximum permitted projection of the nosing is 1-1/2".	CBC 1133B.4.5.2 CBC Fig. 11B-35	Nosing Warning striping and handrail extensions - Stairs

© 2006 DSA/OUD

	Project designer (PD) shall address the following marked or circled items, and any additional plan review comments on drawings and specifications before scheduling a back check appointment for access compliance (AC). Any questions or points of disagreement must be resolved prior to back check by fax to plan reviewer (PR).	Justification / Reference or Code Citation	Headings / Comments / Notes & Examples

Check List 10. STAIRS AND STEPS

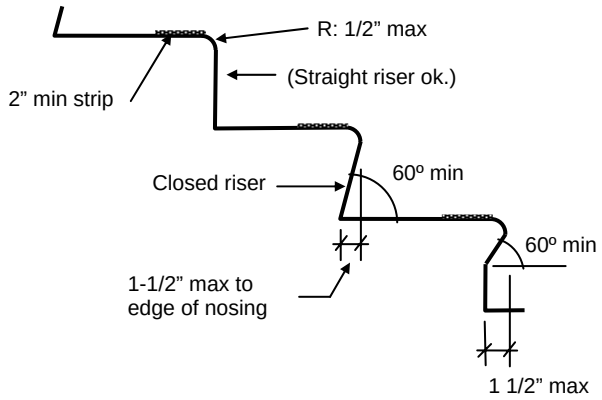

10.4	Provide detail of color contrasting striping at all stairs and steps within the pedestrian circulation area. Indicate the following: **1.** Upper approach and all treads of exterior stairs must have a 2" min wide strip of contrasting color. **2.** Upper approach and lower tread of interior stairs must have a 2" min wide strip of contrasting color. **3.** Contrasting color strip to be 1" max from the front edge of the step or landing.	CBC 1133B.4.4 CBC Fig. 11B-35	Striping for the visually impaired Warning striping and handrail extensions
10.5	Provide and indicate width of stairway to be 44" min, or 36" min if serving an occupancy load of <50.	CBC 1003.3.3.2	Stairways - Width
	EXCEPTION:		
	Stairways adjacent to or serving an area of rescue assistance must be 48" min clear between handrails.	CBC 1114B.2.2.3 ADA Stds. 4.3.11.3	Adjacent stairway width Areas of rescue assistance – Stairway width
10.6	Indicate top and bottom landing to be level and have a dimension in the direction of travel not less than the width of the stairway.	CBC 1003.3.3.5	Stairways - Landings
	EXCEPTIONS:		
	a. Exterior landings may slope 2% max in any direction.	CBC 1003.3.3.5	Stairways – Landings
	b. At straight stair runs the landing may be 44" long.		
	c. Provide additional space where landings serve as areas of evacuation assistance.	CBC 1114B.2.2.2	Areas for evacuation assistance - Size
10.7	Increase stair landing dimensions to accommodate required maneuvering space for doors.	CBC 1133B.2.4.2	Maneuvering clearances at doors
10.8	Indicate clear headroom of 6' - 8" min at stairs and landings.	CBC 1003.3.3.4	Head room
10.9	When staircase underside creates a hazardous overhead obstruction, provide cane-detectable barrier to warn blind or visually impaired.	ADA Stds. 4.4.2 ADA Stds. Fig. 8 (c-1)	Head room

© 2006 DSA/OUD

	Project designer (PD) shall address the following marked or circled items, and any additional plan review comments on drawings and specifications before scheduling a back check appointment for access compliance (AC). Any questions or points of disagreement must be resolved prior to back check by fax to plan reviewer (PR).	Justification / Reference or Code Citation	Headings / Comments / Notes & Examples
	Check List 10. STAIRS AND STEPS		
10.10	Provide and indicate location of tactile stair level identification. See **Checklist 17** for additional requirements.	CBC 1133B.4.3	Tactile stair level identification sign
HANDRAILS FOR STAIRS			
10.11	Provide handrails on both sides of stairs.	CBC 1133B.4.1.1 DSA Policy 96-10	Required handrails Handrails at steps
	EXCEPTIONS:		
	a. Stairs located immediately adjacent to fixed seating in assembly areas.	CBC 1008.5.6	Stairways
	b. In existing facilities where: ▪ stairs are not within the specific area of alteration, and ▪ stairs are not part of the required path of travel.	CBC 1134B.2.1	Accessibility for existing buildings
10.12	Provide an intermediate handrail at stairs required to be more than 88” wide with not less than one intermediate handrail for each 88 inches of required width.	CBC 1133B.4.1.1	Required handrails
10.13	Design to provide continuous handrails on the full length of the stair run.	ADA Stds. 4.9.4(1)	Handrails
10.14	Design to provide continuous inside handrails at intermediate landings.	CBC 1133B.4.2.4	Handrail configuration
10.15	Top of gripping surface of handrail must be between 34” and 38” AFF.	CBC 1133B.4.2.1 ADA Stds. 4.9.4(5)	Handrail configuration
10.16	Indicate a specific height from front edge of nosing to top of handrail gripping surface.	CBC 1133B.4.2.1	Handrail configuration
10.17	Extend handrail 12” beyond the top of the stair run and parallel to the landing surface.	CBC 1133B.4.2.2 ADA Stds. Fig. 19(d)	Handrail configuration Stair Handrails - Extension at top of run
10.18	Extend handrail 12” plus the width of one tread beyond the bottom riser. The handrail must continue to slope for a distance of the width of one tread and the remainder of the extension must be parallel to the landing surface.	CBC 1133B.4.2.2 ADA Stds. Fig. 19(c)	Handrail configuration Stair Handrails - Extension at bottom of run
10.19	Handrail extension cannot extend into the required width of an adjacent route of travel or the required width of an exit discharge component.	CBC 1004.3.3.2	Hallways - Width

© 2006 DSA/OUD

Project designer (PD) shall address the following marked or circled items, and any additional plan review comments on drawings and specifications before scheduling a back check appointment for access compliance (AC). Any questions or points of disagreement must be resolved prior to back check by fax to plan reviewer (PR).

Check List 10. STAIRS AND STEPS

		Justification / Reference or Code Citation	Headings / Comments / Notes & Examples
10.20	Handrail extensions must meet the following requirements: **1.** Handrail extensions must extend in the direction of the stair run. **2.** Return ends of handrail extension to wall, floor or post.	CBC 1133B.4.2.2	Handrail configuration
	EXCEPTIONS: a. In existing buildings, where DSA determines that compliance would create an unreasonable hardship, an exception may be granted when equivalent facilitation is provided.	CBC 1133B.4.2.6.1 ADA Stds. 4.1.6(3)(b)	Stairways - Handrail configuration Alterations - Stairs
	b. In existing buildings where DSA determines that, due to legal or physical constraints, compliance with building standards or equivalent facilitation would create an unreasonable hardship.		NOTE: Jurisdictional findings and determinations for exception (b) are subject to an internal DSA appeals process.
	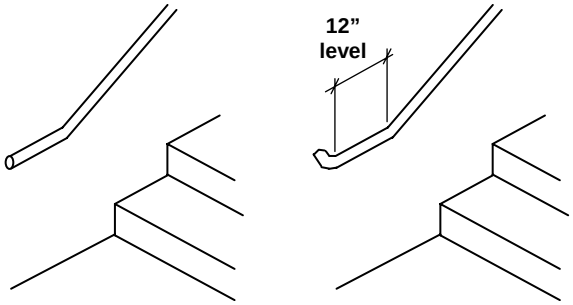 **Hazardous** Handrail extension does not terminate safely to the wall, the floor, or newel. **Compliant** Handrail extension end is returned to wall.		NOTE: Top and bottom handrail extensions are important safety features for people with balance problems and must therefore extend in the direction of the stair run.
10.21	Indicate gripping portion between 1-1/4" and 1-1/2” in cross sectional nominal dimension or the shape shall provide an equivalent gripping surface (i.e. 4” to 6-1/4” perimeter, and 2-1/4" max in any direction.	CBC 1133B.4.2.6.1	Handgrips NOTE: When using industry standard steel handrails (nominally dimensioned) DSA may approve an actual outside diameter of 1-7/8” max.
10.22	All gripping surfaces and adjacent wall or other surface must be smooth with no sharp edges, and continuous, without interruption by newel posts, other construction elements, or obstructions. Edges shall have a minimum radius of 1/8”.	CBC 1133B.4.2.6.1 ADA Stds. 4.9.4	Handgrips Handrails
10.23	Provide and indicate 1-1/2” absolute clearance from adjacent obstruction (wall or guardrail).	CBC 1133B.4.2.5	Handrail configuration
10.24	Recess to be 3” deep maximum with a minimum 18” height, measured from the top of the handrail.	CBC 1133B.4.2.5 CBC Fig. 11B-36	Stairways - Handrail configuration Stair handrails

© 2006 DSA/OUD

	Project designer (PD) shall address the following marked or circled items, and any additional plan review comments on drawings and specifications before scheduling a back check appointment for access compliance (AC). Any questions or points of disagreement must be resolved prior to back check by fax to plan reviewer (PR).	Justification / Reference or Code Citation	Headings / Comments / Notes & Examples
	Check List 10. STAIRS AND STEPS		
	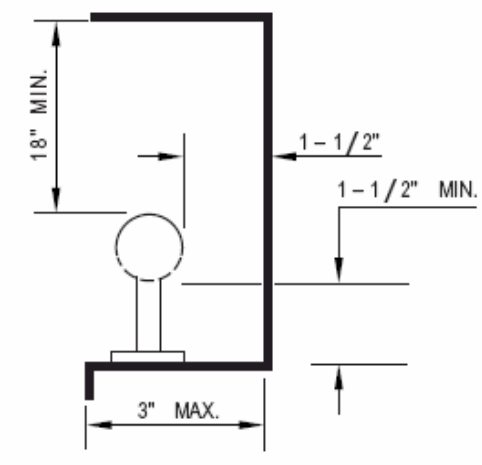		
10.25	Provide guardrail, 42” min high, as a vertical barrier along the open edges of stairs, platform, or landings to prevent persons from falling off the open edge if drop exceeds 30”.	CBC 509 CBC 509.2	Guardrails Guardrails - Height
10.26	Indicate that a sphere 4” in diameter cannot pass through any opening at guardrails (intermediate rails or an ornamental pattern).	CBC 509.3	Guardrails - Openings

© 2006 DSA/OUD

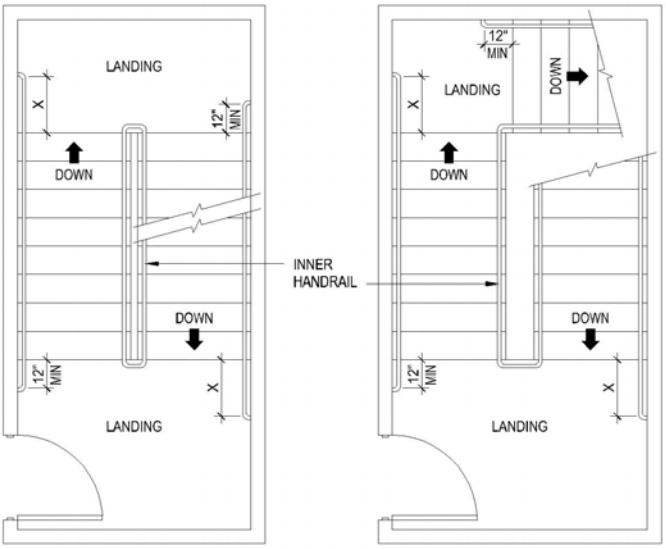

NOTE: INNER HANDRAIL AT LANDINGS OF STAIRS THAT DOUBLE BACK OR IMMEDIATELY TURN SHALL BE CONTI-NUOS AND SHALL NOT EXTEND INTO LANDING OR PATH OF TRAVEL.

X: EXTENSION OF HANDRAIL SHALL BE EQUAL TO THE TREAD WIDTH PLUS 12 INCHES.

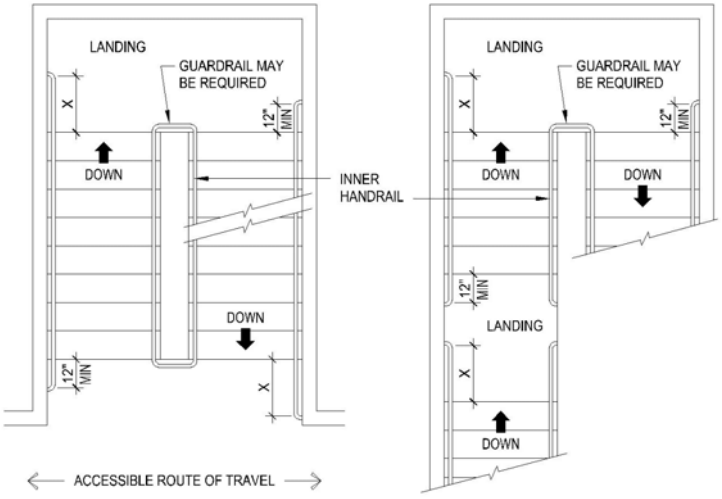

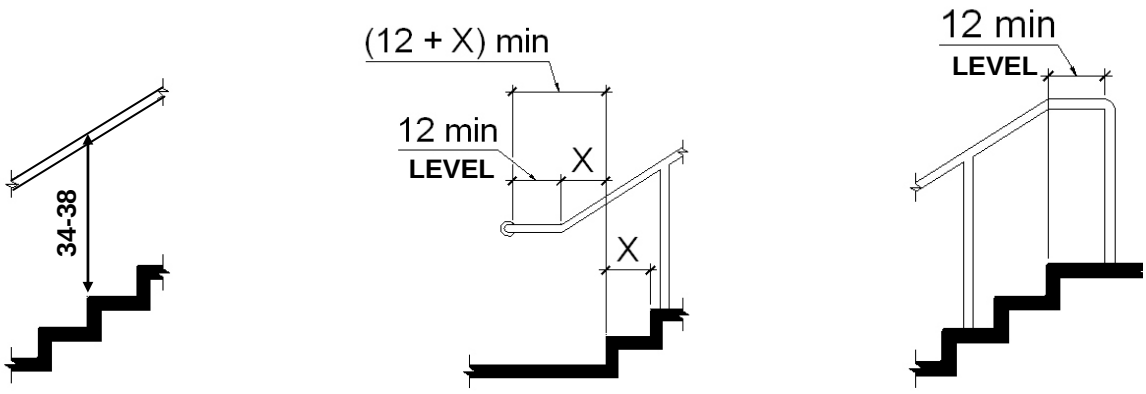

Fig 10-A. Requirements for Stairs and Stair Handrails

All dimensions are inches, u.o.n.

© 2006 DSA/OUD

11	Project designer (PD) shall address the following marked or circled items, and any additional plan review comments on drawings and specifications before scheduling a back check appointment for access compliance (AC). Any questions or points of disagreement must be resolved prior to back check by fax to plan reviewer (PR).	Justification / Reference or Code Citation	Headings / Comments / Notes & Examples
	Check List 11. ELEVATORS AND AREAS OF EVACUATION ASSISTANCE		
11.1	For additional scoping requirements and exceptions see also applicable **DSA/AC Checklist 1.**		
ELEVATORS		CBC 1116B	Elevators and special access (wheelchair) lifts
11.2	Provide automatic passenger elevator to serve each level (including floors, stories, split levels, platforms, podiums, sunken areas, balconies, roof gardens, and mezzanines) in a facility that is constructed by, on behalf of, or for the use of a public entity. EXCEPTIONS: a. Floors or portions of floors not customarily occupied, including, but not limited to, non-occupiable or employee spaces accessed <u>only</u> by ladders, catwalks, crawl spaces, very narrow passageways or freight (non-passenger) elevators, and frequented only by service personnel for repair or maintenance purposes: such spaces as elevator pits and elevator penthouses, piping and equipment catwalks and machinery rooms.	CBC 1103B.1, CBC 1114B.1.2, CBC 1120B.1, ADA Stds 4.1.3(5), & 28 CFR 35.151(a)&(b)	Building accessibility - General Accessible route of travel Floors within each story Accessible buildings: New construction New construction and alterations <u>DEFINITION:</u> Health & Safety Code §19955.3 STORY: A portion of a building included between the upper surface of any floor and the upper surface of the floor next above, except that the topmost story shall be that portion of a building included between the upper surface of the topmost floor and the ceiling or roof above. If the finished floor level directly above a basement or unused under-floor space is more than six feet above grade for more than 50 percent of the total perimeter or is more than 12 feet above grade at any point, the basement or unused under-floor space shall be considered as a story.
	b. When an existing theater is subdivided into more than one facility having upper levels not accessible by ramp or elevator, and DSA determines that full compliance with this code would create an unreasonable hardship, upper levels need not be made accessible, provided all facilities at grade are accessible and any event, showing of motion pictures or other activities made available to the public in all of the facilities are scheduled to ensure that all such functions are available to the public in the accessible facility.	CBC 1104B.3.1 - Exception 2	Seating <u>DEFINITION</u>: Health & Safety Code §19955.3 MEZZANINE: An intermediate floor placed in any story or room. When the total area of any "mezzanine floor" exceeds 33.3 % of the total floor area in that room, it shall be considered as constituting an additional "story".
	c. Ramps may be provided in lieu of elevators.	CBC 1103B.1 & ADA Stds 4.1.3(5) - Exception 3	General Accessible buildings: New construction
	d. Special access wheelchair lifts may be approved by DSA between levels in lieu of passenger elevators (see **Checklist 12** for wheelchair lift requirements).	CBC 1116B.2	Special access (wheelchair) lifts
	e. In existing buildings, other than dining banquet and bar facilities, when DSA determines that compliance would create an unreasonable hardship, an exception may be granted when equivalent facilitation is provided.	CBC 1120B.1 - Exception 1	Floors within each story
	f. In existing dining, banquet and bar facilities, when DSA determines that compliance would create an unreasonable hardship, an exception may be granted provided that a minimum of 75 percent of the dining, banquet and bar is on a common level throughout or connected by pedestrian ramps, passenger elevators or special lifts.	CBC 1120B.1 - Exception 2	Floors within each story

© 2006 DSA/OUD

Project designer (PD) shall address the following marked or circled items, and any additional plan review comments on drawings and specifications before scheduling a back check appointment for access compliance (AC). Any questions or points of disagreement must be resolved prior to back check by fax to plan reviewer (PR).	Justification / Reference or Code Citation	Headings / Comments / Notes & Examples
Check List 11. ELEVATORS AND AREAS OF EVACUATION ASSISTANCE		
g. In existing buildings, when legal or physical constraints would not allow compliance with this section or equivalent facilitation without creating an unreasonable hardship.	CBC 1120B.1 - Exception 3	Floors within each story NOTE: Jurisdictional findings and determinations for exception (g) are subject to an internal DSA appeals process.
h. Private facilities that have less than three stories or less than 3,000 sq. ft. per story, unless the building is a shopping center, a shopping mall, or the professional office of a health care provider.	CBC 1103B.1 - Exception 3.2	Building accessibility - General NOTE: Exception (h) does not apply to privately funded facilities that are intended for use by a public entity.
11.3 Indicate compliance of existing elevator and provide DSA application number.	CBSC Part 1 4-317(b)	Plans
11.4 Indicate location of all elevators on each site and floor plan with an appropriate symbol (X).	CBSC Part 1 4-317(b)	Plans
11.5 Where more than one elevator is provided, all elevators must be made accessible.	CBC 1114B.1.2	Accessible route of travel
11.6 Freight elevators are not considered as meeting the accessibility requirements unless the only elevators provided are used as combination passenger and freight elevators for the public and employees.	ADA Stds 4.10.1	Elevators - General
11.7 In new construction of buildings where elevators are required, and which exceed 10,000 square feet on any floor, accessible means of vertical access shall be provided within 200 feet of each stairs and each escalator.	CBC 1103B.1	Building accessibility - General
EXCEPTION: Stairs solely used for emergency egress.	CBC 1103B.1 Exception 1	Building accessibility – General
11.8 In existing buildings where elevators are required, and which exceed 10,000 square feet on any floor, and where newly constructed means of vertical access is provided via stairs or escalator, an accessible means of vertical access shall be provided within 200 feet of each new stairs or escalator.	CBC 1103B.1	Building accessibility - General
EXCEPTION: Stairs solely used for emergency egress.	CBC 1103B.1 Exception 1	Building accessibility – General
11.9 Indicate height of centerline of call button in elevator lobby or hall to be 42” nominal AFF.	CBC 1116B.1.13, CBC Fig. 11B-40C & ADA Stds 4.10.3	Hall buttons Hoistway and elevator entrances Hall call buttons
11.10 Indicate call button to be 3/4" min in the smallest dimension, and to be either raised or flush.	CBC 1116B.1.13 & ADA Stds 4.10.3	Hall buttons Hall call buttons
11.11 Indicate centerline of visual hall lantern fixtures to be a minimum 72” o.c. AFF, 2-1/2" min in the smallest dimension, and visible from the vicinity of the hall call button.	CBC 1116B.1.14 & CBC Fig. 11B-40C ADA Stds 4.10.4	Hall lantern Hoistway and elevator entrances Hall lanterns

© 2006 DSA/OUD

Project designer (PD) shall address the following marked or circled items, and any additional plan review comments on drawings and specifications before scheduling a back check appointment for access compliance (AC). Any questions or points of disagreement must be resolved prior to back check by fax to plan reviewer (PR).	Justification / Reference or Code Citation	Headings / Comments / Notes & Examples

Check List 11. ELEVATORS AND AREAS OF EVACUATION ASSISTANCE

11.12	Provide and indicate raised character, with California Braille below, floor designations to be 60” o.c. AFF on both jambs of each elevator. 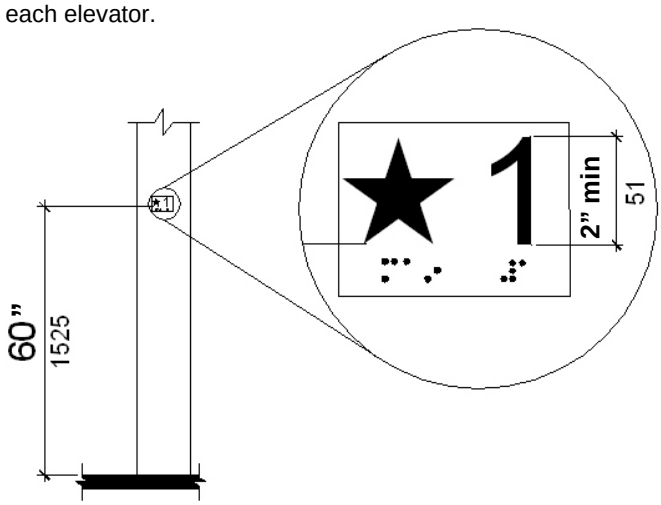	CBC 1116B.1.15 & CBC Fig. 11B-40C	Doorjamb marking Hoistway and elevator entrances
11.13	Indicate clearance between the car platform sill and the edge of the hoistway landing to be no greater than 1-1/4".	CBC 1116B.1.2 ADA Stds 4.10.9	Operation and leveling
11.14	Indicate clear door opening width to be 36” min.	CBC 1116B.1.4	Door size
11.15	Indicate height of door re-opening sensors at nominal 5” and 29” AFF.	CBC 1116B.1.5	Door protective and reopening device
11.16	Indicate interior dimensions for elevator cab with 36” wide side-slide opening doors to be 68” min wide, and 54” min deep between the back wall and the elevator door, and 51” min deep between the back wall and the return panel. 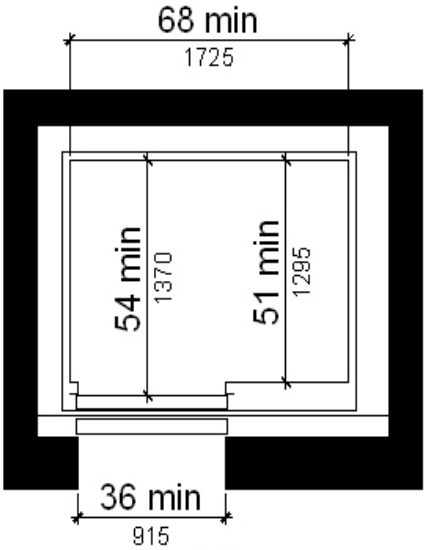	CBC 1116B.1.8, CBC Fig. 11B-40A(a)	Car inside Minimum dimensions of elevator Cars - Side opening doors
11.17	Indicate interior dimensions for elevator cab with 36” wide center-opening doors to be 80” min wide, and 54” min deep	CBC 1116B.1.8 & CBC Fig. 11B-40A(b)	Car inside Minimum dimensions of elevator cars - Center opening doors

© 2006 DSA/OUD

	Justification / Reference or Code Citation	Headings / Comments / Notes & Examples

Check List 11. ELEVATORS AND AREAS OF EVACUATION ASSISTANCE

between the back wall and the elevator door, and 51” min deep between the back wall and the return panel.

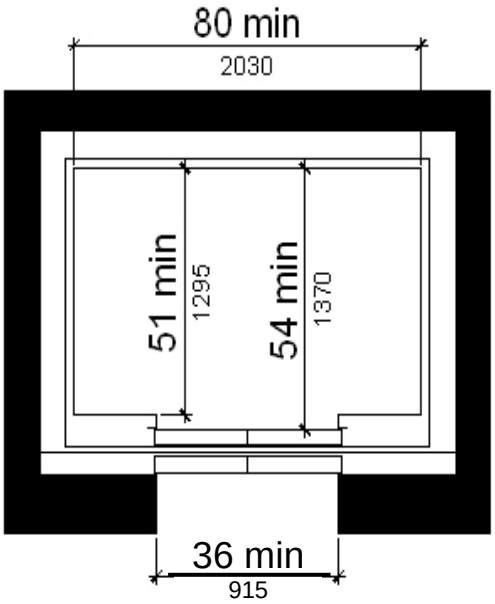

NOTE:
DSA may approve other configurations and dimensions if it is clearly shown that the floor area of the elevator car provides space for wheelchair users to enter the car, turn around, maneuver within reach of controls, and exit from the car.

11.18	Provide and indicate at least one (1) handrail at 32" AFF and 1-1/2" from the wall.	CBC 1116B.1.11	Handrails
11.19	The highest operable part of a two-way emergency intercom system must be 48” max AFF. The device must be identified by tactile characters located adjacent to the device. If the system uses a handset, the cord from the panel to the handset must be 29” min long. The car emergency signaling device cannot be limited to voice communication. If instructions for use are provided, essential information must be presented in both tactile and visual form.	CBC 1116B.1.8 ADA Stds 4.10.14	Car inside
11.20	Indicate centerlines of highest and lowest elevator floor buttons (inside car) to be within 35” and 48” AFF for front approach and 35” and 54” AFF for side approach.	CBC 1116B.1.8	Car inside

© 2006 DSA/OUD

Project designer (PD) shall address the following marked or circled items, and any additional plan review comments on drawings and specifications before scheduling a back check appointment for access compliance (AC). Any questions or points of disagreement must be resolved prior to back check by fax to plan reviewer (PR).	Justification / Reference or Code Citation	Headings / Comments / Notes & Examples

Check List 11. ELEVATORS AND AREAS OF EVACUATION ASSISTANCE

11.21 Emergency controls, including the emergency stop and alarm, must be grouped in or adjacent to the bottom of the panel and must be 35” min AFF.	CBC 1116B.1.8 & CBC Fig. 11B-40B(a)	Car inside Elevator control panel - Elevator control panel detail

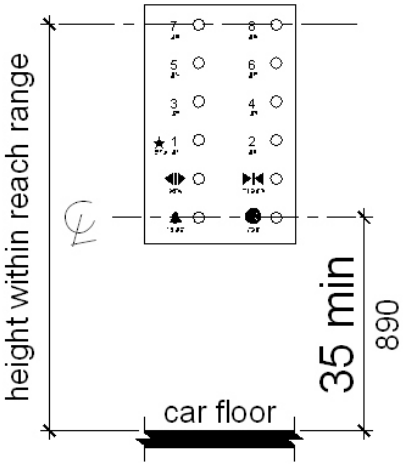

11.22 Indicate on an enlarged detail elevator car control buttons to be designated by: **1.** Car control buttons shall have a minimum dimension of 3/4” and shall be illuminated. **2.** Car control buttons shall be raised 1/8” +/- 1/32” above the surrounding surface and shall have square shoulders. **3.** Floors shall be designated by numbers, a min of 5/8” high and white on a black background, with standard alphabet characters or standard symbols immediately to the left of control buttons. **4.** A California Grade 2 Braille symbol, located immediately below the numeral, character or symbol. **5.** A minimum clear space of 3/8” or other suitable means of separation shall be provided between rows of control buttons.	CBC 1116B.1.9	Car controls
AREAS OF EVACUATION ASSISTANCE	CBC 1114B.2	Egress and areas for evacuation assistance
11.23 Provide area of evacuation assistance in building or portions of building required to be accessible, when an exit required by Chapter 10 is not accessible. EXCEPTIONS: (does not provide relief from the requirement to provide accessible exits or enclosures) a. In buildings or facilities having a supervised automatic sprinkler system. b. In alterations of existing buildings.	CBC 1114B.2.1	General

© 2006 DSA/OUD

	Project designer (PD) shall address the following marked or circled items, and any additional plan review comments on drawings and specifications before scheduling a back check appointment for access compliance (AC). Any questions or points of disagreement must be resolved prior to back check by fax to plan reviewer (PR).	Justification / Reference or Code Citation	Headings / Comments / Notes & Examples
	Check List 11. ELEVATORS AND AREAS OF EVACUATION ASSISTANCE		
11.24	If applicable, indicate on cover sheet or in code analysis that sprinkler system is supervised.	CBSC Part 1 4-317(b)	Plans
11.25	Area of evacuation assistance must adjoin an accessible path of travel.	CBC 1114B.1.2	Accessible route of travel
11.26	Provide, and indicate on plan, at least two 30” x 48” minimum spaces at each area of evacuation assistance.	CBC 1114B.2.2.2	Areas for evacuation assistance - Size
11.27	30” x 48” spaces cannot encroach on any required exit width, including door swings and required stair landing dimensions.	CBC 1114B.2.2.2	Areas for evacuation assistance - Size
11.28	Provide at least one 30” x 48” space on each story for every 200 persons of calculated occupant load served by the area for evacuation assistance, but never less than two at each area of evacuation assistance. EXCEPTION: The building official may reduce the minimum number of 30” x 48” spaces to one for each area for evacuation assistance on floors where the occupant load is less than 200.	CBC 1114B.2.2.2	Areas for evacuation assistance - Size
11.29	If applicable, indicate on cover sheet, plan, or in code analysis occupancy load for each story.	CBSC Part 1 4-317(b)	Plans
11.30	Stairs adjacent to, or serving areas of evacuation assistance, must provide 48” minimum clear width between handrails or any other protrusion.	CBC 1114B.2.2.3	Adjacent stairway width
11.31	Provide a two-way emergency communication system with both visible and audible communication for use by the fire department or rescue crews at or near a primary entrance to the facility. A button shall activate both a light at the primary entrance and a light in the area of evacuation assistance indicating that the request has been received. (The fire department may approve a location other than the primary entry.)	CBC 1114B.2.2.4	Two-way communication
11.32	Indicate the location of operable parts on the two-way emergency communication system parts.	CBC 1114B.2.2.4.2	Two-way communication
11.33	Provide a sign which states: “AREA FOR EVACUATION ASSISTANCE” (including Braille and raised letters) with the International Symbol of Accessibility adjacent to the door leading to the area. Provide an additional illuminated sign when exit sign illumination is required.	CBC 1114B.2.2.5 & ADA Stds 4.3.11.5	Identification Identification
	Provide a sign with instructions in each area of evacuation assistance, including directions for use of emergency communications system.	CBC 1114B.2.2.5 & ADA Stds 4.3.11.5	Identification Identification
11.34	See CBC 1114B.2.3 for area for evacuation assistance alternatives in high rise buildings.	CBC 1114B.2.3	Area for evacuation assistance, high rise alternative
11.35	Indicate construction and location of area of evacuation assistance to comply with one of the following:		

© 2006 DSA/OUD

11	Project designer (PD) shall address the following marked or circled items, and any additional plan review comments on drawings and specifications before scheduling a back check appointment for access compliance (AC). Any questions or points of disagreement must be resolved prior to back check by fax to plan reviewer (PR).	Justification / Reference or Code Citation	Headings / Comments / Notes & Examples
Check List 11.	**ELEVATORS AND AREAS OF EVACUATION ASSISTANCE**		
1.	A portion of a stairway landing within a smoke proof enclosure complying with local requirements.	CBC 1114B.2.2.1 #1	Location and construction
2.	A portion of an exterior exit balcony located immediately adjacent to an exit stairway complying with local requirements for exterior exit balconies. Openings to the exterior of the building located within 20' of the area of evacuation assistance shall be protected with 3/4-hour fire protection assemblies.	CBC 1114B.2.2.1 #2	Location and construction
3.	A portion of a one-hour fire resistive corridor or vestibule (complying with local requirements for fire resistive construction and opening protection) located immediately adjacent to an exit enclosure.	CBC 1114B.2.2.1 #3	Location and construction
4.	A portion of a stairway landing within an exit enclosure, which is vented to the exterior and is separated from the interior of the building, shall have no less than one-hour fire-resistive doors.	CBC 1114B.2.2.1 #5	Location and construction
5.	When approved by the building official, an area or a room may be separated from other portions of the buildings by a smoke barrier. To comply, a smoke barrier shall have a fire resistive rating of no less than one-hour and shall completely enclose the area or room. Doors in the smoke barrier shall be tight fitting smoke-and-draft. Control assemblies shall have a fire protection rating of no less than 20 minutes and shall be self-closing or automatic closing. The area or room shall be provided with an exit directly into an exit enclosure. When the room or area exits into an exit enclosure, which is required to be of more than one-hour fire-resistive construction, the room or area shall have the same fire resistive construction.	CBC 1114B.2.2.1 #6	Location and construction
6.	An elevator lobby with elevator shafts and adjacent lobbies pressurized as required for smoke-proof enclosures by local regulations. Such pressurized systems shall be activated by smoke detectors on each floor in a manner approved by the local authority. Pressurization equipment and its ductwork within the building shall be separated from other portions of the building by a minimum two-hour fire resistive construction.	CBC 1114B.2.2.1 #7 CBC 1114B.2.3	Location and construction Area for evacuation assistance, high-rise alternative

© 2006 DSA/OUD

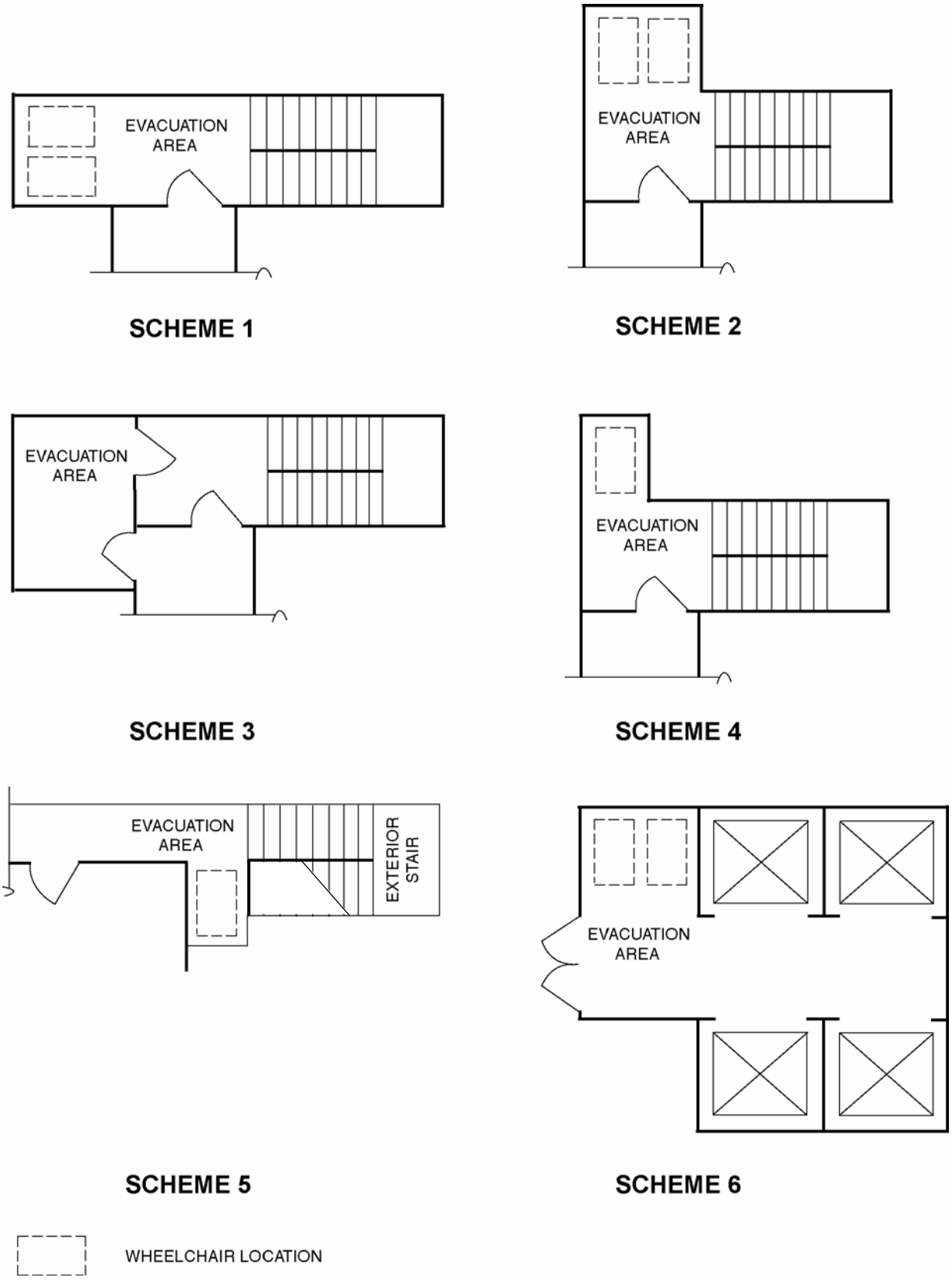

Fig 11-A. Evacuation Assistance Areas

12	Project designer (PD) shall address the following marked or circled items, and any additional plan review comments on drawings and specifications before scheduling a back check appointment for access compliance (AC). Any questions or points of disagreement must be resolved prior to back check by fax to plan reviewer (PR).	Justification / Reference or Code Citation	Headings / Comments / Notes & Examples

Check List 12. WHEELCHAIR LIFTS

THIS CHECKLIST IS CURRENTLY UNDER REVISION

© 2006 DSA/OUD

13	Project designer (PD) shall address the following marked or circled items, and any additional plan review comments on drawings and specifications before scheduling a back check appointment for access compliance (AC). Any questions or points of disagreement must be resolved prior to back check by fax to plan reviewer (PR).	Justification / Reference or Code Citation	Heading / Comments / Notes & Examples

Check List 13. PUBLIC TELEPHONES

13.1	For additional scoping requirements and exceptions see also applicable **DSA/AC Checklist 1.**		
13.2	Indicate number and location of all public pay telephones, public closed circuit telephones, or other public telephones on each site and floor plan.	CBSC Part 1 4-317(b) & CBC 204 – C	Plans <u>DEFINITION:</u> CLOSED CIRCUIT TELEPHONE: A telephone with dedicated line(s) such as a house phone, courtesy phone or phone that must be used to gain entrance to a facility.
13.3	Indicate compliance status of all telephones included in this project (i.e. those that are to be newly constructed or altered, or part of the required POT) and provide DSA application number.	CBSC Part 1 4-317(b)	Plans
13.4	Indicate POT to accessible telephones (dashed line) and show 30” x 48” minimum clear floor space.	CBC 1117B.2.2 & CBSC Part 1 4-317(b)	Clear ground floor space Plans
13.5	Provide and indicate interior and exterior accessible public pay telephones, public closed circuit telephones, or other public telephones in compliance with the following table: Number of each type of telephone provided on each floor, or within distinctive exterior area. — Minimum number of telephones required to comply with 1117B.2 (excluding TTY requirement). 1 or more single unit. — 1 or at least 50% of telephones. 1 bank. — 1 or at least 50% of telephones. 2 or more banks. — 1 or at least 50% of telephones per bank*. At least 1 per floor must provide front approach. *A bank is two or more adjacent telephones.	CBC 1117B.2.1 & ADA Stds 4.1.3(17)(a)	Telephones Public telephones <u>NOTE:</u> To be considered within the same distinctive area, no two telephones should be more than 200’ apart from each other or have a level difference of more than 30” in height and be visible from each other’s location (measured along the POT.)
13.6	Provide additional maneuvering space as required at alcoves (indicate dimensions).	CBC 1117B.2.4 CBC Fig. 11B-5A	Relationship of maneuvering clearances to wheelchair spaces Minimum clear floor space for wheelchairs
13.7	Provide enlarged side and front elevation, indicating height of operable parts, knee clearance, and location of required signage.	CBC Fig. 11B-4	Mounting heights and clearances for telephones
13.8	Provide cane detectable warning at telephone that protrudes into pedestrian circulation area.	CBC 1117B.2.7#4 & CBC 1133B.8.6.1	Protruding telephone enclosures Protruding objects - General
13.9	Provide and indicate provision of volume control at all accessible telephones (12 dBA min to 18 dBA max above normal). In addition, equip 25%, but never less than one, of all other public telephones with a volume control and disperse them among all types of public telephones, including closed circuit telephones, throughout the building or facility.	CBC 1117B.2.8, ADA Stds 4.1.3(17)(b) & ADA Stds 4.31.5	Telephone equipment for hearing impaired persons Public telephones Hearing aid compatible and volume control telephones

Project designer (PD) shall address the following marked or circled items, and any additional plan review comments on drawings and specifications before scheduling a back check appointment for access compliance (AC). Any questions or points of disagreement must be resolved prior to back check by fax to plan reviewer (PR).

Check List 13. PUBLIC TELEPHONES

		Justification / Reference or Code Citation	Heading / Comments / Notes & Examples
13.10	Provide and indicate at least one text telephone (TTY) where four or more public pay telephones are provided at the exterior and interior of a site and if at least one is in an interior location. The TTY must be located on the inside in a public use area.	CBC 1117B.2.9.1 & ADA Stds 4.1.3(17)(c)(i)	Text telephones – Where required Public telephones
13.11	Provide and indicate a text telephone (TTY) where at least one interior public pay telephone is located in a facility that is a stadium or arena, a convention center, a hotel with a convention center, or a covered mall.	CBC 1117B.2.9.1	Text telephones – Where required
13.12	Provide and indicate a text telephone (TTY) where at least one public pay telephone is located in or adjacent to a hospital emergency room, hospital recovery room, or hospital waiting room. One TTY shall be provided at each such location.	CBC 1117B.2.9.1	Text telephones – Where required
13.13	Provide and indicate a text telephone in facilities used by entities that provide emergency services, including 911 services.	28 CFR §35.162	Telephone emergency services
13.14	Provide and indicate shelf and electrical outlet for portable TTY.	CBC 1117B.2.9.2 #2	Text telephones - General
13.15	Provide and indicate the following signage at accessible telephones: **1.** ISA at all wheelchair accessible telephones. **2.** Depiction of telephone handset with radiating sound waves at all telephones with volume controls. **3.** International TTY symbol at all text telephones. **4.** Directional signage adjacent to all banks of telephones which do not contain a text telephone indicating the location of the nearest text telephone (TTY). Include the international TTY symbol. If a facility has no banks of telephones, the directional signage shall be provided at the entrance (e.g., in a building directory).	CBC 1117B.2.8 CBC 1117B.2.9.3	Telephone equipment for the hearing impaired Text telephones - Signage

1

2

3 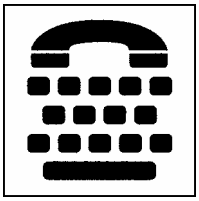

4 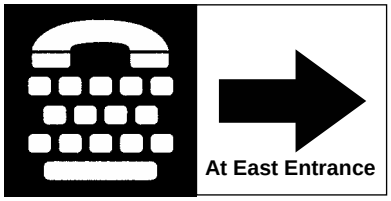

5. Indicate location of signs to be high enough to be seen even when the telephone is in use. Size signs so that they can be seen from a distance.

© 2006 DSA/OUD

13	Project designer (PD) shall address the following marked or circled items, and any additional plan review comments on drawings and specifications before scheduling a back check appointment for access compliance (AC). Any questions or points of disagreement must be resolved prior to back check by fax to plan reviewer (PR).	Justification / Reference or Code Citation	Heading / Comments / Notes & Examples
	Check List 13. PUBLIC TELEPHONES		
13.16	Telephone book, if provided, must be located at a position within reach range.	CBC 1117B.2.12 & ADA Stds 4.31.7	Telephone books Telephone books
13.17	In large projects with many telephone units or banks, provide ratio table, indicating total units, accessible units, volume control units, and TTY units for each floor/area.	CBSC Part 1 4-317(b)	Plans
13.18	Telephones shall have push button controls where service for such equipment is available.	CBC 1117B.2.10 & ADA Stds 4.31.6	Telephones - Controls Telephones - Controls
13.19	The cord from the telephone to the handset shall be at least 29 inches long.	CBC 1117B.2.11 & ADA Stds 4.31.8	Telephones - Cord length Telephones - Cord length

© 2006 DSA/OUD

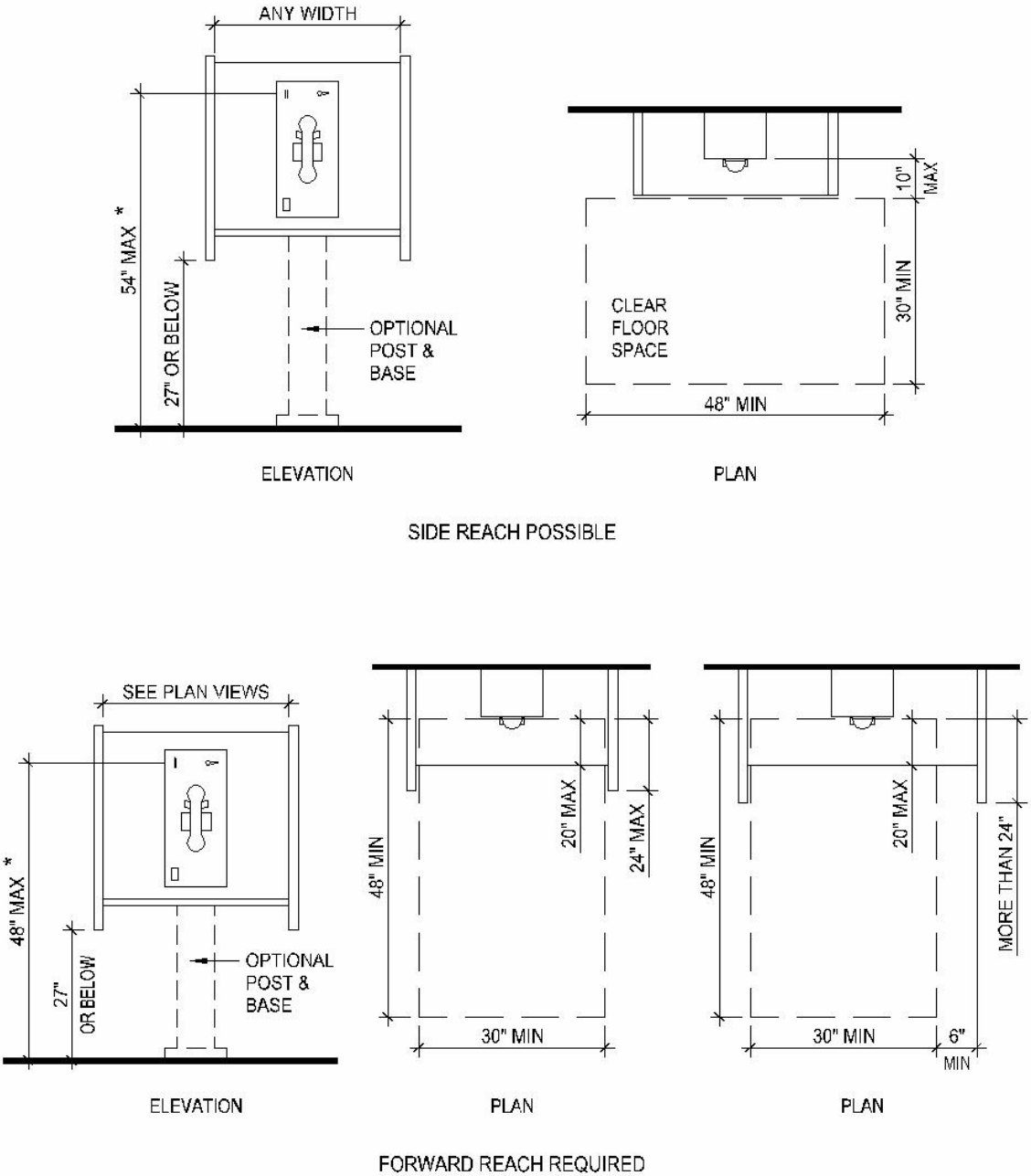

* HEIGHT TO HIGHEST OPERABLE PARTS WHICH ARE ESSENTIAL TO BASIC OPERATION OF TELEPHONE.

Fig 13-A Telephone Approaches and Reach Ranges

14	Project designer (PD) shall address the following marked or circled items, and any additional plan review comments on drawings and specifications before scheduling a back check appointment for access compliance (AC). Any questions or points of disagreement must be resolved prior to back check by fax to plan reviewer (PR).	Justification / Reference or Code Citation	Headings / Comments / Notes & Examples
	Check List 14. DRINKING FOUNTAINS		
14.1	For additional scoping requirements and exceptions see also applicable **DSA/AC Checklist 1.**		
14.2	Indicate location and user type of all interior and exterior drinking fountains (DFs) on each site and floor plan.	CBSC Part 1 4-317(b)	Plans
14.3	Indicate compliance status of all DFs included in this project (i.e. those that are to be newly constructed or altered, or part of the required accessible route of travel) and provide DSA application number.	CBSC Part 1 4-317(b)	Plans
14.4	Indicate the accessible route of travel (dashed line) to accessible DFs and show a 30" x 48" clear space.	ADA Stds. 4.1.3(10)(b) CBSC Part 1 4-317(b)	Drinking fountains Plans
14.5	Provide and indicate "hi-low" combination DF in new construction where only one drinking fountain area is provided per floor.	CBC 1117B.1.1	Water fountains (drinking) - General
14.6	Provide and indicate "hi-low" combination DF in alteration projects if DF <u>is part of the alteration</u> and where only one drinking fountain area is provided per floor.	CBC 1134B.2 ADA Stds. 4.1.6(2)	Accessibility for existing buildings Accessible buildings: Alterations
14.7	Provide and indicate "hi-low" combination DF in alteration projects if DF <u>serves the area of alteration</u> and where only one drinking fountain area is provided per floor.	CBC 1134B.2.1 & ADA Stds. 4.1.6(2)	Accessibility for existing buildings Accessible buildings: Alterations
14.8	Where more than one DF is provided on a floor, indicate that 50% of those provided are to be accessible and located on an accessible route of travel.	ADA Stds. 4.1.3(10)(b)	Drinking fountains
14.9	When DFs are provided, indicate "hi-low" combination, or one wheelchair accessible DF and one DF at standard height within immediate proximity.	CBC 1117B.1.1, & ADA Stds. 4.1.3(10)(a)	Water fountains (drinking) - General Drinking fountains
14.10	All DFs must be located in alcoves or otherwise positioned so as not to encrach into pedestrian ways.	CBC 1117B.1.2	Alcoves
	EXCEPTION: At an existing building or facility, when DSA determines unreasonable hardship to locate the DF in an alcove, the DF may project into the circulation path, if the DF is made identifiable to blind persons as follows:		NOTE: When truncated domes are planned, the PD must include a written request for finding of unreasonable hardship at the time of plan submittal.
	a. Provide a textured area, clearly identifiable by a blind person using a cane, on the floor surface under the DF and extend the warning surface from the back wall to 12" beyond the front edge of the DF and 12" beyond each side of the DF, or		
	b. Provide wing walls or cane-detectable railings on each side of the DF. The wings must project out from the supporting wall at least as far as the DF to within 6" of the surface of the circulation path, but cannot reduce the required clear width of the adjacent accessible route.	CBC Fig. 11B-3(b)	Water fountains

14	Project designer (PD) shall address the following marked or circled items, and any additional plan review comments on drawings and specifications before scheduling a back check appointment for access compliance (AC). Any questions or points of disagreement must be resolved prior to back check by fax to plan reviewer (PR).	Justification / Reference or Code Citation	Headings / Comments / Notes & Examples
	Check List 14. DRINKING FOUNTAINS		
14.11	Provide alcove dimensions:		
	1. 32” min wide and 18” min deep.	CBC 1117B.1.2	Alcoves
	2. 36” min wide, if alcove is deeper than 24”.	CBC 1118B.4 #2	Relationship of maneuvering clearances to wheelchair spaces
14.12	Provide and indicate the following dimensions for wheelchair accessible DF on enlarged elevations and plan. Refer to checklist figure 14-B.		
	1. DF must be 18” - 19" deep and allow front approach.		
	2. Knee clearance must be 27” min AFF for a depth of 8” min, measured from the front edge of the DF.		
	3. Toe clearance must be 9” min AFF and 17” min deep, measured from the front of the DF.		
	4. DF activator must provide accessible operation and be within 6” of the front edge of the DF.		
	5. The bubbler outlet must be at 36” max AFF.		
	6. On DFs with round or oval bowls, the bubbler outlet must be located so that the flow of water is within 3” of the front edge of the DF.	ADA Stds. 4.15.3	Spout location
	7. On DFs with square bowls, the bubbler outlet must be within 6” of the front edge of the DF and provide a flow of water that is parallel with the front edge.	CBC 1115B.2.1.5.3	Accessible drinking fountains
14.13	DFs in facilities primarily used by children should be adjusted to meet their accessibility needs in accordance with the following suggested dimensions:	CBC 1115B.3 & CBC Table 1115B-1	Where used by children Suggested dimensions for children’s use
	1. Knee clearance height must be 24” max AFF for elementary schools and 22” max AFF for kindergarten.		
	2. The bubbler outlet height must be 32” max AFF for elementary schools and 30” max AFF for kindergarten.		
14.14	DF details on architectural plans must correspond with site plan, plumbing plans, and/or specs.	CBSC Part 1 4-317(b)	Plans
14.15	Provide dimensioned detail representing the actual fixture, for all accessible DFs under this contract.	CBSC Part 1 4-317(b)	Plans
14.16	Bring manufacturer’s DF cut sheets to back check.	CBSC Part 1 4-317(b)	Plans
14.17	Indicate that the spout must provide a flow of water at least 4” high.	CBC 1115B.2.1.5.4	Accessible drinking fountains
14.18	Indicate that the force required to activate controls can not exceed 5 lbf.	CBC 1115B.2.1.5.4	Accessible drinking fountains

© 2006 DSA/OUD

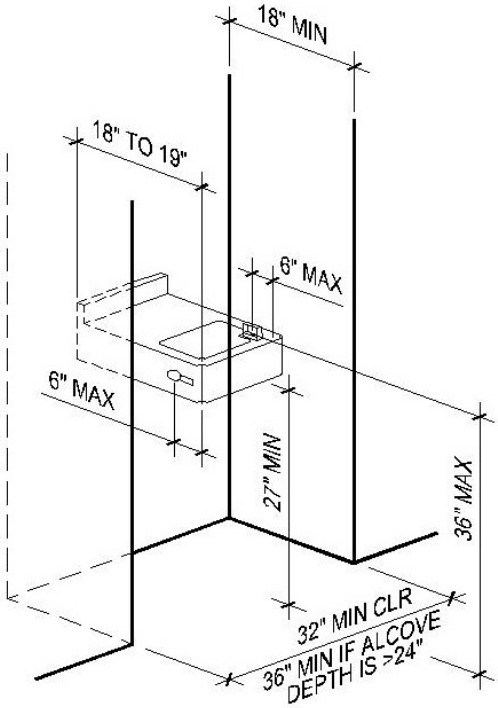

(a) ALCOVE INSTALLATION

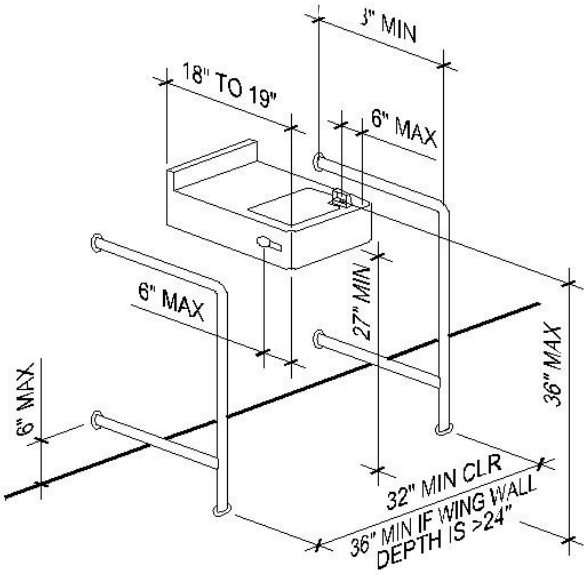

(b) NONALCOVE WING WALL INSTALLATION

Fig 14-A. Single Accessible Drinking Fountain

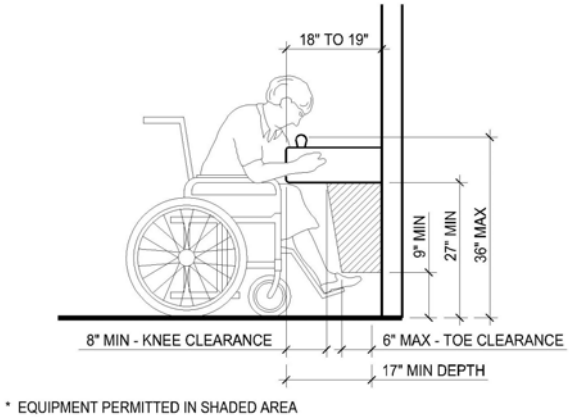

Fig 14-B. Spout Height and Knee Clearance at Drinking Fountains

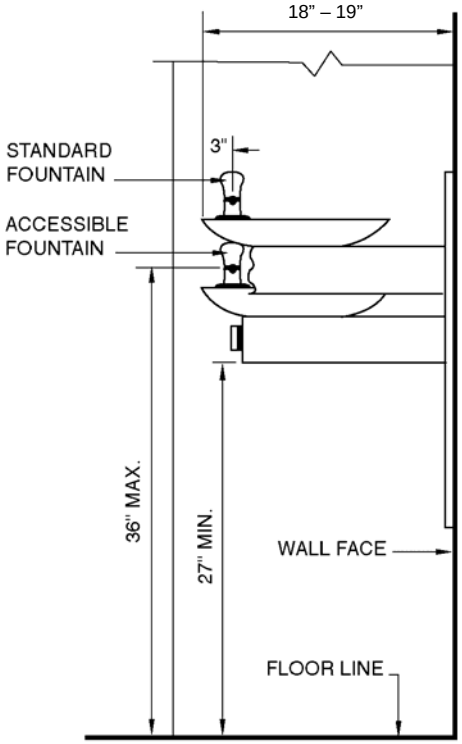

Fig 14-C. Side Elevation "Hi-Low"

© 2006 DSA/OUD

15	Project designer (PD) shall address the following marked or circled items, and any additional plan review comments on drawings and specifications before scheduling a back check appointment for access compliance (AC). Any questions or points of disagreement must be resolved prior to back check by fax to plan reviewer (PR).	Justification / Reference or Code Citation	Headings / Comments / Notes & Examples
	Check List 15. SANITARY FACILITIES		
15.1	For additional scoping requirements and exceptions see also applicable **DSA/AC Checklist 1.**		
15.2	Indicate location and DSA application number of all toilet and bathing facilities on site plan.	CBSC Part 1 4-317(b)	Plans
15.3	All toilet and bathing facilities under this contract must be made accessible (i.e. those that are to be newly constructed or altered, or part of the required path of travel).	CBC 1115B.1	Bathing and toilet facilities
	EXCEPTION:		
	In alterations where accessibility is required to and in sanitary facilities serving the area of alteration, when DSA determines that compliance would create an unreasonable hardship, and when equivalent facilitation is provided. When equivalent facilitation is used, accessible sanitary facilities must be provided within a reasonable distance of inaccessible sanitary facilities.		NOTE: DSA does generally not determine hardship if the equivalent facilitation toilet facility provides only front transfer.
15.4	Provide fully accessible restroom facilities for each type of use provided and within close proximity of the inaccessible separate facilities serving the area of alteration.	CBC 1114B.1.2, CBC 1115B.1 & CBC 1115B.2	Accessible route of travel Bathing and toilet facilities Toilet facilities
	EXCEPTION:		
	In alterations when DSA determines that full code compliance is technically infeasible or that compliance would create an unreasonable hardship DSA may accept unisex fully accessible toilets as equivalent to a pair of partially accessible arrangements for each sex.	DSA Policy 97-01	Unisex restrooms NOTE: Labor code §2350 requires separate facilities within a reasonable distance when there are five or more employees.
15.5	Provide at least one unisex fully accessible facility within close proximity to inaccessible unisex facilities.	CBC 1115B.2	Toilet facilities
15.6	Common-use accessible restroom needs to be accessible directly from a corridor or from the exterior (not through an office, a classroom, or any assembly or performance area which disturbs the function of that room).	CBC 1114B.1.2 & ADA Stds 4.22	Accessible route of travel Toilet rooms
15.7	Door leading to sanitary facility must be accessible. Indicate door width, door maneuvering clearances and slope, and show 90˚ door swing on plan.	CBC 1115B.4, ADA Stds 4.1.3(7)(c) & ADA Stds 4.22.2	Passageways Doors Toilet rooms - Doors
15.8	At sanitary facility, door cannot swing into the clear floor space required for any fixture (i.e. front and side transfer spaces at accessible WC, spaces at accessible urinal and all lavatories, and transfer spaces at accessible showers and bathtubs).	ADA Stds 4.22.2 & ADA Stds 4.23.2	Toilet rooms - Doors Bathrooms, bathing facilities, and shower rooms - Doors
15.9	Indicate 30” x 48” clear floor space on plan at accessible urinal, shower/bathtub, and at least one accessible lavatory.	CBSC Part 1 4-317(b)	Plans
15.10	Indicate wheelchair turning space on plan:	CBSC Part 1 4-317(b),	Plans
	1. 60” diameter circle or a T-shaped space for 180 turns in single accommodation toilet room.	CBC 1115B.7.2	Single accommodation toilet facilities

© 2006 DSA/OUD

	Project designer (PD) shall address the following marked or circled items, and any additional plan review comments on drawings and specifications before scheduling a back check appointment for access compliance (AC). Any questions or points of disagreement must be resolved prior to back check by fax to plan reviewer (PR).	Justification / Reference or Code Citation	Headings / Comments / Notes & Examples
	Check List 15. SANITARY FACILITIES		
	2. 60” diameter circle in multiple accommodation toilet room.	CBC 1115B.7.1 #1 ADA Stds 4.23.3	Multiple-accommodation toilet facilities – Wheelchair clearances Clear floor space
	3. 60” diameter circle or a T-shaped space for 180 turns in bathroom.	ADA Stds 4.23.3	Clear floor space
15.11	Doors, other than the door to the accessible compartment, cannot swing into the wheelchair turning space by more than 12”.	CBC 1115B.7.1 #1	Multiple-accommodation toilet facilities - Wheelchair clearance
15.12	In alterations, provide as-built dimensions pertinent to compliance status of this restroom.	CBSC Part 1 4-317(b)	Plans
15.13	For restroom signage see **Checklist 17**.		
15.14	Coordinate plumbing drawings with architectural drawings.	CBSC Part 1 4-317(b)	Plans
15.15	Coordinate all fixtures shown on fixture schedule with all plumbing fixtures shown on plumbing and architectural drawings.	CBSC Part 1 4-317(b)	Plans
	WATER CLOSETS (WCs) AND COMPARTMENTS	CBC 1115B.7	Toilet facilities
15.16	Compartment door to accessible fixture must comply with door maneuvering requirements. Indicate strike edge clearance and landing depth (e.g., for front pull-side approach show 18” and 60” dimensions). See Checklist 8 for door requirements.	ADA Stds 4.17.5 & ADA Stds Figs. 25, 30(a), 30(a-1) & 30(b)	Toilet stall doors Maneuvering clearances at doors Toilet stalls
15.17	Provide and indicate the following for compartment door to accessible fixture:	CBC 1115B.7.1#4	Compartment doors
	1. Side entry stall door must have 34” clear opening.	CBC Fig. 11B-1B	Multiple accommodation toilet
	2. Front entry stall door must have 32” clear opening.	CBC Fig. 11B-1A	
	3. Stall door must be self-closing, and have U-pulls on both sides. If provided, the locking mechanism must be accessible, not requiring grasping, pinching, or turning of the wrist.	CBC 1115B.7.1 #4	Compartment doors

© 2006 DSA/OUD

Project designer (PD) shall address the following marked or circled items, and any additional plan review comments on drawings and specifications before scheduling a back check appointment for access compliance (AC). Any questions or points of disagreement must be resolved prior to back check by fax to plan reviewer (PR).	Justification / Reference or Code Citation	Headings / Comments / Notes & Examples

Check List 15. SANITARY FACILITIES

15.18	Front entry stall door must be located in front of the WC side transfer space – not in front of the WC – with a maximum stile width of 4 inches. 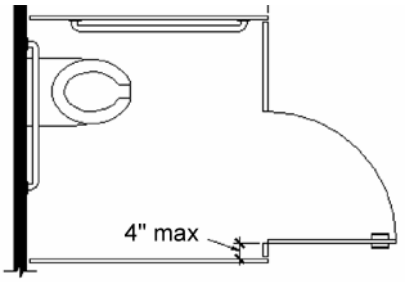 	CBC Fig. 11B-1A & ADA Stds Fig. 30(a)	Toilet stalls - Standard stall
15.19	In multiple-accommodation toilet rooms, provide and indicate a 44” min clear passageway to the accessible WC compartment, excluding door opening and door swings.	CBC 1115 B.7.1 #4	Compartment doors
15.20	In accessible compartments with out-swinging side entry stall doors, provide and indicate a 60” square space in front of the WC. 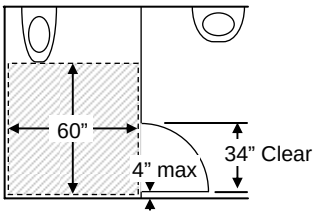 Out-swinging door and 60” square directly in front of water closet. *(All dims are min. u.o.n.)*	CBC 1115B.7.1 #3 & CBSC Part 1 4-317(b)	Accessible water closet compartment Plans
15.21	In accessible compartments with in-swinging side entry stall doors, provide and indicate 92” min total stall length for wall-mounted WC, or 95” min for floor-mounted WC. 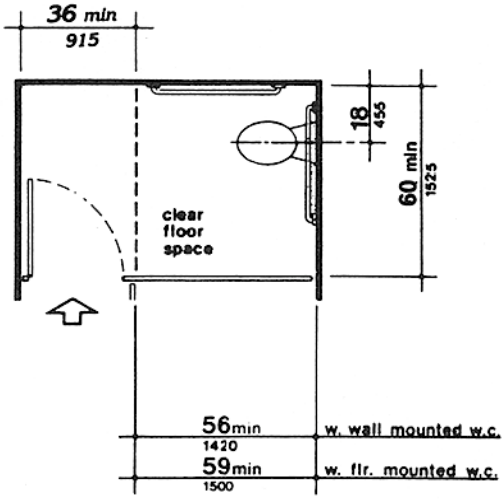 	ADA Stds. Fig. 30(a-1)	Toilet stalls – Standard stall (end of row)

	Project designer (PD) shall address the following marked or circled items, and any additional plan review comments on drawings and specifications before scheduling a back check appointment for access compliance (AC). Any questions or points of disagreement must be resolved prior to back check by fax to plan reviewer (PR).	Justification / Reference or Code Citation	Headings / Comments / Notes & Examples
	Check List 15. SANITARY FACILITIES		
15.22	In accessible compartments with out-swinging front entry stall doors, provide and indicate 48” min long clear space in front of the WC.	CBC 1115B.7.1 #3	Accessible water closet compartment
15.23	Indicate height of top of WC seat. Provide exact dimension, not a range, and coordinate with specifications and product cut sheet.	CBC 1115B.2.1 #1	Accessible water closets
15.24	Indicate WC flush valve to be on wide side of toilet area.	CBC 1115B.2.1 #2	Accessible water closets
15.25	In new construction and alterations, indicate 18” from centerline of WC to nearest sidewall.	CBC 1115B.7.1 #3 & CBC 1115B.7.2	Accessible water closet compartment Single-accommodation toilet facilities
15.26	Indicate a 28” min wide clear dimension between the accessible WC (or tank) and any other fixture or a 32” min wide clear dimension to sidewall or partition that is located on the wide side. 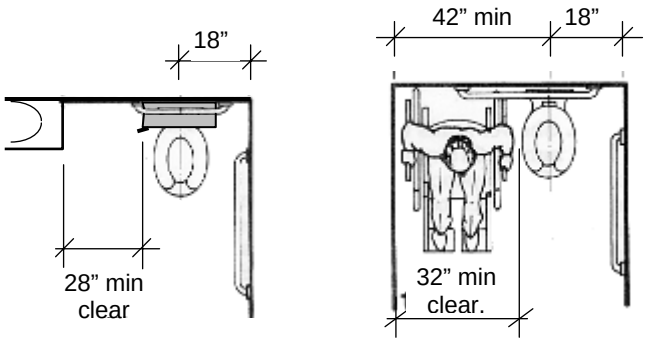 	CBC 1115B.7.1 #3 & CBC 1115B.7.2	Accessible water closet compartment Single-accommodation toilet facilities
15.27	Indicate 42” min from centerline of WC to wall on wide side, or indicate total width of clear area to be 60” min (18” + 42”) to allow side and front transfer use.	ADA Stds Fig 28(c)	Clear floor space at water closets
15.28	Provide one semi-ambulant stall where six or more WCs are provided within a multiple-accommodation toilet room.	CBC 1115B.7.1 #5	Large toilet rooms
15.29	Provide and indicate the following at semi-ambulant stall: **1.** Stall must be 36” wide absolute. **2.** Stall length must provide 24” in front of the WC, and allow installation of grab bars on each side. **3.** Stall door with 32” clear opening. **4.** Stall door must be out-swinging, self-closing, have U-pulls on both sides and a locking mechanism that does not require grasping, pinching or turning of the wrist. **5.** Parallel grab bars on both sides of the WC, at least 42” long, with the front end positioned 24” from the WC.	CBC 1115B.7.1#5	Large toilet rooms
	6. Accessible WC fixture and accessible toilet accessories.	ADA Stds 4.22.4	Water Closets
	GRAB BARS IN TOILET FACILITIES	CBC 1115B.8	Grab bars
15.30	Indicate height of grab bar to be 33” AFF.	CBC 1115B.8.1	Location

© 2006 DSA/OUD

	Project designer (PD) shall address the following marked or circled items, and any additional plan review comments on drawings and specifications before scheduling a back check appointment for access compliance (AC). Any questions or points of disagreement must be resolved prior to back check by fax to plan reviewer (PR).	Justification / Reference or Code Citation	Headings / Comments / Notes & Examples
	Check List 15. SANITARY FACILITIES		
	EXCEPTION: Where a tank–type toilet is used which obstructs placement at 33”, the back grab bar may be 36” max.		
15.31	At an accessible WC, indicate a 36” long back grab bar to extend 12” beyond the center of the WC toward the side wall, and 24” toward the open side.	ADA Stds. Fig. 29(a)	Grab bars at water closets – Back Wall
15.32	At an accessible WC, indicate 42” min long side grab bar to extend 54” min beyond the back wall.	ADA Stds 4.16.4 & ADA Stds Fig. 29(b)	Water closets - Grab bars Grab bars at water closets - Side wall
15.33	Indicate diameter of grab bars and coordinate with specs.	CBC 1115B.8.2	Diameter or width
15.34	Indicate space between grab bar and adjacent wall to be exactly 1-1/2".	CBC 1115B.8.2	Diameter or width
ACCESSORIES		CBC 1115B.9	
15.35	Indicate location and provide necessary dimensions for all toilet/bathroom dispensers/disposals/accessories (e.g., soap, paper towel, seat cover, feminine tissue, electric dryer, coat hooks, etc) on enlarged plans and elevations. Elements must be within reach range of user but cannot protrude into any required clear floor space.	CBC 1115B.9	Toilet room fixtures and accessories
15.36	Indicate toilet paper dispenser (TPD) centerlines to be 12” max from the front edge of the WC and 19” min AFF. TPDs that control delivery, or that do not permit continuous paper flow, shall not be used. 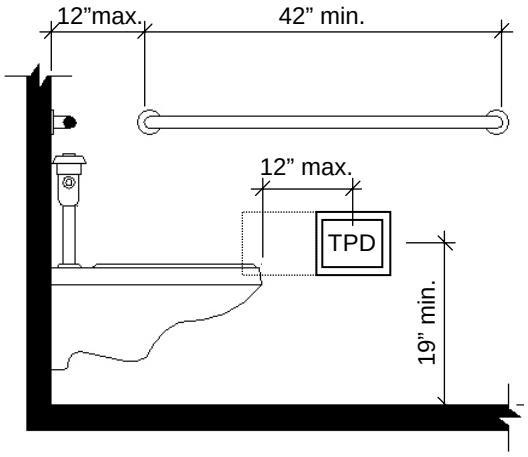 	CBC 1115B.9.3, CBC Fig. 11B-1A & ADA Stds 4.16.6	Toilet tissue dispensers Side elevation Water closets - Dispensers
15.37	Indicate projection of dispensers and disposals (e.g. toilet paper dispenser, feminine tissue disposal) in accessible and semi-ambulant compartment. Provide recess for installation and coordinate elevations, notes, and specs.	CBC 1115B.9.2	Towel, sanitary napkin, waste receptacles
15.38	If dispensers and disposals are N.I.C., indicate dimensions of recess or compliant projection.	CBSC Part 1 4-317(b)	Plans

© 2006 DSA/OUD

15	Project designer (PD) shall address the following marked or circled items, and any additional plan review comments on drawings and specifications before scheduling a back check appointment for access compliance (AC). Any questions or points of disagreement must be resolved prior to back check by fax to plan reviewer (PR).	Justification / Reference or Code Citation	Headings / Comments / Notes & Examples
	Check List 15. SANITARY FACILITIES		
15.39	Indicate height of operable parts, including coin slots of dispensers, disposal containers and other equipment (at least one of each type) to be 40” max AFF.	CBC 1115B.9.2	Towel, sanitary napkins, waste receptacles
15.40	Indicate bottom of all mirrors at lavatories to be 40” max AFF (i.e. to the bottom of the reflecting surface - not frame).	CBC 1115B.9.1#2 & ADA Stds 4.19.6	Lavatory fixtures Mirrors
15.41	Provide soap dispenser within reach range of clear 30” x 48” user space at accessible lavatory/sink.	CBC 1115B.9.1#1, CBC Fig. 11B-5C & CBC Fig. 11B-5D	Lavatory fixtures Forward reach Side reach
15.42	Indicate size and location of waste bin in all floor plans; especially if waste bin is not in contract (N.I.C.) This provides owner with dimensional requirements for purchase or installation. Provide recessed space in case waste bin would protrude into any required clear floor space (consider doors, fixtures, accessories, circulation path, etc.).	CBSC Part 1 4-317(b)	Plans
LAVATORIES (LAVs)		CBC 1115B.9.1	
15.43	All LAVs must be made accessible.	CBC 1115B.9.1	Lavatory fixtures
15.44	Provide and indicate 18” min from any adjacent side wall or partition to centerline of LAV	CBC 1115B.2.1.2.1	Accessible lavatories
.			
15.45	Provide enlarged side elevation indicating the following dimensions: **1.** Rim or counter edge no higher than 34” AFF.	CBC 1115B.2.1.2.1, CBC Fig. 11B-1D & ADA Stds 4.19.2	Accessible lavatories Knee clearance Height and clearances
	2. Apron to floor 29” min.		
	3. 27” min knee clearance (measured 8” min from front edge).		
	4. If a minimum 9” high toe clearance is provided, a maximum of 6” of the 48” clear floor space required at the fixture can extend into the toe space.	ADA Stds Fig. 31, & CBC Fig. 11B-1D	Lavatory clearances Knee clearance
	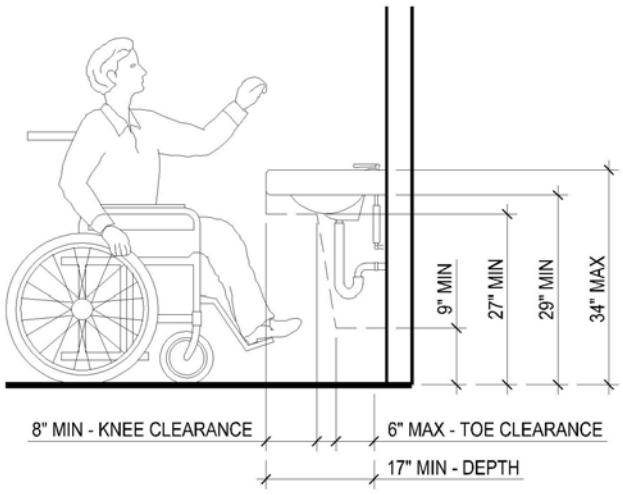 LAVATORY CLEARANCES		NOTE: DSA may consider some lavatories protruding objects if they are located in the direct path of travel, or if a blind person would not expect them at this location.

Project designer (PD) shall address the following marked or circled items, and any additional plan review comments on drawings and specifications before scheduling a back check appointment for access compliance (AC). Any questions or points of disagreement must be resolved prior to back check by fax to plan reviewer (PR).	Justification / Reference or Code Citation	Headings / Comments / Notes & Examples
Check List 15. SANITARY FACILITIES		
15.46 Lav elevation must reflect actual fixture chosen. Specify fixture that is shown in plans.		
15.47 Provide note on plan stating that all drainpipes and all hot water pipes accessible under lavatories must be insulated or otherwise covered.	CBC 1115B.2.1.2.2	Accessible lavatories
15.48 Provide the following note on plan: “There shall be no sharp or abrasive surfaces under lavatories”.	CBC 1115B.2.1.2.2	Accessible lavatories
15.49 Paper towel dispenser/electrical dryer cannot protrude into the required 30” x 48” clear floor space.	ADA Stds 4.4.1 & ADA Stds Fig. 8(e)	Protruding objects - General Protruding objects - Example of protection around wall mounted objects and measurements of clear widths
URINALS	CBC 1115B.2.1.1	
15.50 Where one or more urinals are provided, provide at least one wall hung accessible urinal and indicate the following:	CBC 1115B.2.1.1.1	Accessible urinals
1. Rim to be 17” max AFF.		
2. Rim to project 14” to 17” from back wall.	CBSC Part 1 4-317(b)	Plans
3. Flush control at 44” max AFF.	CBC 1115B.2.1.1.2	Accessible urinals
15.51 Indicate 30” min clearance between walls or partitions that project 24” or less from the front edge of the 30” x 48” clear space.	ADA Stds 4.18.3 & CBC Fig. 11B-5A(a)	Urinals - Clear floor space Minimum clear floor space for wheelchairs - Clear floor space in alcoves
15.52 Indicate 36” min clearance between walls or partitions that project more than 24” from the front edge of the 30” x 48” clear space (alcove situation).	ADA Stds 4.18.3 & CBC Fig. 11B-5A(b)	Urinals - Clear floor space Minimum clear floor space for wheelchairs – Additional maneuvering clearance for alcoves
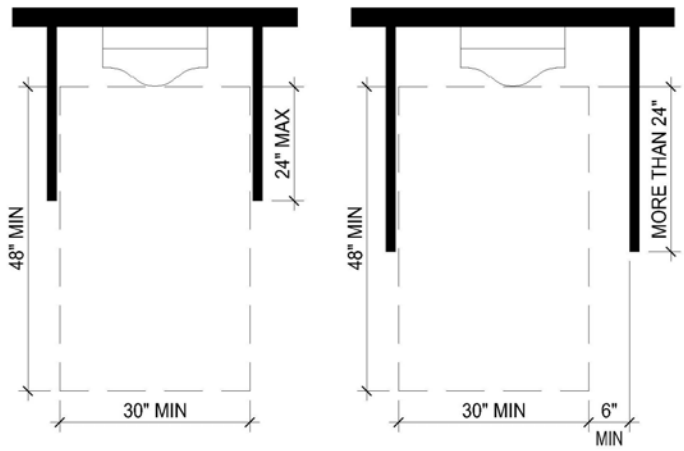		
SHOWERS	CBC 1115B.6.2	
15.53 Provide at least one accessible shower for each 100 (or fraction thereof) of total showers.	CBC 1115B.6 & ADA Stds 4.23.8	Showers Bathing and shower facilities

© 2006 DSA/OUD

	Project designer (PD) shall address the following marked or circled items, and any additional plan review comments on drawings and specifications before scheduling a back check appointment for access compliance (AC). Any questions or points of disagreement must be resolved prior to back check by fax to plan reviewer (PR).	Justification / Reference or Code Citation	Headings / Comments / Notes & Examples
	Check List 15. SANITARY FACILITIES		
15.54	Indicate size of shower stall to be either:	CBC 1115B.6.2.1 CBC Fig 11B-2A, ADA Stds 4.21.2	Showers - size Roll-in shower Shower stalls - Size and clearances
	1. 30” min x 60” min with a full width opening on the long side and a 36” min deep and 60” min long clear floor space in front of the opening.	ADA Stds Fig. 57(b)	Roll-in shower
	2. 36” x 60” min with a 36” min wide entrance opening and a 36” min deep and 60” min long clear floor space in front of the opening.		
15.55	In open shower facilities (gang showers), locate accessible shower in corner and provide folding seat and grab bars as shown in CBC Figure 11B-2C (the 36” long grab bar must be located so that seat can be folded up).	CBC 1115B.6.3	Open showers
15.56	Provide the following shower accessories and indicate location and dimensions:	CBC 1115B.6.2.4	Showers - Accessories
	1. Single-lever faucet control.		
	2. Hand-held sprayer with hose.		
	3. Folding seat.		
	4. Grab bars.		
	5. Soap dish.		
15.57	Indicate floor slope to be 2% max in any direction.	CBC 1115B.6.2.4.4	Floor slope
15.58	30” x 60” min shower stall must not have a curb or lip.	CBC 1115B.6.2.2 ADA Stds 4.21.7	Bathing facilities - Thresholds Shower stalls - Curbs
BATHTUBS		CBC 1115B.6.1	
15.59	Provide one accessible bathtub for each 100 (or fraction thereof) of total bathtubs.	CBC 1115B.6 & ADA Stds 4.23.8	Bathing facilities Bathing and shower facilities
15.60	Indicate size of clear floor space in front of bathtub (in relation to long dimension of tub):	CBC 1115B.6.1#1	Bathtubs – Floor space
	1. 48” x 60” for perpendicular approach at bathtub with seat in tub.	CBC Fig. 11B-8(a)	Clear floor space at bathtubs
	2. 30” x 60” for parallel approach at bathtub with seat in tub.	CBC Fig. 11B-8(b)	Clear floor space at bathtubs
	3. 30” x 75” for parallel approach at bathtub with seat at head of tub.	CBC Fig. 11B-8(c)	Clear floor space at bathtubs
15.61	Provide the following bathtub accessories and indicate location and dimensions:	CBC 1115B.6.1 & CBC Fig. 11B-9B	Bathtubs Grab bars at bathtubs
	1. Single-lever faucet control.	CBC 1115B.6.1 #4	Controls
	2. Hand-held sprayer with hose.	CBC 1115B.6.1#5	Shower unit
	3. Seat.	CBC 1115B.6.1#2 & CBC Fig. 11B-8	Seat Clear floor space at bathtubs
	4. Grab bars.	CBC 1115B.6.1#3 & CBC Fig. 11B-9B	Grab bars Grab bars at bathtubs

© 2006 DSA/OUD

	Project designer (PD) shall address the following marked or circled items, and any additional plan review comments on drawings and specifications before scheduling a back check appointment for access compliance (AC). Any questions or points of disagreement must be resolved prior to back check by fax to plan reviewer (PR).	Justification / Reference or Code Citation	Headings / Comments / Notes & Examples
	Check List 15. SANITARY FACILITIES		
LOCKER ROOMS IN BATHING FACILITIES		CBC 1115B.6.4	
15.62	1% of all lockers (but not less than 1) shall be made accessible.	CBC 1115B.6.4 ADA Stds 4.1.3(12)(a)	Lockers Storage, shelving and display units
15.63	The accessible route of travel to accesible lockers shall be no less than 36” in clear width.	CBC 1115B.6.4	Lockers
15.64	Provide elevation and indicate heights of locks (at 48” max) and shelves (between 15” and 48”).	CBC 1118B.5	Forward reach
15.65	Provide and indicate a bench or section of bench close to the accessible locker, measuring 24” deep, 48” wide, and 17” to 19” AFF, fixed to a wall along the longer dimension.	ADA Stds 4.35.4	Dressing, fitting, and locker rooms - Bench
15.66	Provide and indicate a 60” square min clear space in front of the accessible bench section, located in such a manner to allow a person using a wheelchair to make a parallel transfer onto the bench.	ADA Stds 4.35.2	Dressing, fitting, and locker rooms - Clear floor space
CHILDREN			
15.67	Design and construction of toilet and bathing facilities primarily used by children should be adjusted to meet their accessibility needs. See Figure 15-A at the end of this Checklist for an updated table of suggested dimensions.	CBC 1115B.3 & CBC Table 1115B-1	Where used by children Suggested dimensions for children’s use

© 2006 DSA/OUD

A = Adult dimensions (age 12 and over)
E = Elementary school dimensions
K = Kindergarten and pre–school dimensions
FED = ADAAG dimensions for children age 12 and younger, shown for reference only.

ALTERNATIVE DIMENSIONS IN INCHES		**A (Inches)**	**E (Inches)**	**K (Inches)**	**FED Children**
a	Toilet centering from wall	18	15	12	12-18
b	Toilet seat height/dimensions to top of seat	17-19	15	11-12**	11-17
c	Grab bar height (centerline)	33	27	20-22	18-27
d	Toilet paper above floor (centerline)	19 min	-	-	14-19
e	Toilet paper in front of toilet	12 max	6 max	6 max	-
f	Napkin disposal in front of toilet	12 max	12 max	N/A	-
g	Dispenser height	40 max	36 max	32 max	-
h	Mirror height (to bottom of glass)	40 max	34 max**	32 max	34 max
I	Lavatory/sink top height	34 max	29 max	24 max	31 max
j	Lavatory apron clearance	29 min	-	-	24 min*
k	Lavatory/sink knee clearance	27 min	24 min	19 min	24 min*
l	Urinal lip height	17 max	15 max	13 min	-
m	Urinal, toilet flush handle height	44 max	36 max**	32 max	36 max
n	Drinking fountain bubbler height	36 max	30 max**	30 max	30 max
o	Drinking fountain knee clearance	27 min	24 min	22 min	-
p	Ramp/stair handrail height	34-38	27***	22***	28 max***
q	Fixed or built-in seating, table top height	28-34	-	-	26-30*
r	Fixed or built-in seating and table knee clearance	27 min	-	-	24 min*
s	Forward reach range (high)	48 max	-	-	36-44 max
t	Side reach range (high)	54 max	-	-	36-44 max
u	Forward reach range (low)	15 min	-	-	20-16 min
v	Side reach range (low)	9 min	-	-	20-16 min

* No ADAAG requirement if element is used primarily by children ages 5 and younger and if clear floor and parallel approach is provided.
** Change from CBC due to more restrictive federal standards (see GC 4450(b) and CBC §101.17.11).
*** In addition to adult rail. Maintain 9” minimum vertical clearance between upper and lower handrails to help prevent entrapment.

Fig 15-A. Alternative Dimensions for Children’s Use

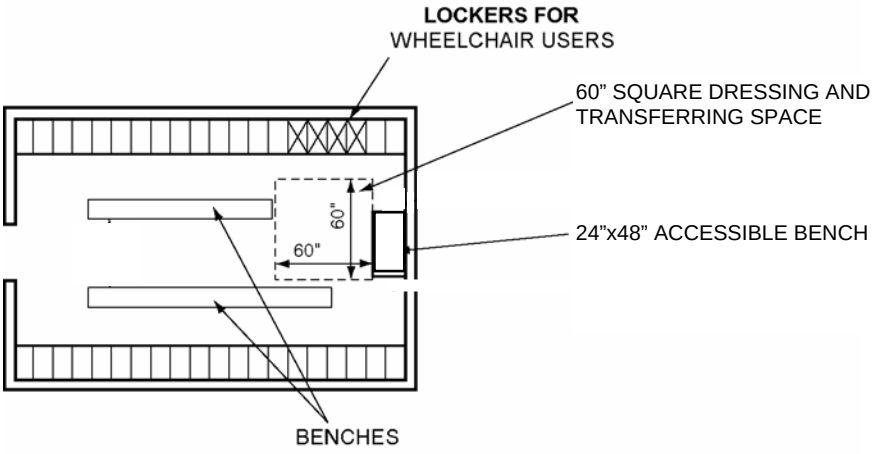

Fig 15-B. Locker Rooms

16	Project designer (PD) shall address the following marked or circled items, and any additional plan review comments on drawings and specifications before scheduling a back check appointment for access compliance (AC). Any questions or points of disagreement must be resolved prior to back check by fax to plan reviewer (PR).	Justification / Reference or Code Citation	Headings / Comments / Notes & Examples
	Check List 16. ALARMS		
16.1	For general scoping requirements and exceptions see also **DSA/AC Checklist 1**. To be reviewed in coordination with Fire/Life/Safety.		
	ALARMS / EMERGENCY WARNING SYSTEMS		
16.2	If emergency warning systems are provided, then they shall include both audible alarms and visual alarms complying with NFPA 72 as amended in Chapter 35 of Title 24 and the ADA Stds. EXCEPTION: Emergency warning systems in medical care facilities may be modified to suit standard health care alarm design practice.	CBC 1114B.2.4 ADA Stds. 4.1.3(14)	Alarms/emergency warning systems/accessibility Accessible buildings: new construction
16.3	When installation of an emergency warning system is required in a building, provide names or numbers, and function (relevant to the occupancy type and use) for all rooms and areas.	CBSC Part 1 4-317(b)	Plans
16.4	Provide visual alarm signals (strobe lights) in all common-use areas and indicate location and intensity on plans. Common use areas include (but are not limited to) the following areas: **1.** Toilet and bathing facilities. **2.** Classrooms and locker rooms. **3.** Band and music practice rooms. **4.** Gymnasiums and multipurpose rooms. **5.** Occupational shops. **6.** Occupied rooms where ambient noise impairs hearing of the fire alarm. **7.** Corridors, hallways, and lobbies. **8.** Cafeterias, meeting and conference rooms. **9.** Any rooms frequently used by persons with hearing impairments (such as HIP or speech therapy classrooms). **10.** Filing, photocopy, and employee break rooms. **11.** Dressing, examination, treatment rooms, and similar spaces that are not used solely as employee work areas. **12.** Any other areas for common use.	CBC 1114B.2.4 CBC 204-C DSA IR 11B-1 ADA Stds. 4.28.1	Alarms/emergency warning systems/accessibility Definitions Alarms – General See ATBCB Technical Bulletin at http://www.access-board.gov/adaag/about/bulletins/alarms.htm <u>DEFINITION:</u> COMMON-USE AREAS: Refers to those interior and exterior rooms, spaces, or elements that are made available for the use of a restricted group of people (for example, occupants of a homeless shelter, the occupants of an office building, or the guests of such occupants). <u>NOTE:</u> ADAAG requirements for alarm systems may be more stringent than those in Ch. 35 or NFPA 72.
16.5	Strobe lights must provide 75 candela min intensity @ 50’	ADA Stds. 4.28.3(4)	Visual alarms
16.6	Provide note or indicate on plan installation height of strobe light to be between 80” and 96” AFF or be at least 6” below the ceiling, whichever is lower.	ATBCB Bulletin	Technical bulletin: Visual alarms
16.7	No place in common corridors shall be more than 50’ from the strobe light.	ADA Stds. 4.28.3(8)	Visual alarms

© 2006 DSA/OUD

	Project designer (PD) shall address the following marked or circled items, and any additional plan review comments on drawings and specifications before scheduling a back check appointment for access compliance (AC). Any questions or points of disagreement must be resolved prior to back check by fax to plan reviewer (PR).	Justification / Reference or Code Citation	Headings / Comments / Notes & Examples
	Check List 16. ALARMS		
16.8	In transient lodging facilities, when units and sleeping accomodations have visual alarms in place, the signal shall be visible in all areas of the unit or room. Visual alarm shall be connected to building emergency alarm system, or shall have a standard 110-volt electrical receptacle into which such an alarm can be connected and a means by which a signal form the building emergency alarm system can trigger such an auxiliary alarm.	CBC 1111B.4.5.1 ADA Stds. 4.28.4 ATBCB Bulletin	Places of transient lodging - Visual alarms Auxiliary alarms Visual Alarms
16.9	Provide note or indicate on plan installation height of fire alarm initiating device (pull box) to be at 48” AFF o.c. EXCEPTION: Enforcement officials shall not retroactively require fire alarm initiating devices be relocated to a 48-inch height.	CEC 760.16	Fire Alarm Manual Pull Stations
16.10	All areas to be “strobed” shall have either a direct line of sight or its reflection from adjacent walls and ceiling must be of an intensity that will raise the overall light level sharply, but not so intense as to be unsafe for direct viewing at a specified mounting height.	ATBCB Bulletin	Visual alarms
16.11	Provide front and parallel approach at newly installed fire alarm initiating device.	CBC 1117B.6	Controls and operating mechanisms
16.12	Indicate accessible operating hardware at initiating device (i.e., not requiring tight grasping, pinching, or twisting of the wrist, and force less than 5 lbf)	CBC 1117B.6 #4 ADA Stds. 4.27.4	Operation Operation
16.13	Fire alarm initiating device must be located on the accessible route of travel.	CBC 1117B.6	Controls and operating mechanisms
16.14	Fire alarm initiating device cannot be located where a person using a wheelchair would be forced to reach over an obstruction greater than 10” deep.	CBC 1118B.6 CBC Fig. 11B-5D(b)	Side reach High and low side reach limits
	FIRE EXTINGUISHERS		
16.15	Provide note or indicate on plan or elevation height of fire extinguisher cabinet opening hardware to be at 48” AFF max.	CBC 1118B.5	Forward reach
16.16	Provide front and parallel approach at newly installed fire extinguishers.	CBC 1117B.6	Controls and operating mechanisms
16.17	Indicate accessible opening hardware at fire extinguisher cabinet (e.g., U-pull and latch force less than 5 lbf).	CBC 1125B.4	Storage - Hardware

© 2006 DSA/OUD

17	Project designer (PD) shall address the following marked or circled items, and any additional plan review comments on drawings and specifications before scheduling a back check appointment for access compliance (AC). Any questions or points of disagreement must be resolved prior to back check by fax to plan reviewer (PR).	Justification / Reference or Code Citation	Comments / Notes / Examples
	Check List 17. SIGNAGE		
17.1	For additional scoping requirements and exceptions see also applicable **DSA/AC Checklist 1.**		NOTE: See Section 1111B.4.5 and **Checklist 22** for additional requirements in motels, hotels and other residential occupancies.
17.2	Provide details and specs for all signs applicable to this project and indicate the provision/installation on site plans, floor plans and elevations.	CBSC Part 1 4-317(b)	Plans
17.3	Signs that are located on or at doors must be included in the door schedule, or provide a separate signage schedule which references the door mark for each sign.	CBSC Part 1 4-317(b)	Plans
17.4	Reference signage details for each door and indicate message (e.g., “TO EXIT”, “GIRLS”, “124”, etc).	CBSC Part 1 4-317(b)	Plans
17.5	Provide and indicate detail(s) for the following sign(s):		
	1. "Tow-away" signs at parking lot entrance (or at stall).	CBC 1129B.5	Identification of parking spaces for off-street parking facilities
	2. Accessible parking signs, including van signs.	CBC 1129B.5	Identification of parking spaces for off-street parking facilities
	3. International Symbol of Accessibility (ISA) at accessible passenger loading zones. See CBC Figure 11B-6.	ADA Stds 4.1.2(7)(b)	Building signage
	4. International Symbol of Accessibility at all accessible entrances. See CBC Figure 11B-6.	CBC 1127B.3	Signs
	5. Directional signage at all inaccessible entrances, directing persons to the nearest accessible entrance.	ADA Stds 4.1.2(7)(c)	Building Signage
	6. Assistive Listening System (ALS) sign indicating availability of ALS, posted in a prominent place. See CBC Figure 11B-14C.	CBC 1104B.2 #4	Assistive-listening systems in assembly areas - Signage
	7. Raised letters/California Contracted Grade 2 Braille EXIT signs at all exit doors (in addition to the overhead/low-level illuminated exit signs).	CBC 1003.2.8.6.1	Tactile exit signage
	8. California restroom symbols (circle/triangle) on door leaf, (including ISA if restroom is wheelchair accessible).	CBC 1115B.5	Bathing and toilet facilities - Identification symbols
	9. Restroom identification sign on wall including raised letters, California Contracted Grade 2 Braille, and if desired, a gender pictogram.	CBC 1117B.5.1.2	Identification signs
	10. International Symbol of Accessibility at accessible seating: aisle seats, companion seats, and wheelchair spaces at bleachers are to each be identified by a sign or marker. Signage notifying patrons of the availability of such seats shall be posted at the ticket office.	CBC 1104B.3.4 #1 CBC 1117B.5.8.1 & DSA Policy 98-05	Auditoriums, assembly halls, theater and related facilities - Wheelchair spaces Symbols of accessibility Accessible seating in folding bleacher units
	11. Area of evacuation assistance identification. Sign shall be illuminated when exit sign illumination is required. Include evacuation instructions in each area for evacuation assistance.	CBC 1114B.2.2.5	Areas for evacuation assistance - Identification

© 2006 DSA/OUD

	Project designer (PD) shall address the following marked or circled items, and any additional plan review comments on drawings and specifications before scheduling a back check appointment for access compliance (AC). Any questions or points of disagreement must be resolved prior to back check by fax to plan reviewer (PR).	Justification / Reference or Code Citation	Comments / Notes / Examples
	Check List 17. SIGNAGE		
	12. Volume control sign at telephones. See CBC Figure 11B-14B.	CBC 1117B.2.8	Telephone equipment for hearing Impaired persons
	13. TTY identification signage and/or TTY directional signage. See CBC Figure 11B-14A.	CBC 1117B.2.9.2 #3 CBC 1117B.2.9.3	Text telephones – General Signage
	14. Building directory or lobby signage informing building users that specific sanitary facilities and/or elevators for public use have been remodeled.	CBC 1117B.5.8.1.3	Symbols of accessibility - Information posted
	15. Warning signs at inaccessible exits indicating the closest accessible exit and signage indicating the direction to areas of rescue assistance.	CBC 1133B.1.1.1.1 - Exception 2 & ADA Stds 4.3.11.5	Entrances and exterior ground floor exit doors Accessible route - Identification
	16. Enclosed stairway signage.	CBC 1133B.4.3	Tactile stair identification sign
	17. Elevator and elevator lobby signage.	CBC 1116B.1.15	Elevators - Doorjamb marking
	18. Platform lift signage.	CESCC 7-3094.2(i)	Vertical platform (wheelchair) lifts
	19. Evacuation plans.	C.C.R. Title 19, §3.09	Emergency planning and information
	20. No Smoking & Cleaner Air signage.	CBC 1117B.5.1 #3 CBC 1117B.5.11	Informational signs Cleaner air symbol
17.6	Indicate and specify materials, colors, and type styles to be used for all accessible signage (visual and tactile), according to the following criteria:	CBC 1117B.5 & ADA Stds 4.30	Signs and identification Signage
	1. Except for reflective parking and traffic signs, all identification, informational and directional signs must have non-glare backgrounds and characters.	CBC 1117B.5.2 & ADA Stds 4.30.5	Finish and contrast Finish and contrast
	2. Characters on signs shall have a width-to-height ratio of between 3:5 and 1:1 and a stroke width to height ratio of between 1:5 and 1:10.	CBC 1117B.5.3	Proportions
	3. Characters and numbers on signs shall be sized according to the viewing distance from which they are to be read. The minimum height is measured using an upper case **X**. Lowercase characters are permitted. For signs suspended or projected above the finish floor in compliance with CBC Section 1133B.8.6, the min character height shall be 3”.	CBC 1117B.5.4	Character height
	4. Add specifications for visual characters as follows: Visual characters can be serif or sans serif and upper and lowercase characters may be used for visual characters.	CBC 1117B.5.4	Character height
	5. On signs installed on poles or pylons, when the bottom edge of the sign is at less than 80 inches AFF, provide 0.125 inch radius corners and eased edges.	CBC 1133B.8.6.3	Protruding objects - Free-standing signs
17.7	Add specifications for tactile characters as follows: raised characters must use sans serif font, in all uppercase characters. Simple or heavy serif fonts of any kind are not allowed.	CBC 1117B.5.5 #1	Character type
17.8	California Contracted Grade 2 Braille must accompany raised text characters.	CBC 1117B.5.5 #1	Character type

© 2006 DSA/OUD

	Project designer (PD) shall address the following marked or circled items, and any additional plan review comments on drawings and specifications before scheduling a back check appointment for access compliance (AC). Any questions or points of disagreement must be resolved prior to back check by fax to plan reviewer (PR).	Justification / Reference or Code Citation	Comments / Notes / Examples
	Check List 17. SIGNAGE		
17.9	California Braille dots within cells must be 1/10” o.c. Cells must be 2/10” apart. Measure cell distance from the center of top dot location of column two of the first cell to the center of top dot location of column one of the next cell on right, within the same word. Dots must be 1/40” high at dot apex.	CBC 1117B.5.6	Braille
17.10	Indicate material and color descriptions and sample typestyles in plans as follows:	CBSC Part 1 4-317(b)	Plans
	1. Include color and material specifications for sign message backgrounds and characters to demonstrate minimum contrast and non-glare characteristics.	CBC 1117B.5.2	Finish and contrast
	2. Show 1” high examples of uppercase characters “I,” “O,” and “X”, in chosen typestyle(s), indicating whether style is for tactile characters, visual characters, or both.		
17.11	Provide character and symbol size for all signs as follows:		
	1. On visual signs, size characters and symbols according to viewing distance. Signs mounted with bottom edge at or above 80” AFF must have 3” high min characters.	CBC 1117B.5.4	Character height
	2. On tactile signs, raised characters must be 5/8” to 2” high.	CBC 1117B.5.5 #2	Character size
	3. Pictorial symbols (pictograms) that identify rooms and spaces, such as gender pictograms for restrooms must be in a 6” min high field directly above accompanying raised text and California Contracted Grade 2 Braille. No characters or Braille in field.	CBC 1117B.5.5 #3	Pictorial symbol signs (pictograms) NOTE: Pictograms and other symbols, such as ISAs, which are included on signs with raised characters and Braille are not required to be raised.
17.12	Where size is dictated by code, specify exact sizes and material thickness. For instance, geometric symbol signs are 1/4" thick, and have 12” measurements.	CBSC Part 1 4-317(b)	Plans
17.13	For exterior wayfinding signs, determine all decision points on site, beginning at pedestrian entrances, bus stops, parking lots and drop off points, where accessible route of travel deviates from regular route. Specify and locate on plan directional or informational sign for each decision point so that steps do not have to be retraced. Sign must include ISA and appropriate arrow and/or text. Determine appropriate size by distance from which sign will be viewed and mounting height of sign.	CBSC Part 1 4-317(b), CBC 1127B.3 & ADA Stds 4.30.3	Plans Exterior routes of travel - Signs Character height
	ISA must be white on Federal Blue background, with non-glare surface.	CBC 1117B.5.8.1.1	Color of symbol
17.14	Place the International Symbol of Accessibility (ISA) at each accessible building entrance. Where all entrances are not accessible, place directional or informational sign so that steps do not need to be retraced, to direct from inaccessible to accessible entrances. Include ISA on sign along with appropriate arrow and/or text.	CBC 1117B.5.8.1.2	Entrance signs NOTE: The ISA, when included on a tactile sign, does not require any accompanying text, either visual or tactile.

© 2006 DSA/OUD

	Project designer (PD) shall address the following marked or circled items, and any additional plan review comments on drawings and specifications before scheduling a back check appointment for access compliance (AC). Any questions or points of disagreement must be resolved prior to back check by fax to plan reviewer (PR).	Justification / Reference or Code Citation	Comments / Notes / Examples
	Check List 17. SIGNAGE		
17.15	When interior accessible route of travel diverges from regular route, and when one is not immediately visible from the other, (for instance, elevator is not adjacent to stair or lift to stage platform is behind door) or when all facilities such as restrooms, drinking fountains, telephone equipment and ground floor exits are not accessible, specify and locate on plan informational and/or directional signs, to include appropriate Symbol of Accessibility and text such as "Restroom", "Elevator" or "TTY" along with brief text and arrows to indicate location of accessible elements. Locate signs at decision points so that steps will not have to be retraced.	CBSC Part 1 4-317(b), CBC 1117B.5.8.1.2 & CBC 1117B.5.8.1.3	Plans Entrance signs Information posted
17.16	Provide sign schedule to show identification of all permanent rooms and spaces, including restrooms and exits, with raised characters accompanied by California Contracted Grade 2 Braille, in compliance with standards for tactile character and Braille signs. Requirement applies to all such rooms and spaces whether entered from interior hallways, or by individual exterior entrances. Indicate on schedule any accompanying visual text and symbols or pictograms.	CBC 1117B.5.1 #2	International symbol of accessibility - Identification signs
17.17	Specify appropriate tactile exit sign for each exit door. Use terminology established by California State Fire Marshal for tactile exit signs. For ground floor doors that exit to exterior, use "EXIT." For door leading directly into an exit stairway or ramp, use "EXIT STAIR (or RAMP) DOWN (or UP)" as appropriate. Each exit door that leads directly to a grade-level exterior exit by means of an exit enclosure or an exit passageway and each exit access door from an interior room or area to a corridor or hallway that is required to have a visual exit sign shall be identified by a tactile exit sign with the words, "EXIT ROUTE." For horizontal exit (very rare) use "TO EXIT."	CBC 1003.2.8.6.1	Tactile exit signage - Where required
	1. In buildings with more than one floor and with enclosed stairwells, include in sign schedule required tactile floor level identification numbers, accompanied by California Contracted Grade 2 Braille.	CBC 1133B.4.3 & CBSC Part 1 4-317(b)	Tactile stair level identification sign Plans
	2. Show location of tactile exit signs on plan - adjacent to door inside stairwell at each floor level landing.		
17.18	Provide drawings for identification signs as follows:		
	1. Show layout of typical sign indicating position of raised text in relationship to Braille and any other raised elements on sign, such as borders or frames. Indicate location of pictograms and symbols on tactile identification signs and geometric door signs as appropriate by providing scale drawings of each sign type.	CBSC Part 1 4-317(b) & CBC 1117B.5	Plans Signs and identification
	2. Geometric symbol door signs for restrooms must contrast with door (dark on light or light on dark). For unisex door signs, triangle must contrast with circle, which must contrast with door. Entire background color of geometric symbol sign must contrast with door. It is not allowed to have a thin contrasting border around symbol, with	CBC 1115B.5 CBC 1117B.5.8.1	Identification symbols Symbols of accessibility

© 2006 DSA/OUD

Check List 17. SIGNAGE

		Justification / Reference or Code Citation	Comments / Notes / Examples
	remainder of sign background in a non-contrasting color. ISA, contrasting with background, may be on sign.		
	3. If a gender pictogram is desired on geometric symbol sign, it must be repeated above raised characters and Braille on tactile sign adjacent to door. ISA may be included on either tactile sign, next to gender pictogram, or may be only on geometric symbol sign, as desired. No raised text or Braille is to be included on geometric door sign.	CBC 1115B.5, CBC 1117B.5.1 #2 & CBC 1117B.5.5 #3	Identification symbols Identification signs Pictorial symbol signs
	4. For stair level sign at ground level, tactile 5-pointed star shall be placed to the left of floor number. All star points shall be of equal length, and star shall be same height as floor number (Braille translation for star is "Main").	CBC 1133B.4.3	Tactile stair level identification sign NOTE: Do not confuse with 12" Fire Code sign required in all enclosed stairwells in buildings of four or more floors by Title 19. The 12" sign does not require raised characters or Braille, and shall not be located immediately adjacent to the door leading from stairwell into corridor.
17.19	Provide additional required signs on schedule as appropriate:		
	1. Locate accessible phone equipment on plan and specify appropriate Symbols of Accessibility, the TTY Symbol for text telephones, and the Volume Control Symbol for volume control phones. If there are banks of phones with no accessible equipment, indicate placement of sign that directs from those phones to accessible phones.	CBSC Part 1 4-317(b), CBC 1117B.2.9.3 & CBC 1117B.2.8	Plans Text telephones - Signage Telephone equipment for hearing impaired persons
	2. Determine if an assistive-listening system is required and specify appropriate informational sign with symbol. Locate signs at box office, lobby, entrance, or at administration building, as appropriate. More than one sign can be provided.	CBC 1104B.2 #4	Assistive-listening systems in assembly areas - Signage
	3. When buildings have been remodeled to provide accessible elements such as restrooms and elevators, post sign at entrance or in lobby informing of available features.	CBC 1117B.5.8.1.3	Symbols of accessibility - Information posted
	4. In buildings with more than one floor that has interior corridors, elevators and/or enclosed stairwells, evacuation plans are required. Locate these plans inside each main building entry, each elevator lobby, and in close vicinity of each door leading to enclosed stairwell.	CCR Title 19, §3.09	Emergency planning and information
	▪ Evacuation plans are directional and informational and must conform to standards for visual signs. They must be non-glare, high contrast, and use readable text and symbols of appropriate size.	CBC 1117B.5.1 #3	Direction and informational signs
	▪ Hotels and lodging houses must include evacuation plans in each room, and must provide evacuation information usable by persons with vision impairments.	CFC 1303.3.5.2	Means of egress diagrams

© 2006 DSA/OUD

	Project designer (PD) shall address the following marked or circled items, and any additional plan review comments on drawings and specifications before scheduling a back check appointment for access compliance (AC). Any questions or points of disagreement must be resolved prior to back check by fax to plan reviewer (PR).	Justification / Reference or Code Citation	Comments / Notes / Examples
	Check List 17. SIGNAGE		
17.20	Specify installation of signs and show location of signs on plan.	CBSC Part 1 4-317(b)	Plans
	1. Informational and directional signs can be installed on walls, doors, posts, or in the interiors of buildings, projecting from walls or hanging from the ceiling in corridors, as long as the location will allow them to be easily found and read by persons with various disabilities.		
	▪ Specify location of TTY Symbol or Volume Control Symbol high enough so that another person can see the sign even when the telephone is in use.		
	▪ Specify location of International Symbol of Hearing Loss to indicate the availability of an assistive-listening system outside the entrance to the room where it can be used. In addition, place signage in lobbies, at ticket windows, or at entrances to offices that must be reserved for use by persons with hearing impairments.	CBC 1104B.2 #4	Assistive listening systems in assembly areas - Signage
	2. Specify location of tactile signs as follows: Tactile signs must be installed adjacent to the specific door they identify, at 60” o. c. AFF. Signs must not be installed behind obstructions, and the reader must be able to approach the sign within 3” without being hit by the swing of a door.	CBC 1117B.5.1 #2 & CBC 1117B.5.7	International symbol of accessibility - Identification signs Mounting location and height
	3. Specify locations of evacuation plans so that the lower edge of the information sign is no more than 48” AFF.	CCR Title 19, §3.09	Emergency planning and information

© 2006 DSA/OUD

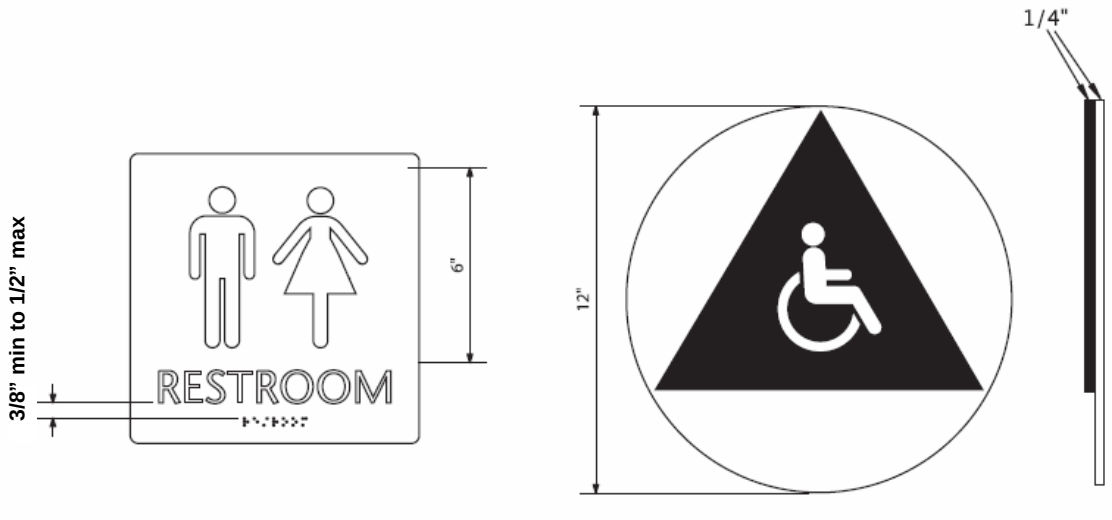

Fig 17-A. Tactile Restroom Signage and Contrasting Restroom Symbols for Unisex Restroom

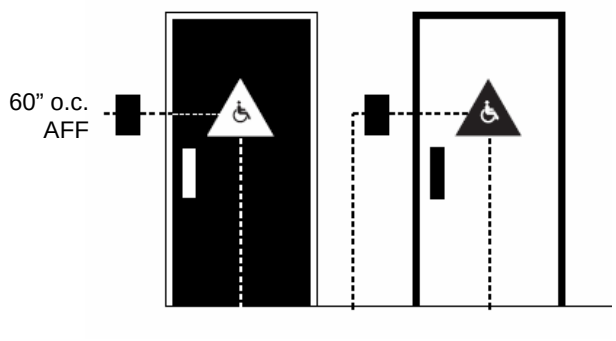

Fig 17-B. Contrasting Restroom Symbols Centered on Door Leaf at 60" o.c. AFF

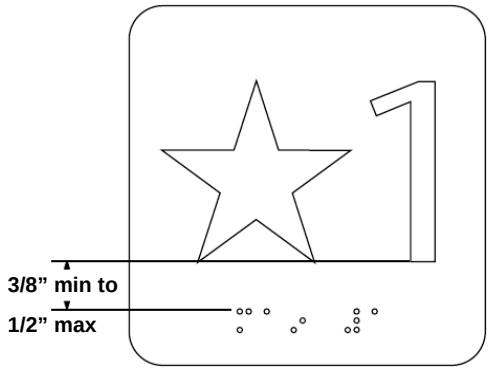

Fig 17-C. Tactile Stair Identification Sign with Exit Discharge Level Star

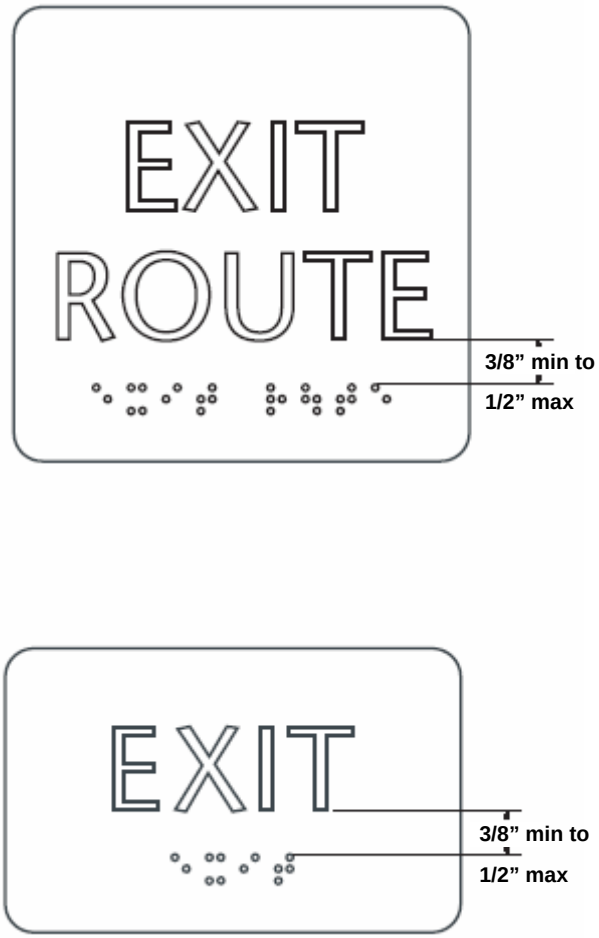

Fig 17-D. Tactile Exit Route and Exit Signs

© 2006 DSA/OUD

18	Project designer (PD) shall address the following marked or circled items, and any additional plan review comments on drawings and specifications before scheduling a back check appointment for access compliance (AC). Any questions or points of disagreement must be resolved prior to back check by fax to plan reviewer (PR).	Justification / Reference or Code Citation	Headings / Comments / Notes & Examples
	Check List 18. ASSEMBLY USE AREAS		
18.1	For additional scoping requirements and exceptions see also applicable **DSA/AC Checklist 1.**		
18.2	For the purpose of Access Compliance review only: Regardless of occupancy load or classification, the requirements of CBC 1104B are not limited to Group A classified facilities or portions of facilities but do also apply to any facility or portion of facility which is used, either full-time or part-time, or can be characterized as an assembly area.	ADA Stds. 3.5	DEFINITION: ASSEMBLY AREA: A room or space accommodating a group of individuals for recreational, educational, political, social, civic, or amusement purposes, or for the consumption of food and drink.
ASSISTIVE LISTENING SYSTEMS (ALS)		CBC 1104B.2	
18.3	Provide and indicate an ALS in all assembly areas, conference rooms, and meeting areas that are affected by project scope, whether device is in this contract or provided by the owner.		NOTE: If ALS is N.I.C. or to be provided by owner, state so on the plan and provide specs for equipment.
18.4	Provide and indicate a permanently installed assistive-listening system in space/room if: **1.** The space/room accommodates at least 50 persons, or has an audio-amplification system, and **2.** The space/room has fixed seating.	CBC 1104B.2 #6 ADA Stds 4.1.3(19)(b)	Assistive-listening systems in assembly areas- Portable systems Assembly areas NOTE: Portable ALS may serve more than one space/room.
18.5	Indicate location of ALS sign(s) on plan for each space/room required to be equipped with an ALS and indicate text. This requirement applies even if the system is N.I.C. 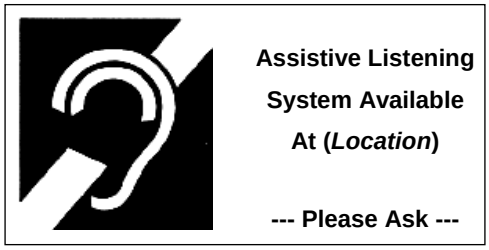 **Assistive Listening System Available At (*Location*)** **--- Please Ask ---**	CBC 1104B.2 #4 CBSC Part 1 4-317(b)	Signage Plans
18.6	Reference detail of ALS signage.	CBSC Part 1 4-317(b)	Plans
18.7	Provide ratio table for each space/room, indicating total number of seats and number of personal receivers required (4% min but never less than 2 receivers).	CBC 1104B.2 #1 CBSC Part 1 4-317(b)	Number of personal receivers required Plans
18.8	Specify type of ALS even if the system is N.I.C. (See http://www.access-board.gov/adaag/about/bulleting/als-index.htm for an explanation of the different types available.)	CBC 1104B.2 #2	Types of listening systems

Project designer (PD) shall address the following marked or circled items, and any additional plan review comments on drawings and specifications before scheduling a back check appointment for access compliance (AC). Any questions or points of disagreement must be resolved prior to back check by fax to plan reviewer (PR).

Check List 18. ASSEMBLY USE AREAS

		Justification / Reference or Code Citation	Headings / Comments / Notes & Examples
AUDITORIUMS, ASSEMBLY HALLS, THEATERS, AND RELATED FACILITIES		CBC 1104B.3	
18.9	Provide a seating layout plan showing individual seats or dimensioned benches/bleachers.	CBSC Part 1 4-317(b)	Plans
18.10	Where fixed or semi-permanent seating is provided identify on seating layout plan the location of:	CBC 1104B.3.6 & CBC 1104B.3.5	Size of wheelchair location Placement of wheelchair locations
	1. Wheelchair spaces (show 33” x 48” or 33” x 60”)	CBC 1104B.3.4	Wheelchair spaces
	2. Companion seats (e.g., mark seat with a “C”)	CBC 1104B.3.5	Placement of wheelchair locations
	3. Semi-ambulant seats (e.g., mark seat with an “S”)	CBC 1104B.3.8	Seating for semi-ambulant individuals
	4. Transfer or aisle seats (e.g., mark seat with a “T”)	CBC 1104B.3.4	Wheelchair spaces
18.11	Indicate the total number of seats and number of wheelchair spaces, companion seats, semi-ambulant seats, and transfer seats.	CBC 1104B.3.4 CBC 1104B.3.8	Wheelchair spaces Seating for semi-ambulant individuals

Seating Capacity	W	C	S	T	ALS Receiver
4 to 26	1	1	2	1	2
27 to 50	2	2	2	1	2
51 to 100	4	4	2	1	4%
101 to 200	4	4	2	1%	4%
201 to 300	4	4	1%	1%	4%
301 to 500	6	6	1%	1%	4%
501+	6+1 per add’l 100 seats over 500	6+1 per add’l 100 seats over 500	1%	1%	4%

NOTE:
Companion seats cannot be included in the count for semi-ambulant seats.

18.12	Indicate slope at wheelchair space to be 2% max in any direction.	CBC 1104B.3.4 #3	Wheelchair spaces
18.13	Indicate size of wheelchair space to be: **1.** 33” x 48” for front or rear access. **2.** 33” x 60” for side access.	CBC 1104B.3.6 & CBC Fig. 11B-15	Size of wheelchair location Location
18.14	Provide detail (1/4” scale) of area, showing all relevant dimensions, including wheelchair maneuvering space, all adjacent slopes and level changes, required egress, and accessible routes of travel.	CBSC Part 1 4-317(b)	Plans
18.15	Provide additional space in front or behind designated wheelchair space to ensure safe and convenient access and egress for persons using wheelchairs and the general public.	CBC 1104B.3.6	Size of wheelchair location

© 2006 DSA/OUD

	Project designer (PD) shall address the following marked or circled items, and any additional plan review comments on drawings and specifications before scheduling a back check appointment for access compliance (AC). Any questions or points of disagreement must be resolved prior to back check by fax to plan reviewer (PR).	Justification / Reference or Code Citation	Headings / Comments / Notes & Examples
	Check List 18. ASSEMBLY USE AREAS		
18.16	Semi-ambulant seating must provide 24" clear leg room from the front edge of the seat to the nearest obstruction. 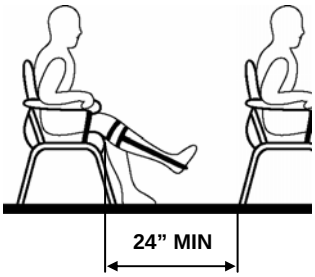 	CBC 1104B.3.8	Seating for semi-ambulant individuals NOTE: Transfer seats are intended to facilitate seating of wheelchair users who wish to transfer to existing seating during an event when fixed seating is provided. Many persons who use wheelchairs are able to transfer to fixed seating with this relatively minor modification.
18.17	In existing facilities where site constraints exist, provide a reasonable portion of transfer seats on or adjacent to a wheelchair accessible POT.	CBC 1104B.3.4 #1	Wheelchair spaces
18.18	Indicate 1% (but not less than one) of all fixed seats to be aisle seats with no armrests on the aisle side, or removable or folding armrest on the aisle side. **1.** Indicate an identifying sign or marker (ISA) to be installed at each seat. **2.** Indicate signage to be provided at ticket office notifying patrons that such seating is available.	CBC 1104B.3.4 #1	Wheelchair spaces
18.19	Where total seating capacity exceeds 300, provide accessible wheelchair seating in more than one location.	CBC 1104B.3.5	Placement of wheelchair locations
18.20	Arrange seating layout to provide integral seating for persons using wheelchairs and their companions (shoulder to shoulder).	CBC 1104B.3.5	Placement of wheelchair locations
18.21	Arrange seating layout to provide choice of admission prices and lines of sight for people using wheelchairs and their companions.	CBC 1104B.3.3 ADA Stds. 4.33.3	Variety of locations Placement of wheelchair locations
18.22	Provide elevation or section to indicate how lines of sight requirement is met.	CBSC Part 1 4-317(b) & CBC 1104B.3.5	Plans Placement of wheelchair locations
18.23	If removable seats are planned, indicate on plan assigned storage space for removable seats.	CBSC Part 1 4-317(b)	Plans NOTE: Public entities must keep wheelchair spaces free from removable seats in all but the most unusual cases (e.g., if an event is sold out and there were no requests for wheelchair spaces, removable seats can be installed and sold to non-disabled patrons).

© 2006 DSA/OUD

18	Project designer (PD) shall address the following marked or circled items, and any additional plan review comments on drawings and specifications before scheduling a back check appointment for access compliance (AC). Any questions or points of disagreement must be resolved prior to back check by fax to plan reviewer (PR).	Justification / Reference or Code Citation	Headings / Comments / Notes & Examples
	Check List 18. ASSEMBLY USE AREAS		
18.24	Provide and indicate accessible routes of travel from wheelchair space to performing areas, including stages, arena floors, dressing rooms, locker rooms and other spaces used by performers, and public restrooms.	CBSC Part 1 4-317(b), CBC 1104B.3.10 & CBC 1104B.3.13	Plans Access to performing areas Miscellaneous areas
18.25	Stages, enclosed and unenclosed platforms, orchestra pits and preparation areas must be made accessible. EXCEPTION: a. When DSA finds that requiring compliance for an enclosed or unenclosed platform or depressed area not more than 24” above or below an adjacent accessible level, would create an unreasonable hardship, the enclosed and unenclosed platform or depressed area must be made accessible by a portable ramp with a slope not exceeding 8.3%. b. In existing buildings, when DSA determines that compliance would create an unreasonable hardship, an exception may be granted when equivalent facilitation is provided.	CBC 1104B.3.11	Stages, enclosed and unenclosed platforms, and orchestra pits
18.26	Employee and customer side of all ticket booths, refreshment and concession stands must be made accessible.	CBC 1104B.3.12	Ticket booths
18.27	Provide enlarged detail and elevations for ticket booth, refreshment and concession stands.	CBSC Part 1 4-317(b)	Plans
18.28	Provide signage at ticket office that notifies customers of the availability of the different types of accessible seating and assistive listening devices.	ADA Stds. 4.1.3(19)(a), CBC 1104B.3.4.1, & CBC 1104B.2.4	Assembly areas Wheelchair spaces Signage
18.29	In outdoor assembly use areas (e.g. amphitheater type seating on turf) provide and indicate required ratio of wheelchair and companion seat spaces, located on an accessible path.	CBC 1104B.3.4 & CBC 1104B.3.5	Wheelchair spaces Placement of wheelchair locations
18.30	In amphitheaters, provide warning curb or rails where abrupt changes in level between the accessible route of travel and adjacent seating areas exceed 4” in height.	CBC 1133B.8.1	Warning curbs
18.31	Provide perimeter guardrails, or walls, or fences (42” min high) at all elevated seating areas that are more than 30” above the ground. EXCEPTION: Guardrails at the front of the front row of seats that are not located at the end of an aisle and where there is no cross aisle may have a height of 26” and need not meet the 4” max spacing requirement, however, a mid-rail shall be installed.	CBC 1133B.5.7.5	Perimeter guardrails

© 2006 DSA/OUD

18	Project designer (PD) shall address the following marked or circled items, and any additional plan review comments on drawings and specifications before scheduling a back check appointment for access compliance (AC). Any questions or points of disagreement must be resolved prior to back check by fax to plan reviewer (PR).	Justification / Reference or Code Citation	Headings / Comments / Notes & Examples
	Check List 18. ASSEMBLY USE AREAS		
	STADIUMS, GRANDSTANDS, BLEACHERS, ATHLETIC PAVILIONS, GYMNASIUMS AND MISCELLANEOUS SPORT–RELATED FACILITIES	CBC 1104B.4	
18.32	Accessible seating for stadiums, grandstands, bleachers, athletic pavilions, gymnasiums and miscellaneous sport related facilities must comply with 1104B.3 and items **18.10 through 18.30** of this Checklist.	CBC 1104B.4.1	Spectator seating
	EXCEPTION:		
	At folding bleachers where wheelchair spaces are provided by a cut back in the first rows, and when DSA finds that integrated companion fixed seats cannot be obtained the following design will be accepted: ▪ Provide a 24”x48” clear space for companion seating next to each 33”x48” wheelchair space, with identifying signage on the companion seat. ▪ Provide an ISA on the floor or on the front face of the lowest bleacher row in front of space to identify the wheelchair space. ▪ The number of wheelchair accessible seats must be dispersed equally for each side (home and visitors) and cannot be clustered into one location for each side.	DSA Policy 98-05	Accessible seating in folding bleacher units
18.33	Customer and employee side of all ticket booths, refreshment and concession facilities must be made accessible.	CBC 1104B.3.12 & 28 CFR §35.149	Ticket booths Program accessibility: Discrimination prohibited
18.34	Provide enlarged detail and elevations for ticket booth, refreshment and concession stands.	CBSC Part 1 4-317(b)	Plans
18.35	Provide signage at ticket office that notifies customers of the availability of the different types of accessible seating and assistive listening devices.	ADA Stds 4.1.3(19)(a) CBC 1104B.3.4, & CBC 1104B.2 #4	Assembly areas Wheelchair spaces Signage
18.36	Provide and indicate an accessible route of travel to all participation and activity areas, including the following:	CBC 1104B.4.3	Participation areas
	1. Tennis, racquetball and handball courts.	CBC 1104B.4.3 #1	Participation areas
	2. Gymnasium floor areas and general exercise rooms.	CBC 1104B.4.3 #2	Participation areas
	3. Basketball, volleyball and badminton courts, and bowling lanes.	CBC 1104B.4.3 #3	Participation areas
	4. Swimming pool deck areas and swimming pools.	CBC 1104B.4.3 #4	Participation areas
	5. Athletic team rooms and facilities, playing fields and running tracks.	CBC 1104B.4.3 #5	Participation areas
	6. Club rooms (home and guest).	CBC 1104B.4.4	Clubroom
	7. Sanitary and locker facilities (home and guest).	CBC 1104B.4.5	Sanitary and locker facilities
	8. Baseball/softball player dugout.	CBC 1104B.4.3	Participation areas
		CBC 1104B.4.3 #4	Participation areas

Project designer (PD) shall address the following marked or circled items, and any additional plan review comments on drawings and specifications before scheduling a back check appointment for access compliance (AC). Any questions or points of disagreement must be resolved prior to back check by fax to plan reviewer (PR).	Justification / Reference or Code Citation	Headings / Comments / Notes & Examples
Check List 18. ASSEMBLY USE AREAS		
18.37 Provide pool lift with rigid seat and arm rests or ramp to assist persons with disabilities to access and egress the swimming pool independently.		
18.38 General exception applicable to sanitary & locker facilities, covered by CBC 1104B.4: **1.** When DSA determines that compliance would create an unreasonable hardship, an exception may be granted when equivalent facilitation through the use of other methods or materials. **2.** In existing buildings, when DSA determines that compliance would create an unreasonable hardship, an exception may be granted when all of the following minimum conditions are met: A. 1% of total seats are to be accessible if the seating capacity is less than 5,000. When the capacity exceeds 5,000, 1% plus 1 seat for each additional 2,000 seats are to be accessible. B. Sanitary facilities, ticket booths, clubrooms concession stands and refreshment facilities are accessible. C. One of each type of participation area is usable and accessible.	CBC 1104B.4.5	Sanitary and locker facilities
18.39 Provide vertical access to press boxes, announcer booths and similar facilities.	CBC 1114B.1.2 ADA Stds. 4.1.3(1)	Accessible route of travel Accessible buildings
18.40 Provide perimeter guardrails, or walls, or fences (42” min high) at all elevated seating areas that are more than 30” AFF. EXCEPTION: Guardrails at the front of the front row of seats that are not located at the end of an aisle and where there is no cross aisle may have a height of 26” and need not meet the 4” max spacing requirement, however, a mid-rail shall be installed.	CBC 1133B.5.7.5	Perimeter guardrails
18.41 The open vertical space between footboards and seats shall not exceed 9” when footboards are more than 30” above the ground.	CBC 1133B.5.7.5	Perimeter guardrails
DINING, BANQUET AND BAR FACILITIES	CBC 1104B.5	
18.42 All areas where each type of functional activity occurs must be made accessible. EXCEPTIONS: a. In alteration projects, where DSA determines that compliance would create an unreasonable hardship, an exception may be granted when equivalent facilitation is provided. b. In alteration projects, when legal or physical constraints would not allow compliance with these regulations or	CBC 1104B.5 #3 ADA Stds. 5.1	Functional activity General NOTE: Jurisdictional findings and determinations for exception (b) are subject to an internal DSA appeals process.

© 2006 DSA/OUD

	Project designer (PD) shall address the following marked or circled items, and any additional plan review comments on drawings and specifications before scheduling a back check appointment for access compliance (AC). Any questions or points of disagreement must be resolved prior to back check by fax to plan reviewer (PR).	Justification / Reference or Code Citation	Headings / Comments / Notes & Examples
	Check List 18. ASSEMBLY USE AREAS		
	equivalent facilitation without creating an unreasonable hardship.		
18.43	All floors, levels, and mezzanines of dining areas must be made accessible. EXCEPTION: In alteration projects, where DSA determines that compliance would create an unreasonable hardship, an exception is granted provided that: ▪ A minimum of 75% of the dining, banquet and bar area is on a common level or connected by pedestrian ramps, passenger elevators or special lifts, and, ▪ The same services and decor are provided in an accessible space usable by the general public and are not restricted to use by people with disabilities.	CBC 1104B.5 #3 CBC 1120B.1 CBC 1120B.2 ADA Stds 5.4	Functional activity Floors within each story Floor surface Dining areas
18.44	Provide and indicate one 30” x 48” clear space for each 20 seats per functional area.	CBC 1104B.5 #4	Seating
18.45	Provide enlarged detail and elevations of accessible section of fixed tables and counters. Indicate	CBSC Part 1 4-317(b) & CBC 1122B	Plans
	1. Surface top to be 28” min and 34” max AFF		Fixed or built-In seating, tables and counters
	2. Knee clearance at bars, counters, and tables must be at least 27” high x 30” wide x 19” deep.	CBC 1122B	Fixed or built-In seating, tables and counters
	3. The accessible portion of the counter must be 60” min in length when food or drink is served at counters exceeding 34” in height for consumption by customers sitting on stools or standing.	ADA Stds. 5.2	Counters and bars
18.46	Provide and indicate adequate maneuvering and passing space behind each wheelchair space (36” with an occupancy load of <10).	CBSC Part 1 4-317(b) CBC Fig. 11B-13 ADA Stds. Fig. 45	Plans Minimum clearances for seating and table
18.47	Wheelchair space must be integrated with general seating.	CBC 1104B.5 #4	Seating
18.48	Provide 36” clear width accessible route of travel to wheelchair seating space.	CBC 1104B.5 #4	Seating
18.49	Provide and indicate 36” min wide (42” preferred) food service aisles.	CBC 1104B.5 #5	Food service aisles
18.50	At food service aisles, provide and indicate all tray slides to be 34” AFF max.	CBC 1104B.5 #5 CBC Fig. 11B-16	Food service aisles Food service lines
18.51	Provide and indicate at least 50% of each type self-service shelves to be within reach ranges.	ADA Stds. 5.5 CBC Fig. 11B-5C CBC Fig. 11B-5D	Food service lines Forward reach Side reach

© 2006 DSA/OUD

	Project designer (PD) shall address the following marked or circled items, and any additional plan review comments on drawings and specifications before scheduling a back check appointment for access compliance (AC). Any questions or points of disagreement must be resolved prior to back check by fax to plan reviewer (PR).	Justification / Reference or Code Citation	Headings / Comments / Notes & Examples
	Check List 18. ASSEMBLY USE AREAS		
18.52	Indicate reach range dimensions for tableware, dishware, condiments, food and beverage display shelves, and dispensing devices.	CBC 1104B.5 #6 CBC Fig. 11B-17	Tableware areas Tableware areas
18.53	Provide and indicate accessible doors to all food preparation areas.	CBC 1104B.5 #8	Food preparation areas
18.54	All toilets, locker and powder rooms, including those serving employees, must be made accessible.	CBC 1104B.5 #7	Restrooms
RELIGIOUS FACILITIES		CBC 1104B.6	
18.55	Provide and indicate access to sanctuaries, assembly areas, platforms, choir rooms, performing areas, and sanitary facilities. EXCEPTION: In alteration projects, where DSA determines that compliance would create an unreasonable hardship, an exception may be granted when equivalent facilitation is provided.	CBC 1104B.6.1 & CBC 1104B.6.2	General Sanctuary
18.56	Provide and indicate access to raised platforms, choir rooms, choir lofts, performing areas, and other similar areas. EXCEPTION: In alteration projects, where DSA determines that compliance would create an unreasonable hardship, an exception may be granted.	CBC 1104B.6.2.2	Sanctuary – wheelchair access
18.57	Provide and indicate accessible doors to all classrooms and offices.	CBC 1104B.6.4	Classrooms and offices

© 2006 DSA/OUD

19	Project designer (PD) shall address the following marked or circled items, and any additional plan review comments on drawings and specifications before scheduling a back check appointment for access compliance (AC). Any questions or points of disagreement must be resolved prior to back check by fax to plan reviewer (PR).	Justification / Reference or Code Citation	Headings / Comments / Notes & Examples
	Check List 19. BUSINESS AND MERCANTILE USE AREAS		
19.1	For additional scoping requirements and exceptions see also applicable **DSA/AC Checklist 1.**		
19.2	For the purpose of Access Compliance review only: Regardless of occupancy load or classification, the requirements of CBC 1105B and 1110B are not limited to Group B and M facilities or portions of facilities but do also apply to any facility or portion of facility which is used, either full-time or part-time, or can be characterized as a business or mercantile area.		
OFFICE BUILDINGS, PERSONAL AND PUBLIC SERVICE FACILITIES			
19.3	The following areas in business and professional office facilities must be accessible:	CBC 1105B.3.2	Business & professional offices
	1. Client, visitor, office areas and related toilet facilities.	CBC 1105B.3.2 #1	Business & professional offices
	2. Conference rooms, counseling rooms or cubicles and similar areas.	CBC 1105B.3.2 #2	Business & professional offices
	3. Employee work areas must have 36” wide clear access.	CBC 1105B.3.2 #3	Business & professional offices
	4. Professional medical and dental offices (see also **Checklist 21** for additional requirements.)	CBC 1105B.3.2 #4	Business & professional offices
19.4	The following areas in personal and public service facilities areas must be accessible:	CBC 1105B.3.3	Personal and public service facilities
	1. Client, visitor, office areas, and related toilet facilities.	CBC 1105B.3.3 #1	Personal and public service facilities
	2. Employee work areas must have 36” wide clear access.	CBC 1105B.3.3 #2	Personal and public service facilities
	3. Automated teller machines used by a financial institution and its customers for the primary purposes of executing financial transactions.	CBC 1105B.3.3 #3	Personal and public service facilities
19.5	The following areas in public utility facilities must be accessible:	CBC 1105B.3.4	Public utility facilities
	1. Office areas, meeting rooms and similar areas, and related toilet rooms.	CBC 1105B.3.4 #1	Public utility facilities
	2. Public tour areas, to the extent that such public tours are conducted through or about a facility, or where the public is permitted to walk in such areas.	CBC 1105B.3.4 #2	Public utility facilities - public tour areas
	EXCEPTIONS:		
	a. Facilities located in operational areas which would not have any reasonable availability to or usage by persons who use wheelchairs for mobility are not subject to the wheelchair accessibility requirements.		
	b. When DSA determines that compliance would create an unreasonable hardship, an exception may be granted when equivalent facilitation is provided.		

	Project designer (PD) shall address the following marked or circled items, and any additional plan review comments on drawings and specifications before scheduling a back check appointment for access compliance (AC). Any questions or points of disagreement must be resolved prior to back check by fax to plan reviewer (PR).	Justification / Reference or Code Citation	Headings / Comments / Notes & Examples
	Check List 19. BUSINESS AND MERCANTILE USE AREAS		
	3. Visitors overlook facilities, orientation areas and similar public–use areas, and any sanitary facilities that serve these facilities.	CBC 1105B.3.4 #3	Public utility facilities
	4. Where public parking is provided, parking spaces shall be provided for persons with disabilities.	CBC 1105B.3.4 #4	Public utility facilities
19.6	The following areas in police department, law enforcement, fire department facilities and courtrooms must be accessible:	CBC 1105B.3.5	Police department, law enforcement, fire department facilities and courtrooms
	1. Office areas, conference rooms, classrooms, dormitories, dispatch rooms and similar areas, along with related sanitary facilities.	CBC 1105B.3.5 #1	
	2. Detention–area visitor rooms.	CBC 1105B.3.5 #2	
	3. At least one detention cell facility (with supporting sanitary facilities).	CBC 1105B.3.5 #3	
	4. Courtroom areas, including the judge's chambers and bench, counsel tables, jury box, witness stand and public seating area.	CBC 1105B.3.5 #4	Police department, law enforcement, fire department facilities and courtrooms
SALES ESTABLISHMENTS			
19.7	General sales, display, and office areas, along with related sanitary facilities must be accessible.	CBC 1110B.1.1	General areas
19.8	Provide wheelchair access to sales employee work stations and customer sides of sales or checkout stations.	CBC 1110B.1.2	Work areas
19.9	Provide and indicate the top of required accessible sales and service counters, teller windows, and information counters to be 28" min and 34" max AFF for a length of 36" min on the customer side. EXCEPTIONS: a. Where seated service is provided, for example in banks, insurance offices, travel agencies, etc, counters and fixed tables must provide knee and toe clearances. b. At check stands (see CBC 1110B.1.3 for requirements).	CBC 1122B.4	Height of work surfaces
19.10	Theft-prevention barriers and any device used to prevent the removal of shopping carts from store premises cannot limit access or egress to people in wheelchairs. Provide accessible entry that is equally convenient to that provided for the general public.	CBC 1110B.1.6	Theft-prevention barriers
19.11	Provide and indicate 5% but never less than one accessible fitting or dressing room for each type of use in each cluster of dressing rooms.	CBC 1110B.1.7	Fitting and dressing rooms
19.12	Identify type of use of each dressing room on floor plan (e.g., customer, staff, male, female, family, etc).	CBSC Part 1 4-317(b)	Plans

© 2006 DSA/OUD

Project designer (PD) shall address the following marked or circled items, and any additional plan review comments on drawings and specifications before scheduling a back check appointment for access compliance (AC). Any questions or points of disagreement must be resolved prior to back check by fax to plan reviewer (PR).	Justification / Reference or Code Citation	Headings / Comments / Notes & Examples
Check List 19. BUSINESS AND MERCANTILE USE AREAS		
19.13 Provide enlarged plan and elevations for accessible dressing rooms and indicate the following:	CBSC Part 1 4-317(b) & CBC 1110B.1.7	Plans Fitting and dressing rooms
1. Accessible door or curtain.		
2. Full-length mirror, 18” min wide x 54” min high, bottom at 20” max AFF, and positioned to afford a view to a person on the bench as well as to a person standing.		
3. Clothing hook at 48” max AFF.		
4. Bench or section of bench measuring 24” deep, 48” wide, and 17” to 19” high, and fixed to a wall along the longer dimension.		
5. 60” x 60” clear space in front of the accessible bench section, located in such a manner to allow a person using a wheelchair to make a parallel transfer onto the bench. (Door cannot swing into this clear space.)		
6. Provide ISA on outside of door to accessible dressing room.	CBC 1117B.5.1 #4	Accessibility signs
19.14 Provide and indicate the following minimum circulation aisle and pedestrian way widths at all areas with fixed displays:	CBC 1004.3.2.2 #2 CBC 1105B.3.6 #1, CBC 1110B.2.1 & CBC 1133B.6.2	Width in occupancies without fixed seats Miscellaneous general standards Circulation Width
1. 36” min if displays and similar fixtures or equipment are placed on only one side of the aisle.		
2. 44” min if displays and similar fixtures or equipment are placed on both sides of the aisle.		
19.15 Provide and indicate the following minimum circulation aisle and pedestrian way widths at all areas with non-fixed displays or displays that are N.I.C. to inform the owner of aisle width requirements at displays:	CBC 1004.3.2.2 #2 CBC 1105B.3.6 #1, CBC 1110B.2.1 & CBC 1133B.6.2	Width in occupancies without fixed seats Miscellaneous general standards Circulation Width
1. 36” min if displays and similar fixtures or equipment are placed on only one side of the aisle.		
2. 44” min if displays and similar fixtures or equipment are placed on both sides of the aisle.		
19.16 Provide and indicate 32” min clear door opening at all storage areas.	CBC 1105B.3.6 #2 & CBC 1110B.2.2	Storage areas Storage areas

© 2006 DSA/OUD

20	Project designer (PD) shall address the following marked or circled items, and any additional plan review comments on drawings and specifications before scheduling a back check appointment for access compliance (AC). Any questions or points of disagreement must be resolved prior to back check by fax to plan reviewer (PR).	Justification / Reference or Code Citation	Headings / Comments / Notes & Examples
	Check List 20. EDUCATIONAL USE AREAS		
20.1	For additional scoping requirements and exceptions see also applicable **DSA/AC Checklist 1.**		
20.2	For the purpose of Access Compliance review only: Regardless of occupancy load or classification, the requirements of CBC 1106B are not limited to Group E facilities or portions of facilities but do also apply to any facility or portion of facility which is used, either full-time or part-time, or can be characterized as an educational use area.		
20.3	All laboratories, prep rooms, dark rooms, computer rooms, equipment rooms, teaching facility cubicles, study carrels, libraries, and similar areas must be made accessible. EXCEPTIONS: a. In existing buildings where DSA determines that compliance would create an unreasonable hardship, an exception may be granted when equivalent facilitation is provided. b. In existing buildings where DSA determines that, due to legal or physical constraints, compliance with building standards requirements or equivalent facilitation would create an unreasonable hardship.	CBC 1106B.1	Group E occupancies - General <u>NOTE:</u> Jurisdictional findings and determinations for exception (b) are subject to an internal DSA appeals process.
LABORATORIES (Labs)			
20.4	Provide and indicate 5%, but never less than one accessible workstation of each type of use in labs, science, home economics and other similar specialized classrooms.	CBC 1106B.2 ADA Stds. 4.1.3(18)	Laboratory rooms
20.5	Provide and indicate 5%, but never less than one accessible workstation of each type of use in laboratory preparation rooms, supply rooms, dry rooms, cold rooms, walk-in freezers, sterile rooms, small research laboratories, and areas containing specialized equipment. EXCEPTION: Where DSA determines that compliance would create an unreasonable hardship, such facilities need not be made fully accessible, except that a clear accessible path of travel must be maintained into such rooms.	CBC 1106B.3	Teaching facility cubicles, study carrels, etc.
20.6	Provide and indicate at least one of each type of sink and other specialized equipment such as fume hoods, microscopes, emergency eyewash and showers, etc, associated with the special use activity to be accessible.	CBC 1106B.3	Teaching facility cubicles, study carrels, etc.
20.7	Provide and indicate at least one teaching or demonstration station of each type to be accessible.	CBC 1106B.3	Teaching facility cubicles, study carrels, etc.
20.8	Provide floor plan and indicate: **1.** All workstations and equipment.	CBSC Part 1 4-317(b)	Plans

© 2006 DSA/OUD

	Project designer (PD) shall address the following marked or circled items, and any additional plan review comments on drawings and specifications before scheduling a back check appointment for access compliance (AC). Any questions or points of disagreement must be resolved prior to back check by fax to plan reviewer (PR).	Justification / Reference or Code Citation	Headings / Comments / Notes & Examples
	Check List 20. EDUCATIONAL USE AREAS		
	2. 30” x 48” clear space at each accessible workstation and at accessible equipment.	CBC 1106B.2	Laboratory rooms
	3. Aisle width, maneuvering and turning clearances from room entry to all accessible elements.	CBC 1114B.1.1 CBC 1106B	Facility accessibility – General Accessibility for Group E Occupancies
20.9	Provide and indicate knee clearance at workstation or equipment: 27” high, 30” wide, and 19” deep min.	CBC 1122B.3	Knee clearance
20.10	Provide and indicate height of accessible work surface depending on the type of use between 28” and 34” AFF. .	CBC 1122B.4 ADA Stds. 4.32.4	Height of work surfaces Height of tables or counters
20.11	Provide elevation or manufacturer’s cut sheet for accessible fume hood indicating knee clearance and height of operable parts and controls to be 48” max AFF.	CBSC Part 1 4-317(b)	Plans
20.12	Provide elevation or manufacturer’s cut sheet for accessible emergency shower indicating height of operable parts and controls (e.g., pull-handle) to be 48” max AFF.	CBSC Part 1 4-317(b)	Plans
20.13	Provide elevation or manufacturer’s cut sheet for accessible emergency eyewash indicating centerline of bubbler to be 36” max AFF.	CBSC Part 1 4-317(b)	Plans
20.14	Indicate 48” min aisle width for sink back-up space.	CBC 1118B.4 #1 CBC Fig. 11B-13	Clear floor or ground space for wheelchairs - size and approach
20.15	Provide and indicate reach range dimensions for gas/air/water outlets over an obstruction.	CBC 1118B.5 CBC Fig. 11B-5C(b) ADA Stds. Fig. 5b	Forward reach Maximum forward reach Maximum forward reach
20.16	Provide and indicate lever-action faucets at gas/air/water outlets.	CBC 1117B.6 #4	Controls and operating mechanisms
	TEACHING FACILITY CUBICLES, STUDY CARRELS, COMPUTER CLASSROOMS, AND DARKROOMS		
20.17	Provide and indicate 5%, but never less than one accessible workstation of each type of use at the following teaching facilities: **1.** Cubicles and study carrels. **2.** Computer stations. **3.** Language. **4.** Medical and dental stations. **5.** Audio-visual. **6.** Typing, painting, sculpting, and ceramics studios. **7.** Vocational, wood, and metal shops, including spray booth. **8.** Darkrooms.	CBC 1106B.3	Teaching facility cubicles, study carrels, etc.
20.18	Provide and indicate at least one teaching or demonstration station to be accessible.	CBC 1106B.3	Teaching facility cubicles, study carrels, etc.

© 2006 DSA/OUD

Project designer (PD) shall address the following marked or circled items, and any additional plan review comments on drawings and specifications before scheduling a back check appointment for access compliance (AC). Any questions or points of disagreement must be resolved prior to back check by fax to plan reviewer (PR).	Justification / Reference or Code Citation	Headings / Comments / Notes & Examples

Check List 20. EDUCATIONAL USE AREAS

20.19 Provide floor plan and indicate:	CBSC Part 1 4-317(b)	Plans
1. All workstations and equipment.		
2. 30” x 48” clear space at each accessible workstation and at accessible equipment.	CBC 1118B.4	Clear floor or ground space for wheelchairs
3. Knee clearance and reach ranges, if applicable.	CBC 1122B.3, CBC 1118B	Knee clearance Space allowance & reach ranges
4. Aisle width, maneuvering and turning clearances from room entry to all accessible elements.	CBC 1133B.6.2, CBC 1118B	Aisles - width Space allowance & reach ranges
20.20 Provide accessible door at darkroom.	CBC 1133B.2	Doors

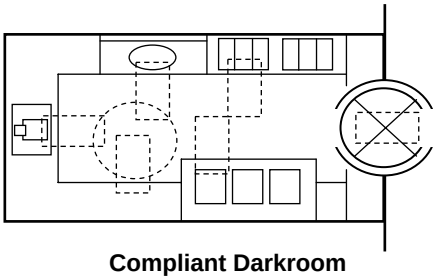

Compliant Darkroom

60” turning radius, 30” x 48” clear space and knee clearance at each different type of equipment, door opening 32”, inner diameter of door 57” clear provided.

LIBRARIES

20.21 Provide and indicate 5%, but never less than one accessible library workstation of each type of use in each area, including:	CBC 1106B.3 &	Teaching facility cubicles, study carrels, etc.
1. Cubicles, reading and study carrels, and similar areas.	ADA Stds. 8.2	Reading and study areas
2. Computer stations.		
20.22 Provide floor plan and indicate:	CBSC Part 1 4-317(b)	Plans
1. Service, information, and checkout counters.		
2. Book drop.		
3. Book stacks, shelves, display tables and cabinets, card files, etc.		
4. Aisle widths, maneuvering and turning clearances throughout the public area.		
5. All workstations and equipment, including copying machines.		
20.23 Indicate height of counter/table top to be 34” max AFF.	CBC 1122B.4	Height of work surface
20.24 Bookshelves must be 54” AFF or less.	CBC 1106B.4 #3	Height of book shelves
EXCEPTION:		
When an attendant is available at all times to assist persons with disabilities to retrieve books, shelves may be located higher than 54” AFF.	CBC 1106B.4 #3	Height of book shelves

© 2006 DSA/OUD

Project designer (PD) shall address the following marked or circled items, and any additional plan review comments on drawings and specifications before scheduling a back check appointment for access compliance (AC). Any questions or points of disagreement must be resolved prior to back check by fax to plan reviewer (PR).

Check List 20. EDUCATIONAL USE AREAS

		Justification / Reference or Code Citation	Headings / Comments / Notes & Examples
20.25	Card catalogs and magazine displays must be 48” max AFF for front reach and 54” max AFF for side reach.	CBC 1106B.4 #4	Card catalogs
20.26	Indicate 44” min width for all main aisles.	CBC 1133B.6.2	Aisles - width
20.27	Indicate 36” min width for all side, range, and end aisles.	CBC 1133B.6.2	Aisles - width NOTE Depending on the occupancy load, Chapter 10 may require wider aisles.
20.28	Dead-end aisles cannot be longer than 20 feet.	CBC 1004.3.2.4, CBC 1005.3.4.6 &	Aisle termination Dead ends
20.29	Provide and indicate the following dimensions when turning around bookshelves:	CBSC Part 1 4-317(b)	Plans
	1. 90 degree turns can be made from a 36” wide aisle into another 36” aisle if the depth of the bookshelf is 48” or greater on the inside dimensions of the turn.	CBC Fig. 11B-5E	Width of accessible route
	2. U-turns around bookshelves less than 48” wide can be made if the aisle width is 42” min and the base of the U-turn space is 48” min. wide.	CBC Fig. 11B-5E	Width of accessible route

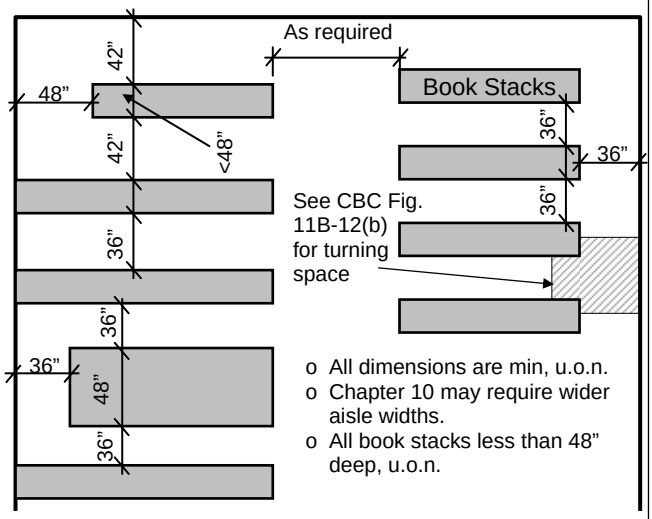

PLAYGROUNDS

20.30	Provide and indicate accessible route of travel to playground.	CBC 1106B.1	General
20.31	Provide and indicate accessible route of travel from playground area to play equipment.	CBC 1114B	Facility accessibility
20.32	Provide and indicate accessible playground equipment. See federal guidelines for acceptable solutions: (see http://www.access-board.gov/play/finalrule.htm).	36 CFR Part 1191	Accessibility guidelines for buildings and facilities

© 2006 DSA/OUD

	Project designer (PD) shall address the following marked or circled items, and any additional plan review comments on drawings and specifications before scheduling a back check appointment for access compliance (AC). Any questions or points of disagreement must be resolved prior to back check by fax to plan reviewer (PR).	Justification / Reference or Code Citation	Headings / Comments / Notes & Examples
	Check List 20. EDUCATIONAL USE AREAS		
20.33	Provide and indicate destination material around playground equipment, to comply with the following standard, referenced by the federal guidelines: **1.** ASTM F 1487-98 Standard Consumer Safety Performance Specification for Playground Equipment for Public Use. **2.** ASTM F 1951-99 Standard Specification for Determination of Accessibility of Surface Systems Under and Around Playground Equipment. **3.** ASTM F 1292-99 Standard Specification for Impact Attenuation of Surface Systems Under and Around Playground Equipment.	36 CFR Part 1191 ADAAG Chapter 15 PRC 5410-5411 H&SC 115725	
20.34	Indicate play components to comply with ADA Guidelines for Play Areas.	PRC 5410-5411	

© 2006 DSA/OUD

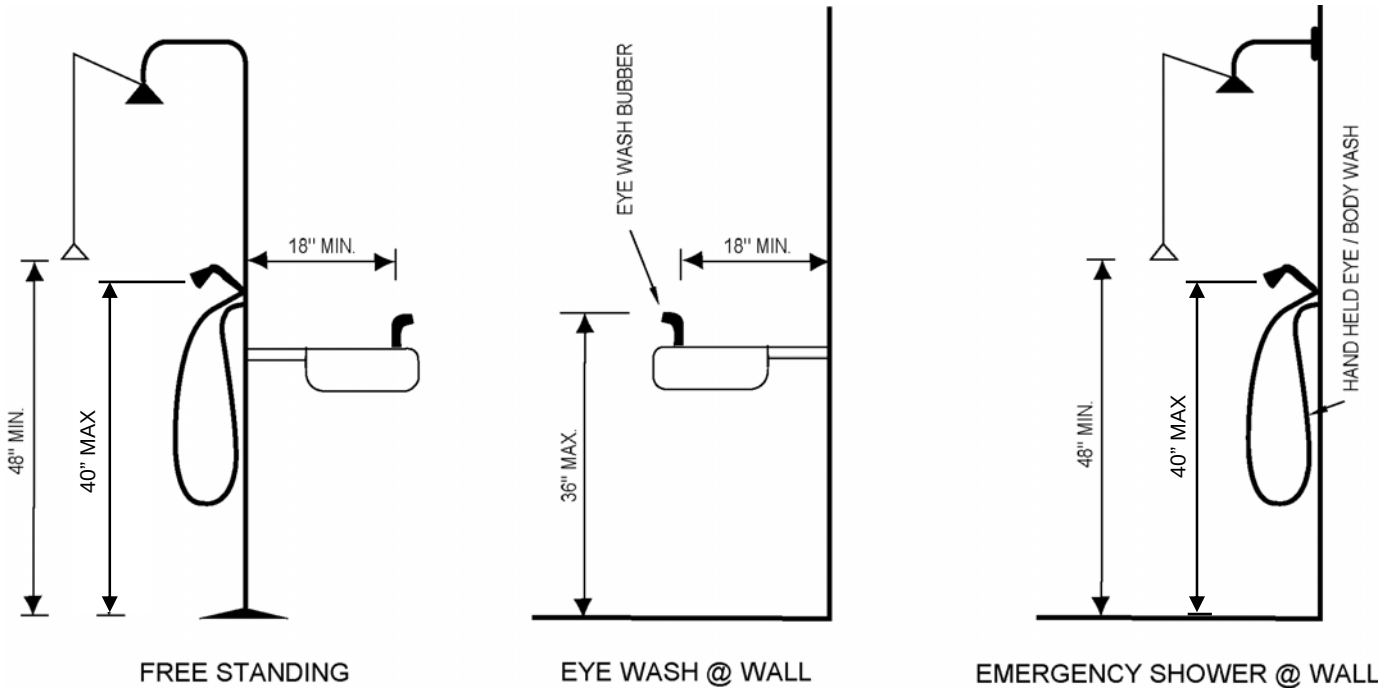

Fig 20-A. Emergency Eyewash and Shower

Fig 20-B. Accessible Fume Hood

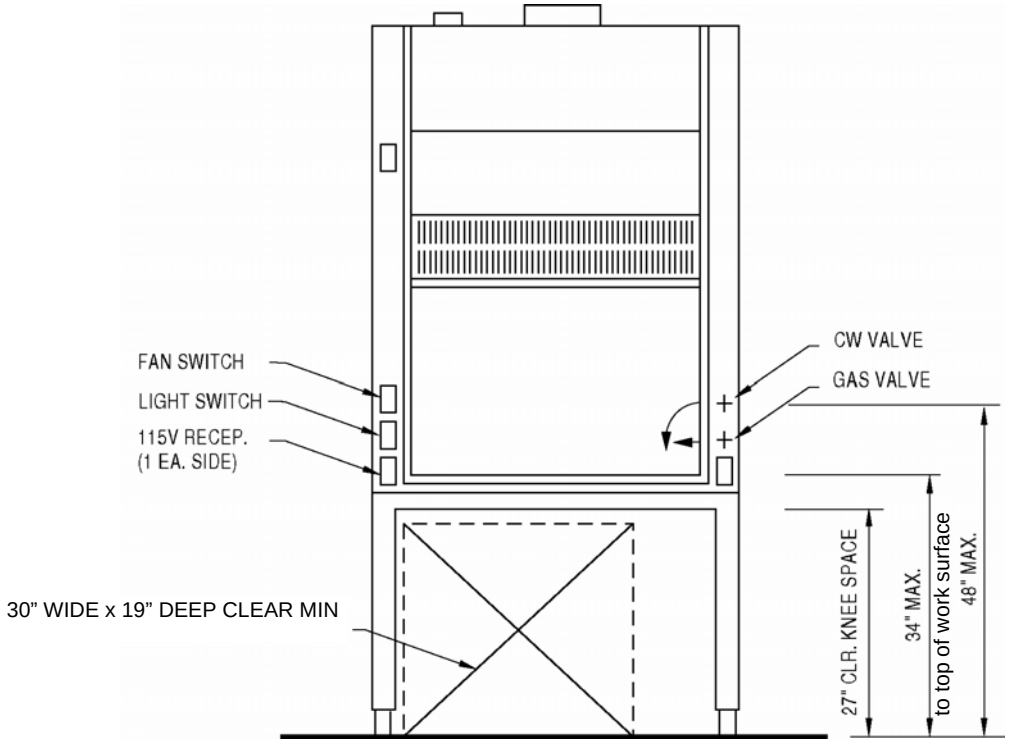

© 2006 DSA/OUD

21	Project designer (PD) shall address the following marked or circled items, and any additional plan review comments on drawings and specifications before scheduling a back check appointment for access compliance (AC). Any questions or points of disagreement must be resolved prior to back check by fax to plan reviewer (PR).	Justification / Reference or Code Citation	Headings / Comments / Notes & Examples
	Check List 21. INSTITUTIONAL USE AREAS		
21.1	For additional scoping requirements and exceptions see also applicable **DSA/AC Checklist 1.**		
21.2	**For the purpose of Access Compliance review only:** Regardless of occupant load or classification, the requirements of CBC 1109B are not limited to Group I facilities or portions of facilities but do also apply to any facility or portion of a facility which is used, either full-time or part-time, or can be characterized as an institutional use area.		
21.3	All skilled nursing, long-term care, intermediate care, bed and care, nursing homes, hospitals, clinics, trauma centers, psychiatric, detoxification, rehabilitation, and similar facilities must be made accessible.	CBC 1109B.1 & ADA Stds 6.1	Group I occupancies - General Medical care facilities - General
	EXCEPTION:		
	In existing buildings where DSA determines that compliance would create an unreasonable hardship, an exception may be granted when equivalent facilitation is provided. Equivalent facilitation in alterations or additions must provide for either of the following:	CBC 1109B.1	Group I occupancies - General
	a. When patient bedrooms are being added or altered as part of a planned renovation of an entire wing, a department, or other discrete area of an existing medical facility, a percentage of the patient bedrooms that are being added or altered must be made accessible. The percentage of accessible rooms provided must be consistent with the percentage of rooms required to be accessible by the applicable requirements of CBC 1109B.3 until the number of accessible patient bedrooms in the facility equals the overall number that would be required if the facility were newly constructed. Where toilet/bathrooms are part of patient bedrooms that are added or altered and required to be accessible, each such patient toilet/bathroom must be made accessible.	ADA Stds 6.1(4)(a)	Alterations to patient bedrooms
	b. When patient bedrooms are being added or altered individually, and not as part of an alteration of the entire area, the altered patient bedrooms must be made accessible unless either a) the number of accessible rooms provided in the department or area containing the altered patient bedroom equals the number of accessible patient bedrooms that would be required if the percentage requirements of 1109B.3 were applied to that department or area, or b) the number of accessible patient bedrooms in the facility equals the overall number that would be required if the facility were newly constructed. Where toilet/bathrooms are part of patient bedrooms that are added or altered and required to be accessible, each such toilet/bathroom must be made accessible.	ADA Stds 6.1(4)(b)	Alterations to patient bedrooms
21.4	At outpatient units or facilities providing medical care or services to persons with mobility impairments 10% of the total number of parking spaces must be accessible.	CBC 1129B.3 #1	Accessible parking required – Medical care outpatient facilities - Outpatient units and facilities

© 2006 DSA/OUD

21	Project designer (PD) shall address the following marked or circled items, and any additional plan review comments on drawings and specifications before scheduling a back check appointment for access compliance (AC). Any questions or points of disagreement must be resolved prior to back check by fax to plan reviewer (PR).	Justification / Reference or Code Citation	Headings / Comments / Notes & Examples
	Check List 21. INSTITUTIONAL USE AREAS		
21.5	At facilities that specialize in the treatment of persons with mobility impairments 20% of the total number of parking spaces must be accessible.	CBC 1129B.3 #2	Units and facilities that specialize in treatment or services for persons with mobility impairments
21.6	One in every eight accessible parking spaces must be van-accessible.	CBC 1129B.4 #2	Parking space size - Van space(s)
21.7	Provide and indicate at least one accessible entrance that is protected from the weather by a canopy or roof, and which incorporates an accessible passenger loading zone. EXCEPTION: Clinics and other medical facilities that are not intended for patient stays of 24 hours or more and that are located above the first floor.	CBC 1109B.2	Entrance
21.8	Provide enlarged plan in 1/4" scale representing the actual layout of the accessible passenger loading zone, including associated entrances, sidewalks and curb ramps. Provide and indicate:	CBSC Part 1 4-317(b)	Plans
	1. 5' x 20' access aisle adjacent and parallel to the vehicle pull–up space.	CBC 1109B.2 & CBC 1131B.2	Entrance Passenger loading zone
	2. Access aisle and vehicle pull–up space must be level (2% max. slope in any direction).	CBC 1109B.2	Entrance
	3. A curb ramp, if there is a curb between the access aisle and the vehicle pull–up space, or if there is a curb between the access aisle and the accessible route of travel.	CBC 1109B.2	Entrance
	4. Vertical clearance of 114" min at passenger loading zones and one vehicle access route to such zones (from site entrances and exits).	CBC 1109B.2	Entrance
	5. Design of identifying signage (including ISA).	ADA Stds 4.1.2(7)(b)	Building signage
	6. Indicate outline of canopy or roof on plan.	CBSC Part 1 4-317(b)	Plans
	7. Bus stop pads and shelters (as applicable).	CBC 1131B.4	Bus stop pads and shelters
21.9	All exterior and interior public use and common use areas, such as TV lounges, waiting rooms, offices, conference rooms, etc., must be made accessible.	CBC 1109B.1	Accessibility for group I Occupancies – General
21.10	In long-term care facilities (including skilled nursing, intermediate care, and bed & care, and nursing homes) provide and indicate a minimum of 50% of patient bedrooms and toilet facilities to be accessible.	CBC 1109B.3 #1	Patient bedrooms and toilet rooms
21.11	In general-purpose hospitals, psychiatric and detoxification facilities provide and indicate a minimum of 10% of patient bedrooms and toilet facilities to be accessible.	CBC 1109B.3 #2	Patient bedrooms and toilet facilities
21.12	In hospitals and rehabilitation facilities that specialize in treating conditions that affect mobility, or units within either that specialize in treating conditions that affect mobility, provide and	CBC 1109B.3 #3	Patient bedrooms and toilet facilities

© 2006 DSA/OUD

	Project designer (PD) shall address the following marked or circled items, and any additional plan review comments on drawings and specifications before scheduling a back check appointment for access compliance (AC). Any questions or points of disagreement must be resolved prior to back check by fax to plan reviewer (PR).	Justification / Reference or Code Citation	Headings / Comments / Notes & Examples
	Check List 21. INSTITUTIONAL USE AREAS		
	indicate that all patient bedrooms and toilet facilities shall be accessible.		
21.13	In buildings that house offices and suites of physicians, dentists, etc., all such offices or suites, and their sanitary facilities, must be made accessible.	CBC 1109B.8	Offices and suites

© 2006 DSA/OUD

22	Project designer (PD) shall address the following marked or circled items, and any additional plan review comments on drawings and specifications before scheduling a back check appointment for access compliance (AC). Any questions or points of disagreement must be resolved prior to back check by fax to plan reviewer (PR).	Justification / Reference or Code Citation	Headings / Comments / Notes / & Examples
	Check List 22. RESIDENTIAL USE AREAS		
22.1	Buildings and complexes containing publicly funded dwelling units shall be accessible as required by Chapter 11A, Housing Accessibility.	CBC 1111B.5.1	Buildings and complexes containing publicly funded dwelling units - General
22.2	Covered multifamily dwellings include one or more publicly funded dwelling units.	CBC 1111B.5.1	General
22.3	Alterations to publicly funded dwelling units must comply with Division IV of Chapter 11B, including the path of travel requirements.	CBC 1111B.5.1 CBC 1134B	General Accessibility for existing buildings

© 2006 DSA/OUD

23	Project designer (PD) shall address the following marked or circled items, and any additional plan review comments on drawings and specifications before scheduling a back check appointment for access compliance (AC). Any questions or points of disagreement must be resolved prior to back check by fax to plan reviewer (PR).	Justification / Reference or Code Citation	Headings / Comments / Notes & Examples
	Check List 23. MISCELLANEOUS AND OTHER USE AREAS		
23.1	For additional scoping requirements and exceptions see also applicable **DSA/AC Checklists 1 through 24.**		
FACTORY AND WAREHOUSE USE AREAS			
23.2	For the purpose of Access Compliance review only: Regardless of occupancy load or classification, the requirements of CBC 1107B are not limited to Group F facilities or portions of facilities but do also apply to any facility or portion of facility which is used, either full-time or part time, or can be characterized as factory or warehouse use area.	CBC 1107B	Factories and warehouses
23.3	All levels of multi-story factories and warehouses must be made accessible.	CBC 1107B & CBC 1103B.1	Factories and warehouses Building accessibility - General
	EXCEPTIONS:		
	a. In alterations when DSA determines that compliance would create an unreasonable hardship, and when equivalent facilitation is provided.		
	b. In non-occupiable spaces accessed only by ladders, catwalks, crawl spaces, very narrow passageways, or freight (non-passenger) elevators, and frequented only by service personnel for maintenance, repair, or occasional monitoring of equipment; such spaces may include, but are not limited to, elevator pits, elevator penthouses, piping or equipment catwalks, and machinery rooms.	CBC 1103B.1 - Exception 2	Building accessibility – General
	c. To levels in private facilities that are less than three stories or that have less than 3000 square feet per story.	CBC 1103B.1 - Exception 3.1	Building accessibility – General
23.4	Factories must be made accessible as follows:		
	1. All major or principal floor areas must be made accessible.	CBC 1107B.1 #1	Factories
	2. All office areas must be made accessible.	CBC 1107B.1 #2	Factories
	3. All sanitary facilities serving these areas must be made accessible.	CBC 1107B.1 #3	Factories
23.5	Warehouses must be made accessible as follows:		
	1. All warehousing areas which are located on the floor nearest grade and those areas on other floors that are otherwise provided with access by level entry, ramp or elevator must be made accessible.	CBC 1107B.2 #1	Warehouses
	2. All office areas must be made accessible.	CBC 1107B.2 #2	Warehouses
	3. All sanitary facilities serving these areas must be made accessible.	CBC 1107B.2 #3	Warehouses

23	Project designer (PD) shall address the following marked or circled items, and any additional plan review comments on drawings and specifications before scheduling a back check appointment for access compliance (AC). Any questions or points of disagreement must be resolved prior to back check by fax to plan reviewer (PR).	Justification / Reference or Code Citation	Headings / Comments / Notes & Examples
	Check List 23. MISCELLANEOUS AND OTHER USE AREAS		
	HAZARDOUS USE AREAS	CBC 1108B	Accessibility for Group H Occupancies
23.6	For the purpose of Access Compliance review only: Regardless of occupancy load or classification, the requirements of CBC 1108B are not limited to Group H facilities or portions of facilities but do also apply to any facility or portion of facility which is used, either full-time or part time, or can be characterized as hazardous use area.	CBC 1108B.1	General
23.7	Hazardous use areas that are used by the public, as customers, clients, or visitors, or are potential places of employment, must be made accessible. EXCEPTIONS: a. In alterations when DSA determines that compliance would create an unreasonable hardship, and when equivalent facilitation is provided. b. In existing buildings where DSA determines that, due to legal or physical constraints, compliance with accessibility standards or equivalent facilitation would create an unreasonable hardship.	CBC 1108B.6	Accessible facilities <u>NOTE:</u> Jurisdictional findings and determinations for exception (b) are subject to an internal DSA appeals process.
23.8	Provide and indicate accessible toilet and bathing facilities.	CBC 1108B.2	Accessible sanitation facilities
23.9	Provide and indicate an accessible route of travel, including entrances, stairs, ramps, doors, turnstiles, corridors, walks, and sidewalks.	CBC 1108B.3	Accessible routes
23.10	All floor and levels must be made accessible.	CBC 1108B.4	Accessible floors and levels
23.11	Provide and indicate a 36” min wide accessible route of travel and doors with 32” min clearance to all employee work areas.	CBC 1108B.5	Employee work areas
	STORAGE AND UTILITY USE AREAS		
23.12	Storage and utility use areas that are used by the public as customers, clients, visitors or which are potential places of employment must be made accessible. EXCEPTION: In alterations when DSA determines that compliance would create an unreasonable hardship, and when equivalent facilitation is provided.	CBC 1114B & CBC 101.17.11 #2	Facility accessibility Access compliance, Division of the State Architect - Application

© 2006 DSA/OUD

23	Project designer (PD) shall address the following marked or circled items, and any additional plan review comments on drawings and specifications before scheduling a back check appointment for access compliance (AC). Any questions or points of disagreement must be resolved prior to back check by fax to plan reviewer (PR).	Justification / Reference or Code Citation	Headings / Comments / Notes & Examples
	Check List 23. MISCELLANEOUS AND OTHER USE AREAS		
23.13	Provide and indicate at least one of each type of storage facility to be accessible.	CBC 1125B.1	Storage - General
23.14	Provide and indicate accessible route of travel to accessible storage units.	CBC 1114B.1.2	Accessible route of travel
23.15	Provide and indicate accessible opening hardware at accessible storage units.	CBC 1125B.4	Storage - Hardware
23.16	Provide and indicate accessible toilet and bathing facilities.	CBC 1115B.1	Bathing and toilet facilities – General
23.17	Provide and indicate a 36” min wide accessible route of travel and doors with 32” min clearance to all employee work areas.	CBC 1123B.2	Work stations
23.18	Public tour areas, to the extent that such public tours are conducted through or about a utility facility, or where the public is permitted to walk in such areas, must provide accessibility in those portions of the facility and grounds where this occurs.	CBC 1105B.3.4 #2	Public utility facilities
OUTDOOR USE AREAS		CBC 1132B	Outdoor occupancies
23.19	For the purpose of Access Compliance review only: Regardless of occupancy load or classification, the requirements of CBC 1132B are not limited to outdoor use areas or facilities but do also apply to any area, facility, or portion of facility which is used, either full-time or part time, or can be characterized as outdoor use area.	CBC 1132B.1	General
23.20	Outdoor use areas, including naturally occurring public accommodations, must be made accessible.	CBC 1132B.1	General
23.21	Parks and Recreational areas and facilities must be made accessible. EXCEPTIONS: a. In alterations when DSA determines that compliance would create an unreasonable hardship, and when equivalent facilitation is provided. b. Where DSA finds that, in specific areas, the natural environment would be physically damaged by compliance; such areas shall be subject to these regulations only to the extent that such material damage would not occur. c. Automobile access shall not be provided or routes of travel shall not be made accessible when DSA determines that compliance with these regulations would create an unreasonable hardship.	CBC 1132B.2	Parks and recreational areas
23.22	Provide and indicate a minimum of 3% but never less than two (2) accessible campsites.	CBC 1132B.2 #1	Campsites
23.23	Accessible campsite must be level and provide a firm and stable surface.	CBC 1124B.1	Ground and floor surfaces - General

	Project designer (PD) shall address the following marked or circled items, and any additional plan review comments on drawings and specifications before scheduling a back check appointment for access compliance (AC). Any questions or points of disagreement must be resolved prior to back check by fax to plan reviewer (PR).	Justification / Reference or Code Citation	Headings / Comments / Notes & Examples
	Check List 23. MISCELLANEOUS AND OTHER USE AREAS		
23.24	Provide and indicate accessible route of travel from accessible campsites to sanitary facilities.	CBC 1132B.2 #1	Campsites
23.25	If permanent sanitary facilities are provided on the site, these must be made accessible to persons using wheelchair.	CBC 1132B.2 #1 & 3	Campsites & Sanitary facilities
23.26	All beaches, picnic areas, day use areas, vista points and similar areas must be made accessible.	CBC 1132B.2 #2	Beaches, picnic areas
23.27	Boat docks, fishing piers, etc. must be made accessible.	CBC 1132B.2 #4	Boat docks
23.28	Trails, paths and nature walk areas, or portions of these, shall permit at least partial use by wheelchair occupants. Hard surface paths or walks shall be provided to serve all buildings and other functional areas.	CBC 1132B.2 #6	Trails and paths
23.29	Provide and indicate running slopes or elevation points and cross slopes.	CBSC Part 1 4-317(b)	Plans
23.30	Indicate and specify accessible trail surface material.	CBSC Part 1 4-317(b)	Plans
23.31	Nature trails and other similar educational or informational areas must be accessible to the blind with rope guidelines, raised Arabic numerals and symbols, informational signs and related guide and/or assistance devices.	CBC 1132B.2 #7	Nature trails NOTE: For museums, orientation buildings, visitor centers, office buildings, retail stores, restaurants, etc., and sanitary facilities serving these uses, see Sections 1104B through 1111B, 1115B, and sections listed in Section 1114B.1.1.
23.32	Highway rest areas and similar facilities must be made accessible, including:	CBC 1132B.3	Highway rest areas
	1. An accessible sanitary facility for each sex.	CBC 1132B.3.1 #1	Permanent facilities
	2. At least one accessible picnic table and one additional table for each 20 tables, or fraction thereof provided.	CBC 1132B.3.1 #2	Permanent facilities
	3. Accessible Information and display areas.	CBC 1132B.3.1 #3	Permanent facilities
	4. Hi-low drinking fountains.	CBC 1132B.3.1 #4	Permanent facilities
	5. At least one van-accessible parking space.	CBC 1132B.3.1 #5	Permanent facilities
	6. Curb ramps conforming to CBC 1127B.5 must be provided at pedestrian ways where appropriate.	CBC 1132B.3.1 #6	Permanent facilities

© 2006 DSA/OUD

Project designer (PD) shall address the following marked or circled items, and any additional plan review comments on drawings and specifications before scheduling a back check appointment for access compliance (AC). Any questions or points of disagreement must be resolved prior to back check by fax to plan reviewer (PR).	Justification / Reference or Code Citation	Headings / Comments / Notes & Examples

Check List 23. MISCELLANEOUS AND OTHER USE AREAS

SWIMMING POOLS			
23.33	Swimming pool deck areas must be accessible.	CBC 1104B.4.3 #4	Participation areas – Swimming pool deck areas
23.34	Swimming pools must provide a mechanism to assist persons with disabilities in gaining entry into the pool and in exiting form the pool.	CBC 1104B.4.3 #4	Participation areas – Swimming pools
23.35	Provide and indicate swimming pool lift that complies with the following requirements:	CBC 1104B.4.3 #4	Participation areas – Swimming pool deck areas
	1. Seat must be rigid.	CBC 1104B.4.3 #4.1.1	Swimming pool deck areas
	2. Seat must be between 17” and 19” above the deck of the pool, including any cushioned surface.	CBC 1104B.4.3 #4.1.2	Swimming pool deck areas
	3. Seat must have two armrests. The armrest on the side of the seat by which access is gained must be removeable or fold clear of the seat.	CBC 1104B.4.3 #4.1.3	Swimming pool deck areas
	4. Seat must have a back support that is at least 12” tall.	CBC 1104B.4.3 #4.1.4	Swimming pool deck areas
	5. Seat must have an occupant restraint for use by the occupant of the seat. Restraint must meet the standards for operable controls per CBC Section 1117B.6 #4 – be operable with one hand and not require tight grasping, pinching, or twisting of the wrist; and not require a force greater than 5 lbf (22.2 N) to activate the controls.	CBC 1104B.4.3 #4.1.5	Swimming pool deck areas
	6. Lift must be capable of unassisted operation from both the deck and water levels.	CBC 1104B.4.3 #4.2	Swimming pool deck areas
	7. Lift must be stable and not permit unintended movement when a person is getting into or out of the seat.	CBC 1104B.4.3 #4.3	Swimming pool deck areas
	8. Lift must be designed to have a live-load capacity of not less than 300 lbs.	CBC 1104B.4.3 #4.4	Swimming pool deck areas
	9. Lift must be noted to be positioned so that if the pool has water of different depths, it will place the operator into water that is at least three feet deep.	CBC 1104B.4.3 #4.5	Swimming pool deck areas
	10. Lift must be able to lower the operator at least 18” below the surface of the water.	CBC 1104B.4.3 #4.6	Swimming pool deck areas

© 2006 DSA/OUD

24	Project designer (PD) shall address the following marked or circled items, and any additional plan review comments on drawings and specifications before scheduling a back check appointment for access compliance (AC). Any questions or points of disagreement must be resolved prior to back check by fax to plan reviewer (PR).	Justification / Reference or Code Citation	Headings / Comments / Notes & Examples
	Check List 24. QUALIFIED HISTORICAL BUILDINGS		
24.1	Provide documentation that verifies the project is a qualified historical building or property and submit along with plans for review.	CHBC 8-602.2 #3	Alternative provisions
24.2	This checklist applies to every qualified historical building, or property, that is required to provide access to people with disabilities.	CHBC, Chapter 6	Alternative accessibility provisions
24.3	Design and construction must preserve the integrity of qualified historical buildings and properties, while providing access to, and use by people with disabilities. Every function or accommodation available to the general public must be accessible either directly or by alternatives as indicated below.	CHBC 8-601.2	Intent
24.4	Regular code for access for persons with disabilities shall be applied to qualified historical buildings or properties, unless strict compliance with the regular code will threaten or destroy the historical significance, or character-defining features of the building or property.	CHBC 8-602.1 CHBC 8-219 - R	Regular code Definitions – Regular code <u>DEFINITION:</u> REGULAR CODE: The adopted regulations that govern the design and construction or alteration of non-historical buildings, structures and properties within the jurisdiction of the enforcing agency.
24.5	If the historical significance or character-defining features are threatened, alternative provisions for access may be applied pursuant to this Checklist, provided the following conditions are met:	CHBC 8-602.2	Alternative provisions
	1. Such alternative provisions shall be applied only on an item-by-item or a case-by-case basis.	CHBC 8-602.2 #1	Alternative provisions
	2. The alternative provisions are applied according to the priorities outlined in the CHBC (Part 8 of Title 24) Section 8-603, whereby the alternative providing the greatest accessibility is listed first.	CHBC 8-602.2 #2	Alternative provisions
	3. Documentation is provided stating the reasons for the application of the alternative provisions. Such documentation shall be maintained as a part of the public record.	CHBC 8-602.2 #3	Alternative provisions
	4. If it is found that the application of the preferred alternatives listed in CBSC Section 8-603 threatens the historical significance or character-defining features of the build or property, the provisions of CHBC Sections 8-604 and 8-605 may be applied.	CHBC 8-602.2 #4	Alternative provisions
	5. A signature of approval from the applicable enforcement agency shall accompany any alternatives, equal facilitation designs, or exceptions agreed upon.	CHBC 8-602.2 #3	Alternative provisions

© 2006 DSA/OUD

24	Project designer (PD) shall address the following marked or circled items, and any additional plan review comments on drawings and specifications before scheduling a back check appointment for access compliance (AC). Any questions or points of disagreement must be resolved prior to back check by fax to plan reviewer (PR).	Justification / Reference or Code Citation	Headings / Comments / Notes & Examples
	Check List 24. QUALIFIED HISTORICAL BUILDINGS		
24.6	The alternatives below each category are listed in order of priority. These alternatives apply only to the specific building standards listed below. All other related standards of regular code are not affected nor exempted.	CHBC 8-603	Preferred alternatives
	1. Entry The entrance alternatives below do not allow exceptions for the requirement of level landings in front of doors, except as provided in CBSC Section 8-603.3 (Item 3 below). Alternatives listed in order of priority are: A. Access to any entrance used by the general public and no further than 200' from the primary entrance. B. Access at any entrance not used by the general public, but open and unlocked with directional signs at the primary entrance and as close as possible to, but no further than 200' from, the primary entrance.	CHBC 8-603.1 #1	Preferred alternatives – Entry
	2. Doors Alternatives for doors listed in order of priority are:	CHBC 8-603.2	Preferred alternatives – Doors
	A. Single-leaf door that provides a 30" min clear opening.	CHBC 8-603.2 #1	Preferred alternatives – Doors
	B. Single-leaf door which provides a 29-1/2"min clear opening.	CHBC 8-603.2 #2	Preferred alternatives – Doors
	C. Double door, one leaf of which provides a 29-1/2" min clear opening.	CHBC 8-603.2 #3	Preferred alternatives – Doors
	D. Double doors operable with a power-assist device to provide a 29-1/2" min clear opening when both doors are in the open position.	CHBC 8-603.2 #4	Preferred alternatives – Doors
	3. Power-assisted Doors A power-assisted door or doors may be considered an equivalent alternative to level landings, strike side clearance, and door-opening forces required by the regular code.	CHBC 8-603.3	Preferred alternatives – Power-assisted doors
	4. Toilet Rooms In lieu of separate-gender toilet facilities as required in the regular code, an accessible unisex toilet facility may be designated.	CHBC 8-603.4	Preferred alternatives – Toilet rooms
	5. Exterior and Interior Ramps and Lifts Alternatives for ramps and lifts listed in order of priority are:	CHBC 8-603.5	Preferred alternatives – Exterior and interior ramps and lifts
	A. A lift or a ramp of greater than standard slope, but no greater than 1:10 for horizontal distances, cannot exceed 12 feet. Signs shall be posted at upper and lower levels to indicate steepness of the slope.	CHBC 8-603.5 #1	Preferred alternatives – Exterior and interior ramps and lifts
	B. Access by ramps of 1:6 slope for horizontal distance, not to exceed 13". Signs shall be posted at upper and lower levels to indicate steepness of the slope.	CHBC 8-603.5 #2	Preferred alternatives – Exterior and interior ramps and lifts
	C. Access provided by experiences, services, functions, materials and resources through methods including, but not limited to, maps, plans, videos, virtual reality, and related equipment at accessible levels. This alternative shall be documented as required in CBSC Section 8-605.	CHBC 8-603.5 #3	Preferred alternatives – Exterior and interior ramps and lifts

© 2006 DSA/OUD

Project designer (PD) shall address the following marked or circled items, and any additional plan review comments on drawings and specifications before scheduling a back check appointment for access compliance (AC). Any questions or points of disagreement must be resolved prior to back check by fax to plan reviewer (PR).	Justification / Reference or Code Citation	Headings / Comments / Notes & Examples
Check List 24. QUALIFIED HISTORICAL BUILDINGS		
6. Equivalent Facilitation Use of other designs and technologies, or deviation from particular technical and scoping requirements, are permitted if the application of the alternative provisions contained in CBSC Section 8-603 would threaten or destroy the historical significance or character-defining features of the building or site, or cause unreasonable hardship. Alternatives to CBSC Section 8-604 are permitted only where the following conditions are met:	CHBC 8-604	Equivalent facilitation
A. Such alternatives shall be applied only on an item-by-item or a case-by-case basis.	CHBC 8-604 #1	Equivalent facilitation
B. The alternative design and/or technologies used will provide substantially equivalent or greater accessibility to, and usability of, the facility.	CHBC 8-604 #2	Equivalent facilitation
C. The official charged with the enforcement of the standards, shall document the reasons for the application of the alternative design and/or technologies, and their effect on the historical significance or character-defining features. Such documentation shall be in accordance with CBSC Section 8-602.2, Item 3, and shall include the opinions and comments of state or local accessibility officials, and the opinions and comments of local organizations representing persons with disabilities. Such documentation shall be recorded and entered into the permanent file of the enforcing agency.	CHBC 8-604 #3	Equivalent facilitation
7. Exceptions If the historical significance or character-defining features would be threatened or destroyed by the application of alternative access standards as provided by this chapter, and no equivalent facilitation as provided in CBSC Section 8-604 is feasible, an exception from literal requirements for full and equal access or any alternative provisions may be provided only if the following conditions are met	CHBC 8-605	Exceptions
A. Such exception is considered only on an item-by-item or case-by-case basis.	CHBC 8-605 #1	Exceptions
B. Interpretive exhibits and/or equal services of the exempted significant historical aspects are provided for the public in a location fully accessible to, and usable by persons with disabilities, including persons with hearing and sight impairment.	CHBC 8-605 #2	Exceptions
C. Services are provided in an accessible location equal to those provided in the excepted location.	CHBC 8-605 #3	Exceptions
D. The official charged with the enforcement of the standards shall document the reasons for the application of the alternative design and/or technologies and their effect on the historical significance or character-defining features. Such documentation shall be in accordance with CBSC Section 8-602.2, Item 3, and shall include the opinions and comments of state or local accessibility officials, and the opinions and comments of local organizations representing persons with disabilities. Such documentation shall be recorded and entered into the permanent file of the enforcing agency	CHBC 8-605 #4	Exceptions

© 2006 DSA/OUD

25	Project designer (PD) shall address the following marked or circled items, and any additional plan review comments on drawings and specifications before scheduling a back check appointment for access compliance (AC). Any questions or points of disagreement must be resolved prior to back check by fax to plan reviewer (PR).	Justification / Reference or Code Citation	Headings / Comments / Notes & Examples
	Check List 25. SPECIFICATIONS		
25.1	For additional scoping requirements see also applicable **Checklists 1 through 24.**		
DIVISION 2, SITE WORK			
25.2	Specify concrete paving and concrete finishes along accessible routes of travel to be at least as slip-resistant as that described as a medium salted finish for slopes of less than 6%, and slip-resistant at slopes of 6% or greater	CBC 1133B.7.1	Continuous surface
25.3	Specify all gates, including ticket gates, to meet all applicable specifications for doors. Coordinate and specify height and type of hardware with door requirements.	CBC 1133B.1.1.1.4	Gates
25.4	Specify bottom 10” of gates to have a smooth uninterrupted surface.	CBC 1133B.2.6	Smooth surface
DIVISION 8, DOORS & STOREFRONTS			
25.5	Specify thresholds in the accessible route of travel.	CBC 1133B.2.4.1	Thresholds
25.6	Specify closer-effort to be 5 lbf at exterior doors and interior doors.	CBC 1133B.2.5	Closer-effort to operate doors
25.7	Delete note that states that fire doors or rated doors can have up to 15 lbs operating effort, or provide the following note: “The Authority having Jurisdiction, may increase the maximum effort to operate fire doors to achieve positive latching, but not to exceed 15 lbs max.”	CBC 1133B.2.5	Closer-effort to operate doors
25.8	Specify door closer and closer delay time.	CBC 1133B.2.5.1	Door closer
25.9	Where flush bolts occur in the accessible route of travel, specify accessible flush bolt (automatic).	CBC 1133B.2.5.2	Door hardware
25.10	Specify hand-activated hardware between 30” to 44” AFF; lever-type hardware, panic bars, push-pull activating; lever handle for thumb turn dead bolt.	CBC 1133B.2.5.2	Door hardware
25.11	Provide cut sheets for all door operating hardware at back check appointment.	--	
25.12	Provide cut sheets for darkroom doors.	--	
DIVISION 9, FINISHES			
25.13	Specify tile flooring to be slip-resistant.	CBC 1124B.1	Ground & floor surfaces –
25.14	Specify resilient flooring to be slip-resistant.	CBC 1124B.1	Ground & floor surfaces
25.15	Specify carpet to be securely attached to floor, firm or no pad, 1/2" max pile height, and level loop or cut pile.	CBC 1124B.3	Carpet
25.16	Specify anchorage at recessed doormats.	CBC 1133B.1.1.1.3	Recessed doormats

© 2006 DSA/OUD

25	Project designer (PD) shall address the following marked or circled items, and any additional plan review comments on drawings and specifications before scheduling a back check appointment for access compliance (AC). Any questions or points of disagreement must be resolved prior to back check by fax to plan reviewer (PR).	Justification / Reference or Code Citation	Headings / Comments / Notes & Examples
	Check List 25. SPECIFICATIONS		
	DIVISION 10, SPECIALTIES		
25.17	Specify signage to be in compliance with 1114B, 1115B.5 and 1117B.5. Also see Checklist 17.	--	
25.18	Specify signage font, size, color and color of background.	CBC 1117B.5	Signs & identification
25.19	Specify toilet compartment doors to have automatic-closing device, U-shaped handles below latch, and flip-over or sliding latch.	CBC 1115B.7.1 #4	Compartment doors
25.20	Specify coat hook to be installed at 48” max AFF.	CBC 1118B.5	Forward reach
25.21	Specify toilet tissue dispensers to be continuous flow type.	CBC 1115B.9.3	Toilet tissue dispensers
25.22	Specify grab bar length and diameter.	CBC 1115B.8	Grab bars
25.23	Provide cut sheets of all toilet room accessories at back check appointment.	--	
	DIVISION 11, EQUIPMENT		
25.24	Specify accessible fume hood, eyewash, deluge shower, other specialized equipment, etc.	--	
25.25	Provide cut sheets for specialized equipment used at back check appointment.	--	
25.26	Specify clear knee space at specialized equipment and/or accessible reach ranges.	CBC 1118B.4, CBC 1118B.5 & CBC 1118B.6	Clear floor or ground space Forward reach Side reach
25.27	Specify food service aisle to be 36” min wide and tray slides to be mounted at 34” max AFF.	CBC 1104B.5 #5	Food service aisles
25.28	Specify walk-in coolers and freezers to have accessible entry and exit door hardware, and level maneuvering clearances at the exterior side.	CBC 1133B.2.4.2 CBC 1133B.2.5.2	Maneuvering clearances at doors Hand-activated door opening hardware
	DIVISION 12, FURNISHINGS		
25.29	Specify U-pulls at cabinets/casework for accessible storage.	CBC 1125B.4	Hardware
25.30	Specify access signage at bleachers.	CBC 1104B.3.4 #1	Wheelchair spaces
25.31	Provide code references for accessible seating for persons using wheelchairs and companion.	--	
25.32	Specify 1% or at least one accessible locker, including shelf and coat-hook height and signage.	CBC 1115B.6.4	Lockers

© 2006 DSA/OUD

Project designer (PD) shall address the following marked or circled items, and any additional plan review comments on drawings and specifications before scheduling a back check appointment for access compliance (AC). Any questions or points of disagreement must be resolved prior to back check by fax to plan reviewer (PR).

Check List 25. SPECIFICATIONS

		Justification / Reference or Code Citation	Headings / Comments / Notes & Examples
DIVISION 14, CONVEYING SYSTEMS			
25.33	Refer to CBSC Part 2, Sections 1116B.1 and 3003 for elevators.	--	
25.34	Refer to CBSC Part 7, Section 7-3094 for platform lifts.	--	
25.35	Specify lift platform safety sensors to prevent downward travel if obstruction is encountered.	CBSC Part 7, Section 7-3094	Vertical and inclined platform (wheelchair) lifts
25.36	Specify back-up battery when lift used for platform is without direct accessible egress.	CBC 1116B.3	Special access (wheelchair) lifts
25.37	Specify all elevator/lift signage.	CBC 1117B.5	Signs & identification
DIVISION 15, MECHANICAL/PLUMBING			
25.38	Coordinate height of accessible fixtures with those indicated in construction drawings	--	
25.39	Provide cut sheets for water closet, urinal, lavatories, drinking fountain, showers, etc	--	
25.40	Specify lever-operated faucets. Push-type and electronically controlled mechanisms are acceptable (controls to be operable with one hand; no tight grasping, pinching or twisting of the wrist).	CBC 1115B.2.1.2.1	Faucet controls
25.41	Specify force to activate controls to be no greater than 5 lbf.	CBC 1115B.2.1.2.1	Faucet controls
25.42	Specify faucet to remain open for at least 10 seconds when self-closing valves are used.	CBC 1115B.2.1.2.1	Faucet controls
25.43	Specify insulation or cover for hot water and drainpipes under accessible sinks and lavs.	CBC 1115B.2.1.2.2	Hot water & drain pipes
25.44	Specify accessible sinks to be 6 1/2" max deep.	ADA Stds 4.24.4	Sinks-Depth
DIVISION 16, ELECTRICAL			
25.45	Specify permanently installed Assistive Listening System for assembly use areas with fixed seating.	CBC 1104B.2 #6	ALS – Portable systems
25.46	Specify portable Assistive Listening System for assembly use areas with non-fixed seating.	CBC 1104B.2 #6	ALS – Portable systems
25.47	Specify type of Assistive Listening System.	CBC 1104B.2 #2	ALS – Types
25.48	Specify number of receivers and number of signs.	CBC 1104B.2 #1 CBC 1104B.2 #4	ALS – Number required ALS – Signage

© 2006 DSA/OUD