STATE OF CALIFORNIA
DEPARTMENT OF GENERAL SERVICES - PROCUREMENT DIVISION

CONTRACT NOTIFICATION

***** MANDATORY *****

CONTRACT NUMBER: **1-06-62-31**

DESCRIPTION: **CALIFORNIA LAMP CONTRACT**

CONTRACTOR: **VARIOUS**

EFFECTIVE DATES: **3/ 1/2006** THROUGH **2/29/2008**

SUPERSEDES CONTRACT NO.: **1-03-62-31**

AREA: **STATEWIDE**

DISTRIBUTION: **C-62-31**

* TAX: Add appropriate sales and use tax.
Exempt from Federal Excise Tax.

*Food contracts are tax exempt.

Rita Hamilton

RITA HAMILTON, Deputy Director

Use of this agreement by all agencies is mandatory with monetary exceptions stated herein or contained in State Administrative Manual.

To obtain assistance or report non-compliance by supplier, or for any suggestions or recommendations write:

Department of General Services, Procurement Division, P.O. Box 989054, W. Sacramento, CA 95798-9054, or call: Contract Administrator, **WILLIAM RODRIGUEZ** **916-375-4462**

Contract (Mandatory): 1-06-62-31

SUPPLIER ID:	**178980**	
NAME:	**RAYVERN LIGHTING SUPPLY CO INC**	
ADDRESS:	**7901 SOMERSET BLVD STE C** **PARAMOUNT, CA 90723**	
CONTACT:	**562-634-7020**	**FRANK PULIAFICO JR**
FAX NUMBER:	**562-634-7697**	
TERMS OF PAYMENT:	**NET 45 DAYS**	
FOB:	**Destination**	
MINIMUM ORDER:	**AS SPECIFIED**	

SUPPLIER ID:	**186880**	
NAME:	**WEST-LITE SUPPLY CO INC**	
ADDRESS:	**12951 166TH STREET** **CERRITOS, CA 90703**	
CONTACT:	**562-802-0224**	**GARRY J HAVERLAND, X309**
FAX NUMBER:	**562-802-0154**	
TERMS OF PAYMENT:	**NET 45 DAYS**	
FOB:	**Destination**	
MINIMUM ORDER:	**AS SPECIFIED**	

SUPPLIER ID:	**771399**	
NAME:	**ALL-PHASE ELECTRIC SUPPLY/CED**	
ADDRESS:	**2101 EMPIRE AVE** **BURBANK, CA 91504-3429**	
CONTACT:	**800-537-6300**	**GLINDA SHIPLEY**
FAX NUMBER:	**800-989-9818**	
TERMS OF PAYMENT:	**2% - 21 DAYS**	
FOB:	**Destination**	
MINIMUM ORDER:	**AS SPECIFIED**	

SCOPE:

The State of California, Department of General Services, Procurement Division is promoting an Environmentally Preferable Purchasing program. This program will provide for the acquisition of goods and services that have a lesser or reduced effect on human health and the environment when compared with competing goods and services that serve the same purpose. The California Lamp Contract was developed with these priciples in mind. Specifically, this contract encourages the sale and purchase of higher efficiency, lower mercury fluorescent lamps.

This contract covers the estimated 2 year requirement of the State of California and participating local agencies for this Mandatory CALIFORNIA LAMP CONTRACT. Pricing shall be firm for two years. The State may elect to extend the contract for two additional years (on an annual basis).

NOTE: A local agency is any city, county, city and county, district or other local governmental body or corporation empowered to expend public funds (Public Contract Code 10298).

LAMP PRICES:

Prices for this contract include discounts offered.

Contract (Mandatory): 1-06-62-31

ORDERING PROCEDURE:

Delivery to State Agencies will be made upon receipt of a State Contract/Delegation order (Std. 65) and/or the State of California credit card (CAL-CARD) addressed to the appropriate contractor. State Agencies shall include on order: agency name, State billing code number, contract number, commodity code number, lamp ordering code, quantity, and price.

Delivery to local agencies (political subdivisions) will be made upon receipt of a purchase order appropriate to those agencies directed to the proper contractor. No advance authorization is required from DGS Procurement Division for use by local agencies. Any questions regarding an approprate local agency purchase order form may be directed to the DGS contract administrator. The State will bill local agencies a modest percentage on each order issued. For the current billing rate go to this website: www.ofs.dgs.ca.gov/Price+Book/P/Purchasing.htm under Contracts (IT Code 6040).

Agencies shall send purchase order copies to: DGS - Procurement Division
Attn: Data Entry Unit
PO Box 989052
West Sacramento, CA 95798-9052

MINIMUM ORDER:

All lamps shall be ordered in full cases only. Minimum dollar amount per order shall be $75.00. (EXCEPTION - Group 2B: CFL's, minimum dollar amount shall be $50.00.)

DELIVERY:

Delivery shall be completed in full within 20 calendar days of the receipt of order by the Contractor(s). Delivery shall be made to any State agency and any local agency within California (See ORDERING PROCEDURE).

CONTRACTOR(S) IS/ARE REQUESTED TO MAKE DELIVERIES IN LOS ANGELES COUNTY, ORANGE COUNTY, SAN BERNARDINO METROPOLITAN AREA, AND SAN DIEGO METROPOLITAN AREA DURING OFF-PEAK HOURS. OFF-PEAK HOURS ARE 10:00 AM TO 4:00 PM.

CONTRACTOR(S) MUST ACCEPT ORDERS BY FACSIMILE OR E-MAIL TRANSMISSION:

E-Mail Addresses: All-Phase Electric = dlauermann@all-phaseburbank.com
Rayvern Lighting = sales@rayvern.com
West-Lite Supply = salesnc@west-lite.com (Northern California)
salessc@west-lite.com (Southern California)

Facsimile Numbers: See Page 2 of this contract.

FLUORESCENT LAMP DISPOSAL/RECYCLING REQUIREMENT:

The Contractor(s) shall provide services for the disposal and recycling of fluorescent lamps being offered for each applicable category or group on this contract. This service shall be made available on a non-mandatory basis to any participating State and local agency under the California Lamp Contract.

The service shall include availability of containers for the safe return by a using agency of flurescent lamps to the contractor(s). The contractor(s) shall also assure the State that, once received, the lamps will be properly recycled and/or diposed of.

Contract (Mandatory): 1-06-62-31

STATE'S OBLIGATION TO PAY:

The State's obligation to pay is solely from funds appropriated for the acquisition of the products on this contract. If funds are not appropriated for future fiscal years, the contract dollar amount will be reduced accordingly. Receipt of a contract delegation order or purchase order under the contract is proof of availability of funds for that order.

CALIFORNIA LAMP CONTRACT (CLC) PRICE SCHEDULE REQUIREMENTS:

The California Lamp Contract (CLC) requires the creation of a custom, CLC Price Schedule identifying each of the products offered. Both hard copies and electronic (pdf. format) versions of the CLC Price Schedule shall be available "at no cost" to the State. The CLC Price Schedule requirements include T-8 ballasts provided for Group 2A. The CLC Price Schedule shall include a description/pricing of the services providing for the disposal and recycling of all "fluorescent lamps" being offered as required (See Fluorescent Lamp Disposal/Recycling Requirement). The contractor(s) shall provide an electronic copy of the applicable portion of the CLC Price Schedule on their website. The CLC Price Schedule is required to show the State's "net" (discount) prices.

CALIFORNIA LAMP CONTRACT (CLC) PRICE SCHEDULE CHANGES/PRICING:

(CLC) Price Schedule prices shall be firm for two years from the contract start date. The State shall receive full benefit of all Manufacturer's Price Schedule decreases effective on the date of the manufacturer's general public announcement. The contractor(s) shall have the responsibility to provide the State with a supplement to the (CLC) Price Schedule annotating the revised pricing.

SPECIFICATIONS:

As appropriate, all lamps shall comply with the following specifications:

For Category 1 - T-12 Fluorescent Lamps; State of California Bid Specification 6240-05BS-001, Fluorescent Lamps, dated November 2005 (3 pages).

For Category 2 - Groups 2A, 2B, & 2C; State of California Bid Specification 6240-05BS-001, Fluorescent Lamps, dated November 2005 (3 pages).

For Category 3 - Group (3F) High Pressure Sodium Lamps (ONLY); must meet the California DOT Specification for High Pressure Sodium Lamps, dated November 1996 (5 pages).

INVOICING REQUIREMENTS:

The contractor(s) must submit invoices as instructed on individual orders. Invoices shall include, agency name, State billing code number, order number, contract number, commodity code number, lamp ordering code, quantity, unit price and extensions. State sales and/or use tax is to be added to each invoice.

PRODUCT IDENTIFICATION/PACKAGING REQUIREMENTS:

All lamps furnished for this contract shall be permanently marked in a conspicuous manner so as to readily identify the manufacturer and product/code number. Exterior packaging is to show the contents and the order number. All packaging is to conform to the applicable freight classifications, Surface Transportation Board and/or Postal regulations, and is to be of a quality to assure final delivery without damage to the contents.

Contract (Mandatory): 1-06-62-31

USAGE REPORTS:

The contractor(s) must submit a detailed report every month to the Procurement Division, Contract Management. Sample Usage Reports form shall be provided by the State. The usage reports shall include the following information:

* State Billing Code Number
* Purchase/Delegation Order Number
* Order/Mode of Payment (phone, fax, Std. 65, State credit card {CAL-CARD})
* Order Date/Invoice Date
* Authorized Purchaser Name (State and local agencies) who made the purchase.
* Total Quantities per item number.
* Total Dollar amount ordered from the contract by the using agencies (State and local agencies) - (Invoice copies will not fulfill this requirement.)
* Complete product description including product code and lamp type.

SB/NVSA/DVBE Contractor/Subcontractor Usage Reports:

If applicable reports on the following Contractor(s) / Subcontractor(s) classifications:
1) California-certified small business enterprises
2) Non-profit Veteran Service agencies
3) California-certified Disabled Veteran Business Enterprises (DVBE)

These reports will be submitted monthly and include the following information:

* Product Number
* Product Description
* Contractor/Subcontractor Name(s)
* Quantity Shipped
* Net Price per order

CONTRACTOR COOPERATION AND REPORTING CAPABILITY DURING LIFE OF THE CONTRACT:

The contractor(s) must closely cooperate with the State contract administrator during the life of the contract. Coordination may require up to one visit to Sacramento per year to discuss contract administration issues. Contractor(s) must have the capability to provide annual usage reports in all product categories, including breakdown by specific lamp type. The contractor(s) must have capability to combine/merge usage reports from all sales locations.

PAYEE DATA RECORD:

A completed Payee Data Record (Std. 204) for each contractor noted on page 2, is included with this contract to facilitate ease of ordering.

Contract (Mandatory): 1-06-62-31

CONTRACTORS' WAREHOUSE LOCATIONS:

Lamp warehouse storage/shipping facilities listed below.

All-Phase Electric Supply

Warehouse Location:	2101 Empire Ave., Burbank, CA 91504
Approximate Warehouse Sq. Feet:	40,000
Number of Staff at Site:	23 (6,000 company wide)
Contact Person/Phone No.:	David Lauermann - 800-537-6300 Glinda Shipley - 562-243-7632 Also, see attachments.

Rayvern Lighting Supply

Warehouse Location:	7901 Somerset Blvd., Ste. C, Paramount, CA 90723
Approximate Warehouse Sq. Feet:	5,500
Number of Staff at Site:	9
Contact Person/Phone No.:	Maria Castellanos/Ralph Castellanos/Shirley King/ Frank Puliafico - 800-367-4499

Rayvern Lighting Supply/Philip's

Warehouse Location:	1375 E. Locust, Ontario, CA 91762
Approximate Warehouse Sq. Feet:	
Number of Staff at Site:	
Contact Person/Phone No.:	Marge Wistkens - 909-947-7010

West-Lite Supply Co.

Warehouse Location:	12951 166th St., Cerritos, CA 90703
Approximate Warehouse Sq. Feet:	12,600
Number of Staff at Site:	23
Contact Person/Phone No.:	John Fermin - 562-802-0224

and

Warehouse Location:	30510 San Antonio, Hayward, CA 94544
Approximate Warehouse Sq. Feet:	10,000
Number of Staff at Site:	17
Contact Person/Phone No.:	Cheryl Quistad - 510-487-8500

GENERAL PROVISIONS:

General Provisions GSPD-401 Non-IT Commodities, Revised and Effective 10/03/2005 apply to this contract.

ITEM NO.	COMMODITY NO. SUPPLIER PART NO.	SUPPLIER NO.	UNIT	DESCRIPTION	UNIT PRICE

CATEGORY 1 - T-12 LOWER MERCURY FLUORESCENT LAMPS

CATEGORY 1 CONTRACTOR: West-Lite Supply Co.
Manufacturer's Price Schedule: Sylvania 05-1-U

Contractor shall apply the same discount to all T-12 lamps within the referenced NEMA Lamp Classes meeting specifications for Category 1 which have an extended lamp life and any variance in color temperature, e.g., 3500, 4100, and 5000 degrees Kelvin.

1	6240-290-7109-0	186880	EA	LAMP FLUORESCENT MISCELLANEOUS (AS DESCRIBED) MANUFACTURER'S PRODUCT CODE #: 24542 NEMA LAMP CLASS: 34W/48T12/G13/RS/741	0.9100

Note: Lamp Price shown is the "net" price for the above noted NEMA Lamp Class, with an 90.52% discount off Manufacturer's List Price Schedule,listed for Category 1.

All other lamps meeting State of California Bid Specification 6240-05BS-001, dated November 2005 for Category 1, for the above noted NEMA Lamp Class shall be given the same 90.52% discount off Manufacturer's List Price Schedule - Sylvania 05-1-U.

2	6240-290-7109-0	186880	EA	LAMP FLUORESCENT MISCELLANEOUS (AS DESCRIBED) MANUFACTURER'S PRODUCT CODE #: 29853 NEMA LAMP CLASS: 60W/96T12/Fa8/IS/741	2.0400

Note: Lamp Price shown is the "net" price for the above noted NEMA Lamp Class, with an 89.59% discount off Manufacturer's List Price Schedule, listed for Category 1.

ITEM NO.	COMMODITY NO. SUPPLIER PART NO.	SUPPLIER NO.	UNIT	DESCRIPTION	UNIT PRICE
				All other lamps meeting State of California Bid Specification 6240-05BS-001, dated November 2005 for Category 1, for the above noted NEMA Lamp Class shall be given the same 89.59% discount off Manufacturer's List Price Schedule - Sylvania 05-1-U.	
3	6240-290-7109-0	186880	EA	LAMP FLUORESCENT MISCELLANEOUS (AS DESCRIBED) MANUFACTURER'S PRODUCT CODE #: 24067 NEMA LAMP CLASS: 34W/22T12/U6/2G13/RS/741	2.6900
				Note: Lamp Price shown is the "net" price for the above noted NEMA Lamp Class, with an 88.59% discount off Manufacturer's List Price Schedule, listed for Category 1.	
				All other lamps meeting State of California Bid Specification 6240-05BS-001, dated November 2005 for Category 1, for the above noted NEMA Lamp Class shall be given the same 88.59% discount off Manufacturer's List Price Schedule - Sylvania 05-1-U.	

CATEGORY 2 - LOWER MERCURY FLUORESCENT LAMPS (VARIOUS)

GROUP 2A - T-8 FLUORESCENT LAMPS

Group 2A Contractor: Rayvern Lighting Supply
Manufacturer's Price Schedule: Philips PS-100-U (Dated 7/1/05)

Contractor shall apply the same discount to all T-8 lamps within the referenced NEMA Lamp Classes meeting specifications for Group 2A which have an extended lamp life and any variance in color temperature, e.g., 3500, 4100, and 5000 degrees Kelvin.

ITEM NO.	COMMODITY NO. SUPPLIER PART NO.	SUPPLIER NO.	UNIT	DESCRIPTION	UNIT PRICE
4	6240-290-7109-0	178980	EA	LAMP FLUORESCENT MISCELLANEOUS (AS DESCRIBED) MANUFACTURER'S PRODUCT CODE #: 246710 NEMA LAMP CLASS: 32W/48T8/G13/IS/841 Note: Lamp Price shown is the "net" price for the above noted NEMA Lamp Class, with an 89.60% discount off Manufacturer's List Price Schedule, listed for Group 2A. All other lamps meeting State of California Bid Specification 6240-05-0BS-001, dated November 2005 for Group 2A, for the above noted NEMA Lamp Class shall be given the same 89.60% discount off Manufacturer's List Price Schedule - Phillips PS-100-U (Dated 7/1/05)	1.2900
5	6240-290-7109-0	178980	EA	LAMP FLUORESCENT MISCELLANEOUS (AS DESCRIBED) MANUFACTURER'S PRODUCT CODE #: 388025 NEMA LAMP CLASS: 59W/96T8/Fa8/IS/841 Note: Lamp Price shown is the "net" price for the above noted NEMA Lamp Class, with an 87.35% discount off Manufacturer's List Price Schedule, listed for Group 2A. All other lamps meeting State of California Bid Specification 6240-0BS-001, dated November 2005 for Group 2A, for the above noted NEMA Lamp Class shall be given the same 87.35% discount off Manufacturer's List Price Schedule - Philips PS-100-U (Dated 7/1/05).	3.1000
6	6240-290-7109-0	178980	EA	LAMP FLUORESCENT MISCELLANEOUS (AS DESCRIBED) MANUFACTURER'S PRODUCT CODE #: 379024 NEMA LAMP CLASS: 32W/22T8/U6/2G13/IS/841	3.8500

ITEM NO.	COMMODITY NO. SUPPLIER PART NO.	SUPPLIER NO.	UNIT	DESCRIPTION	UNIT PRICE

Note: Lamp Price shown is the "net" price for the above noted NEMA Lamp Class, with an 88.55% discount off Manufacturer's List Price Schedule, listed for Group 2A.

All other lamps meeting State of California Bid Specification 6240-05BS-001, dated November 2005 for Group 2A, for the above noted NEMA Lamp Class shall be given the same 88.55% discount off Manufacturer's List Price Schedule - Philips PS-100-U (Dated 7/1/05).

GROUP 2B -COMPACT FLUORESCENT LAMPS (CFL's)

Group 2B Contractor: All-Phase Electric Supply
Manufacturer's Price Schedule: Sylvania 05-1-U

Contractor shall apply the same discount to all other CFL's within the referenced NEMA Lamp Classes meeting specifications for Group 2B which have any variance in color temperature, e.g., 3500, 4100, and 5000 degrees Kelvin.

7	6240-290-7109-0	771399	EA	LAMP FLUORESCENT MISCELLANEOUS (AS DESCRIBED) MANUFACTURER'S PRODUCT CODE #: 20306 NEMA LAMP CLASS: 13W/7.1T4/T/GX23/PH/841	1.1200

Note: Lamp Price shown is the "net" price for the above noted NEMA Lamp Class, with an 86% discount off Manufacturer's List Price Schedule, listed for Group 2B.

All other lamps meeting State of California Bid Specification 6240-05BS-001, dated November 2005 for Group 2B, for the above noted NEMA Lamp Class shall be given the same 86% discount off Manufacturer's List Price Schedule - Sylvania 05-1-U.

ITEM NO.	COMMODITY NO. SUPPLIER PART NO.	SUPPLIER NO.	UNIT	DESCRIPTION	UNIT PRICE
8	6240-290-7109-0	771399	EA	LAMP FLUORESCENT MISCELLANEOUS (AS DESCRIBED) MANUFACTURER'S PRODUCT CODE #: 20681 NEMA LAMP CLASS: 26W/6.8T4/Q/G24d/PH/841	3.0400
				Note: Lamp Price shown is the "net" price for the above noted NEMA Lamp Class, with an 88% discount off Manufacturer's List Price Schedule, listed for Group 2B. All other lamps meeting State of California Bid Specification 6240-05BS-001, dated November 2005 for Group 2B, for the above noted NEMA Lamp Class shall be given the same 88% discount off Manufacturer's List Price Schedule - Sylvania 05-1-U.	
9	6240-290-7109-0	771399	EA	LAMP FLUORESCENT MISCELLANEOUS (AS DESCRIBED) MANUFACTURER'S PRODUCT CODE #: 20669 NEMA LAMP CLASS: 26W/6.5T4/Q/G24q/HF/841	3.1700
				Note: Lamp Price shown is the "net" price for the above noted NEMA Lamp Class, with an 86% discount off Manufacturer's List Price Schedule, listed for Group 2B. All other lamps meeting State of California Bid Specification 6240-05BS-001, dated November 2005 for Group 2B, for the above noted NEMA Lamp Class shall be given the same 86% discount off Manufacturer's List Price Schedule - Sylvania 05-1-U.	

ITEM NO.	COMMODITY NO. SUPPLIER PART NO.	SUPPLIER NO.	UNIT	DESCRIPTION	UNIT PRICE
10	6240-290-7109-0	771399	EA	LAMP FLUORESCENT MISCELLANEOUS (AS DESCRIBED) MANUFACTURER'S PRODUCT CODE #: 20304 NEMA LAMP CLASS: 7W/5.3T4/T/G23/PH/841	1.0100

Note: Lamp Price shown is the "net" price for the above noted NEMA Lamp Class, with an 89% discount off Manufacturer's List Price Schedule, listed for Group 2B.

All other lamps meeting State of California Bid Specification 6240-05BS-001, dated November 2005 for Group 2B, for the above noted NEMA Lamp Class shall be given the same 89% discount off Manufacturer's List Price Schedule - Sylvania 05-1-U.

11	6240-290-7109-0	771399	EA	LAMP FLUORESCENT MISCELLANEOUS (AS DESCRIBED) GROUP 2B - COMPACT FLUORESCENT LAMPS (CFL's) ALL OTHER CFL's "NOT SPECIFIED" ABOVE.	VARIABLE

All other compact fluorescent lamps meeting State of California Bid Specification 6240-05BS-001, dated November 2005 for Group 2B shall be made available at an 89% discount off Manufacturer's List Price Schedule - Sylvania 05-1-U.

ITEM NO.	COMMODITY NO. SUPPLIER PART NO.	SUPPLIER NO.	UNIT	DESCRIPTION	UNIT PRICE
				GROUP 2C - ALL OTHER/EXCLUDED FLUORESCENT LAMPS	
				Group 2C Contractor: West-Lite Supply Co. Manufacturer's Price Schedule: Sylvania 05-1-U	
				Note: All "Excluded" fluorescent lamps are contained in the Sylvania 05-1-U "Excluded Lamp Price Schedule".	
				Contractor shall apply the same discount to all other fluorescent lamps which fall within (but not limited to) the examples specified in Bid Specification 6240-05BS-001 that are "TCLP Compliant".	
12	6240-290-7109-0	186880	EA	LAMP FLUORESCENT MISCELLANEOUS (AS DESCRIBED) GROUP 2C -ALL OTHER FLUORESCENT LAMPS ALL OTHER "EXCLUDED" FLUORESCENT LAMPS	VARIABLE
				All other "excluded" fluorescent lamps meeting State of California Bid Specification 6240-05BS-001, dated November 2005 for Group 2C shall be made available at an 83.7% discount off Manufacturer's List Price Schedule - Sylvania 05-1-U ("Excluded Lamp Price Schedule").	
13	6240-290-7109-0	186880	EA	LAMP FLUORESCENT MISCELLANEOUS (AS DESCRIBED) GROUP 2C - ALL OTHER FLUORESCENT LAMPS ALL OTHER FLUORESCENT LAMPS NOT SPECIFIED IN GROUPS 2A & 2B OR "EXCLUDED LAMP PRICE SCHEDULE".	VARIABLE
				All other fluorescent lamps not specified in Groups 2A and 2B meeting State of California Bid Specification 6240-05BS-001, dated November 2005 for Category 2C shall be made available at a 90.27% discount off Manufacturer's List Price Schedule - Sylvania 05-1-U	

ITEM NO.	COMMODITY NO. SUPPLIER PART NO.	SUPPLIER NO.	UNIT	DESCRIPTION	UNIT PRICE
				CATEGORY 3 - NON-FLUORESCENT LAMPS	
				CATEGORY 3 CONTRACTOR: West-Lite Supply Co. Manufacturer's Price Schedule: Sylvania 05-1-U	
				GROUP 3A - INCANDESCENT LAMPS	
14	6240-290-7110-6	186880	EA	LAMP INCANDESCENT MISCELLANEOUS (AS DESCRIBED) GROUP 3A - INCANDESCENT LAMPS Manufacturer's Product Code: 60A/52/SS/XL-120V	0.2900
	Note: Lamp Price shown is the "net" price, with an 88.07% discount off of the Manufacturer's List Price Schedule, listed for Category 3.				
15	6240-290-7110-6	186880	EA	LAMP INCANDESCENT MISCELLANEOUS (AS DESCRIBED) GROUP 3A - INCANDESCENT LAMPS Manufacturer's Product Code: #15918 - 300PS35/IF-120V	1.0000
	Note: Lamp Price shown is the "net" price, with an 89.10% discount off of the Manufacturer's List Price Schedule, listed for Category 3.				
16	6240-290-7110-6	186880	EA	LAMP INCANDESCENT MISCELLANEOUS (AS DESCRIBED) GROUP 3A - INCANDESCENT LAMPS Manufacturer's Product Code: #10645 - 25A-130V	0.3400
	Note: Lamp Price shown is the "net" price, with an 87.90% discount off of the Manufacturer's List Price Schedule, listed for Category 3.				

ITEM NO.	COMMODITY NO. SUPPLIER PART NO.	SUPPLIER NO.	UNIT	DESCRIPTION	UNIT PRICE
17	6240-290-7110-6	186880	EA	LAMP INCANDESCENT MISCELLANEOUS (AS DESCRIBED) GROUP 3A - INCANDESCENT LAMPS Manufacturer's Product Code: #11180 - 60A/4/RP-120V	0.1500
				Note: Lamp Price shown is the "net" price, with an 88.49% discount off of the Manufacturer's List Price Schedule, listed for Category 3.	
18	6240-290-7110-6	186880	EA	LAMP INCANDESCENT MISCELLANEOUS (AS DESCRIBED) GROUP 3A - INCANDESCENT LAMPS Manufacturer's Product Code: #12750 - 100A/4/RP-120V	0.1500
				Note: Lamp Price shown is the "net" price, with an 88.49% discount off of the Manufacturer's List Price Schedule, listed for Category 3.	
19	6240-290-7110-6	186880	EA	LAMP INCANDESCENT MISCELLANEOUS (AS DESCRIBED) GROUP 3A - INCANDESCENT LAMPS Manufacturer's Product Code: #15102 - 50ER30-120V	1.2300
				Note: Lamp Price shown is the "net" price, with an 87.96% discount off of the Manufacturer's List Price Schedule, listed for Category 3.	
20	6240-290-7110-6	186880	EA	LAMP INCANDESCENT MISCELLANEOUS (AS DESCRIBED) GROUP 3A - INCANDESCENT LAMPS Manufacturer's Product Code: #15505 - 200A23-120V	0.3700
				Note: Lamp Price shown is the "net" price, with an 89.54% discount off of the Manufacturer's List Price Schedule, listed for Category 3.	

ITEM NO.	COMMODITY NO. SUPPLIER PART NO.	SUPPLIER NO.	UNIT	DESCRIPTION	UNIT PRICE
21	6240-290-7110-6	186880	EA	LAMP INCANDESCENT MISCELLANEOUS (AS DESCRIBED) GROUP 3A - INCANDESCENT LAMPS All other incandescent lamps "not specified above".	VARIABLE

NOTE: Contractor shall make available all other Group 3A incandescent lamps "not specified above" at an 88.93% discount off the Manufacturer's List Price Schedule - Sylvania 05-1-U.

GROUP 3B - EXCLUDED NON-FLUORESCENT LAMPS

Manufacturer's Price Schedule: Sylvania 05-1-U ("Excluded Lamp Price Schedule")

22	6240-290-7111-8	186880	EA	LAMP EXCLUDED MISCELLANEOUS (AS DESCRIBED) GROUP 3B - EXCLUDED NON-FLUORESCENT LAMPS Manufacturer's Product Code: #64587 - MP50/U/MED	13.0600

Note: Lamp Price shown is the "net" price, with an 88.67% discount off of the Manufacturer's List Price Schedule, listed for Category 3.

23	6240-290-7111-8	186880	EA	LAMP EXCLUDED MISCELLANEOUS (AS DESCRIBED) GROUP 3B - EXCLUDED NON-FLUORESCENT LAMPS Manufacturer's Product Code: #64418 - MP100/C/U/MED	13.5600

Note: Lamp Price shown is the "net" price, with an 85.75% discount off of the Manufacturer's List Price Schedule, listed for Category 3.

ITEM NO.	COMMODITY NO. SUPPLIER PART NO.	SUPPLIER NO.	UNIT	DESCRIPTION	UNIT PRICE
24	6240-290-7111-8	186880	EA	LAMP EXCLUDED MISCELLANEOUS (AS DESCRIBED) GROUP 3B - EXCLUDED NON-FLUORESCENT LAMPS Manufacturer's Product Code: #64402 - MP150/U/MED	13.0700
				Note: Lamp Price shown is the "net" price, with an 88.02% discount off of the Manufacturer's List Price Schedule, listed for Category 3.	
25	6240-290-7111-8	186880	EA	LAMP EXCLUDED MISCELLANEOUS (AS DESCRIBED) GROUP 3B - EXCLUDED NON-FLUORESCENT LAMPS Manufacturer's Product Code: #64546 - MP70/C/U/MED	13.5500
				Note: Lamp Price shown is the "net" price, with an 88.82% discount off of the Manufacturer's List Price Schedule, listed for Category 3.	
26	6240-290-7111-8	186880	EA	LAMP EXCLUDED MISCELLANEOUS (AS DESCRIBED) GROUP 3B - EXCLUDED NON-FLUORESCENT LAMPS Manufacturer's Product Code: #64417 - MP100/U/MED	13.0600
				Note: Lamp Price shown is the "net" price, with an 85.50% discount off of the Manufacturer's List Price Schedule, listed for Category 3.	
27	6240-290-7111-8	186880	EA	LAMP EXCLUDED MISCELLANEOUS (AS DESCRIBED) GROUP 3B - EXCLUDED NON-FLUORESCENT LAMPS	VARIABLE
				NOTE: Contractor shall make available all other Group 3B - Excluded Non-Fluorescent Lamps "not specified above" at an 80.02% discount off the Manufacturer's List Price Schedule - Sylvania 05-1-U. ("Excluded Lamp Price Schedule")	

ITEM NO.	COMMODITY NO. SUPPLIER PART NO.	SUPPLIER NO.	UNIT	DESCRIPTION	UNIT PRICE
				GROUP 3C - METAL HALIDE LAMPS	
28	6240-290-7113-1	186880	EA	LAMP METAL HALIDE MISCELLANEOUS (AS DESCRIBED) GROUP 3C - METAL HALIDE LAMPS Manufacturer's Product Code: #64468 - M1000/U	18.6100
	Note: Lamp Price shown is the "net" price, with an 88.82% discount off of the Manufacturer's List Price Schedule, listed for Category 3.				
29	6240-290-7113-1	186880	EA	LAMP METAL HALIDE MISCELLANEOUS (AS DESCRIBED) GROUP 3C - METAL HALIDE LAMPS Manufacturer's Product Code: #64457 - M250/U	8.7000
	Note: Lamp Price shown is the "net" price, with an 88.02% discount off of the Manufacturer's List Price Schedule, listed for Category 3.				
30	6240-290-7113-1	186880	EA	LAMP METAL HALIDE MISCELLANEOUS (AS DESCRIBED) GROUP 3C - METAL HALIDE LAMPS Manufacturer's Product Code: #64471 - M175/U	8.6600
	Note: Lamp Price shown is the "net" price, with an 86.52% discount off of the Manufacturer's List Price Schedule, listed for Category 3.				
31	6240-290-7113-1	186880	EA	LAMP METAL HALIDE MISCELLANEOUS (AS DESCRIBED) GROUP 3C - METAL HALIDE LAMPS Manufacturer's Product Code: #64490 - M400/U	8.2500
	Note: Lamp Price shown is the "net" price, with an 88.02% discount off of the Manufacturer's List Price Schedule, listed for Category 3.				

ITEM NO.	COMMODITY NO. SUPPLIER PART NO.	SUPPLIER NO.	UNIT	DESCRIPTION	UNIT PRICE
32	6240-290-7113-1	186880	EA	LAMP METAL HALIDE MISCELLANEOUS (AS DESCRIBED) GROUP 3C - METAL HALIDE LAMPS ALL OTHER METAL HALIDE LAMPS "NOT SPECIFIED" ABOVE.	VARIABLE

NOTE: Contractor shall make available all other Group 3C metal halide lamps "not specified above" at an 86.02% discount off the Manufacturer's List Price Schedule - Sylvania 05-1-U.

GROUP 3D - TUNGSTEN HALOGEN LAMPS

33	6240-290-7115-5	186880	EA	LAMP TUNGSTEN HALOGEN MISCELLANEOUS (AS DESCRIBED) GROUP 3D - TUNGSTEN HALOGEN LAMPS Manufacturer's Product Code: #58741 - 150Q/CL/DC-120V	3.5900

Note: Lamp Price shown is the "net" price, with a 90.02% discount off of the Manufacturer's List Price Schedule, listed for Category 3.

34	6240-290-7115-5	186880	EA	LAMP TUNGSTEN HALOGEN MISCELLANEOUS (AS DESCRIBED) GROUP 3D - TUNGSTEN HALOGEN LAMPS ALL OTHER TUNGSTEN HALOGEN LAMPS "NOT SPECIFIED ABOVE".	VARIABLE

NOTE: Contractor shall make available all other Group 3D tungsten halogen lamps "not specified above" at an 88.71% discount off the Manufacturer's List Price Schedule - Sylvania 05-1-U.

ITEM NO.	COMMODITY NO. SUPPLIER PART NO.	SUPPLIER NO.	UNIT	DESCRIPTION	UNIT PRICE
				GROUP 3E - QUARTZ LAMPS	
35	6240-290-7106-4	186880	EA	LAMP QUARTZ (AS DESCRIBED) GROUP 3E - QUARTZ LAMPS Manufacturer's Product Code: #58996 - 500T3Q/CL-120V	1.9400
				Note: Lamp Price shown is the "net" price, with an 89.02% discount off of the Manufacturer's List Price Schedule, listed for Category 3.	
36	6240-290-7106-4	186880	EA	LAMP QUARTZ (AS DESCRIBED) GROUP 3E - QUARTZ LAMPS ALL OTHER QUARTZ LAMPS "NOT SPECIFIED" ABOVE.	VARIABLE
				NOTE: Contractor shall make available all other Group 3E quartz lamps "not specified above" at an 88.71% discount off the Manufacturer's List Price Schedule - Sylvania 05-1-U.	
				GROUP 3F - HIGH PRESSURE SODIUM LAMPS	
37	6240-290-7114-3	186880	EA	LAMP HIGH PRESSURE SODIUM MISCELLANEOUS (AS DESCRIBED) GROUP 3F - HIGH PRESSURE SODIUM LAMPS Manufacturer's Product Code: #67576 - LU200/ECO	8.1400
				Note: Lamp Price shown is the "net" price, with a 92.22% discount off of the Manufacturer's List Price Schedule, listed for Category 3.	
38	6240-290-7114-3	186880	EA	LAMP HIGH PRESSURE SODIUM MISCELLANEOUS (AS DESCRIBED) GROUP 3F - HIGH PRESSURE SODIUM LAMPS Manufacturer's Product Code: #67516 - LU150/55/ECO	6.3100

ITEM NO.	COMMODITY NO. SUPPLIER PART NO.	SUPPLIER NO.	UNIT	DESCRIPTION	UNIT PRICE
				Note: Lamp Price shown is the "net" price, with a 92.12% discount off of the Manufacturer's List Price Schedule, listed for Category 3.	
39	6240-290-7114-3	186880	EA	LAMP HIGH PRESSURE SODIUM MISCELLANEOUS (AS DESCRIBED) GROUP 3F - HIGH PRESSURE SODIUM LAMPS Manufacturer's Product Code: #67514 - LU 100/ECO	6.0800
				Note: Lamp Price shown is the "net" price, with a 92.22% discount off of the Manufacturer's List Price Schedule, listed for Category 3.	
40	6240-290-7114-3	186880	EA	LAMP HIGH PRESSURE SODIUM MISCELLANEOUS (AS DESCRIBED) GROUP 3F - HIGH PRESSURE SODIUM LAMPS Manufacturer's Product Code: #67580 - LU310/ECO	10.8500
				Note: Lamp Price shown is the "net" price, with a 93.22% discount off of the Manufacturer's List Price Schedule, listed for Category 3.	
41	6240-290-7114-3	186880	EA	LAMP HIGH PRESSURE SODIUM MISCELLANEOUS (AS DESCRIBED) GROUP 3F - HIGH PRESSURE SODIUM LAMPS Manufacturer's Product Code: #67543 - LU1000/SBY	46.2900
				Note: Lamp Price shown is the "net" price, with a 93.02% discount off of the Manufacturer's List Price Schedule, listed for Category 3.	

ITEM NO.	COMMODITY NO. SUPPLIER PART NO.	SUPPLIER NO.	UNIT	DESCRIPTION	UNIT PRICE
42	6240-290-7114-3	186880	EA	LAMP HIGH PRESSURE SODIUM MISCELLANEOUS (AS DESCRIBED) GROUP 3F - HIGH PRESSURE SODIUM LAMPS ALL OTHER HIGH PRESSURE SODIUM LAMPS "NOT SPECIFIED" ABOVE.	VARIABLE
				NOTE: Contractor shall make available all other Group 3F high pressure sodium lamps "not specified above" at a 91.82% discount off the Manufacturer's List Price Schedule - Sylvania 05-1-U.	
				GROUP 3G - LOW PRESSURE SODIUM LAMPS	
43	6240-999-0025-4	186880	EA	LAMP LOW PRESSURE SODIUM (AS DESCRIBED) GROUP 3G - LOW PRESSURE SODIUM LAMPS Manufacturer's Product Code: #69515 - SOX180	27.8800
				Note: Lamp Price shown is the "net" price, with an 88.02% discount off of the Manufacturer's List Price Schedule, listed for Category 3.	
44	6240-999-0025-4	186880	EA	LAMP LOW PRESSURE SODIUM (AS DESCRIBED) GROUP 3G - LOW PRESSURE SODIUM LAMPS ALL OTHER LOW PRESSURE SODIUM LAMPS "NOT SPECIFIED" ABOVE.	VARIABLE
				NOTE: Contractor shall make available all other Group 3G low pressure sodium lamps "not specified above" at an 89.22% discount off the Manufacturer's List Price Schedule - Sylvania 05-1-U.	

ITEM NO.	COMMODITY NO. SUPPLIER PART NO.	SUPPLIER NO.	UNIT	DESCRIPTION	UNIT PRICE
				GROUP 3H - MERCURY VAPOR LAMPS	
45	6240-290-7112-0	186880	EA	LAMP MERCURY VAPOR MISCELLANEOUS (AS DESCRIBED) GROUP 3H - MERCURY VAPOR LAMPS Manufacturer's Product Code: #69445 - H39KC-175/DX	4.0500
				Note: Lamp Price shown is the "net" price, with an 88.10% discount off of the Manufacturer's List Price Schedule, listed for Category 3.	
46	6240-290-7112-0	186880	EA	LAMP MERCURY VAPOR MISCELLANEOUS (AS DESCRIBED) GROUP 3H - MERCURY VAPOR LAMPS Manufacturer's Product Code: #69450 - H33GL-400/DX	5.7200
				Note: Lamp Price shown is the "net" price, with an 89.52% discount off of the Manufacturer's List Price Schedule, listed for Category 3.	
47	6240-290-7112-0	186880	EA	LAMP MERCURY VAPOR MISCELLANEOUS (AS DESCRIBED) GROUP 3H - MERCURY VAPOR LAMPS Manufacturer's Product Code: #69403 - H38AV100-DX	10.1600
				Note: Lamp Price shown is the "net" price, with an 88.02% discount off of the Manufacturer's List Price Schedule, listed for Category 3.	
48	6240-290-7112-0	186880	EA	LAMP MERCURY VAPOR MISCELLANEOUS (AS DESCRIBED) GROUP 3H - MERCURY VAPOR LAMPS ALL OTHER MERCURY VAPOR LAMPS "NOT SPECIFIED" ABOVE.	VARIABLE
				NOTE: Contractor shall make available all other Group 3H mercury vapor lamps "not specified above" at an 86.52% discount off the Manufacturer's List Price Schedule - Sylvania 05-1-U.	

ITEM NO.	COMMODITY NO. SUPPLIER PART NO.	SUPPLIER NO.	UNIT	DESCRIPTION	UNIT PRICE
				GROUP 3I - HALOGEN LAMPS	
49	6240-290-7102-7	186880	EA	LAMP INCANDESCENT/HALOGEN (AS DESCRIBED) GROUP 3I - HALOGEN LAMPS Manufacturer's Product Code: 90PAR/CAP/FL-120V	2.5100
	Note: Lamp Price shown is the "net" price, with an 82.32% discount off of the Manufacturer's List Price Schedule, listed for Category 3.				
50	6240-290-7102-7	186880	EA	LAMP INCANDESCENT/HALOGEN (AS DESCRIBED) GROUP 3I - HALOGEN LAMPS Manufacturer's Product Code: 90PAR/CAP/FL-130V	2.5500
	Note: Lamp Price shown is the "net" price, with an 85.02% discount off of the Manufacturer's List Price Schedule, listed for Category 3.				
51	6240-290-7102-7	186880	EA	LAMP INCANDESCENT/HALOGEN (AS DESCRIBED) GROUP 3I - HALOGEN LAMPS ALL OTHER HALOGEN LAMPS "NOT SPECIFIED" ABOVE.	VARIABLE
	NOTE: Contractor shall make available all other Group 3I halogen lamps "not specified above" at a 78.52% discount off the Manufacturer's List Price Schedule - Sylvania 05-1-U.				

ITEM NO.	COMMODITY NO. SUPPLIER PART NO.	SUPPLIER NO.	UNIT	DESCRIPTION	UNIT PRICE
				FOR DATA ENTRY USE ONLY	
52	6240-909-0001-4	186880	VA	LAMP-DGS/PROCUREMENT USE ONLY	VARIABLE
53	6240-909-0001-4	178980	VA	LAMP-DGS/PROCUREMENT USE ONLY	VARIABLE
54	6240-909-0001-4	771399	VA	LAMP-DGS/PROCUREMENT USE ONLY	VARIABLE

T-8 BALLAST PROVISION

Contractor (Rayvern Lighting Supply) has offered energy saving fluorescent ballasts that are designed to operate in combination with the T-8 lamps available on this contract.

Contractor agrees to offer ballasts from the following catalog at the discount listed.

The following ballasts have been approved for order.

Ballast Catalog: DPS0606L
Brand: Universal
Discount: 82.45% off List Price
Ballast Category: Electronic Linear Fluorescent (ELEC) Only

FLUORESCENT LAMP DISPOSAL/RECYLING REQUIREMENT:

All bidders offering fluorescent lamps shall provide information for services for the disposal and recycling of fluorescent lamps under the CALIFORNIA LAMP CONTRACT. The service shall include availability of containers for the safe return by a using agency of fluorescent lamps to the contractor. The contractor shall also assure the State that, once received, the lamps will be properly recycled and/or disposed of.

ITEM NO.	COMMODITY NO. SUPPLIER PART NO.	SUPPLIER NO.	UNIT	DESCRIPTION	UNIT PRICE

West-Lite Supply Co.

Linear Fluorescent Lamps	$0.07/ft
U Tube/Compact/Biax/Par Fluorescent Lamps	$0.45/lamp
HID (Mercury, Metal Halide, Low Pressure Sodium (LPS), High Pressure Sodium (HPS)) Lamps	$1.15/lamp
Coated or Shattershield Fluorescent Lamps	$1.50/lamp
Ultraviolet/Germicidal Lamps	$3.85/lamp
Broken Lamps - DOT 55 Drum	$385.00/drum
Freight Prepaid - 4 ft Easi-Pak (158 T8 or 73 T12)	$65.00/pak
Freight Prepaid - 8 ft Easi-Pak (36 T8 or 18 T12)	$65.00/pak
State facilities must pay freight to West-Lite warehouse.	$ + freight

Rayvern Lighting Supply

Option #1 - for smaller volume user with inadequate warehousing capability to store spent lamps. Various prepaid containers offered to suit application.

Option #2 - for large volume user with warehousing capability. User collects spent lamps, palletizes, and shrink-wraps. User calls company to schedule pick-up. The end user is then sent documentation showing material has been recycled responsibly and correctly.

50 cases - 4 ft/or 25 cases - 8 ft (palletized & shrink-wrapped)	$540.00/pallet
4' Recycle Pak Lamp Box (30-36 of T12 lamps/68-72 of T8 lamps)	$54.99 ea.
8' Recycle Pak Lamp Box (15-18 of T12 lamps/25-30 of T8 lamps)	$54.99 ea.
2' Recycle Pak Lamp Box (U-Tubes/HID/Misc. Lamps)	$89.99 ea.
4' Recycle Pak Lamp Drum (85 of T12 Lamps/170 of T8 Lamps)	$104.99 ea.

ITEM NO.	COMMODITY NO. SUPPLIER PART NO.	SUPPLIER NO.	UNIT	DESCRIPTION	UNIT PRICE

All-Phase Electric Supply

Earth Protection Services, Inc. (www.earthpro.com) is utilized.
Container, pick-up and certification provided. EPSI PAK - Prepaid Box w/certificate available.

per linear foot fluorescent	.06/ft.
per compact fluorescent	.30/lamp
EPSI PAK Prepaid Box & Certificate (holds 158 of T8's or 73 of T12's)	$60.00/box
U-Tube	.32/lamp
HID - Mercury/Metal Halide/LPS/HPS	.95/lamp
Incandescent	.50/lamp
Broken Lamps - DOT 55 Drum	$250.00/drum

PALLETS:

Some Agencies may require special palletized delivery. In those cases, the contractor must deliver on the specific size and type of pallet specified on the order. All pallets must comply with the State of California Specification 3990-01A-01, dated January 2001, for Size 2, Type 2 (42" x 42").

IF A SPECIAL SIZE AND TYPE PALLET IS NOT SPECIFIED, THE CONTRACTOR'S STANDARD SHIPPING PALLET WILL BE ACCEPTABLE.

UPCHARGE COST FOR THE PALLET:	All-Phase Electric Supply =	$15.00/pallet
	Rayvern Lighting Supply =	$17.87/pallet
	West-Lite Supply Co. =	$5.00/pallet

1.0 SCOPE

This specification describes the requirements for T12, T8, compact and other replacement fluorescent lamps to be used in State buildings.

2.0 SPECIFICATIONS AND STANDARDS

Specifications and standards referenced in this document in effect on the opening of the Invitation for Bid forms a part of this specification where referenced. All applicable ANSI, IES, and NEMA standards in effect at the time of bid opening shall apply. All lamp performance specifications shall be measured in accordance with these standards.

All references to the amount of mercury (Hg) found in fluorescent lamps identifies the maximum amount of mercury the state would expect to find in any one lamp. If a lamp manufacturer provides a range of mercury content due to the manufacturing process, the state will use the maximum amount from the range provided as the set amount of mercury the state would expect to find in any one lamp.

3.0 REQUIREMENTS

All fluorescent lamps offered shall be compliant with the U.S. EPA Toxicity Characteristic Leaching Procedure (TCLP). Fluorescent lamps meeting TCLP shall be divided into the following two categories. Category 2 shall be divided into the following three groups.

Category	Group	Description
1		T 12 Fluorescent Lamps
2	2 A	T 8 Fluorescent Lamps
	2 B	Compact Fluorescent Lamps (CFL)
	2 C	All Other Fluorescent Lamps

3.1 <u>T 12 Fluorescent Lamps (Category 1)</u>

The following table identifies three classes of T 12 fluorescent lamps that fall into this category. Suppliers must offer lamps from a manufacturer capable of providing one or more lamps from each of the following three classes. T 12 fluorescent lamps in this category shall meet or exceed the following requirements.

NEMA Class	Tube Type	Minimum Color Rendering Index (CRI)	Minimum Rated Lamp Life (See Note 1)	Maximum Hg Content
34W/48T12/G13/RS	Straight	70	20,000 hours	10 mg
60W/96T12/Fa8/IS	Straight	70	12,000 hours	10 mg
34W/22T12/U6/2G13/RS	U-Bend	70	18,000 hours	10 mg

Note 1: *Minimum rated lamp life is based on 3 hr/start cycle testing with a 0.9 magnetic rapid start ballast. However, minimum rated lamp life for single pin (Fa8) base lamps is based on 3 hr/start cycle testing with a 0.9 electronic instant start ballast.*

All other T 12 fluorescent lamps that are TCLP compliant (including pre-heat, all high output, and straight fluorescent lamps other than 48 and 96 inches) fall into the "All Other Fluorescent Lamps" group 2C below.

3.2 T 8 Fluorescent Lamps (Category 2, Group 2A)

The following table identifies four lamp classes of T 8 fluorescent lamps that fall into this category and group. Suppliers must offer lamps from a manufacturer capable of providing one or more lamps from each of the following four lamp classes. T 8 lamps in this category and group shall meet or exceed the following requirements.

NEMA Lamp Class	Tube Type	Minimum Color Rendering Index (CRI)	Minimum Rated Lamp Life (See Note 2)	Maximum Hg Content
32W/48T8/G13/IS	Straight	80	18,000 hours	5 mg
59W/96T8/Fa8/IS	Straight	80	18,000 hours	10 mg
31W/22T8/U1/2G13/IS	U-Bend	80	18,000 hours	10 mg
32W/22T8/U6/2G13/IS	U-Bend	80	18,000 hours	10 mg

Note 2: *Minimum rated lamp life is based on 3 hr/start cycle testing with a 0.9 electronic instant start ballast.*

All other T 8 fluorescent lamps that are TCLP compliant (including pre-heat, all high output, and straight fluorescent lamps other than 48 and 96 inches) fall into the "All Other Fluorescent Lamps" group 2C below.

3.3 Compact Fluorescent Lamps (CFL) (Category 2, Group 2B)

All CFLs shall contain no more than 5 mg Hg. All self-ballasted CFLs shall be Energy Star qualified. Suppliers must offer lamps from a manufacturer capable of providing 2-pin and 4-pin CFLs as well as straight tube and twist tube type self-ballasted CFLs.

3.4 All Other Fluorescent Lamps (Category 2, Group 2C)

All other fluorescent lamps that are TCLP compliant which were not previously identified in category 1 and category 2, group 2A, shall fall into this group. Examples include, but are not limited to, the following:

- T 5 fluorescent lamps
- All circular fluorescent lamps
- All high output fluorescent lamps (regardless of length)
- Pre-heat T 8 and T 12 fluorescent lamps (regardless of length)
- T 12 straight fluorescent lamps other than 48 and 96 inches in length
- T 8 straight fluorescent lamps other than 48 and 96 inches in length

STATE OF CALIFORNIA
DEPARTMENT OF TRANSPORTATION
ADMINISTRATIVE SERVICE CENTER
OFFICE OF PROCUREMENT AND CONTRACTS
1900 ROYAL OAKS DRIVE
SACRAMENTO, CA 95815
PHONE: (916) 322-2137

Specifications For High Pressure Sodium Lamps

1.0 SCOPE

This specification covers high-pressure sodium lamps used in luminaires for pavement illumination.

2.0 SPECIFICATIONS AND STANDARDS

The following specifications, standards, and test method form a part of this specification. If there is a conflict this specification shall prevail:

- Military Standard, MIL-STD-105D, Sampling Procedures and Tables for Inspection by Attributes.
- American National Standards Institute (ANSI) C78.388 Methods of Measurement of High-Pressure Sodium Lamp Characteristics
- American National Standards Institute (ANSI) C78 Series on High-Pressure Sodium Lamp Specifications
- California Test 610 "Method of Test for Electrical Characteristics of High-Pressure Sodium Lamps".

3.0 REQUIREMENTS

3.1 Mechanical Requirements

The lamps shall be designed to operate in any position and resist failure to shock or failure due to long-term cumulative effects of vibration in the roadway environment.

3.2 Glass Envelope

The envelope shall be clear glass.

3.3 Arc Tube

The light center length for 70 watt through 150 watt/55 volt lamps shall be 127mm ± 3mm (5.0in. ± 0.12in.). The light center length for 200 watt through 400 watt shall be 146mm ± 3mm (5.75in. ± 0.12in.).

3.4 Base

The base shall be a mogul screw (E39). ANSI C78 Lamp Standards.

4.0 Electrical Characteristics

4.1 Test Parameters

Prior to seasoning, initial lamp voltage shall not exceed 115 volts after lamp stabilization is achieved. After the lamps have been seasoned for 100 hours they shall be tested for the electrical characteristics of lamp voltage shown in Figure 1. These characteristics apply to bare lamps operating in the horizontal position, in an ambient temperature of 25° C +/- 5°C (77F +/- 9°F), on a 60Hz sinusoidal power supply. Measurements are made after the lamp stabilizes (typically about 20 minutes after power application).

4.2 Initial Lumen Output

The lamp lumens are measured at nominal lamp wattage after the lamp stabilizes. The testing shall be conducted under the same test conditions discussed in Paragraph 4.1. The lumens of each lamp tested shall not fall below 85% of the initial lumens listed in Figure 3.

5.0 WORKMANSHIP

Workmanship by the manufacturer shall be equivalent or better than accepted industry practice.

6.0 QUALITY ASSURANCE PROVISIONS

6.1 Inspection

Caltrans will perform inspections and tests on delivery lots of high-pressure sodium lamps. A delivery lot is defined as one delivery to one agency at one time. A production lot may be accepted if a prior delivery lot from the same production lot is accepted. A production lot is defined as lamps manufactured in one continuous production run.

6.2 Sampling

Delivery lots will be randomly sampled in accordance with the provisions of MIL-STD-105D, for double sampling plans at an inspection level of S-4 and AQL of 2.5%. For example, if the delivery lot is between 501 and 1200 lamps (see Figure 2) under normal inspection the sample size shall be 13 lamps. If there are no failures in meeting specifications, the entire delivery lot will be accepted. If two samples fail, the entire lot will be rejected.

If one sample fails to meet any or all specifications, an additional 13 samples will be randomly selected and tested. if there are no additional failures (a total of one failure in 26 samples), the entire delivery lot will be accepted (excluding the one failed unit). If there is one additional failure (a total of 2 failures in 26 samples), the entire delivery lot will be rejected.

6.3 Physical Inspection Test

A physical inspection test will be conducted for determination of major physical defects. Major physical defects are those which render the lamp inoperative or which would cause the lamp to give unquestionably poor service. Physical inspection defects shall include broken internal welds on the arc tube support, broken electrodes, and loose mogul screw base. The electrode tip shall not deviate more than 3 degrees from the base axis (apex at base eyelet).

6.4 Electrical Characteristics and Lumen Output Tests

The test lamps will be the same lamps selected for the physical inspection test. The test lamps will be seasoned for 100 hours before they are tested for characteristics and lumens. In addition, the lamps will be measured after the lamp stabilizes (typically about 20 minutes or more).

An electrical characteristic failure shall be defined as a failure of a lamp to meet the lamp voltage requirements shown in Figure 1. A lumen output failure shall occur when the lumens of a lamp fall below 85% of the initial lumens listed in Figure 3.

A rejection of the delivery lot shall occur when failures from the physical inspection (Para. 6.3) and/or the electrical characteristics and lumen tests (Para. 6.4) exceed the allowable failure criteria shown in Figure 2.

7.0 PREPARATION FOR DELIVERY

7.1 Container Identification

Each shipping container shall be marked to identify the commodity, the manufacturer, lamp type, wattage, and purchase order number.

7.2 Shipping

Shipping instructions shall be as described on the Invitation for Bid.

8.0 GENERAL

8.1 Test Costs

If the delivery lot is rejected, the test sample lamps will not be returned to the supplier. The remainder of the lamps will be returned to the supplier. The supplier shall bear all shipping charges for the rejected lot. The supplier shall bear all costs for the testing of any re-submitted lot of lamps.

FIGURE 1

ELECTRICAL CHARACTERISTICS

			Rated Lamp Watts						
			70	100	150	200	250	310	400
Characteristic Voltage[1]	Design Center	Nominal	52	55	55	100	100	100	100
	Lamp Volts, rms	Minimum	44	45	48	85	85	85	85
		Maximum	60	62	62	115	115	115	115
Lamp Current, amperes, rms		Nominal	1.6	2.1	3.2	2.4	3.0	3.6	4.7

Note 1: After 100 hours burning (seasoning)

FIGURE 2

REJECTION OF LOT

Lot Size	Sample	Sample Size	Cumulative Sample Size	Failure Criteria	
				Accept	Reject
501 to 1200	First Second	13 13	13 26	0 1	2 2
1201 to 3200	First Second	20 20	20 40	0 3	3 4
3201 to 10000	First Second	20 20	20 40	0 3	3 4
10001 to 35000	First Second	32 32	32 64	1 4	4 5

FIGURE 3

INITIAL LUMENS

Lamp Watts	Initial Lumens
70	5800
100	9500
150/55	16000
200	22000
250	27500
310	37000
400	50000

DEPARTMENT OF TRANSPORTATION
ENGINEERING SERVICE CENTER
TRANSPORTATION LABORATORY
P. O. Box 19128
Sacramento, California 95819

California Test 610
July 1995

METHOD OF TEST FOR EXPECTED LIFE PERFORMANCE AND LUMENS OF HPS LAMPS

CAUTION: Prior to handling test materials, performing equipment setups, and/or conducting this method, testers are required to read **"SAFETY AND HEALTH"** in Section E of this method. It is the responsibility of whoever uses this method to consult and use departmental safety and health practices and determine the applicability of regulatory limitations before any testing is performed. Users of this method do so at their own risk.

A. SCOPE

The object of this test is to determine Lumen Output and lamp voltage requirements as shown in Appendix Figure 1.

B. APPARATUS: TYPICAL

1. YEW Yokogawa Digital Power Factor Meter, Model 2524.
2. Magtrol Power Analyzer, Model 4612.
3. Tektronix Oscilloscope Model, 2465.
4. Fluke Digital Multimeter, Models 8050A, 8060A and 8600A.
5. Sylvania variable linear reactor (Type 20758).
6. One Powerstat Variable Autotransformer, 10 Amp.
8. 1.5 m Photometric Sphere.

C. TEST PROCEDURE

a) Stabilized Lamp Operation

1. Connect the primary and secondary leads from the test set-up to the primary and secondary connection points on the ballast under test (See Figure 1). Estimate the approximate current and voltage and set the meter ranges accordingly.
2. Determine input voltage required. If 120 volts is needed, bypass the Westinghouse Transformer (See Figure 4, Power Control Board) by setting S1 and S2 to 120 volts. When 216 volts to 528 volts is needed, the Westinghouse Transformer should be used by setting S1 to primary, S2 to secondary and S3 to 208 volt input. The power cord input should be inserted in 120 volt receptacle for 120 volt testing and in the 208 volt receptacle for voltages above 216.
3. Turn MAIN POWER breaker ON.
4. Turn Magtrol and YEW Yokogawa Meter POWER SWITCHES ON.
5. Determine that meter protection switches are off before turning POWER VARIAC ON. These include the primary side voltmeter and ammeter and the secondary side voltmeter and ammeter. The meters must be protected because a HPS lamp needs a 2500 volt pulse

to start. The testing of starters will not be covered in this Test Method.

6. Turn POWER VARIAC SWITCH ON and adjust the variac to the specified ballast input voltage. METER SWITCHES can be turned ON after the test lamp ignites.

7. Allow lamp to stabilize (approximately 20 minutes) before recording input and output parameters on the HPS Lamp Testing form (See Figure 2). Input current, watts are measured on the YEW. Yokogawa Digital Power Factor Meter, Model 2524. The output voltage, current and watts are measured on the Magtrol Analyzer, Model 4612.

b) Dynamic Lamp Operation

The arc voltage of a high-pressure sodium lamp depends upon the operating temperature of the cold spot because the sodium-amalgam content is fully vaporized. When the lamp wattage is changed, by varying the line voltage or ballast impedance, the lamp voltage also changes and a plot of these wattage and voltage values defines the **Lamp Characteristic Curve.** The "minimum lamp voltage" curve of figure 6 is such a lamp characteristic curve. The voltage value at which a lamp characteristic curve crosses the 200-watt level is designated as its **Lamp Characteristic Voltage.** When a lamp operates for a ballast that is being held at constant input voltage and constant impedance, any changes in the lamp voltage result in wattage changes. These changes follow the **Ballast Characteristic Curve** for the specific input voltage at which the ballast is operating. Throughout the lifetime of a lamp, the ballast curve shall fall within the lamp voltage and wattage limits specified in figure 6.

1. The lamp manufacturers have established a range of limits within which the HPS lamps must be maintained over the lamp life, to achieve published lamp performance (See Figure 5). The volt-watt trace is recorded as the lamp warms up to its stabilization temperature. To duplicate further aging of the lamp (1.2 lamp volt rise per 1000 burning hours) the temperature at the cold spot is increased. The volt-watt trace passes thru the trapezoid until the lamp extinguishes at the end of lamp life. Increasing the spot temperature is accomplished by placing the lamp in an aluminum reflector oven with a Quartz Halogen lamp.

2. After the lamps have been seasoned for 100 hours they shall be tested for the electrical characteristics of lamp voltage shown in Figure 7. These characteristics apply to bare lamps operating in horizontal position, in an ambient temperature of 25 °C ± 5 °C, on a 60 Hz sinusoidal power supply. Measurements are made after the lamp stabilizes (typically about 20 minutes or more).

3. The lumens are measured at nominal lamp wattage after the lamp stabilizes. The testing shall be conducted under the same test conditions discussed in (2) above. The lumens of each lamp tested shall not fall below 85% of the initial lumens listed in Figure 8.

D. ELECTRICAL CHARACTERISTICS AND LUMEN OUTPUT TESTS AND RESULTS

The test lamps will be the same lamps selected for the physical inspection test. The test lamps will be seasoned for 100 hours before they are tested for characteristics and lumens. In addition, the lamps will be measured after the lamp stabilizes (typically about 20 minutes or more). An electrical characteristic failure shall be defined as a failure of a lamp to meet the lamp voltage requirements shown in Figure 7. A lumen output failure shall occur when the lumens of a lamp fall below 85% of the initial lumens listed in Figure 3.

E. SAFETY AND HEALTH

Prior to handling, testing or disposing of any materials, testers are required to read Caltrans Laboratory Safety Manual-Part A, Section 5.0, Hazards and Employee Exposure; Part B, Sections: 5.0, Safe Practices; 6.0, Chemical Procurement Distribution and Storage; and 10.0, Personal Protective Apparel and Equipment; and Part C, Section 1.0; Safe Laboratory Practices.

End of Test (10 Pages) on California Test 610

F. APPENDIX

Figure 1. Simplified Ballast Test Setup. - Page 4.
Figure 2. Forms for recording parameters at lamp stabilization. - Page 4.
Figure 3. Test Equipment Layout for Ballast Testing. - Page 5.
Figure 4. Input Power Control Board. - Page 6.
Figure 5. Trapezoid Limits as defined by ANSI. - Page 7.
Figure 6. Lamp Voltage-Wattage limits. - Page 8.
Figure 7. Electrical Charactreristics of HPS lamps. - Page 9.
Figure 8. Initial Lumens of HPS lamps. - Page 10.

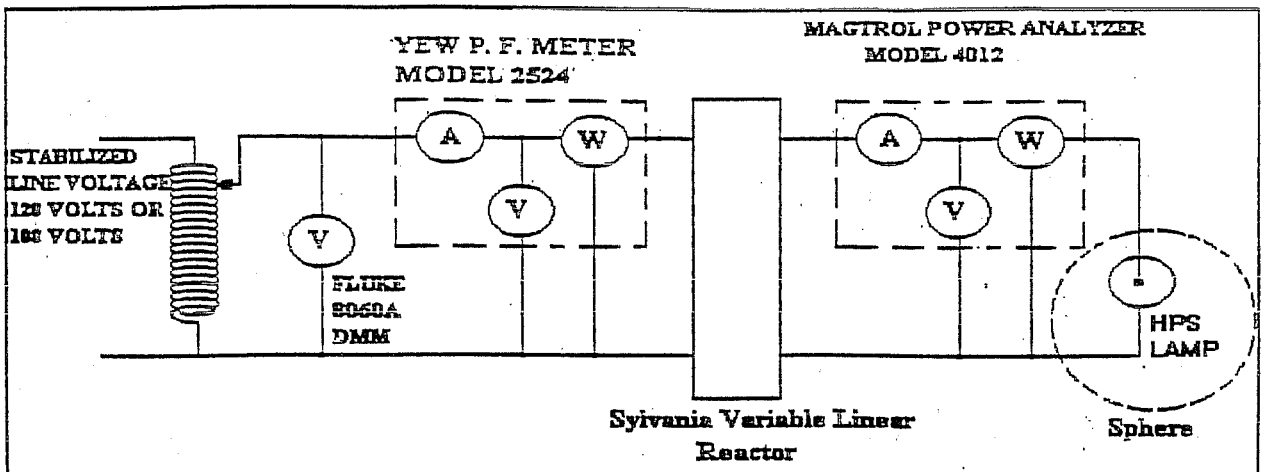

SIMPLIFIED BALLAST TEST SET-UP

FIGURE 1.

H. P. S. LAMP TESTING

RATED LUMENS:
LAMP WATTS:
CAT. NO.:
SPHERE CAL. FACTOR:

SM. NO.:
MFG.:
LOT NO.:
DATE:

INPUT				OUTPUT			
SR. NO.	INPUT VOLTS	INPUT CURRENT	INPUT WATTS	LAMP VOLTS (Vo)	OUTPUT WATTS (Wo)	MICRO AMPS	LUMENS (m. amps x S.C.F.)
1.							
2.							
3.							
4.							
5.							
6.							
7.							
8.							
9.							
10.							

FORMS FOR RECORDING PARAMETERS AT LAMP STABILIZATION
FIGURE 2.

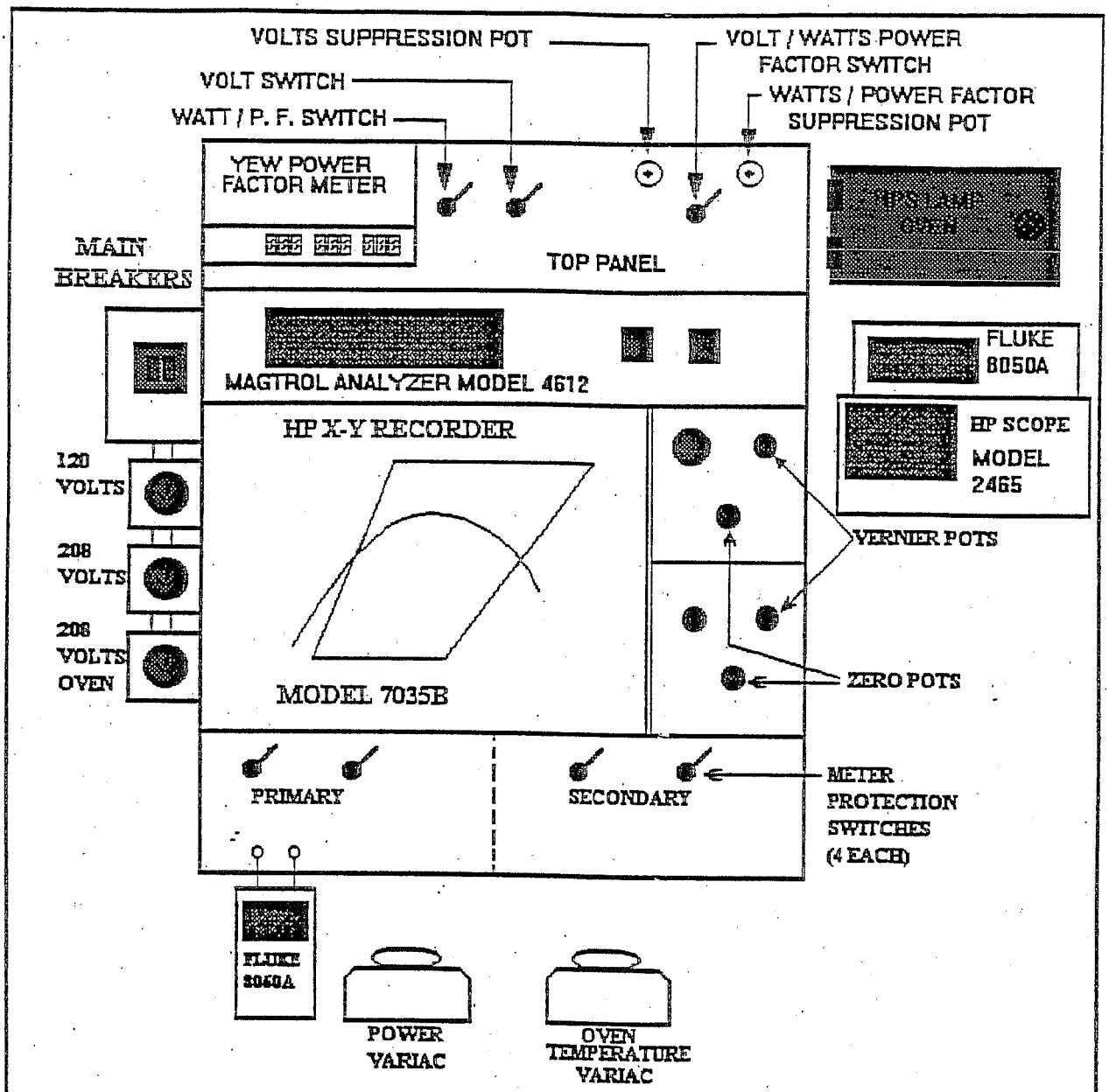

Test Equipment Layout for Ballast Testing

Figure 3.

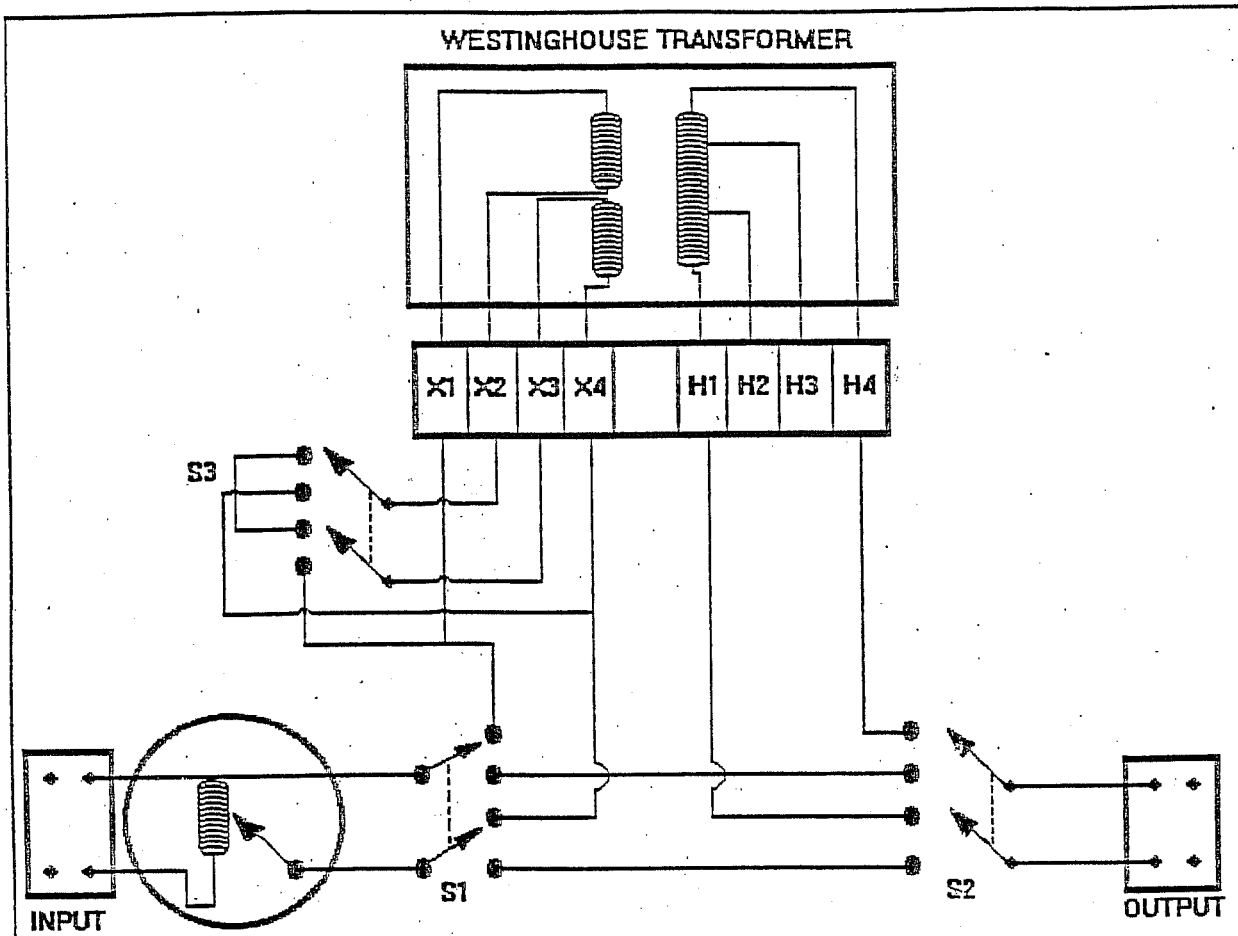

120 / 208 ⟶ 120 / 240 / 480

1) To bypass transformer: set "S1" & "S2" to 120 volts

2) To use transformer: set "S1" to primary
set "S2" to secondary
set "S3" to proper input

Input Power Control Board
Figure 4.

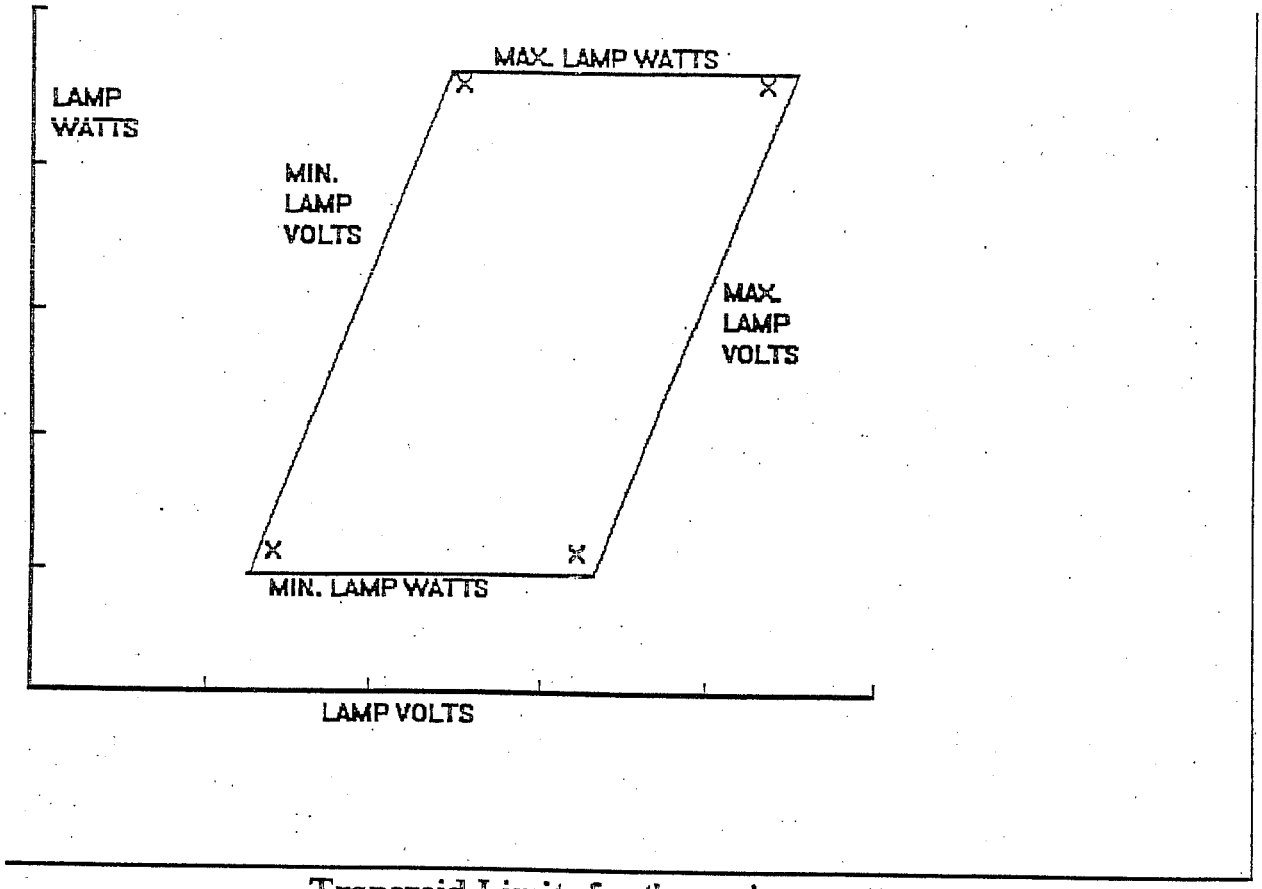

Trapezoid Limits for the various wattages

Rated Lamp Watts	50	70	100	150	200	250	310	400	1000
Min. Watts	38	50	72	110	140	175	210	280	750
Max. Watts	65	90	124	180	260	350	390	490	1200
Min. Volts	46	44	45	48	90	85	90	84	210
Max. Volts	84	84	84	85	160	160	160	152	350
Lamp Voltage Limits to establish the corners of trapezoid (At X Points)									
for Corners of Trapezoid									
At Max. Watts	55/99	50/104	51/96	54/97	105/200	109/194	105/186	97/172	235/390
At Min. Watts	39/72	38/64	38/71	40/69	75/120	67/134	71/128	67/125	175/300

Trapezoid Limits as defined by ANSI

Figure 5.

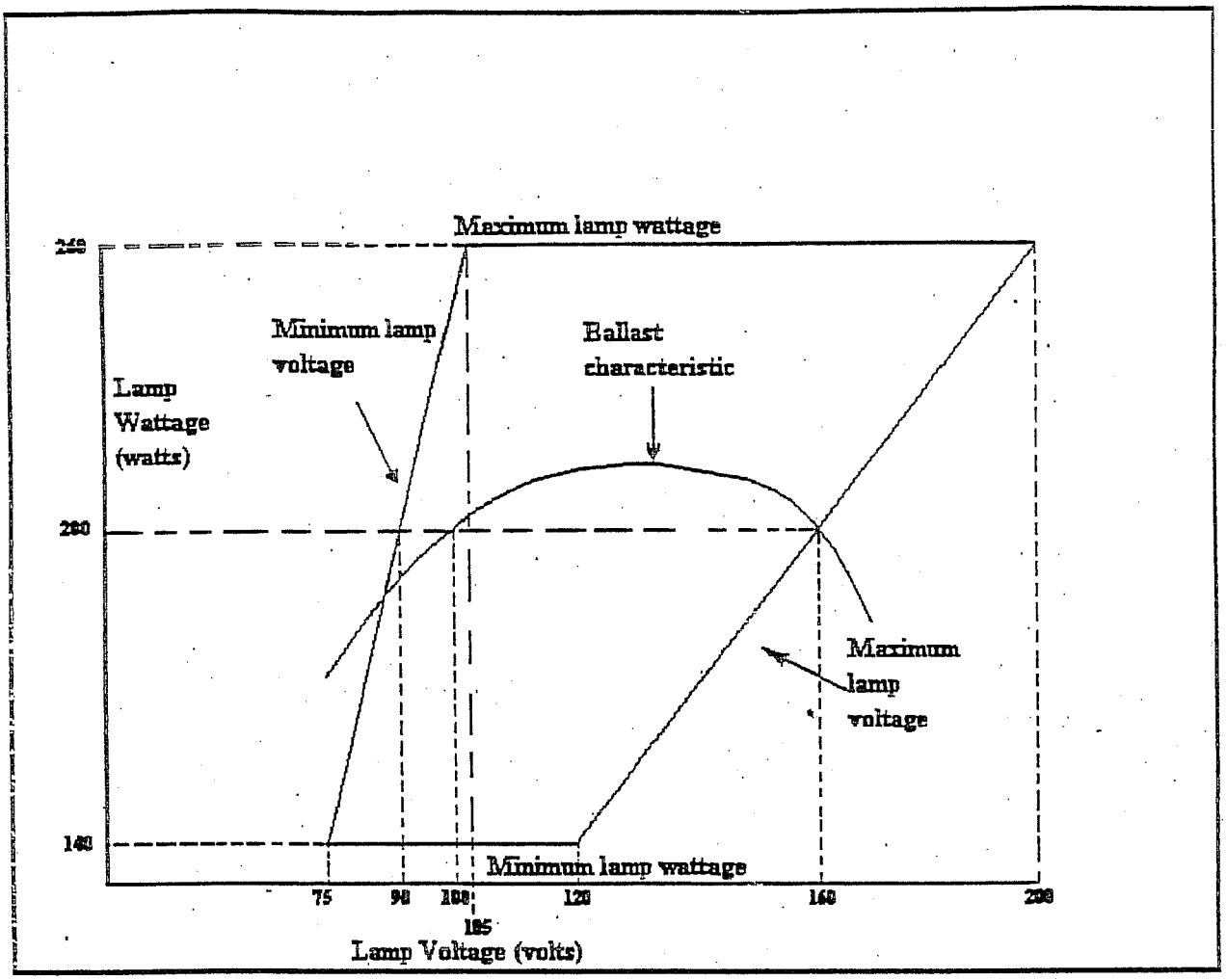

Figure 6. - Lamp voltage - Wattage limits

			Rated Lamp Watts						
			70	100	150	200	250	310	400
Characteristic Voltage[1]	Design Center	Nominal	52	55	55	100	100	100	100
	Lamp Volts, rms	Minimum	44	45	48	85	85	85	85
		Maximum	60	62	62	115	115	115	115
Lamp Current, amperes, rms Nominal			1.6	2.1	3.2	2.4	3.0	3.6	4.7

Note 1: After 100 hours burning (seasoning)

ELECTRICAL CHARACTERISTICS

FIGURE 7.

Figure 8.

INITIAL LUMENS

Lamp Watts	Initial Lumens
70	5800
100	9500
150/55	16000
200	22000
250	27500
310	37000
400	50000

STATE OF CALIFORNIA SPECIFICATION

PALLETS, WOODEN

1 SCOPE

This specification covers pallets intended for use with low lift pallet trucks or forklift trucks.

2 SPECIFICATION AND STANDARDS

Specifications and standards referenced in this document in effect on the opening of the Invitation for Bid form a part of this specification where referenced.

3 REQUIREMENTS

3.1 Material

The pallets shall be constructed from nominal size standard or better (West Coast Lumber Inspection Bureau, Standard Grading Rules for West Coast Lumber) grade Douglas Fir, Hemlock, Larch or Hem-Fir. The stringers shall be S4S and the decking S4S or S1S2E (re-

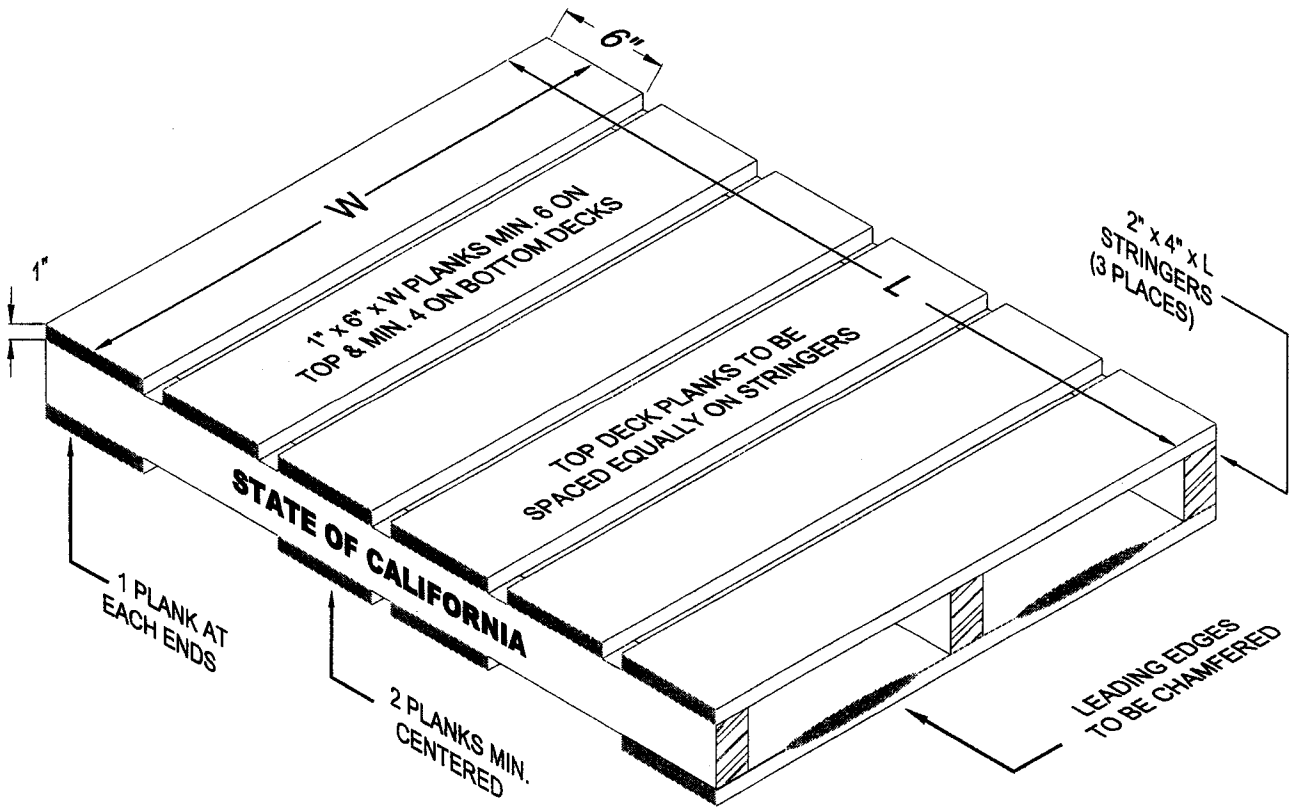

FIG. 1 - TYPE 2 WOODEN PALLET

sawed) with no edge knots. Sawed side is to be assembled to the inside of the pallets. Fastening shall be accomplished with 2¼ inch (+1/16 inch) 7 penny flat head drive screws (helical threaded nail) or 2¼ (+1/16 inch) #10 wire gauge annular ring nails as recommended in Specifications and Grades for Warehouse. Permanent or Returnable Pallets of West Coast Woods as published by the National Wooden Pallet and Container Association (Specifications and Grades, NWPCA).

3.2 Non-Standard Duty-Cycle Pallets

When specifically requested by the user, pallets may be manufactured using pine, oak or ash woods.

3.3 Construction

Pallet type and construction shall comply with Specifications and Grades, NWPCA. The pallets shall be Grade "Quality" (QAL).

The decking shall be secured with 3 nails or screws at each surface of contact with the stringer. Nails shall not be within ½ inch of deck-board edges or another nails.

All leading and outside edges of the bottom deck shall be chamfered. The chamfers shall be at least 12 inches long and shall be cut on an approximate 35 degree angle to the face so as to leave an edge adjacent to the chamfer not less than ¼ inch nor more than ½ inch from the outer

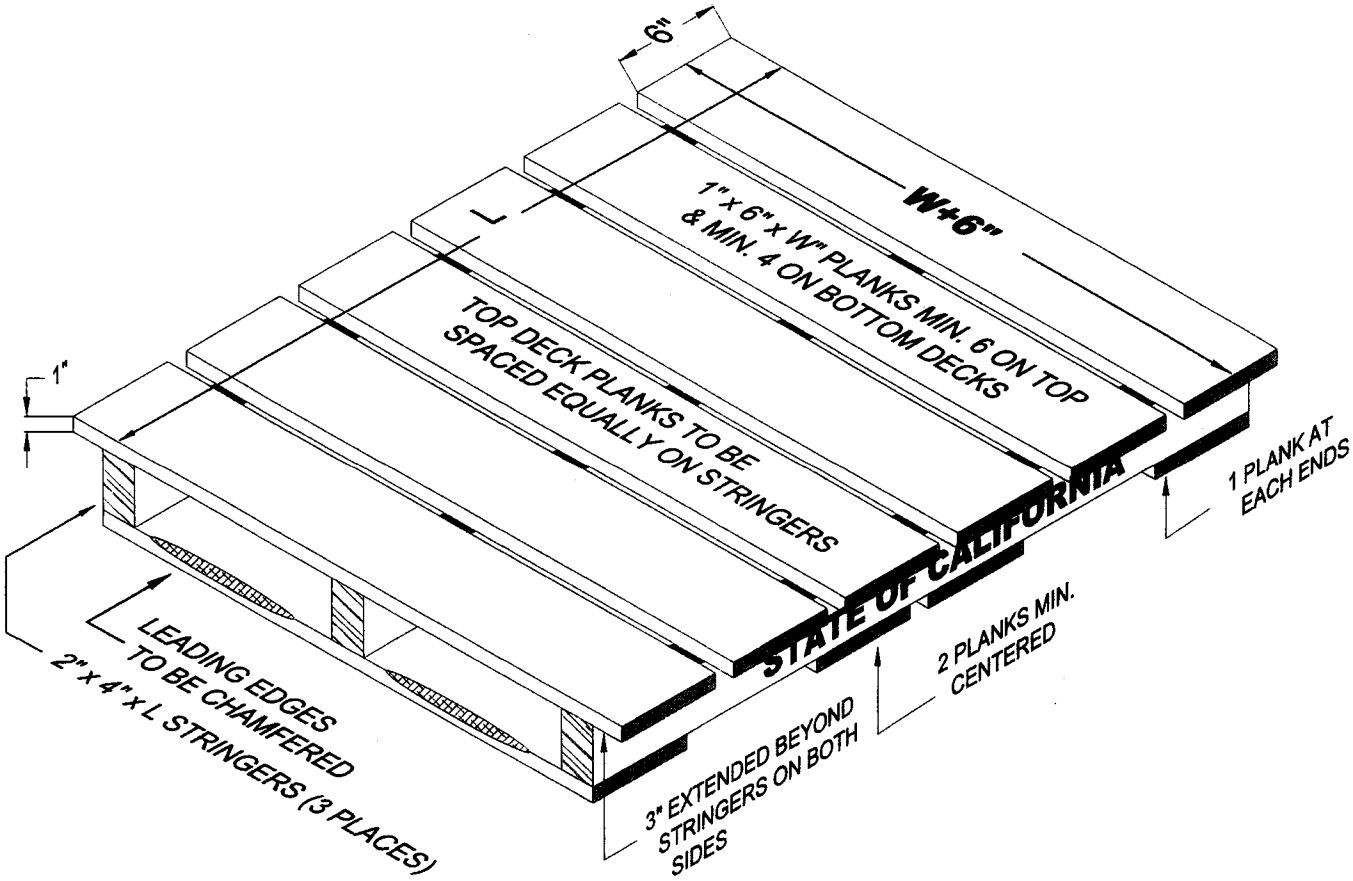

FIG. 2 - TYPE 4
SINGLE WING WOODEN PALLET

edge of the deck-board. The chamfer shall extend to within 3 inches of the stringers. Pallet configuration shall comply with table below.

COMMONLY USED PALLET TYPES & SIZE			
SIZE	**TYPE**	**TOP DECK**	**BOTTOM DECK**
1	**2** (Fig. 1)	42"L x 36"W Six 1" x 6" x 36" deck-boards, spaced evenly along the pallet width	42"L x 36"W Min. Four 1" x 6" x 36" boards. One placed each end of the stingers Two at center of the stringers
2	**2** (Fig. 1)	42"L x 42"W Six 1" x 6" x 42" deck-boards, spaced evenly along the pallet width	42"L x 42"W Min. Four 1" x 6" x 42" boards. One placed each end of the stingers Two at center of the stringers
3	**2** (Fig. 1)	44"L x 44"W Six 1" x 6" x 44" deck-boards, spaced evenly along the pallet width	44"L x 44"W Min. Four 1" x 6" x 44" boards. One placed each end of the stingers Two at center of the stringers(Fig. 1)
4	**2** (Fig. 1)	45"L x 36"W Six 1" x 6" x 36" deck-boards, spaced evenly along the pallet width	45"L x 36"W Min. Four 1" x 6" x 36" boards. One placed each end of the stingers Two at center of the stringers
5	**2** (Fig. 1)	46"L x 44"W Six 1" x 6" x 44" deck-boards, spaced evenly along the pallet width	46"L x 44"W Min. Four 1" x 6" x 44" boards. One placed each end of the stingers Two at center of the stringers
6	**2** (Fig. 1)	48"L x 48"W Six 1" x 6" x 48" deck-boards, spaced evenly along the pallet width	48"L x 48"W Min. Four 1" x 6" x 48" boards. One placed each end of the stingers Two at center of the stringers
Note: SIZE 1, TYPE 4 - has a single wing applied to top deck.			
1	**4 (Fig. 2)**	42"L x 36"W Six 1" x 6" x 36" deck-boards, spaced evenly along the pallet width with 3" wings extending beyond the stringers outboard faces	42"L x 30"W Min. Four 1" x 6" x 36" boards. One placed each end of the stingers, Two at center of the stringers

4 SAMPLING AND INSPECTION

This commodity will be sampled and inspected for compliance to this specification as deemed necessary. Sampling and inspection by attributes will be in accordance with ANSI/ASQ Z1.4 1993, Sampling Procedures and Tables for Inspection by Attributes. An inspection lot is defined as one delivery to one agency at one time.

4.1 Workmanship

The pallets shall be free from defects as outlined under Grade "Quality" (QAL) in the "Specifications and Grades", NWPCA.

5 MARKING

Each pallet shall be marked (two places), **"STATE OF CALIFORNIA"**. Marking shall be easily readable, in black letters and on outboard faces of stringers.