C A L I F O R N I A

Access Compliance Reference Manual

Statutes, Title 24 Regulations, Policies, & Official Comments

THE OFFICIAL GUIDE

State of California • Department of General Services
DIVISION OF THE STATE ARCHITECT

CODE CHANGE OR ERRATA NO.	DESCRIPTION	EFFECTIVE DATE

This is a log sheet for your record keeping

California Access Compliance Reference Manual

A Resource of Access Requirements

January 21, 2003

Division of the State Architect
Access Compliance
1130 'K' Street, Suite 101
Sacramento, CA 95814

Voice (916) 322-4700
Fax (916) 327-3371

Web Site: http://www.dsa.ca.gov

Electronic address: Michael.Mankin@dgs.ca.gov

Division of the State Architect
Stephan Castellanos, FAIA
State Architect

Access Compliance
Reference Manual, Volume 2
(Policies, Interpretive Regulations, Desktop Manual)

Office of Universal Design
Michael J. Mankin, AIA
Chief

Production & Coordinating Staff
Aaron P. Noble, Andreas P. Michael, Rod Higgins,
David Ehret, Elizabeth Randolph, Linda Huber

Division of the State Architect
Office of Universal Design
1130 K Street, Suite 101
Sacramento, CA 95814
(916) 445-8100

Copies of this manual are also available at the following website:
http://www.dsa.dgs.ca.gov/UniversalDesign/ud_accessmanual.htm

For alternate format, please call (916) 322-4700

Developed, Prepared and Edited by Jürgen Dostert, Access Specialist,
Sally Swanson Associates

 © 2003 DSA/OUD

F O R E W O R D

To our colleagues:

Access Compliance has put the statutes and regulations contained in this publication together for your convenience. We hope that this book of regulations and statutes together will help clarify the obligations for architectural accessibility in California.

While reading the statutes, keep in mind that these are only a partial listing of the statutory sections, and are included here because of their important role in setting forth the legislative ambition to provide and maintain an access code. Such statutes promulgate building regulations by a formal public consensus process, and are designed to carry out the intent of the legislature. Therefore, compliance with both statutes and regulations are necessary for complete implementation of the scheme for access in California.

When the statutes indicate a performance obligation and the regulations are not sufficiently prescriptive, or where the regulations themselves are not clearly specific, remember that the overall solution should recognize the intent of statute. In other words, performance obligations set out in the statutes should be given due consideration, and the general trend is that a liberal application of the regulations should be taken to effect the purpose of statute.

In carrying out jurisdictional plan checking and field inspection responsibilities for state projects, the Division of the State Architect (DSA) has adopted policies in collaboration with the public for enforcement purposes. These policies are available for reference in this publication with a checklist to be used as a companion to the code.

The scheme for access in California has been enhanced by the incorporation of more restrictive building standards of the federal Americans with Disabilities Act as well as the Fair Housing Amendments Act into the California access code. However, state and federal civil rights issues and other non-building code laws (i.e., employment, equal opportunities to programs, etc.) are separate issues that need to be examined independent of, and in addition to, the resources presented in this publication.

Selected California Accessibility Statutes

TABLE OF CONTENTS
SELECTED CALIFORNIA ACCESSIBILITY STATUTES

1. PUBLIC BUILDINGS AND FACILITIES — Page

A. Access to Public Buildings by Physically Handicapped Persons
(Government Code §4450-§4460) 3

B. Access to Rapid Transit Equipment or Structures
(Government Code §4500) 8

C. Facilities for Handicapped Persons
(Government Code §7250-§7252) 9

D. Approvals
(Education Code §17280-§17319) 10

E. Fitness for Occupancy
(Education Code §17365-§17374) 27

F. State-Funded Services
(Education Code §67310) 30

G. Approval
(Education Code §81130-§81149) 31

2. PRIVATELY FUNDED BUILDINGS AND FACILITIES

A. Access to Places of Public Amusement and Resort by Physically Handicapped Persons
(Health and Safety Code §19952-§19954.5) 40

B. Access to Public Accommodations by Physically Handicapped Persons
(Health and Safety Code §19955-§19959) 41

C. Double Doors
(Health and Safety Code §13011) 44

3. PARKING PRIVILEGES

A. Special Plates
(Vehicle Code §5007) 45

B. Offenses Relating To Traffic Devices
(Vehicle Code §21458) 46

C. Stopping, Standing, and Parking
(Vehicle Code §22500-§22522) 47

4. CIVIL RIGHTS AND NON-DISCRIMINATION

A. Blind and Other Physically Disabled Persons
(Civil Code 51-55.1, §1360-§1361) 56
(Evidence Code §754 & §754.5) 68

B. Discrimination
(Government Code §11135-§11139.5, §12955-§12956, §19230-§19237) 70

C. Discrimination by Licensed Professionals
(Business and Professions Code §125.6) 78
(Insurance Code §10144-10145) 79

5. STATE HISTORIC BUILDING CODE
(Health and Safety Code §18950-18961) 81

6. POLLING PLACES
(Elections Code §225-§228, §1638.5, §10010.2, §14234) 86

7. RECREATION

A. Public Playground Equipment
(Public Resources Code §5410-§5411, 65720) 87

8. MEETINGS
(Government Code §54950-§54962, §11120-§11132) 88

9. RULEMAKING
(Health and Safety Code §18901-§18949.31) 127

10. FACTORY BUILT HOUSING
(Health and Safety Code §19960-§19997) 158

11. EMPLOYEE HOUSING ACT
(Health and Safety Code §17000-§17060) 165

12. REGULATION OF BUILDINGS USED FOR HUMAN HABITATION
(Health and Safety Code §17910-§17990) 188

1. PUBLIC BUILDINGS AND FACILITIES

A. ACCESS TO PUBLIC BUILDINGS BY PHYSICALLY HANDICAPPED PERSONS

Government Code

§4450	Purpose of chapter; standards for access to buildings; regulations
§4450.5	State architect's regulations, identification of parking spaces for handicapped
§4451	Buildings and facilities to which chapter applicable; standards and specifications; exceptions
§4452	Minimum standards; deviations from specifications
§4453	Responsibility for enforcement of chapter
§4453.5	Inspection of state and school district buildings by physically disabled volunteers; reports; correction plan; applicability of section
§4454	Approval of plans and specifications; filing fees; consultation
§4455	Duties of Department of Rehabilitation
§4455.5	Elevators; Braille symbols
§4456	Alteration of existing buildings or facilities
§4457	Portable buildings of school district
§4458	Violations; injunctions; district or city attorney, attorney general
§4459	Accessibility requirements; use of fees
§4460	Detectable warning products and directional surfaces; approval

§4450 Purpose of chapter; standards for access to buildings; regulations

(a) It is the purpose of this chapter to ensure that all buildings, structures, sidewalks, curbs, and related facilities, constructed in this state by the use of state, county, or municipal funds, or the funds of any political subdivision of the state shall be accessible to and usable by persons with disabilities. The State Architect shall develop and submit proposed building standards to the California Building Standards Commission for approval and adoption pursuant to Chapter 4 (commencing with Section 18935) of Part 2.5 of Division 13 of the Health and Safety Code and shall develop other regulations for making buildings, structures, sidewalks, curbs, and related facilities accessible to and usable by persons with disabilities. The regulations and building standards relating to access for persons with disabilities shall be consistent with the standards for buildings and structures which are contained in pertinent provisions of the latest edition of the Uniform Building Code, as adopted by the International Conference of Building Officials, and these regulations and building standards shall contain additional requirements relating to buildings, structures, sidewalks, curbs, and other related facilities as the State Architect determines are necessary to assure access and usability for persons with Disabilities. In developing and revising these additional requirements, the State Architect shall consult with the Department of Rehabilitation, the League of California Cities, the County Super-visors Association of California, and at least one private organization representing and comprised of persons with disabilities.

(b) However, in no case shall the State Architect's regulations and building standards prescribe a lesser standard of accessibility or usability than provided by the Accessibility Guidelines prepared by the federal Access Board as adopted by the United States Department of Justice to implement the Americans with Disabilities Act of 1990 (Public Law 101-336).

(Added by Stats.1968, c. 261 §1. Amended by Stats.1971, c. 1301 §1; Stats.1974, c. 995 §1; Stats.1975, c. 1150 §1, effective September 29, 1975; Stats.1979, c. 1152 §10; Stats.1992, c. 913 (A.B. 1077) §16; Stats.1993, c. 1214 (A.B. 551) §4; Stats.1993, c. 1220 (A.B. 1138) §1.)

§4450.5 State architect's regulations, identification of parking spaces for handicapped

The State Architect's regulations adopted pursuant to Section 4450 shall require that all parking spaces reserved for the handicapped be identified as prescribed by Sections 22511.7 and 22511.8 of the Vehicle Code.

(Added by Stats.1984, c. 484 §1.)

§4451 Buildings and facilities to which chapter applicable; standards and specifications; exceptions

(a) Except as otherwise provided in this section, this chapter shall be limited in its application to all buildings and facilities stated in Section 4450 intended for use by the public, with any reasonable availability to, or usage by, persons with disabilities, including all facilities used for education and instruction, including the University of California, the California State University, and the various community college districts, that are constructed in whole or in part by the use of state, county, or municipal funds, or the funds of any political subdivision of the state.

(b) When required by federal or state law, buildings, structures, and facilities, or portions thereof, that are leased, rented, contracted, sublet, or hired by any municipal, county, or state division of government, or special district shall be made accessible to, and usable by, persons with disabilities.

(c) Except as otherwise provided by law, buildings, structures, sidewalks, curbs, and related facilities subject to the provisions of this chapter or Part 5.5 (commencing with Section 19955) of Division 13 of the Health and Safety Code shall conform to the building standards published in the California Building Standards Code relating to access for the persons with disabilities and the other regulations adopted pursuant to Section 4450 that are in effect on the date of an application for a building permit. With respect to buildings, structures, sidewalks, curbs, and related facilities not requiring a building permit, building standards published in the California Building Standards Code relating to access for persons with disabilities and other regulations adopted pursuant to Section 4450, and in effect at the time construction is commenced shall be applicable.

(d) Until building standards are published in the California Building Standards Code and other regulations are developed by the State Architect and adopted by the California Building Standards Commission pursuant to Section 4450, buildings, structures, sidewalks, curbs, and related facilities subject to the provisions of this chapter or Part 5.5 (commencing with Section 19955) of Division 13 of the Health and Safety Code shall meet or exceed the requirements of Title III of Subpart D of the federal Americans with Disabilities Act of 1990.

(e) This chapter shall apply to temporary or emergency construction as well as permanent buildings.

(f) Administrative authorities, as designated under Section 4453, may grant exceptions from the literal requirements of the building standards published in the California Building Standards Code relating to access for persons with disabilities, or the other regulations adopted pursuant to this section, or permit the use of other methods or materials, but only when it is clearly evident that equivalent facilitation and protection that meets or exceeds the requirements under federal law are thereby secured.

(g) The Department of General Services shall develop, as appropriate, regulations to ensure that Braille, tactile, or visual signage for elevators, rooms, spaces, functions, and directional information is installed as required by Section 4450 and shall develop and implement an effective training program to ensure compliance with all disability access requirements.

(Added by Stats.1968, c. 261 §1. Amended by Stats.1971, c. 1301 §2; Stats.1974, c. 995 §2; Stats.1975, c. 1150 §2, effective September 29, 1975; Stats.1979, c. 1152 §11; Stats.1983, c. 143 §183; Stats.1993, c. 1220 §2. Amended by Stats.2000, c. 989 (S.B. 1242), §2.)

§4452 Minimum standards; deviations from specifications

It is the intent of the Legislature that the building standards published in the State Building Standards Code relating to access by the physically handicapped and the other regulations adopted by the State Architect pursuant to Section 4450 shall be used as minimum requirements to insure that buildings, structures and related facilities covered by this chapter are accessible to, and functional for, the physically handicapped to, through, and within their doors, without loss of function, space, or facility where the general public is concerned.

Any unauthorized deviation from such regulations or building standards shall be rectified by full compliance within 90 days after discovery of the deviation.

(Added by Stats.1968, c. 261 §1. Amended by Stats.1971, c. 1301 §3; Stats.1974, c. 995 §3; Stats.1979, c. 1152 §12.)

§4453 Responsibility for enforcement of chapter
The responsibility for enforcement of this chapter shall be as follows:

(a) By the Director of the Department of General Services where state funds are utilized for any project or where funds of counties, municipalities, or other political subdivisions are utilized for the construction of elementary, secondary, or community college projects.

(b) By the governing bodies thereof where funds of counties, municipalities, or other political subdivisions are utilized except as otherwise provided in (a) above.

(Added by Stats.1968, c. 261 §1. Amended by Stats.1978, c. 326 §1.)

§4453.5 Inspection of state and school district buildings by physically disabled volunteers; reports; correction plan; applicability of section
(a) In addition to any other inspection requirements pertaining to building standards of state and school district buildings used by the public, the construction of which are under the jurisdiction of the Office of the State Architect in the Department of General Services, accessibility to persons with handicaps may be inspected pursuant to subdivision (b) in state and school district buildings used by the public in order to determine if the building meets minimum state standards for accessibility to handicapped persons.

(b) Inspection and approval may be made on a voluntary basis by one or more persons who have physical disabilities or who represent the interests of physically disabled persons, who are familiar with the California access laws and standards, and who have been chosen by the Department of Rehabilitation. The Department of Rehabilitation may assign these volunteers to inspect those state and school district buildings used by the public specified in subdivision (a). If the volunteer inspector finds that a building does not meet minimum state standards for accessibility to handicapped persons, the volunteer shall report this information to the Department of Rehabilitation, which shall in turn report the information to the school district if a school building is involved, to the owning agencies if a state building is involved, and to the Office of the State Architect. When, after receipt of this information, the Office of the State Architect confirms that the building does not meet minimal state standards for accessibility to handicapped persons, the Office of the State Architect shall develop a plan to be filed with the jurisdiction owning the building that addresses the correction of the identified deficiencies.

(c) The provisions of this section shall only pertain to state and school district buildings used by the public for which building plans have been filed with the Office of the State Architect on or after January 1, 1985.

(Added by Stats.1983, c. 1246 §2.)

§4454 Approval of plans and specifications; filing fees; consultation
Where state funds are utilized for any building or facility subject to this chapter, or where funds of counties, municipalities, or other political subdivisions are utilized for the construction of elementary school, secondary school, or community college buildings and facilities subject to this chapter, no contract shall be awarded until the Department of General Services has issued written approval stating that the plans and specifications comply with the intent of this chapter.

In each case the application for approval shall be accompanied by the plans and full, complete, and accurate specifications, which shall comply in every respect with any and all requirements prescribed by the Department of General Services.

The application shall be accompanied by a filing fee in amounts as determined by the Department of General Services. All fees shall be deposited into the Access for Handicapped Account, which account is hereby renamed the Disability Access Account as of July 1, 2001, and established in the General. Fund. Notwithstanding Section 13340, the account is continuously appropriated for expenditures for the use of the Department of General Services, in carrying out the department's responsibilities under this chapter. However, the expenditure of funds from the Disability Access Account for responsibilities prescribed in Section 4459 shall terminate on December 31, 2004.

The Department of General Services shall consult with the Department of Rehabilitation in identifying the requirements necessary to comply with this chapter.

The Department of General Services, Division of the State Architect, shall include the cost of carrying the responsibilities identified in this chapter as part of the plan review costs in determining fees.

(Added by Stats.1970, c. 701 §1. Amended by Stats.1978, c. 326 §2. Amended by Stats.2000, c. 989 (S.B. 1242), §3.)

§4455 Duties of Department of Rehabilitation

The Department of Rehabilitation shall be responsible for educating the public and working with officials of cities, counties, municipalities, and other political subdivisions, private architects, designers, planners, and other interested parties in order to encourage and help them make all buildings, facilities, and improved areas accessible to and usable by handicapped persons for purposes of rehabilitation, employment, business, recreation, and all other aspects of normal living.

(Added by Stats.1970, c. 701 §2.)

§4455.5 Elevators; Braille symbols

All new elevators in public buildings or facilities after the operative date of the act that amended this section during the first year of the 1979-80 Regular Session shall have Braille symbols and marked Arabic numerals corresponding to the numerals on the elevator buttons embossed immediately to the left thereof.

All new door casings on all elevator floors after the operative date of this section shall have the number of the floor on which the casing is located embossed in Braille symbols and marked Arabic numerals on both sides at a height of approximately 60 inches from the floor.

(Added by Stats.1971, c. 1368 §1. Amended by Stats.1979, c. 273 §1.)

§4456 Alteration of existing buildings or facilities Best practices, standards, and procedures

After the effective date of this section, any building or facility which would have been subject to this chapter but for the fact it was constructed prior to November 13, 1968, shall comply with the provisions of this chapter when alterations, structural repairs or additions are made to such building or facility. This requirement shall only apply to the area of specific alteration, structural repair or addition and shall not be construed to mean that the entire structure or facility is subject to this chapter.

(Added by Stats.1971, c. 1458 §1.)

§4457 Portable buildings of school district

On or after January 1, 1986, all portable buildings purchased, leased, or constructed by a school district shall meet the requirements of this chapter, except as provided in subdivision (f) of Section 4451.

(Added by Stats.1985, c. 550 §2.)

§4458 Violations; injunctions; district or city attorney, attorney general

The district attorney, the city attorney, or the Attorney General may bring an action to enjoin a violation of this chapter.

(Added by Stats.1976, c. 869 §2.)

§4459 Accessibility requirements; use of fees

(a) The State Architect shall develop amendments for building regulations and submit them to the California Building Standards Commission for adoption to ensure that no accessibility requirements of the California Building Standards Code shall be enhanced or diminished except as necessary for (1) retaining existing state regulations that provide greater accessibility and features, or (2) meeting federal minimum accessibility standards of the Federal Americans with Disabilities Act of 1990 as adopted by the United States Department of Justice, the Uniform Federal Accessibility Standards, and the federal Architectural Barriers Act.

(b) The Department of General Services shall use fees deposited in the Disability Access Account established in Section 4454 for the purposes identified in this chapter. The department shall include the cost of carrying out the responsibilities identified in this chapter as part of the plan review costs in determining fees.

(c) Notwithstanding any other provision of law, the application and scope of accessibility regulations in the California Building Standards Code shall not be less than the application and scope of accessibility requirements of the federal Americans with Disabilities Act of 1990 as adopted by the United States Department of Justice, the Uniform Federal Accessibility Standards, and the federal Architectural Barriers Act.

(Added by Stats.2000, c. 989 (S.B. 1242), §4.)

§4460 Detectable warning products and directional surfaces; approval

(a) The Legislature finds and declares that it is essential that detectable warning and directional surfaces comply with the California Building Standards Code in order to ensure that those products are adequate to meet the safety and accessibility needs of the blind and visually impaired.

(b) All detectable warning products and directional surfaces installed after January 1, 2001, shall be evaluated by an independent entity, selected by the Department of General Services, Division of the State Architect, in consultation with the Department of Housing and Community Development when the products and surfaces may be mandated for use in residential housing, that shall issue and register a two-year product approval, renewable upon reevaluation at two-year intervals thereafter. The approval shall include conformation with architectural standards published in the California Building Standards Code as well as durability criteria appropriate for the type of installation, established by the Department of General Services, Division of the State Architect, in consultation with the Department of Housing and Community Development when the products and surfaces may be mandated for use in residential housing.

The codes developed by the Department of General Services pursuant to this section shall ensure that shape, color fastness, confirmation, sound-on-cane acoustic quality, resilience, and attachment will not degrade significantly for at least five years. The Department of General Services, Division of the State Architect, shall impose fees to recover administrative and code development costs, as necessary, to develop standards and administer the registration and approval program. The fees shall be paid by manufacturers of detectable warning products and directional surfaces. All fees shall be deposited in the Access for Handicap Account created pursuant to Section 4454 and may be expended for costs incurred by the Department of General Services, Division of the State Architect, in performance of the requirements of this section.

As used in this section, “significant degradation” means that the product maintains at least 90 percent of its approved design characteristics. The Department of General Services may provide exceptions to this section for justifiable cause pursuant to Section 4451.

(c) The independent entity selected by the Department of General Services, Division of the State Architect, shall be recognized as having appropriate expertise in determining whether products governed by this section comply with the California Building Standards Code.

(Added by Stats.1999, c. 386 (A.B.685), §1.)

B. ACCESS TO RAPID TRANSIT EQUIPMENT OR STRUCTURES

Government Code

§4500 Contracts for rapid transit equipment or structures; ready access for individuals with disabilities

§4500 Contracts for rapid transit equipment or structures; ready access for individuals with disabilities

(a) Notwithstanding the provisions of any statute, rule, regulation, decision, or pronouncement to the contrary, other than subdivision (b), every state agency, board, and department, every local governmental subdivision, every district, every public and quasi-public corporation, every local public agency and public service corporation, and every city, county, city and county and municipal corporation, whether incorporated or not and whether chartered or not, in awarding contracts for operations, equipment, or structures shall be obligated to require that all fixed-route transit equipment and public transit structures shall be so built that individuals with disabilities shall have ready access to, from and in such equipment and structures.

(b) Notwithstanding any other provision of law, public transit facilities and operations, whether operated by or under contract with a public entity, shall meet the applicable standards of Titles II and III of the federal Americans with Disabilities Act of 1990 (Public Law 101-336) and the federal regulations adopted pursuant thereto, subject to the exceptions provided in that act. However, if the laws of this state in effect on December 31, 1992, prescribe higher standards than the Americans with Disabilities Act of 1990 (Public Law 101-336) and federal regulations adopted pursuant thereto, then those public transit facilities and operations shall meet the higher standards.

(Added Stats.1971, c. 444 §1. Amended by Stats.1992, c. 913 (A.B.1077) §17.

C. FACILITIES FOR HANDICAPPED PERSONS

Government Code

§7250 Application
§7251 Toilet facilities; signs
§7252 Level or ramp entrances; signs

§7250 Application

The provisions of this chapter apply to all buildings or other facilities owned, leased, operated or managed by the state, county, city and county, district, or other political subdivision and which are usually or regularly open to the members of the public.

(Added by Stats.1968, c. 937, p. 1787, §1.)

§7251 Toilet facilities; signs

When a building contains special toilet facilities usable by a person in a wheelchair or otherwise handicapped, a sign indicating the location of such facilities shall be posted in the building directory, in the main lobby, or at any entrance specially used by handicapped persons.

(Added by Stats.1968, c. 937, p.1788, §1.)

§7252 Level or ramp entrance; signs

When a building contains an entrance other than the main entrance, which is ramped or level for use by handicapped persons, a sign showing its location shall be posted at or near the main entrance which shall be visible from the adjacent public sidewalk or way.

(Added by Stats.1968, c. 937, p.1788, §1.)

D. APPROVALS

Education Code

§17280	Supervision of design, construction and fire damage repair by Department of General Services
§17280.5	Advisory committee convened by Seismic Safety Commission; study and report on developing regulatory process with respect to buildings not originally constructed in compliance with Field Act; retrofitting buildings; equivalent pupil safety performance standard
§17281	Short Title
§17282	Damage caused by natural disasters; repairs, alterations, or reconstruction; expedited review and approval process; time limitations
§17283	"School Building"
§17284	Nonconforming school building; extension of use
§17284.5	Non conforming existing private buildings; use as school buildings; extension of waivers
§17285	Leased nonconforming buildings
§17286	"School building"; exemption for certain facilities
§17287	"School building"; exclusion of buildings used for outdoor science, conservation, and forestry classes
§17288	Special educational services on university campuses; exemption from school building requirements; notice
§17289	Exemptions for facilities used for independent study; requirements; duration of exemption
§17290	Repealed
§17291	Owned relocatable facilities; waiver of provisions; extension; applicability
§17292	Use of owned or leased relocatable building as school building; conditions
§17292.5	Expelled pupils program; operation of program; lease agreements for facilities
§17293	Pregnant and parenting teen program; operation of new or expanded program; leases agreements for school facilities
§17293.5	Leasing of buildings on temporary basis for parenting and pregnant teen education programs; exemption of building from certain requirements
§17294	"Construction or alteration"
§17295	Required approval of plans by Department of General Services
§17296	School-based integrated children's services program facility; exemption
§17297	Required safety approval by Department of General Services before letting any contract
§17298	Fabrication, construction or alteration of relocatable school buildings with previous approval
§17299	Requirements of specifications, structural design computations and cost estimates with plans submitted for approval
§17300	Filing fees for submission of plans for approval; rates; installments
§17301	Public school planning, design, and construction review revolving fund; fees; audits
§17302	Preparers of plans, specifications, and estimates; qualifications; observation of construction
§17303	Plan review; complete application; methods to reduce time lapse; notice
§17304	Printing of plans; approval letter
§17305	Qualified plan review firms; contracts
§17306	Review of application; referral of documents to review firm
§17307	Compliance with the provisions of this article and approval of the Department of General Services
§17307.5	Construction work on public schools; issuance of stop work orders; liability
§17308	Legislative findings, employee training; interpretational materials
§17309	Reports required of architects, engineers, and inspectors; information required
§17310	Rules and regulations; building standards
§17311	Inspections by Department of General Services and appointed inspector
§17312	Violations and false statements

§17313 Structural inspection by Department of General Services upon special request; payment of expenses
§17314 Approval of public school building for occupancy by Department of General Services deemed to meet local building requirements for use as a private school
§17315 Certificate of compliance; verified reports
§17316 Contracts with structural engineers or architects; required provision making plans, specifications, and estimates, property of the school district
§17317 Seismic safety inventory of public school buildings; report
§17318 Repealed
§17319 Repealed

§17280 Supervision of design, construction and fire damage repair by Department of General Services

(a) (1) The Department of General Services under the police power of the state shall supervise the design and construction of any school building or the reconstruction or alteration of or addition to any school building, if not exempted under Section 17295, to ensure that plans and specifications comply with the rules and regulations adopted pursuant to this article and building standards published in Title 24 of the California Code of Regulations, and to ensure that the work of construction has been performed in accordance with the approved plans and specifications, for the protection of life and property. Nothing in this section shall be construed to allow a school district to perform work with its own forces in excess of the limitations set forth in Sections 17595 and 17599. In calculating the cost of any project of reconstruction or alteration of, or addition to, any school building for the purpose of determining the applicability of the rules and regulations adopted pursuant to this article and building standards published in Title 24 of the California Code of Regulations, the Department of General Services shall not include, as an element of that cost, any expenses of air-conditioning equipment or insulation materials for that building, or of installing the equipment or materials.

(2) In the alternative, for a leased or purchased building, a school district may comply with this section by complying with Section 17280.5

(b) Whenever repairs due to fire damage, not including any damage caused by wind or earthquake, must be made to any school building previously approved by the Department of General Services, the approved plans and specifications used in the original work under then existing rules, regulations, and building standards may be used without modification, providing all other provisions of this article are carried out.

(c) Notwithstanding any other provision of law, no school district shall be authorized to construct or reconstruct any school building, regardless of the source of funding, unless and until the governing board of the district, by resolution, has indicated the agreement of the district that any school building construction or reconstruction that exceeds those construction costs and allowable area standards or any allowable building area computed for an attendance area pursuant to Section 17041 shall, in the event of the district's subsequent application for state funding for school facility construction, be deducted from the allowable building area for which the district would otherwise have been eligible, which restriction shall not be subject to waiver or exception as otherwise may be provided by law.

(d) If it is determined that, for any reason, a school district failed to comply with the requirement of this section, the district shall not be eligible for any additional building area pursuant to Section 17049 and may be denied any time priority established for the particular project pursuant to Section 17016.

(Added by Stats.1996, c. 277 (S.B.1562), § 3, operative Jan. 1, 1998. Amended by Stats.1997, c. 390 (A.B.611), § 1, eff. Aug.27, 1997.)

§17280.5 Advisory committee convened by Seismic Safety Commission; study and report on developing regulatory process with respect to buildings not originally constructed in compliance with Field Act; retrofitting buildings; equivalent pupil safety performance standard

(a) The Seismic Safety Commission shall convene an advisory committee that shall include, but not be limited to, the State Architect, the State Fire Marshall, representatives from the major professional associations representing architects, engineers, and school facilities designers, and other interested parties.

(b) The advisory committee shall convene by August 19, 2002, and shall study and report on whether a regulatory process may be developed that will allow the State Architect to determine whether a building not originally constructed in compliance with the Field Act, as defined in Section 17281, and its implementing regulations either meets, or can be retrofitted to meet, the equivalent pupil safety performance standard as a building constructed according to the Field Act and its implementing regulations. If the advisory committee finds that the regulatory process may be developed, the advisory committee, shall include within its report the facts and rationale supporting the finding and the essential steps required in that regulatory process. The advisory committee shall report its findings to the Seismic Safety Commission by December 31, 2002.

(c) By January 8, 2003, and after reviewing the advisory committee' s findings, the Seismic Safety Commission shall make a determination as to whether the regulatory process described in subdivision (b) may be developed, and shall report that determination to the Governor and the Legislature.

(d) If the Seismic Safety Commission determines that the regulatory process may be developed, the State Architect shall draft regulations to establish that regulatory process and to delineate the required retrofitting, deconstructive testing, continuous inspection procedures, and other necessary certifications and requirements that must be completed for a building to ensure it meets the equivalent pupil safety performance standard as a building constructed according to the Field Act and its implementing regulations. The State Architect shall promulgate the regulations on or before April 1, 2003, as emergency regulations in accordance with the rulemaking provisions of the Administrative Procedure Act (Chapter 3.5 (commencing with Section 11340) of Part 1 of Division 3 of Title 2 of the Government Code).

(e) Notwithstanding any law, a leased or purchased building that is determined to have the equivalent pupil safety performance standard as a building constructed according to the Field Act and implementing regulations is hereby deemed to be in full compliance with the safety requirements of a school building as set forth in Section 17280, and is hereby deemed to be in full compliance with the Field Act.

(Added by Stats.2002, c. 33 (A.B.16), §29, eff. April 29, 2002.)

§17281 Short Title

This article, together with Article 6 (commencing with Section 17365), and Article 7 (commencing with Section 81130) of Chapter 1 of Part 49, shall be known and may be cited as the "Field Act."

(Added by Stats.1996, c. 277 (S.B.1562), § 3, operative Jan. 1, 1998.)

§17282 Damage caused by natural disasters; repairs, alterations, or reconstruction; expedited review and approval process; time limitations

(a) It is the intent of the Legislature to expedite the repair, alteration, and reconstruction of school facilities that have been damaged or destroyed by fire, earthquake, flood, or other manmade or natural disasters, to return those school facilities to a condition that makes them useful to school districts in the least amount of time and at the lowest appropriate cost while maintaining the integrity and safety of the structure as required by the laws of this state.

(b) Notwithstanding any other law, if a school facility has been damaged or destroyed by fire, earthquake, flood, or other manmade or natural disaster, all reviews or approvals required by this article shall be expedited. In no event shall any review or approval exceed 60 days, excluding weekends and holidays, from the date of receipt of all complete plans, specifications, and documentation for the facilities from the district.

(c) If, upon review, the plans or specifications require minor amendment or modification, these minor amendments or modifications shall not delay the completion of the review or approval beyond the 60-day requirement specified in subdivision (b) unless the amendment or modification constitutes a major substantive change affecting the entire project. While any minor amendments or modifications are being undertaken, the remainder of the project shall continue under review so that a timely and adequate review may be completed within the 60-day requirement of subdivision (b).

(d) A state agency that is required to perform any review or approval under this article may hire additional personnel or incur any additional costs necessary to perform the review or approval within the time limits set forth in this section and shall charge the district a fee not to exceed the actual cost of the review or approval.

(e) As used in this section, "damaged" means damages to the extent that occupancy is precluded based upon a report of an architect or a structural engineer and the concurrence of the Department of General Services in the report's conclusion that the occupancy of the premises is precluded.
(f) The expedited review and approval required by this section shall not apply if the documents are not submitted within six months of the damage to, or destruction of, the facilities.

(Added by Stats.1996, c. 277 (S.B.1562), § 3, operative Jan. 1, 1998.)

§17283 "School building"
"School building" as used in this article means and includes any building used, or designed to be used, for elementary or secondary school purposes and constructed, reconstructed, altered, or added to, by the state or by any city or city and county, or by any political subdivision, or by any school district of any kind within the state, or by any regional occupational center or program created by or authorized to act by an agreement under joint exercise of power, or by the United States government, or any agency thereof.

(Added by Stats.1996, c. 277 (S.B.1562), § 3, operative Jan. 1, 1998.)

§17284 Nonconforming school building; extension of use
Any school building, as defined in Section 17283, operated by a county official, board, or commission which on the effective date of this section is in violation of this article, if compliance therewith was otherwise required, may be continued in use as a school building after June 30, 1975, provided that no building shall be operated after that date unless the county official, board, or commission requests and obtains from the State Allocation Board authority for use of the building for a specific period after that date.

Concurrent with the request the county official, board, or commission shall file with the State Allocation Board a statement or resolution declaring an intention to utilize the building as a school building after June 30, 1975, pending its repair, reconstruction, or replacement.

The State Allocation Board shall not authorize the county official, board, or commission to use the building after June 30, 1975, unless it has first determined that the affected authority has already proceeded with a plan of total repair, reconstruction, or replacement in a timely manner and the contract has been let for any phase of, and work commenced on, the project.

In no event shall the State Allocation Board authorize the use of these unsafe facilities for a period extending beyond the completion of the replacement facilities or beyond June 30, 1977, whichever occurs first.

(Added by Stats. 1996, c. 277 (S.B.1562), §3, operative Jan. 1, 1998.)

§17284.5 Nonconforming existing private buildings; use as school buildings; extension of waivers
(a) Notwithstanding any provision of law to the contrary, any waiver granted by the State Allocation Board to a school district for use of a nonconforming existing private building acquired for conversion for use as a school building, that had not expired prior to January 1, 2000, is hereby extended until January 1, 2002, if the work to make the building a conforming structure commenced prior to January 1, 2001, but had not been completed by that date.

(Added by Stats. 199, c. 304 (S.B.142), §1. Amended by Stats.2000, c. 135 (A.B.2539), §32; Stats. 2000, c. 202 (A.B.2811), §1.)

§17285 Leased nonconforming buildings
(a) Notwithstanding any provision of law except Sections 17286, 17287, 17405, and this section, a leased building that does not meet the requirements of Section 17280 may not be used as a school building, as defined in Section 17283, after September 1, 1990.

(b) A school district may lease a commercial building prior to January 1, 2003, that does not meet the requirements of Section 17280, for use as a school building, as defined in Section 17283, if the governing board of the district finds that all of the following conditions have been met:

(1) The building was constructed in accordance with seismic safety standards for commercial buildings constructed within an earthquake zone.

(2) The building permit for the initial construction of the building was issued on or after January 1, 1990.

(3) A structural engineer has inspected the building and submitted a report to the governing board of the school district that certifies that the building is in substantial compliance with the requirements of the Field Act. This certification requirement is satisfied if the structural engineer affixes his or her seal of approval to the report and he or she attests in that report that to the best of his or her knowledge:

(A) He or she has reviewed the design calculations, construction documents, and the local government construction inspection records of the building to the extent available.

(B) He or she has authorized testing and has observed or reviewed the test results and the inspections of an adequate sample of the structure's welds, anchor bolts, and other structural elements.

(C) He or she has observed that the overhead nonstructural elements, including, but not limited to, light fixtures, heating, and air-conditioning diffusers are adequately braced or anchored.

The governing board of the school district shall submit the report to the Division of the State Architect for its review. The Division of the State Architect has one month to review the report for compliance with the above requirements, and to provide feedback to the structural engineer regarding any insufficiencies with the report, and whether or not the building is in substantial compliance with the requirements of the Field Act. If the Division of the State Architect does not respond within one month of the final and complete report being submitted, the Division of the State Architect will be deemed to have concurred with the structural engineer's report. A final decision by the governing board of the school district to occupy the building for school purposes shall not occur until the governing board has reviewed and considered the feedback of the Division of the State Architect, or the one month review period has passed.

No member of the governing board of a school district, nor any employee of a school district, shall be held personally liable for injury to persons or damage to property resulting from the fact that the governing board of the school district used a commercial building pursuant to this subdivision for a school and the building was not constructed under the requirements of Section 17280. This exemption from personal liability for members of the governing board and employees of a school district is not intended to limit the liability of the school district for injury to persons or damage to property resulting from the fact that the governing board or any employee of the school district used a commercial building pursuant to this subdivision for a school and the building was not constructed under the requirements of Section 17280. This exemption from personal liability for members of the governing board and employees of a school district is not intended to limit the liability of the school district, the governing board or the district's employees pursuant to Section 835 of the Government Code. Section 17312 is not applicable to a person who, pursuant to this section, leases or uses a building for a school building that meets the requirements of this section but does not meet the requirements of Section 17280. Approval and use of a building pursuant to subdivision (b) of Section 17285 does not constitute a violation of the Field Act.

(c) A building leased pursuant to Section 17280 may be used after September 1, 1991, as a regional occupational center or program that does not meet the requirements of Section 17280, provided the building satisfies all of the following conditions:

(1) The facility is one of the following:

(A) A single-story, wood-framed structure.

(B) A single-story, light steel frame structure.

(C) A structure for which a structural engineer has submitted a report that certifies that substantial structural hazards do not exist, as to that structure. The governing board of the regional occupational center or program, as provided for under Section 52310.5, shall review the report prior to approval of the lease and may reject the report if there is any evidence of fraud regarding the facts in the report.

(2) The building or structure complies with all applicable local building standards and all applicable local health and safety standards in the community in which it is located.

(3) The governing board of the regional occupational center or program, as provided for under Section 52310.5, certifies to the State Allocation Board that reasonable efforts have been made to locate the regional occupational center or program in facilities that conform to the seismic safety standards set forth in Part 2 (commencing with Section 2-101), Part 3 (commencing with Section 3-089-1), Part 4 (commencing with Section 4403), and Part 5 (commencing with Section 5102), of Title 24 of the California Code of Regulations.

(d) On or before September 1, 1994, and every three years thereafter, each governing board of a regional occupational center or program shall report to the State Allocation Board on the facilities utilized for the operation of that center or program and on efforts to place the center or program in facilities that conform to the seismic safety standards described in paragraph (3) of subdivision (b).

(Added by Stats.1996, c. 277 (S.B.1562), § 3, operative Jan. 1, 1998. Amended by Stats.1997, c. 629 (A.B.865), § 1.)

§17286 "School building"; exemption for certain facilities

Where the primary use of either a building or complex within which the building is situated, operated by an official or board of a city, city and county or county, is for purposes other than educational, such as, but not limited to, correctional, forestry, or hospital purposes, the building shall not be considered to be a "school building" within the meaning of Section 17283 notwithstanding any educational use thereof incidental to the primary purpose.

(Added by Stats.1996, c. 277 (S.B. 1562), § 3, operative Jan. 1, 1998.)

§17287 "School building'; exclusion of buildings used for outdoor science, conservation, and forestry classes

For the purposes of this article and Article 6 (commencing with Section 17365), "school building" does not include (a) any building of a school district or county superintendent of schools which is used solely for classes or programs in outdoor science, conservation, and forestry in accordance with Article 5 (commencing with Section 8760) of Chapter 4 of Part 6 and which does not occupy, in whole or in part, the same parcel of land upon which there is situated any school maintained by the district or county superintendent, or (b) agricultural education laboratory facilities used primarily for plant and animal production or the storage of materials, equipment, and supplies involved in this production.

(Added by Stats.1996, c. 277 (S.B.1562), § 3, operative Jan. 1, 1998.)

§17288 Special educational services on university campuses; exemption from school building requirements; notice

(a) Notwithstanding Section 17285, any high school pupil who attends a class or classes on a campus of the University of California or the California State University in order to receive specialized educational services and opportunities authorized by Chapter 6 (commencing with Section 58800) of Part 31 and any adult attending a special education program established pursuant to Part 30 (commencing with Section 56000), is considered a pupil of that campus for the purposes of Article 3 (commencing with Section 17280) of Chapter 3 of Part 10.5. Any building or structure or portion of building or structure that pupils occupy pursuant to this section shall not be considered "school buildings" within the meaning of Section 17283.

(b) The governing board of each school district, each county board of education, or each county superintendent of schools, as appropriate, shall notify, in writing, the parent or guardian of each high school pupil who attends a class or classes authorized by Chapter 6 (commencing with Section 58800) of Part 31 and each adult attending a special education program established pursuant to Part 30 (commencing with Section 56000), prior to the pupil's attendance at the class on a university campus that, although University of California and California State University buildings are required to conform to the rigorous standards of the Uniform Building Code (UBC), the buildings on the university campuses may not meet the requirements of Article 3 (commencing with Section

17280) of Chapter 3 of Part 10.5. This notice shall accompany, to the greatest extent possible, any existing notification to parents or guardians regarding specialized educational services and opportunities.

(Added by Stats.1996, c. 277 (S.B.1562), § 3, operative Jan. 1, 1998.)

§17289 Exemptions for facilities used for independent study; requirements; duration of exemption
In order to provide alternative, community-based educational opportunities through independent study, any school district or county office of education may request an exemption from the State Allocation Board for a building or structure, or portion of a building or structure, from the definition of "school buildings" within the meaning of Section 17283. The exemptions may be granted for no longer than two years and exemptions are renewable. An exemption may only be granted if the school district or county office of education demonstrates to the satisfaction of the State Allocation Board all of the following:

(a) The building or structure, or portion of building or structure, satisfies all of the following:

(1) It is not located on a regular school site.

(2) It complies with all applicable local building standards and all relevant local health and safety standards in the community in which it is located.

(3) It is used for independent study.

(4) It serves fewer than 25 pupils enrolled in kindergarten or any of the grades 1 to 12, inclusive, at any one time in the building or structure, or in a portion of a building or structure where the remainder of the building or structure is not used for instructional purposes.

(b) The use of the building or structure is critical to providing an effective alternative, community-based program.

(c) The use of other buildings or structures that would meet seismic safety standards for school facilities is not practical.

(Added by Stats.1996, c. 277 (S.B.1562), § 3, operative Jan. 1, 1998.)

§17290 Repealed by Stats.1997, c. 320(S.B.708), §1, eff. Aug. 18, 1997, operative Sept. 30, 1997

§17291 Owned relocatable facilities; waiver of provisions; extension; applicability
(a) An owned relocatable building or structure that is to be used for school purposes shall be subject to the provisions of Article 3 (commencing with Section 17280) and Article 6 (commencing with Section 17365).

(b) Notwithstanding any other provision of law, this section shall become operative on September 30, 1997.

(Added by Stats.1996, c. 277 (S.B.1562), § 3, operative Sept. 30, 1997. Amended by Stats.1997, c. 320 (S.B.708), § 2, eff. Aug. 18, 1997, operative Sept. 30, 1997.)

§17292 Use of owned or leased relocatable building as school building; conditions
(a) Notwithstanding any provision of law, an owned or leased relocatable building that does not meet the requirements of Section 17280 may be used until September 30, 2007, as a school building, if all of the following conditions are met:

(1) The relocatable building was manufactured and was in use for classroom purposes on or before May 1, 2000, and bears a commercial coach insignia of approval from the Department of Housing and Community Development.

(2) The relocatable building is a single story structure with not more than 2,160 square feet of interior floor area when all sections are joined together.

(3) The relocatable building was constructed after December 19, 1979, and bears a commercial coach insignia of approval from the Department of Housing and Community Development.

(4) The bracing and anchoring of interior overhead nonstructural elements, such as light fixtures and heating and air-conditioning diffusers, and the foundation system complies with the applicable rules and regulations adopted pursuant to this article and published in Title 24 of the California Code of Regulations.

(5) The building construction, including associated site construction, except for the relocatable building defined in paragraph (2), complies with the applicable rules and regulations adopted pursuant to this article, Sections 4450 to 4458, inclusive, of the Government Code, and Section 13143 of the Health and Safety Code and the administrative and building standards published in Title 19 and Title 24 of the California Code of Regulations.

(6) The Department of General Services has issued a certification of compliance with the requirements of this article.

(b) The Department of General Services may assess fees to carry out the requirements of this section. Fees imposed pursuant to this subdivision shall be equal to the costs associated with making the certifications and inspections required by, and otherwise enforcing, this section and shall be deposited in the Public School Planning, Design, and Construction Review Revolving Fund.

(c) Any relocatable building that has received a certification of compliance from the Department of General Services pursuant to subdivision (a) shall be reinspected for structural integrity by the Division of the State Architect by December 31, 2002.

(d) For each relocatable building that was used as a school building pursuant to this section, the governing board of the school district shall adopt a resolution by October 30, 2007, certifying to the State Allocation Board that commencing September 30, 2007, the reolocatable building is no longer being used as a school building.

(Added by Stats.1996, c. 277 (S.B.1562), §3, operative Jan. 1, 1998. Amended by Stats.2000, c. 747 (S.B. 1469), §1, eff.Sept.27, 2000.)

§17292.5 Expelled pupils program; operation of program; lease agreements for facilities

(a) If the governing board of a school district operates a program for expelled pupils, the governing board shall do one or more of the following:

(1) Utilize available school facilities that conform to the requirements of Part 2 (commencing with Section 2-101), Part 3 (commencing with Section 3-089-1), Part 4 (commencing with Section 4-403), and Part 5 (commencing with Section 5-102), of Title 24 of the California Code of Regulations.

(2) Apply for emergency portable classrooms pursuant to Chapter 25 (commencing with Section 17085) of Part 10.

(3) Enter into lease agreements for facilities, provided that the facilities are limited to a structure where a structural engineer has submitted a report that determines substantial structural hazards do not exist.

(b) Before entering into any lease pursuant to paragraph (3) of subdivision (a), the governing board of the school district shall certify to the State Allocation Board that all reasonable efforts have been made to locate the program in facilities that conform to the structural safety standards listed in paragraph (1) of subdivision (a).

(c) On or before September 1, 1996, and every three years thereafter, each school district shall report to the State Allocation Board on the facilities utilized for the operation of these programs and efforts to place programs in facilities that conform with the requirements of Part 2 (commencing with Section 2-101), Part 3 (commencing with Section 3-089-1), Part 4 (commencing with Section 4-403), and Part 5 (commencing with Section 5-102), of Title 24 of the California Code of Regulations.

(Added by Stats.1996, c. 277 (S.B.1562), § 3, operative Jan. 1, 1998.)

§17293 Pregnant and parenting teen program; operation of new or expanded program; lease agreements for school facilities

Text of section operative until fulfillment of conditions specified in §13 of Stats.1998, c. 1078 (S.B.1064).

(a) On or after January 1, 1993, if a county superintendent or school district elects to operate a new or expanded pregnant and parenting teen program pursuant to Chapter 6.5 (commencing with Section 8910) of Part 6, the county superintendent or school district may enter into lease agreements for school facilities as set forth in subdivision (b), if both of the following conditions are met:

(1) All available school facilities that conform to the requirements of Article 3 (commencing with Section 17280) and Article 6 (commencing with Section 17320) have been utilized.

(2) If facilities meeting the requirements of paragraph (1) are not available, the school district or county superintendent of schools has applied to lease or purchase emergency portable classrooms pursuant to Chapter 14 (commencing with Section 17085) of Part 10 and the application was either not approved, or the portable classrooms approved will not meet the needs of the county superintendent of schools or the school district.

(b) Notwithstanding any other provision of law, the county superintendent or the school district may enter into lease agreements as follows:

(1) The lease may be for a period of up to five years if a report and certification of safety is prepared by a structural engineer that verifies that the building meets local safety standards and that substantial structural hazards do not exist. The county board of education or school district governing board, as the case may be, shall review the report and certification prior to the approval of the lease and may reject the report if there is evidence of fraud regarding the facts in the report.

(2) Before entering into any lease, the county superintendent or the school district shall certify that all reasonable efforts have been made to locate programs in facilities that conform to paragraph (1) or (2).

(Added by Stats. 1996, c. 277 (S.B.1562), § 3, operative Jan. 1, 1998.)

For text of section operative upon fulfillment of conditions specified in §13 of Stats.1998, c. 1078 (S.B.1064), see Education Code § 17293, ante.

§17293 Pregnant and parenting teen program; operation of new or expanded program; lease agreements for school facilities

(a) On or after January 1, 1993, if a county superintendent or school district elects to operate a new or expanded pregnant and parenting teen program pursuant to Article 7.1 (commencing with Section 54740) of Chapter 9 of Part 29, the county superintendent or school district may enter into lease agreements for school facilities as set forth in subdivision (b), if both of the following conditions are met:

(1) All available school facilities conform to the requirements of Article 3 (commencing with Section 17280) and Article 6 (commencing with Section 17320).

(2) If facilities meeting the requirements of paragraph (1) are not available, the school district or county superintendent of schools has applied to lease or purchase emergency portable classrooms pursuant to Chapter 14 (commencing with Section 17085) of Part 10 and the application was either not approved or the portable classrooms approved will not meet the needs of the county superintendent of schools or the school district.

(b) Notwithstanding any other provision of law, the county superintendent or the school district may enter into lease agreements as follows:

(1) A report and certification of safety shall be prepared by a structural engineer that verifies that the building meets local safety standards and that substantial structural hazards do not exist. The county board of education or school district governing board, as the case may be, shall review the report and certification

prior to the approval of the lease and may reject the report if there is evidence of fraud regarding the facts in the report. In addition, the county board of education or the governing board of the school district shall cause to be prepared and maintained on file a report and certification of safety by a structural engineer every five years from the date of the initial lease as long as the building continues to be used and a statement that the building continues to meet local safety standards and that structural hazards do not exist.

(2) Before entering into any lease, the county superintendent or the school district shall certify that all reasonable efforts have been made to locate programs in facilities that conform to paragraph (1) or (2) of subdivision (a).

(Added by Stats. 1996, c. 277 (S.B.1562), § 3, operative Jan. 1, 1998; Stats.1998, c. 1078 (S.B.1064), § 8.)

For text of section operative upon fulfillment of conditions specified in §13 of Stats.1998, c. 1078 (S.B. 1064), see Education §17293, ante.

§17293.5 Leasing of buildings on temporary basis for parenting and pregnant teen education programs; exemption of building from certain requirements

(a) Notwithstanding any other provision of law, if a school district leases a building on a temporary basis for the purposes of housing a pregnant and parenting teen education program, the building shall be exempt from this article and Article 6 (commencing with Section 17365).

(b) This section shall remain in effect only until January 1, 2002, and as of that date is repealed, unless a later enacted statute, that is enacted before January 1, 2002, deletes or extends that date.

(Added by Stats.2000, c. 65 (A.B. 1830), § 1, operative July 3, 2000)

Repeal

This section is repealed by its own terms on Jan. 1, 2002.

§17294 "Construction or alteration"

"Construction or alteration" as used in this article includes any construction, reconstruction, or alteration of, or addition to, any school building.

(Added by Stats.1996, c. 277 (S.B.1562), § 3, operative Jan. 1, 1998.)

§17295 Required approval of plans by Department of General Services

(a) (1) The Department of General Services shall pass upon and approve or reject all plans for the construction or, if the estimated cost exceeds twenty-five thousand dollars ($25,000), the alteration of any school building.

(2) To enable the Department of General Services to pass upon and approve plans pursuant to this subdivision, the governing board of each school district and any other school authority before adopting any plans for the school building shall submit the plans to the Department of General Services for approval, and shall pay the fees prescribed in this article.

(b) Notwithstanding subdivision (a) of Section 17295, where the estimated cost of the reconstruction or alteration of, or an addition to, any school building exceeds twenty-five thousand dollars ($25,000) but does not exceed one hundred thousand dollars ($100,000), a licensed structural engineer shall examine the proposed project to determine if it is a nonstructural alteration or a structural alteration. If he or she determines that the project is a nonstructural alteration, he or she shall prepare a statement so indicating. If he or she determines that the project is structural, he or she shall prepare plans and specifications for the project, which shall be submitted to the Department of General Services for review and approval. A copy of the engineer's report stating that the work does not affect structural elements shall be filed with the Department of General Services.

(c) If a licensed structural engineer submits a report to the Department of General Services stating that the plans or activities authorized pursuant to subdivision (b) do not involve structural elements, then all of the following shall apply to that project:

(1) The design professional in responsible charge of the project undertaken pursuant to this subdivision shall certify that the plans and specifications for the project meet any applicable fire and life safety standards, and do not affect the disabled access requirements of Section 4450 of the Government Code, and shall submit this certification to the department. The letter of certification shall bear the identifying licensing stamp or seal of the design professional. This provision does not preclude a design professional from submitting plans and specifications to the department along with the appropriate fee for review.

(2) Within 10 days of the completion of any project authorized pursuant to subdivision (b), the school construction inspector of record on the project, who is certified by the department to inspect school buildings, shall certify in writing to the department that the reconstruction, alteration, or addition has been completed in compliance with the plans and specifications.

(3) The dollar amounts cited in this section shall be increased on an annual basis, commencing January 1, 1999, by the department according to an inflationary index governing construction costs that is selected and recognized by the department.

(4) No school district shall subdivide a project for the purpose of evading the limitation on amounts cited in this section.

(d) For purposes of this section, "design professional in responsible charge" or "design professional" means the licensed architect, licensed structural engineer, or licensed civil engineer who is responsible for the completion of the design work involved with the project.

(Added by Stats.1996, c. 277 (S.B.1562), § 3, operative Jan. 1, 1998. Amended by Stats.1997, c. 390 (A.B.611). § 2, eff. Aug. 27, 1997; Stats. 2001, c. 422 (A.B. 1478), §2.)

§17296 School-based integrated children's services program facility; exemption

Notwithstanding any other provision of law, any school-based facility providing social services or support services, or health care, that is established through agreements with local governments and school districts pursuant to Chapter 5 (commencing with Section 8800) of Part 6 or as part of an integrated children's services program pursuant to Chapter 12.9 (commencing with Section 18986.40) of Part 6 of Division 9 of the Welfare and Institutions Code, respectively, is located on school property, and meets all the requirements of the Uniform Building Code and has been approved by the building department of the appropriate local jurisdiction, as well as those of the appropriate local jurisdiction, shall not be required to obtain approval of plans by the Department of General Services pursuant to Section 17295.

(Added by Stats.1996, c. 277 (S.B.1562), § 3, operative Jan. 1, 1998.)

§17297 Required safety approval by Department of General Services before letting any contract

Except as provided in Section 17298, before letting any contract for any construction or alteration of any school building, the written approval of the plans, as to safety of design and construction, by the Department of General Services, shall be first had and obtained.

(Added by Stats.1996, c. 277 (S.B.1562), § 3, operative Jan. 1, 1998.)

§17298 Fabrication, construction or alteration of relocatable school building with previous approval

Before the commencement of any fabrication, construction, or alteration of a relocatable school building of a type previously approved by the Department of General Services, the written approval of the plans, as to the safety and design of construction, by the Department of General Services, shall be first had and obtained.

(Added by Stats.1996, c. 277 (S.B.1562), § 3, operative Jan. 1, 1998.)

§17299 Requirements of specifications, structural design computations and cost estimates with plans submitted for approval

In each case the application for approval of the plans shall be accompanied by the plans and full, complete, and accurate specifications, and structural design computations, and estimates of cost, which shall comply in every respect with any and all requirements prescribed by the Department of General Services.

(Added by Stats.1996, c. 277 (S.B.1562), § 3, operative Jan. 1, 1998.)

§17300 Filing fees for submission of plans for approval; rates; installments

(a) The application shall be accompanied by a filing fee in amounts as determined by the Department of General Services based on the estimated cost of the work described in subdivision (a) of Section 17280, according to the following schedule:

(1) For the first one million dollars ($1,000,000), a fee of not more than 0.7 percent of the estimated cost.

(2) For all costs in excess of one million dollars ($1,000,000), a fee of not more than 0.6 percent of the estimated cost.

The minimum fee in any case shall be two hundred fifty dollars ($250). If the actual cost exceeds the estimated cost by more than 5 percent, a further fee shall be paid to the Department of General Services, based on the above schedule and computed on the amount by which the actual cost exceeds the amount of the estimated cost.

(b) The fees determined pursuant to subdivision (a) shall be paid in two installments, as specified by the Department of General Services. The first installment shall be in an amount equal to 70 percent of the estimated cost calculated under subdivision (a), and shall be paid at the time the application is submitted to the department. The second installment shall be in an amount equal to 30 percent of the estimated cost calculated under subdivision (a), and shall be paid no later than five working days after the applicant accepts the bids for construction of the project for which the fees are paid. This subdivision shall become operative January 1, 1994.

(c) The fee shall be paid to the Department of General Services, including, but not limited to, a case in which the application is referred under Section 17306 to a qualified plan review firm.

(Stats.1976, c. 1010, §2, operative April 30, 1977; Added by Stats 1996, c. 277 (S.B.1562), § 3, operative Jan. 1, 1998.)

§17301 Public school planning, design, and construction review revolving fund; fees; audits

(a) All fees received by the Department of General Services pursuant to this chapter shall be paid into the State Treasury and credited to the Public School Planning, Design, and Construction Review Revolving Fund, which is hereby created. Notwithstanding Section 13340 of the Government Code, all moneys in the fund are hereby continuously appropriated for expenditure by the Department of General Services to be applied, in the most efficient and expeditious manner possible, to the expenses associated with the review and approval of plans and specifications, and the supervision of public school building construction, pursuant to this article and Article 5 (commencing with Section 17350). The fees paid into the fund shall not be used for or diverted to any other program or purpose. Notwithstanding any other provision of law, any moneys in the Architecture Public Building Fund on the effective date of this section thereupon shall be transferred to the Public School Planning, Design, and Construction Review Revolving Fund for expenditure in accordance with this section.

Adjustments in the amounts of the fees, as determined by the Department of General Services, may be made by the department within the limits set forth in Sections 17300 and 17352 in order to maintain a reasonable working balance in the fund.

(b) The Department of Finance shall provide for the audit of the fund as needed to ensure that it is used solely for the purposes of this article and that the amount of the fee charged does not exceed what is necessary to cover the costs realized by the Department of General Services in carrying out its responsibilities pursuant to this article. The actual cost of the audit shall be paid from the fund.

(Added by Stats.1996, c. 277 (S.B.1562), § 3, operative Jan. 1, 1998.)

§17302 Preparers of plans, specifications, and estimates; qualifications; observation of construction

(a) Except as provided in subdivision (b), all plans, specifications, and estimates shall be prepared by a licensed architect holding a valid certificate under Chapter 3 (commencing with Section 5500) of Division 3 of the Business and Professions Code or by a structural engineer holding a valid certificate to use the title structural engineer under Chapter 7 (commencing with Section 6700) of Division 3 of the Business and Professions Code, and the observation of the work of construction shall be under the responsible charge of such an architect or structural engineer.

(b) For the purposes of this section, a mechanical or electrical engineer holding a valid certificate under Chapter 7 (commencing with Section 6700) of Division 3 of the Business and Professions Code may be in responsible charge of preparation of plans, specifications, and estimates, and observation of the work of construction where the work is, as determined by the Department of General Services, of the kind normally performed by engineers certified in the particular branch of engineering for which the engineer is certified. Any architectural or structural work involved shall be the respective responsibility of a licensed architect holding a valid certificate under Chapter 3 (commencing with Section 5500) of Division 3 of the Business and Professions Code, or a structural engineer holding a valid certificate to use the title structural engineer under Chapter 7 (commencing with Section 6700) of Division 3 of the Business and Professions Code.

(Added by Stats.1996, c. 277 (S.B.1562), § 3, operative Jan. 1, 1998.)

§17303 Plan review; complete application; methods to reduce time lapse; notice

(a) The Department of General Services shall establish one or more methods to ensure that each application has been completed sufficiently by the applicant to enable the plan review to be performed.

(b) Upon receipt of a complete application, the Department of General Services shall inform the applicant of the period of time that it anticipates to elapse prior to commencing review of the applicant's plans. Within 10 days of being so notified, the applicant shall make an election to either use the Department of General Services for the review of the applicant's plan or, request the plan review be performed by one or more qualified plan review firms pursuant to Sections 17305 and 17306. If the applicant elects to use the services of the Department of General Services for review of the applicant's plan, the department, as necessary to expedite review of the applicant's plans, shall do one or more of the following:

(1) Contract for assistance from one or more qualified plan review firms pursuant to Section 17305.

(2) Employ additional staff on a temporary basis.

(3) Maximize the use of department staff through the use of overtime or other appropriate means.

(4) Any other action determined by the department to have the effect of expediting the review and approval process.

(c) Each application shall identify, for purposes of receiving the notifications required under this subdivision, an employee of the applicant school district and either the applicant's architect or structural engineer. The Department of General Services immediately shall notify that employee, and the identified architect or structural engineer, when each of the following steps in the plan review process occurs:

(1) The department requests the applicant's architect or structural engineer to correct or complete any part of the application.

(2) An application number is assigned to the application.

(3) Review of the applicant's plans is commenced.

(4) Review of the applicant's plans is completed and the department returns the plans to the architect or structural engineer for correction.

(5) Corrected plans are returned to the department by the applicant's architect or structural engineer for final review and approval.

(6) The department approves the plans and causes a final record set of the plans to be printed in accordance with Section 17304.

(d) The Department of General Services may provide additional notifications to applicants as it deems necessary.

(Added by Stats.1996, c. 277 (S.B.1562), § 3, operative Jan. 1, 1998. Amended by Stats.1998, c. 407 (S.B.50), § 9, eff. Aug.27, 1998.)

§17304 Printing of plans; approval letter

(a) Upon approving the plans submitted by an applicant pursuant to this article, the Department of General Services shall cause a final record set of the plans to be printed. The department may contract with one or more private entities to perform that printing at one or more of the regional area offices of the department. The costs incurred pursuant to this subdivision shall be paid by the applicant.

(b) No later than five working days after approving plans submitted by an applicant pursuant to this article, the department shall issue a final letter of approval to the applicant.

(Added by Stats.1996, c. 277 (S.B.1562), § 3, operative Jan. 1, 1998.)

§17305 Qualified plan review firms; contracts

(a) Notwithstanding Section 14952 of the Government **Code**, the Department of General Services shall contract with a sufficient number of qualified plan review firms for assistance in performing the plan review required under this article or Article 5 (commencing with Section 17350).

(b) For purposes of this article, "qualified plan review firm" means an individual, firm, or the building official of a city, a county, or a city and county, as defined in Section 18949.27 of the Health and Safety Code or the authorized representative of the building official that is identified by the Department of General Services as having appropriate expertise and knowledge of the requirements that apply to school buildings under this article. The department shall establish and maintain a list of the individuals and firms, and building officials or the authorized representatives of building officials so identified, and shall make that list available, upon request, to school districts and other interested parties.

§17306 Review of application; referral of documents to review firm

(a) Upon submitting a complete application for review under this article, the applicant may request that the Department of General Services refer the documents necessary for the review of that application to a qualified plan review firm operating under contract with the department pursuant to Section 17305. The department immediately shall grant the request and refer the necessary documents to a qualified plan review firm if the applicant so requests.

Upon completing the review, the qualified plan review firm shall submit the documents referred to it for the review of the application, together with the results of its review, to the Department of General Services.

(b) The Department of General Services shall establish a procedure governing the use by applicants of the review process alternative described in this section, including, but not limited to, provisions restricting the use of qualified plan review firms on the basis of conflict of interest.

(Added by Stats.1996, c. 277 (S.B.1562), §3, operative Jan. 1, 1998. Amended by Stats.1998, c. 407 (S.B.50), §11, eff. Aug. 27, 1998.)

§17307 Compliance with the provisions of this article and approval of the Department of General Services

No contract for the construction or alteration of any school building, made or executed by the governing board of any school district or other public board, body, or officer otherwise vested with authority to make or execute a contract, is valid, and no public money shall be paid for any work done under a contract or for any labor or materials furnished in constructing or altering any building, unless the plans, specifications, and estimates comply in every particular with the provisions of this article and the requirements prescribed by the Department of General Services and unless the approval thereof in writing has first been had and obtained from the Department of General Services.

(Added by Stats.1996, c. 277 (S.B.1562), §3, operative Jan. 1, 1998.)

§17307.5 Construction work on public schools; issuance of stop work orders; liability

(a) Notwithstanding any provision of law to the contrary, including, but not limited to, Title 15 (commencing with Section 3082) of Part 4 of the Civil Code, the Department of General Services may issue a stop work order when construction work on a public school is not being performed in accordance with existing law and would compromise the structural integrity of the building, thereby endangering the public safety. The Department of General Services shall allow construction of incidental and minor nonstructural additions or nonstructural alterations without invoking its stop work authority.

(b) A school district, county superintendent of schools, county board of education, or other public board, body, or officer whose construction work on a public school is subject to a stop work order issued pursuant to subdivision (a) shall not be held liable in any action filed against the public board, body, or officer for stopping work as required by the stop work order, or for any delays caused by compliance with the stop work order, except to the extent that an error or mission by the public board, body, or officer is the basis for the issuance of the stop work order.

(Added by Stats.2000, c. 463 (A.B.2791), § 1.)

§17308 Legislative findings; employee training; interpretational materials

(a) The Legislature finds and declares that a number of serious discrepancies in the interpretation of the structural standards and architectural barrier requirements that apply to school buildings under this chapter, and of the plan review procedures that apply under this chapter, exist within the Department of General Services, and within and between various firms utilized by the department on a contract basis, applicant school districts, and architects and structural engineers utilized by applicant school districts.

(b) The Department of General Services shall provide training, on an ongoing basis, to its employees and to the employees of architectural and structural engineering firms that contract with the department for the purposes of this chapter. The training shall address all phases of the plan review process established under this chapter, and shall be designed to ensure that all individuals who develop and review school building plans obtain sufficient knowledge of the rules, regulations, and standards that apply under this chapter.

(c) The department shall make the training described in subdivision (b) available to the employees of architectural and structural engineering firms that contract with applicant school districts for the purpose of this chapter, and to any other individuals, firms, and government agencies that are involved in school building design, construction, or inspection and that may benefit from the training. The department may charge a fee for training provided pursuant to this subdivision.

(d) The department shall develop and publish interpretations of the structural standards, architectural barrier requirements, and review procedures referred to in subdivision (a) as may be necessary to remedy the interpretational discrepancies described in that subdivision. These interpretational materials shall be updated at least annually.

(Added by Stats.1996, c. 277 (S.B.1562), §3, operative Jan. 1, 1998.)

§17309 Reports required of architects, engineers, and inspectors; information required

From time to time, as the work of construction or alteration progresses and whenever the Department of General Services requires, the licensed architect or structural engineer in charge of observation of construction or registered engineer in charge of observation of other work, the inspector on the work, and the contractor shall each make to the Department of General Services a report, duly verified by him or her, upon a form prescribed by the Department of General Services, based upon his or her own personal knowledge, indicating that the work during the period covered by the report has been performed and materials have been used and installed, in every material respect, in compliance with the approved plans and specifications, setting forth such detailed statements of fact as are required by the Department of General Services.

The term "personal knowledge" as used in this section and as applied to the architect, and the registered engineer, means the personal knowledge which is obtained from periodic visits to the project site of reasonable frequency for the purpose of general observation of the work, and also which is obtained from the reporting of others as to the progress of the work, testing of materials, inspection and superintendence of the work that is

performed between the above-mentioned periodic visits of the architect or the registered engineer. The exercise of reasonable diligence to obtain the facts is required.

The term "personal knowledge" as applied to the inspector means the actual personal knowledge which is obtained from his or her personal continuous inspection of the work of construction in all stages of its progress at the site where he is responsible for inspection and, when work is carried out away from the site, that personal knowledge which is obtained from the reporting of others on the testing or inspection of materials and workmanship for compliance with plans, specifications or applicable standards. The exercise of reasonable diligence to obtain the facts is required.

The term "personal knowledge" as applied to the contractor means the personal knowledge, which is obtained from the construction of the building. The exercise of reasonable diligence to obtain the facts is required.

(Added by Stats.1996, c. 277 (S.B.1562), §3, operative Jan. 1, 1998.)

§17310 Rules and regulations; building standards

Except as provided in Section 18930 of the Health and Safety Code, the Department of General Services may from time to time make such rules and regulations as it deems necessary, proper, or suitable to carry out the provisions of this article.

The Department of General Services shall adopt and submit building standards for approval pursuant to Chapter 4 (commencing with Section 18935) of Part 2.5 of Division 13 of the Health and Safety Code for the purposes described in this article.

(Added by Stats.1996, c. 277 (S.B.1562), §3, operative Jan. 1, 1998.)

§17311 Inspections by Department of General Services and appointed inspector

(a) The Department of General Services shall make such inspection of the school buildings and of the work of construction or alteration as in its judgment is necessary or proper for the enforcement of this article and the protection of the safety of the pupils, the teachers, and the public. The school district, city, city and county, or the political subdivision within the jurisdiction of which any school building is constructed or altered shall provide for and require competent, adequate, and continuous inspection during construction or alteration by an inspector satisfactory to the architect or structural engineer and the Department of General Services. The inspector shall act under the direction of the governing board and architect or structural engineer as the board may direct. The Inspector shall be responsible to the governing board for employment purposes. The inspector shall be responsible to the Department of General Services for enforcement of the plans and specifications of the school project.

(b) In order to ensure the competency and adequacy of the inspectors required under this article, the Department of General Services shall do all of the following:

(1) Revise the examination used to determine the competency of those who provide inspections pursuant to this article. The revision of the examination shall include techniques of inspection, construction, plan reading, required submittal documents, and knowledge of statutes and regulations that apply to school construction. The revision of the examination shall be done not later than 48 months after the last revision and not earlier than 36 months after the last revision.

(2) Provide training on an ongoing basis to all individuals who provide the inspections required under this article. The training shall be designed to ensure that all individuals who provide the continuous inspection of school building construction or alteration are sufficiently knowledgeable of the rules, regulations, and standards that apply under this article.

(3) Require evaluation of the competency of those who provide inspections pursuant to this article. After an initial evaluation a reevaluation shall occur not later than 48 months after the last evaluation or reevaluation and not earlier than 36 months after the last evaluation or reevaluation. An evaluation or reevaluation shall include passage of the examination used to determine competence specified in paragraph (1) and attendance at training specified in paragraph (2).

(c) The Department of General Services may require a fee from all individuals applying for evaluation or reevaluation pursuant to subdivision (b), and a fee for the examination administered in the evaluation or reevaluation. The fees shall not be more than the reasonable costs associated with the development and administration of the examination and the training.

(Added by Stats.1996, c. 277 (S.B.1562), §3, operative Jan.1, 1998. Amended by Stats.1997, c. 683 (A.B.1537), §1.)

§17312 Violations and false statements

Any person who violates any of the provisions of this article or makes any false statement in any verified report or affidavit required pursuant to this article is guilty of a felony.

(Added by Stats.1996, c. 277 (S.B.1562), §3, operative Jan. 1, 1998.)

§17313 Structural inspection by Department of General Services upon special request; payment of expenses

Upon written request by the governing board of any school district or upon written request by at least 10 percent of the parents having children enrolled as pupils in any school district as certified to by the county superintendent of schools, the Department of General Services shall make an examination and report on the structural condition of any public school building of the district, subject to the payment by the governing board of the actual expenses incurred by the Department of General Services. Payment of the expenses may be waived by the Department of General Services on recommendation of the State Superintendent of Public Instruction when it appears to him or her that the school district in which the public school building is located cannot afford to pay them.

(Added by Stats.1996, c. 277 (S.B.1562), §3, operative Jan. 1, 1998.)

§17314 Approval of public school building for occupancy by Department of General Services deemed to meet local building requirements for use as a private school

Any public school building which has been approved by the Department of General Services (formerly Division of Architecture) for occupancy shall be deemed to meet the local building requirements for use as a private school.

(Added by Stats.1996, c. 277 (S.B.1562), §3, operative Jan. 1, 1998.)

§17315 Certificate of compliance; verified reports

(a) When a school building constructed in accordance with plans and specifications approved by the Department of General Services is completed, the notice of completion is filed, and all final verified reports and all testing and inspection documents, as required by this article or as required by the rules and regulations adopted pursuant to this article, are submitted to and on file with the Department of General Services, and all required fees paid by the school district, the department shall issue a certification that the school building complies with the requirements of this article. Nothing in this article shall prevent beneficial occupancy by a school district prior to the issuance of this certification.

(b) When a school building, constructed in accordance with approved plans and specifications, is completed but final verified reports, as are required under Section 39151, have not been submitted to the Department of General Services due to the incapacitating illness, death, or the default of any persons required to file such reports, the Department of General Services shall, upon written request of the school district, review all of the project records and make such examinations as it deems necessary to enable it to certify that the school building otherwise complies with the requirements of this article. The Department of General Services may request the school district to have made, reported, and verified any other tests and inspections which the department deems necessary to complete its examinations of the construction.

(c) The costs incurred by the Department of General Services in connection with this section shall be paid by the school district. The actual costs to perform the examinations, tests, and inspections shall be an appropriate cost of the project to be paid from the building funds of the district. Certification of the project by the Department of General Services shall be withheld until all the costs have been paid by the school district.

(d) This section shall not relieve any individual of his or her responsibility to file verified reports, as required in Section 17309, or any other documents required by the rules and regulations adopted pursuant to this article. This section shall not abrogate the provisions of Section 17312.

(Added by Stats.1996, c. 277 (S.B.1562), §3, operative Jan. 1, 1998.)

§17316 Contracts with structural engineers or architects; required provision making plans, specifications, and estimates the property of the school district

(a) Any contract entered into by and between the governing board of any school district and any certified architect or structural engineer pursuant to Section 17302 shall provide that all plans, including, but not limited to, record drawings, specifications, and estimates prepared pursuant thereto, shall be and remain the property of the school district for the purposes of repair, maintenance, renovation, modernization, or other purposes, only as they relate to the project for which the certified architect or structural engineer was retained. Nothing in this subdivision shall preclude the school district from using the plans, record drawings, specifications, or estimates related to the project for the purposes of additions, alignments, or other development on the site.

(b) The contract set forth in subdivision (a) shall not be construed to transfer or waive the certified architect's or structural engineer's copyrights over these documents, including, but not limited to, all common law, statutory, and other reserved rights, unless the certified architect or structural engineer expressly transfers or waives these rights through the written contract, including, but not limited to, a written addendum or amendment.

(c) Notwithstanding subdivision (a), if the school district proposes to reuse the plans prepared by the architect or engineer within the school district, the contract entered into between the school district and the architect or engineer shall specify the terms and conditions for the reuse.

(Added by Stats.1996, c. 277 (S.B.1562), §3, operative Jan. 1, 1998. Amended by Stats.2000, c. 348 (A.B.701), §1.)

§17317 Seismic safety inventory of public school buildings; report

(a) The Department of General Services shall, in consultation with the Seismic Safety Commission, conduct an inventory of public school buildings that are concrete tilt-up school buildings and school buildings with nonwood frame walls that do not meet the minimum requirements of the 1976 Uniform Building Code. Priority shall be given to the school buildings identified in the act that added this section that are in the highest seismic risk zones in accordance with the seismic hazard maps of the Division of Mines and Geology of the Department of Conservation.

(b) The Department of General Services shall submit a report by December 31, 2001, to the Legislature and the Governor that summarizes the findings of the seismic safety inventory and makes recommendations about future actions that should be taken to address the problems found by the seismic safety inventory. The report shall not identify individual school sites on which inventoried school buildings are located.

(Added by Stats.1999, c. 622 (A.B.300), §2.)

§17318, 17319 Repealed by Stats. 1996, c. 277 (S.B.1562), §1, operative Jan. 1, 1998

E. FITNESS FOR OCCUPANCY

Education Code

§17365	Legislative findings and declaration
§17366	Legislative intent
§17367	Building examinations; required actions of governing board upon report of unsafe condition
§17368	"School building"
§17369	Buildings excluded from definition of "school building"
§17370	Liability of governing board members
§17371	Limitation on liability of governing board
§17372	Grounds for permitting use of unsafe buildings
§17373	Application for funds for repair, reconstruction or replacement; repayment
§17374	Permitted expenditures for completing corrective measures

§17365 Legislative findings and declaration
The Legislature finds and declares as follows:

(a) By an urgency act (Stats. 1933, Ch. 59), the Legislature at the 1933 General Session established reasonable minimum standards for the design and construction of new school buildings, as now defined in Section 17283. Although it was not required that then existing school buildings incorporate these standards, it was intended by the Legislature that in the intervening years continuous progress would be made in the repair, reconstruction or replacement of such school buildings.

(b) Progress toward this end has been outstanding since 1971 as a result of state funds being made available for rehabilitating or replacing structurally unsafe school facilities.

(Added by Stats.1996, c. 277 (S.B.1562), §3, operative Jan. 1, 1998.)

§17366 Legislative intent
It is the intent of the Legislature to reexamine the progress under this article from time to time. To enable it to do so, and to expedite the provision of safe educational facilities for California schoolchildren, the Legislature intends that the governing board of each school district adopt a plan for the orderly repair, reconstruction, or replacement of school buildings not repaired, reconstructed, or replaced in accordance with this article.

(Added by Stats.1996, c. 277 (S.B.1562), §3, operative Jan. 1, 1998.)

§17367 Building examinations; required actions of governing board upon report of unsafe condition
The governing board of any school district which has in use for school purposes any school buildings which were not constructed under approved plans and the supervision and inspection requirements of Article 3 (commencing with Section 17280) of this chapter shall have such buildings examined pursuant to this section and shall have completed on or before January 1, 1970, the examination, reporting and estimate requirements of this section and Section 39223.

Whenever an examination of the structural condition of any school building of a school district has been made by the Department of General Services, or by any licensed structural engineer or licensed architect for the governing board of the school district, or under the authorization of law, and a report of the examination, including the findings and recommendations of the agency or person making the examination, has been made to the governing board of the district, and the report shows that the building is unsafe for use, the governing board of the district shall immediately have prepared an estimate of the cost necessary to make such repairs to the building or buildings as are necessary, or, if necessary, to reconstruct or replace the building so that the building when repaired or reconstructed, or any building erected to replace it, shall meet such standards of structural safety as are established in accordance with law. The estimate shall be based on current costs and may include other costs to reflect modern educational needs. Also an estimate of the cost of replacement based on the standards established by the State Allocation Board for area per pupil and cost per square foot, shall be made and reported.

The report required by this section shall include a statement that each of the buildings examined is safe or unsafe for school use. For the purpose of this statement the sole consideration shall be protection of life and the prevention of personal injury at a level of safety equivalent to that established by Article 3 (commencing with Section 17280) of this chapter and the rules and regulations adopted there under, disregarding, insofar as possible, such building damage not jeopardizing life which would be expected from one disturbance of nature of the intensity used for design purposes in said rules and regulations.

The governing board, utilizing the information acquired from the examination and report developed pursuant to this section, shall establish a system of priorities for the repair, reconstruction, or replacement of unsafe school buildings.

(Added by Stats.1996, c. 277 (S.B.1562), §3, operative Jan. 1, 1998.)

§17368 "School building"

"School building" as used in this article shall be limited to any physical structure capable of being occupied by pupils, but shall exclude, (a) any bleacher or grandstand with less than six rows of seats, (b) any building which is used exclusively for warehouse, storage, garage, or district wide administrative office purposes, into which pupils are not required to enter, and buildings utilized by adult schools for off-campus, voluntary adult education courses or registered apprentice courses, (c) any swimming pool, or (d) any yard or lighting poles or flagpoles or playground equipment which does not exceed 35 feet in height.

"School building" as used in this article excludes any building owned or occupied by a unified school district, high school district, or a county superintendent of schools which is used exclusively for adult education purposes.

If any building so excluded was not constructed in accordance with Article 3 (commencing with Section 17280) of this chapter and was not repaired, reconstructed, or replaced in accordance with this article, there shall be posted in a conspicuous place on such building a public notice stating that such building does not meet the structural standards imposed by law for earthquake safety.

(Added by Stats.1996, c. 277 (S.B.1562), §3, operative Jan. 1, 1998.)

§17369 Buildings excluded from definition of "school building"

"School building" as used in this article excludes any building operated by an official or board of a public entity for purposes other than educational, notwithstanding any educational use thereof incidental to the other primary purpose. For purposes of this section, a public entity includes, but is not limited to, a city, city and county, county, or special district, but does not include a school district or county superintendent of schools.

(Added by Stats.1996, c. 277(S.B.1562), §3, operative Jan. 1, 1998.)

§17370 Liability of governing board members

Except as provided in Section 17371, nothing in this article shall be construed as relieving any member of the governing board of a school district of any liability for injury to persons or damage to property imposed by law.

(Added by Stats.1996, c. 277 (S.B.1562), §3, operative Jan. 1, 1998.)

§17371 Limitation on liability of governing board

No member of the governing board of a school district shall be held personally liable for injury to persons or damage to property resulting from the fact that a school building was not constructed under the requirements of Article 3 (commencing with Section 17280) of this chapter, if such governing board complies with the provisions of this article. Such limit on liability shall commence when such governing board initiates action to comply with the provisions of Section 17367.

A licensed structural engineer or licensed architect employed by a governing board to examine any school building under this article shall not be held personally liable for injury to persons or damage to property as a result of the structural inadequacy and failure of a building, provided he or she has exercised normal professional diligence in carrying out his or her functions under Article 3 (commencing with Section 39140) of this chapter and the provisions of this article.

(Added by Stats.1996, c. 277 (S.B.1562), §3, operative Jan. 1, 1998.)

§17372 Grounds for permitting use of unsafe buildings

No school building examined and found to be unsafe for school use pursuant to Section 17367 and not repaired or reconstructed in accordance with the provisions of this article, and no school building which has never met the requirements of Article 3 (commencing with Section 17280) of this chapter, shall be used as a school building for elementary or secondary school purposes after June 30, 1975, unless the governing board of the school district has requested and obtained from the State Allocation Board authority for use of the building for a specific period beyond that date. Prior to requesting this authority, the governing board shall adopt a resolution declaring the board's intention to utilize the building as a school building after June 30, 1975, pending its repair, reconstruction, or replacement. The State Allocation Board shall not authorize any school district to use a building beyond June 30, 1975, unless it has first determined that the school district has already proceeded with a plan of total repair, reconstruction, or replacement in a timely manner and a contract has been let for any phase of, and work commenced on, the project. In no event shall the State Allocation Board authorize the use of any unsafe facilities for a period extending beyond the completion of the replacement facilities or beyond June 30, 1977, whichever occurs first.

For purposes of this section, "school building" does not include any portable building. Portable buildings may be used beyond June 30, 1975 to meet temporary housing needs until all repair, reconstruction or replacement of all district school buildings is complete or until June 30, 1977, whichever occurs first, provided that the governing board of the district has requested and obtained from the State Allocation Board authority for use of such portable buildings. The State Allocation Board may grant this authority only to those districts in which 20 percent or more of the schools are subject to partial or complete reconstruction pursuant to Section 17367. Any portable buildings for which authority is granted for temporary use pursuant to this section shall not be subject to Article 3 (commencing with Section 17280) or Article 6 (commencing with Section 17365) of this chapter during the period of the authorized use.

(Added by Stats.1996, c. 277 (S.B.1562), §3, operative Jan. 1, 1998.)

§17373 Application for funds for repair, reconstruction or replacement; repayment

Notwithstanding any other provision of this article or Article 9 (commencing with Section 16310) of Chapter 6 of Part 10, whenever a school district does not have funds available to repair, reconstruct, or replace the school buildings referred to in this article or Section 16320, the school district shall apply for any funds that may be necessary to accomplish the repair, reconstruction, or replacement pursuant to Article 9. The school district shall also accept any funds that are disbursed to the district pursuant to Article 9, whether or not the funds constitute the maximum amount applied for, and shall repay the funds in accordance with Article 9. In cases in which funds derived from a tax increase levied pursuant to Section 39230, as amended by Section 147 of Chapter 36 of the Statutes of 1977, or Section 39230.5, as enacted by Section 2 of Chapter 1010 of the Statutes of 1976, are utilized to match amounts disbursed to a school district under an apportionment made pursuant to Article 9 (commencing with Section 16310) of Chapter 6 of Part 10, the disbursement and repayment may be made without the necessity of a vote of the electorate of the district as prescribed in any provision of Chapter 6 (commencing with Section 16000) of Part 10.

(Added by Stats.1996, c. 277 (S.B.1562), §3, operative Jan. 1, 1998.)

§17374 Permitted expenditures for completing corrective measures

Any revenue derived from an increase in the rate of tax provided by Section 39230, as amended by Section 147 of Chapter 36 of the Statutes of 1977, prior to July 1, 1975, and which is unexpended on that date, may be used after July 1, 1975, by the governing board of a school district to complete the corrective structural repair, reconstruction, or replacement of any school building subject to Section 17367 which had not been completed on that date.

(Added by Stats.1996, c. 277 (S.B. 1562), §3, operative Jan. 1, 1998.)

F. STATE-FUNDED SERVICES

Education Code

§67310 Legislative findings, declarations and intent, equal access to public postsecondary education; other resources; accountability and evaluation

§67310 Legislative findings, declarations and intent, equal access to public postsecondary education; other resources; accountability and evaluation

(a) The Legislature finds and declares that equal access to public postsecondary education is essential for the full integration of persons with disabilities into the social, political, and economic mainstream of California. The Legislature recognizes the historic under representation of disabled students in postsecondary programs and the need for equitable efforts that enhance the enrollment and retention of disabled students in public colleges and universities in California.

(b) The Legislature recognizes its responsibility to provide and adequately fund postsecondary programs and services for disabled students attending a public postsecondary institution.

(c) To meet this responsibility, the Legislature sets forth the following principles for public postsecondary institutions and budgetary control agencies to observe in providing postsecondary programs and services for students with disabilities:

(1) The state funded activity shall be consistent with the stated purpose of programs and services for disabled students provided by the California Community Colleges, the California State University, or the University of California, as governed by the statutes, regulations, and guidelines of the community colleges, state university, or the University of California.

(2) The state funded activity shall not duplicate services or instruction that are available to all students, either on campus or in the community.

(3) The state funded activity shall be directly related to the functional limitations of the verifiable disabilities of the students to be served.

(4) The state funded activity shall be directly related to these students' full access to and participation in the educational process.

(5) The state funded activity shall have as its goals the independence of disabled students and the maximum integration of these students with other students.

(6) The state funded activity shall be provided in the most integrated setting possible, consistent with state and federal law, state policy and funding requirements, and missions and policies of the postsecondary segment, and shall be based on identified student needs.

(d) It is the intent of the Legislature that, through the state budget process, the public postsecondary institutions request, and the state provide, funds to cover the actual cost of providing services and instruction, consistent with the principles set forth in subdivision (c) to disabled students in their respective postsecondary institutions.

(e) All public postsecondary education institutions shall continue to utilize other available resources to support programs and services for disabled students as well as maintain their current level of funding from other sources whenever possible.

(f) Pursuant to Section 67312, postsecondary institutions shall demonstrate institutional accountability and clear program effectiveness evaluations for services to students with disabilities.

(Added by Stats. 1995, c. 758 (A.B.446), § 54.)

G. APPROVAL

Education Code

§81130	Supervision of design, construction and fire damage repair by Department of General Services
§81130.3	Short Title
§81130.5	Offsite buildings; school building; construction or alteration
§81130.6	Damage caused by natural disasters; repairs, alterations, or reconstruction; expedited review and approval process; time limitations
§81131	Repealed
§81131.5 to 81132	Repealed
§81133	Approval or rejection; examination; safety; complete plans; cost estimate; filing fee; contract validity; compliance with article
§81133.5	Construction work on community colleges; issuance of stop work orders; liability
§81134	Methods to ensure complete application
§81135	Contracts with qualified plan review firms
§81136	Referral of documents to qualified plan review firm
§81137	Repealed
§81138	Preparers of plans, specifications, and estimates; qualifications; observatory of construction
§81140	Repealed
§81141	Reports required of architects, engineers, and inspectors; information required
§81142	Rules and regulations; building standards
§81143	Inspections by Department of General Services and appointed inspector
§81144	Violations and fraudulent false statements
§81146	Approval of public school building for occupation by Department of General Services deemed to meet local building requirements for use as a private school
§81147	Certificates of compliance verified reports
§81149	Purchase of offsite building or facility for school; conditions

§81130 Supervision of design, construction and fire damage repair by Department of General Services

(a) The Department of General Services under the police power of the state shall supervise the design and construction of any school building or the reconstruction or alteration of, or addition to, any school building, if not exempted under Section 81133, to ensure that plans and specifications comply with the rules and regulations adopted pursuant to this article and building standards published in Title 24 of the California Code of Regulations, and to ensure that the work of construction has been performed in accordance with the approved plans and specifications, for the protection of life and property. Nothing in this section shall be construed to allow a community college district to perform work with its own forces in excess of the limitations set forth in Article 41 (commencing with Section 20650) of Part 3 of Division 2 of the Public Contract Code.

(b) Whenever repairs due to fire damage must be made to any school building previously approved by the Department of General Services, the approved plans and specifications used in the original work under then existing rules, regulations, and building standards may be used without modification, providing all other provisions of this article are carried out.

(Amended by Stats.1990, c. 1372 (S.B.1854), §544; Stats.1997, c.390 (A.B.611), §3, eff. Aug. 27, 1997.)

§81130.3 Short title

This article, together with Article 3 (commencing with Section 17280 and Article 6 (commencing with Section 17365 of Chapter 2 of Part 23, shall be known and may be cited as the "Field Act."

(Added by Stats.1992, c. 341 (S.B. 1612) §9.)

§81130.5 Offsite buildings; school building; construction or alteration

(a) This article does not apply to an offsite building during the time the building is used wholly or in part for community college purposes, if the building is neither owned by a community college district nor leased by a community college district under a lease containing an option to purchase that building. For the purposes of this

section, an "offsite building" is a building that is situated on land which is neither owned by a community college district nor leased by a community college district under a lease containing an option to purchase the land.

(b) "School building," as used in this article, means and includes any building used, or designed to be used, for community college purposes and constructed, reconstructed, altered, or added to, by the state or by any city or city and county, by any political subdivision, by any district of any kind within the state, by any regional occupational center or program created by or authorized to act by an agreement under joint exercise of power, or by the United States government, or any agency thereof.

(c) Where the primary use of either a building or complex within which the building is situated, operated by an official or board of a city, city and county, or county, is for purposes other than educational, such as, but not limited to, correctional, forestry, or hospital purposes, the building shall not be considered to be a "school building" as defined in this section, notwithstanding any educational use thereof incidental to the primary purpose.

(d) For the purposes of this article and Article 8 (commencing with Section 81160), "school building" does not include any of the following:

(1) Any building of a community college district that is used solely for classes or programs in outdoor science, conservation, and forestry and that does not occupy, in whole or in part, the same parcel of land upon which there is situated any school maintained by the district.

(2) Agricultural facilities that were not built for classroom purposes and that are used primarily for plant and animal production or the storage of materials, equipment, and supplies involved in that production.

(3) Animal kennels and facilities used to house animals as part of an animal health instruction program.

(e) "Construction or alteration," as used in this article, includes any construction, reconstruction, or alteration of, or addition to, any school building.

(Amended by Stats.1990, c. 1372 (S.B.1854), §545; Stats.1995, c. 758 (A.B.446), §110.)

§81130.6 Damage caused by natural disasters; repairs, alterations, or reconstruction; expedited review and approval process; time limitations

(a) It is the intent of the Legislature to expedite the repair, alteration, and reconstruction of community college facilities that have been damaged or destroyed by fire, earthquake, flood, or other manmade or natural disasters, to return those community college facilities to a condition that makes them useful to community college districts in the least amount of time and at the lowest appropriate cost while maintaining the integrity and safety of the structure as required by the laws of this state.

(b) Notwithstanding any other law, if a community college has been damaged or destroyed by fire, earthquake, flood, or other manmade or natural disaster, all reviews or approvals required by this article shall be expedited. In no event shall any review or approval exceed 60 days, excluding weekends and holidays, from the date of receipt of all complete plans, specifications, and documentation for the facilities from the district.

(c) If, upon review, the plans or specifications require minor amendment or modification, these minor amendments or modifications shall not delay the completion of the review or approval beyond the 60-day requirement specified in subdivision (b) unless the amendment or modification constitutes a major substantive change affecting the entire project. While any minor amendments or modifications are being undertaken, the remainder of the project shall continue under review so that a timely and adequate review may be completed within the 60-day requirement of subdivision (b).

(d) A state agency that is required to perform any review or approval under this article may hire additional personnel or incur any additional costs necessary to perform the review or approval within the time limits set forth in this section and shall charge the district a fee not to exceed the actual cost of the review or approval.

(e) As used in this section, "damaged" means damages to the extent that occupancy is precluded based upon a report of an architect or a structural engineer and the concurrence of the Department of General Services in the report's conclusion that the occupancy of the premises is precluded.

(f) The expedited review and approval required by this section shall not apply if the documents are not submitted within six months of the damage to, or destruction of, the facilities.

(Added by Stats.1995-96, 1st Ex.Sess., c. 7 (S.B.1854), §2, eff. Oct, 10, 1995.)

§81131 Repealed by Stats.1990, c. 1372 (S.B. 1854), §546

§81131.5 – 81132 Repealed by Stats.1990, c. 1372 (S.B. 1854), §547-549

§81133 Approval or rejection; examination; safety; complete plans; cost estimate; filing fee; contract validity; compliance with article

(a) The Department of General Services shall pass upon and approve or reject all plans for the construction or, if the estimated cost exceeds twenty-five thousand dollars ($25,000), the alteration of any school building. To enable it to do so, the governing board of each community college district and any other school authority before adopting any plans for the school building shall submit the plans to the Department of General Services for approval, and shall pay the fees prescribed in this article.

(b) Notwithstanding subdivision (a) where the estimated cost of reconstruction or alteration of, or addition to, a school building exceeds twenty-five thousand dollars ($25,000), but does not exceed one hundred thousand dollars ($100,000), a licensed structural engineer shall examine the proposed project to determine if it is a nonstructural alteration or a structural alteration. If he or she determines that the project is a nonstructural alteration, he or she shall prepare a statement so indicating. If he or she determines that the project is structural, he or she shall prepare plans and specifications for the project which shall be submitted to the Department of General Services for review and approval. A copy of the engineer's report stating that the work does not affect structural elements shall be filed with the Department of General Services.

(c) If a licensed structural engineer submits a report to the Department of General Services stating that the plans or activities authorized pursuant to subdivision (b) do not involve structural elements, then all of the following shall apply to that project:

(1) The design professional in responsible charge of the project undertaken pursuant to this subdivision shall certify that the plans and specifications for the project meet any applicable fire and life safety standards, and do not affect the disabled access requirements of Section 4450 of the Government Code, and shall submit this certification to the department. The letter of certification shall bear the identifying licensing stamp or seal of the design professional. This provision does not preclude a design professional from submitting plans and specifications to the department along with the appropriate fee for review.

(2) Within 10 days of the completion of any project authorized pursuant to subdivision (b), the school construction inspector of record on the project, who is certified by the department to inspect school buildings, shall certify in writing to the department that the reconstruction, alteration, or addition has been completed in compliance with the plans and specifications.

(3) The dollar amounts cited in this section shall be increased on an annual basis, commencing January 1, 1999, by the department according to an inflationary index governing construction costs that is selected and recognized by the department.

(4) No school district shall subdivide a project for the purpose of evading the limitation on amounts cited in this section.

(5) Before letting any contract for any construction or alteration of any school building, the written approval of the plans, as to safety of design and construction, by the Department of General Services, shall first be had and obtained.

(6) In each case the application for approval of the plans shall be accompanied by the plans and full, complete, and accurate specifications, and structural design computations, and estimates of cost, which shall comply in every respect with any and all requirements prescribed by the Department of General Services.

(7) The application shall be accompanied by a filing fee in amounts as determined by the Department of General Services based on the estimated cost according to the following schedule:

(A) For the first one million dollars ($1,000,000), a fee of not more than 0.7 percent of the estimated cost.

(B) For all costs in excess of one million dollars ($1,000,000), a fee of not more than 0.6 percent of the estimated cost.

The minimum fee in any case shall be two hundred fifty dollars ($250). If the actual cost exceeds the estimated cost by more than 5 percent, a further fee shall be paid to the Department of General Services, based on the above schedule and computed on the amount by which the actual cost exceeds the amount of the estimated cost.

(8) All fees shall be paid into the State Treasury and credited to the Division of Architecture Public Building Fund, which fund is continued in existence and is retitled the Architecture Public Building Fund, and are continuously appropriated, without regard to fiscal years, for the use of the Department of General Services, subject to approval of the Department of Finance, in carrying out the provisions of this article.

Adjustments in the amounts of the fees, as determined by the Department of General Services and approved by the Department of Finance, shall be made within the limits set in subdivision (j) in order to maintain a reasonable working balance in the fund.

(9) No contract for the construction or alteration of any school building, made or executed by the governing board of any community college district or other public board, body, or officer otherwise vested with authority to make or execute this contract, is valid, and no public money shall be paid for any work done under this contract or for any labor or materials furnished in constructing or altering the building, unless the plans, specifications, and estimates comply in every particular with the provisions of this article and the requirements prescribed by the Department of General Services and unless the approval thereof in writing has first been had and obtained from the Department of General Services.

(d) For purposes of this section, "design professional in responsible charge" or "design professional" means the licensed architect, licensed structural engineer, or licensed civil engineer who is responsible for the completion of the design work involved with the project.

(Amended by Stats.1990, c. 1372 (S.B.1854), §550; Stats.1997, c. 390(A.B.611), §4, eff.Aug.27, 1997.)

§81133.5 Construction work on community colleges; issuance of stop work orders; liability

(a) Notwithstanding any provision of law to the contrary, including, but not limited to, Title 15 (commencing with Section 3082) of Part 4 of the Civil Code, the Department of General Services may issue a stop work order when construction work on a community college is not being performed in accordance with existing law and would compromise the structural integrity of the building, thereby endangering the public safety. The Department of General Services shall allow construction of incidental and minor nonstructural additions or nonstructural alterations without invoking its stop work authority.

(b) A community college district or other public board, body, or officer whose construction work on a community college is subject to a stop work order issued pursuant to subdivision (a) shall not be held liable in any action filed against the public board, body, or officer for stopping work as required by the stop work order, or for any delays caused by compliance with the stop work order, except to the extent that an error or omission by the public board, body, or officer is that basis for the issuance of the stop work order.

(Added by Stats.2000, c. 463 (A.B. 2791), §2.)

§81134 Methods to ensure complete application

(a) The Department of General Services shall establish one or more methods to ensure that each application has been completed sufficiently by the applicant to enable the plan review to be performed.

(b) Upon receipt of a complete application, the Department of General Services shall inform the applicant of the period of time that it anticipates to elapse prior to commencing review of the applicant's plans. Within 10 days of being so notified, the applicant shall make an election to either use the Department of General Services for the review of the applicant's plans or, request the plan review be performed by one or more qualified plan review firms pursuant to Sections 81135 and 81136. If the applicant elects to use the services of the Department of General Services for review of the applicant's plans, the department shall, as necessary to expedite review of the applicant's plans do one or more of the following:

(1) Contract for assistance from one or more qualified plan review firms pursuant to Sections 81135 and 81136.

(2) Employ additional staff on a temporary basis.

(3) Maximize the use of department staff through the use of overtime or other appropriate means.

(4) Any other action determined by the department to have the effect of expediting the review and approval process.

(c) Each application shall identify, for purposes of receiving the notifications required under this subdivision, an employee of the applicant community college district and either the applicant's architect or structural engineer. The Department of General Services immediately shall notify that employee, and the identified architect or structural engineer, when each of the following steps in the plan review process occurs:

(1) The department requests the applicant's architect or structural engineer to correct or complete any part of the application.

(2) An application number is assigned to the application.

(3) Review of the applicant's plans is commenced.

(4) Review of the applicant's plans is completed and the department returns the plans to the architect or structural engineer for correction.

(5) Corrected plans are returned to the department by the applicant's architect or structural engineer for final review and approval.

(6) The department approves the plans and causes a final record set of the plans to be printed in accordance with Section 17304.

(d) The Department of General Services may provide additional notifications to applicants as it deems necessary.

(Added by Stats.1998, c. 407 (S.B.50), §13, eff. Aug. 27, 1998.)

§81135 Contracts with qualified plan review firms

(a) Notwithstanding Section 14952 of the Government Code, the Department of General Services shall contract with sufficient numbers of qualified plan review firms for assistance in performing the plan review required under this article or Article 5 (commencing with Section 17350).

(b) For purposes of this article, "qualified plan review firm" means an individual, firm, or the building official of a city, county, or city and county, as defined in Section 18949.27 of the Health and Safety Code or the authorized representative of that building official that is identified by the Department of General Services as having appropriate expertise and knowledge of the requirements that apply to school buildings under this article. The

department shall establish and maintain a list of the individuals firms, and building officials or the authorized representatives of building officials so identified, and shall make that list available, upon request, to community college districts and other interested parties.

(Added by Stats.1998, c. 407 (S.B.50), §14, eff. Aug.27, 1998.)

§81136 Referral of documents to qualified plan review firm

(a) Upon submitting a complete application for review under this article, the applicant may request that the Department of General Services refer the documents necessary for the review of that application to a qualified plan review firm operating under contract with the department pursuant to Section 81135. The department immediately shall grant the request and refer the necessary documents to a qualified plan review firm if the applicant so requests. Upon completing the review, the qualified plan review firm shall submit the documents referred to it for the review of the application, together with the results of its review, to the Department of General Services.

(b) The Department of General Services shall establish a procedure governing the use by applicants of the review process alternative described in this section, including, but not limited to, provisions restricting the use of qualified plan review firms on the basis of conflict of interest.

(Added by Stats.1998, c. 407 (S.B.50), §15, eff. Aug.27, 1998.)

§81137 Repealed by Stats.1990, c. 1372 (S.B.1854), §554

§81138 Preparers of plans, specifications, and estimates; qualifications; observatory of construction

(a) Except as provided in subdivision (b), all plans, specifications, and estimates shall be prepared by a licensed architect holding a valid certificate under Chapter 3 (commencing with Section 5500) of Division 3 of the Business and Professions Code or by a structural engineer holding a valid certificate to use the title structural engineer under Chapter 7 (commencing with Section 6700) of Division 3 of the Business and Professions Code, and the observation of the work of construction shall be under the responsible charge of such an architect or structural engineer.

(b) For the purposes of this section, a mechanical or electrical engineer holding a valid certificate under Chapter 7 (commencing with Section 6700) of Division 3 of the Business and Professions Code may be in responsible charge of preparation of plans, specifications, and estimates, and observation of the work of construction where the work is, as determined by the Department of General Services, of the kind normally performed by engineers certified in the particular branch of engineering for which the engineer is certified. Any architectural or structural work involved shall be the respective responsibility of a licensed architect holding a valid certificate under Chapter 3 (commencing with Section 5500) of Division 3 of the Business and Professions Code, or a structural engineer holding a valid certificate to use the title structural engineer under Chapter 7 (commencing with Section 6700) of Division 3 of the Business and Professions Code.

(Stats.1976, c. 1010, §2, operative April 30, 1977. Amended by Stats. 1982, c. 735, p. 2921, §3.)

§81140 Repealed by Stats.1990, c. 1372 (S.B.1854), §555

§81141 Reports required of architects, engineers, and inspectors; information required

From time to time, as the work of construction or alteration progresses and whenever the Department of General Services requires, the licensed architect or structural engineer in charge of observation of construction or registered engineer in charge of observation of other work, the inspector on the work, and the contractor shall each make to the Department of General Services a report, duly verified by him or her, upon a form prescribed by the Department of General Services, based upon his or her own personal knowledge, indicating that the work during the period covered by the report has been performed and materials have been used and installed, in every material respect, in compliance with the approved plans and specifications, setting forth detailed statements of fact that are required by the Department of General Services.

"Personal knowledge," as used in this section and as applied to the architect and the registered engineer, means the personal knowledge that is obtained from periodic visits to the project site of reasonable frequency for the purpose of general observation of the work, and also that is obtained from the reporting of others as to the

progress of the work, testing of materials, inspection and superintendence of the work that is performed between the above-mentioned periodic visits of the architect or the registered engineer. The exercise of reasonable diligence to obtain the facts is required.

"Personal knowledge," as applied to the inspector, means the actual personal knowledge that is obtained from his or her personal, continuous inspection of the work of construction in all stages of its progress at the site where he or she is responsible for inspection and, when work is carried out away from the site, personal knowledge that is obtained from the reporting of others on the testing or inspection of materials and workmanship for compliance with plans, specifications, or applicable standards. The exercise of reasonable diligence to obtain the facts is required.

"Personal knowledge," as applied to the contractor, means the personal knowledge that is obtained from the construction of the building. The exercise of reasonable diligence to obtain the facts is required.

(Amended by Stats.1995, c. 758 (A.B.446), §111.)

§81142 Rules and regulations; building standards
Except as provided in Section 18930 of the Health and Safety Code, the Department of General Services may from time to time make such rules and regulations as it deems necessary, proper, or suitable to carry out the provisions of this article.

The Department of General Services shall adopt and submit building standards for approval pursuant to Chapter 4 (commencing with Section 18935) of Part 2.5 of Division 13 of the Health and Safety Code for the purposes described in this article.

(Stats.1976, c. 1010, §2, operative April 30, 1977. Amended by Stats. 1979, c. 1152, p. 4226, §8.)

§81143 Inspections by Department of General Services and appointed inspector
The State Department of General Services shall make such inspection of the school buildings and of the work of construction or alteration as in its judgment is necessary or proper for the enforcement of this article and the protection of the safety of the students, the instructors, and the public. The community college district, city, city and county, or the political subdivision within the jurisdiction of which any school building is constructed or altered shall provide for and require competent, adequate, and continuous inspection during construction or alteration by an inspector satisfactory to the architect or structural engineer and the Department of General Services. The inspector shall act under the direction of the architect or structural engineer as the board may direct, and be responsible to the governing board.

(Stats.1976, c. 1010, §2, operative April 30, 1977.)

§81144 Violations and fraudulent false statements
Any person who knowingly violates any of the provisions of this article or fraudulently makes any false statement in any verified report or affidavit required pursuant to this article, is guilty of a felony.

(Stats.1976, c. 1010, §2, operative April 30, 1977. Amended by Stats.981, c. 470, p.1767, §219.)

§81146 Approval of public school building for occupation by Department of General Services deemed to meet local building requirements for use as a private school
Any public school building which has been approved by the Department of General Services for occupancy shall be deemed to meet the local building requirements for use as a private school.

(Stats.1976, c. 1010, §2, operative April 30, 1977.)

§81147 Certificates of compliance verified reports
(a) When a school building constructed in accordance with plans and specifications approved by the Department of General Services is completed, the notice of completion is filed, and all final verified reports and all testing and inspection documents, as required by this article or as required by the rules and regulations adopted pursuant to this article, are submitted to and on file with the Department of General Services, and all required fees paid by the community college district, the department shall issue a certification that the school building complies with the

requirements of this article. Nothing in this article shall prevent beneficial occupancy by a community college district prior to the issuance of this certification.

(b) When a school building, constructed in accordance with approved plans and specifications, is completed but final verified reports, as are required under Section 81141, have not been submitted to the Department of General Services due to the incapacitating illness, death, or the default of any persons required to file such reports, the Department of General Services shall, upon written request of the community college district, review all of the project records and make such examinations as it deems necessary to enable it to certify that the school building otherwise complies with the requirements of this article. The Department of General Services may request the community college district to have made, reported, and verified any other tests and inspections which the department deems necessary to complete its examinations of the construction.

(c) The costs incurred by the Department of General Services in connection with this section shall be paid by the community college district. The actual costs to perform the examinations, tests, and inspections shall be an appropriate cost of the project to be paid from the building funds of the district. Certification of the project by the Department of General Services shall be withheld until all the costs have been paid by the community college district.

(d) This section shall not relieve any individual of his or her responsibility to file verified reports, as required in Section 81141, or any other documents required by the rules and regulations adopted pursuant to this article. This section shall not abrogate the provisions of Section 81144.

(Added by Stats.1982, c. 73, p. 2921, §4.)

§81149 Purchase of offsite building or facility for school; conditions

(a) Notwithstanding any provision of law, a community college district may acquire for use any facility previously used by the United States military and closed as a result of action by the federal Defense Base Closure and Realignment Commission, or purchase any offsite building constructed prior to January 1, 1998 that meets the structural requirements of the 1976 Uniform Building Code, or subsequent additions to that code, but that does not meet the requirements of Section 81130, for use as a school building, as defined in Section 81130.5, if the governing board of the district finds that all of the following conditions have been met:

(1) A structural engineer has inspected the building or facility and submitted a report to the governing board of the community college district that certifies that the building or facility is in substantial compliance with the requirements of this article, or describes in detail any structural modifications necessary to render the building or facility in substantial compliance with this article.

For purposes of this section, substantial compliance with this article means that the building or facility is likely to resist, without catastrophic collapse, earthquake forces generated by major earthquakes of the intensity and severity of the strongest experienced in California, but may experience some reparable architectural or structural damage. This requirement is satisfied if the structural engineer affixes his or her seal of approval to the report and he or she attests in that report that to the best of his or her knowledge:

(A) He or she has reviewed the design calculations, construction documents, and the local government construction inspection records of the building or facility, to the extent those items are available.

(B) He or she has authorized testing and has observed or reviewed the test results and the inspections of an adequate sample of the structure's welds, anchor bolts, and other structural elements.

(C) He or she has observed that the nonstructural elements, including, but not limited to, light fixtures, heating, and air-conditioning diffusers are adequately braced or anchored.

(2) The governing board of the community college district shall forward the report submitted pursuant to paragraph (1) to the Department of General Services for its review. Within 45 working days, the Department of General Services shall review the report for compliance with the above requirements, to provide feedback to the structural engineer regarding any insufficiencies with the report, and to determine whether or not the

building or facility is in substantial compliance with the requirements of this article, or whether any proposed structural modifications will render the structure in substantial compliance with this article. If the Department of General Services does not respond within 45 working days of the submission of the final and complete report, the department will be deemed to have concurred with the structural engineer's report. If structural modifications are necessary to achieve substantial compliance with this article, plans shall be submitted to the department for review and approval. Construction shall be completed in compliance with the continuous inspection requirements of this article.

(b) **(1)** No member of the governing board of a community college district, and no employee of a community college district, shall be held personally liable for injury to persons or damage to property resulting from the fact that the governing board of the community college district purchased a building or facility pursuant to this subdivision for a school and the building or facility was not constructed pursuant to the requirements of Section 81130.

(2) The exemption from personal liability for members of the governing board and employees of a community college district described in paragraph (1) does not limit the liability of the community college district for injury to persons or damage to property resulting from the fact that the governing board or any employee of the community college district used a building or facility pursuant to this subdivision for a school if the building or facility was not constructed pursuant to the requirements of Section 81130. The exemption from personal liability for members of the governing board and employees of a community college district described in paragraph (1) does not limit the liability of the community college district, the governing board, or the district's employees pursuant to Section 835 of the Government Code.

(3) Section 81144 is not applicable to a person who, pursuant to this section, purchases a building or facility that meets the requirements of this section but does not meet the requirements of Section 81130. Approval and use of a building or facility pursuant to this section does not violate this article.

(Added by Stats.1998, c. 610 (A.B.425), §1. Amended by Stats. 1999, c. 179 (A.B.861), §1.)

2. PRIVATELY FUNDED BUILDINGS AND FACILITIES

A. ACCESS TO PLACES OF PUBLIC AMUSEMENT AND RESORT BY PHYSICALLY HANDICAPPED PERSONS

Health and Safety Code

§19952	Seating or accommodations in various locations within facility; removable seats; application; construction
§19953	Injunction; attorney's fees
§19954	Injunctions; persons who may bring action
19954.5	Mandatory service on State Solicitor General of Each party's brief or petition and brief causes of action based on violation of civil rights statutes

§19952 Seating or accommodations in various locations within facility; removable seats; application; construction

(a) Any person, or public or private firm, organization, or corporation, who owns or manages places of public amusement and resort including theaters, concert halls, and stadiums shall provide seating or accommodations for physically disabled persons in a variety of locations within the facility, to the extent that this variety can be provided while meeting fire and panic safety requirements of the State Fire Marshal, so as to provide these persons a choice of admission prices otherwise available to members of the general public.

(b) Readily removable seats may be installed in wheelchair spaces when the spaces are not required to accommodate wheelchair users.

(c) The requirements of this section shall apply with respect to publicly and privately owned facilities or structures for the purposes specified in subdivision (a) for which a building permit or a building plan for new construction has been issued on or after January 1, 1985.

(d) In no case shall this section be construed to prescribe a lesser standard of accessibility or usability than provided by the Accessibility Guidelines prepared by the federal Access Board and adopted by the United States Department of Justice to implement the Americans with Disabilities Act of 1990 (Public Law 101-336).

(Added by Stats.1983, c. 781 §1. Amended by Stats.1992, c. 913 (A.B 1077) §35; Stats.1993, c. 1214 (A.B. 551) §6.)

§19953 Injunctions; attorney fees

Any person who is aggrieved or potentially aggrieved by a violation of this part, Chapter 7 (commencing with Section 4450) of Division 5 of Title 1 of the Government Code, or Part 5.5 (Commencing with Section 19955) of Division 13 of the Health and Safety Code may bring an action to enjoin the violation. The prevailing party in the action shall be entitled to recover reasonable attorney's fees.

(Added by Stats.1983, c. 781 §1.)

§19954 Injunctions; persons who may bring action

The district attorney, the city attorney, the Department of Rehabilitation acting through the Attorney General, or the Attorney General may bring an action to enjoin any violation of this part.

(Added by Stats.1983, c. 781 §1.)

19954.5 Mandatory service on State Solicitor General of Each party's brief or petition and brief causes of action based on violation of civil rights statutes

If a violation of Section 19952, 19953, or 19954 is alleged or the application or construction of any of these sections is in issue in any proceeding in the Supreme Court of California, a state court of appeal, or the appellate division of a superior court, each party shall serve a copy of the party's brief or petition and brief, on the State Solicitor General at the Office of the Attorney General. No brief may be accepted for filing unless the proof of service shows service on the State Solicitor General. Any party failing to comply with this requirement shall be given a reasonable opportunity to cure the failure before the court imposes any sanction and, in that instance, the court shall allow the Attorney General reasonable additional time to file a brief in the matter.

(Added by Stats. 2002, c. 244 (A.B.2524),§ 4.)

B. ACCESS TO PUBLIC ACCOMMODATIONS BY PHYSICALLY HANDICAPPED PERSONS

Health and Safety Code

§19955	Purpose
§19955.3	Definitions
§19955.5	Access to passenger vehicle service stations, shopping centers, physicians' and surgeons' offices, and office buildings constructed with private funds; prospective application of section
§19956	Conformity with Government Code provisions; exceptions
§19956.5	Public curb or sidewalk constructed with private funds
§19957	Exceptions from literal requirements of standards and specifications in hardship, etc., cases
§19957.5	Local appeals board; jurisdiction; members; duties
§19958	Enforcement; building department defined
§19958.5	Violations; injunction; district or city attorney, attorney general
§19959	Alteration of existing public accommodations
19959.5	Mandatory service on State Solicitor General of each party's brief or petition and brief in causes of action based on violation of civil rights statutes

§19955 Purpose

(a) The purpose of this part is to insure that public accommodations or facilities constructed in this state with private funds adhere to the provisions of Chapter 7 (commencing with Section 4450) of Division 5 of Title 1 of the Government Code. For the purposes of this part "public accommodation or facilities" means a building, structure, facility, complex, or improved area which is used by the general public and shall include auditoriums, hospitals, theaters, restaurants, hotels, motels, stadiums, and convention centers.

As used in this section, "hospitals" includes, but is not limited to, hospitals, nursing homes, and convalescent homes.

When sanitary facilities are made available for the public, clients, or employees in such accommodations or facilities, they shall be made available for the physically handicapped.

Any new requirements imposed by the amendments to this section enacted by the Legislature at its 1973-74 Regular Session shall only apply to public accommodations or facilities constructed on or after the effective day of the amendments.

(Added by Stats.1969, c. 1560 §1, operative July 1, 1970. Amended by Stats.1971, c. 821 §1; Stats.1972, c. 488 §1; Stats.1973, c. 931 §1, effective September 30, 1973.)

§19955.3 Definitions

As used in this part:

(a) "Story" means that portion of a building included between the upper surface of any floor and the upper surface of the floor next above, except that the topmost story shall be that portion of a building included between the upper surface of the topmost floor and the ceiling or roof above. If the finished floor level directly above a basement or unused under-floor space is more than six feet above grade for more than 50 percent of the total perimeter or is more than 12 feet above grade at any point, the basement or unused under-floor space shall be considered as a story.

(b) "First story" means the lowest story in a building which qualifies as a story and which provides the basic services or functions for which the building is used. A floor level in a building having only one floor level shall be classified as a first story, if the floor level is not more than four feet below grade, for more than 50 percent of the total perimeter, or more than eight feet below grade at any point.

(c) "Mezzanine" means an intermediate floor placed in any story or room. When the total area of any "mezzanine floor" exceeds 33 1/3 percent of the total floor area in that room, it shall be considered as constituting

an additional "story". The clear height above and below a "mezzanine floor" construction shall be not less than seven feet.

(d) "Grade" means the lowest point of elevation of the finished surface of the ground, paving, or sidewalk within the area between the building and the property line or, when the property line is more than five feet from the building, between the building and a line five feet from the building.

(Added by Stats.1982, c. 1416 §1.)

§19955.5 Access to passenger vehicle service stations, shopping centers, physicians' and surgeons' offices, and office buildings constructed with private funds; prospective application of section
All passenger vehicle service stations, shopping centers, offices of physicians and surgeons, and office buildings constructed in this state with private funds shall adhere to the provisions of Chapter 7 (commencing with Section 4450) of Division 5 of Title 1 of the Government Code. As used in this section, "office building" means a structure wherein commercial activity or service is performed or a profession is practiced, or wherein any combination thereof is performed or practiced in all or the majority of the building or structure.

When sanitary facilities are made available for the public, clients, or employees in these stations, centers, or buildings, they shall be made available for persons with disabilities.

Any new requirements imposed by the amendments to this section by Chapter 931 of the Statutes of 1973 shall only apply to those stations, centers, or office buildings constructed on or after September 30, 1973. Any other new requirements imposed by amendments to this section by Chapter 995 of the Statutes of 1974 shall only apply to those offices or office buildings constructed on or after January 1, 1975.

(Added by Stats.1971, c. 821 §2. Amended by Stats.1973, c. 931 §2, effective September 30, 1973; Stats.1974, c. 995 §4; Stats.1982, c. 1416 §2; Stats.1993, c. 1220 (A.B.1138), §3.)

§19956 Conformity with Government Code provisions; exceptions
All public accommodations constructed in this state shall conform to the provisions of Chapter 7 (commencing with Section 4450) of Division 5 of Title 1 of the Government Code. However, the following types of privately funded multistory buildings do not require accessibility by ramp or elevator above and below the first floor:

(a) Multistoried office buildings, other than the professional office of a health care provider, and passenger vehicle service stations less than three stories high, or less than 3,000 square feet per story.

(b) Any other privately funded multistoried building that is not a shopping center, shopping mall, or the professional office of a health care provider, and that is less than three stories high or less than 3,000 square feet per story if a reasonable portion of all facilities and accommodations normally sought and used by the public in such a building are accessible to and usable by persons with disabilities.

(Added by Stats.1969, c. 1560 §1, operative July 1, 1970. Amended by Stats.1982, c. 1416 §3; Stats.1993, c. 1220 (A.B.1138) §4.)

§19956.5 Public curb or sidewalk constructed with private funds
Any curb or sidewalk intended for public use that is constructed in this state with private funds shall conform to the provisions of Chapter 7 (commencing with Section 4450) of Division 5 of Title 1 of the Government Code.

This section shall apply, but not be limited in application, to any curb or sidewalk which after construction with private funds will be turned over to a city or county for public use, in order to provide full and easy access to, and use of, such curb or sidewalk by the physically handicapped.

(Added by Stats.1972, p. 1889, c. 1018, §1.)

§19957 Exceptions from literal requirements of standards and specifications in hardship, etc., cases
In cases of practical difficulty, unnecessary hardship, or extreme differences, a building department responsible for the enforcement of this part may grant exceptions from the literal requirements of the standards and

specifications required by this part or permit the use of other methods or materials, but only when it is clearly evident that equivalent facilitation and protection are thereby secured.

(Added by Stats.1969, c. 1560, p. 3166, §1, operative July 1, 1970.)

§19957.5 Local appeals board; jurisdiction; members; duties

(a) Every city, county, or city and county may appoint a local appeals board composed of five members to hear written appeals brought by any person regarding action taken by the building department of the city, county, or city and county in enforcement of the requirements of this part including the exceptions contained in Section 19957.

(b) Two members of the appeals board shall be physically handicapped persons, two members shall be persons experienced in construction, and one member shall be a public member.

(c) The appeals board shall conduct hearings on written appeals made under Subdivision (a) and may approve or disapprove interpretations of this part and enforcement actions taken by the building department of the city, county, or city and county. All such approvals or disapprovals shall be final and conclusive as to the building department in the absence of fraud or prejudicial abuse of discretion. The appeals board shall adopt regulations establishing procedural rules and criteria for the carrying out of its duties under this part.

(Added by Stats.1976, c. 700, p.1714, §1.)

§19958 Enforcement; building department defined

The building department of every city, county, or city and county shall enforce this part within the territorial area of its city, county, or city and county. The responsibility for enforcing Chapter 7 (commencing with Section 4450) of Division 5 of Title 1 of the Government Code in its application under this part shall be by such building department within the territorial area of its city, county, or city and county.

"Building department" means the department, bureau, or officer charged with the enforcement of laws or ordinances regulating the erection or construction, or both the erection and construction, or buildings.

(Added by Stats.1969, c. 1560, p.3166, §1, operative July 1, 1970.)

§19958.5 Violations; injunction; district or city attorney, attorney general

The district attorney, the city attorney, the Department of Rehabilitation acting through the Attorney General, or the Attorney General may bring an action to enjoin a violation of this part.

(Added by Stats.1976, c. 869, p. 1979, §3)

§19959 Alteration of existing public accommodations

Every existing public accommodation constructed prior to July 1, 1970, which is not exempted by Section 19956, shall be subject to the requirements of this chapter when any alterations, structural repairs or additions are made to such public accommodation. This requirement shall only apply to the area of specific alteration, structural repair or addition and shall not be construed to mean that the entire building or facility is subject to this chapter.

(Added by Stats.1971, c. 1458, p.2875, §2. Amended by Stats.1974, c. 545, p.1290, §72.)

19959.5 Mandatory service on State Solicitor General of each party's brief or petition and brief in causes of action based on violation of civil rights statutes

If a violation of Section 19955, 19955.3, 19955.5, 19956, 19956.5, 19957, 19957.5, or 19959 is alleged or the application or construction of any of these sections is in issue in any proceeding in the Supreme Court of California, a state court of appeal, or the appellate division of a superior court, each party shall serve a copy of the party's brief or petition and brief, on the State Solicitor General at the Office of the Attorney General. No brief may be accepted for filing unless the proof of service shows service on the State Solicitor General. Any party failing to comply with this requirement shall be given a reasonable opportunity to cure the failure before the court imposes any sanction and, in that instance, the court shall allow the Attorney General reasonable additional time to file a brief in the matter.

(Added by Stats. 2002, c. 244 (A.B.2524), § 5.)

C. DOUBLE DOORS

Health and Safety Code

§13011 Double doors

§13011 Double doors
Both doors of any double doors designated as the public entrance to any place of business shall be kept unlocked during normal business hours.

(Added by Stats.1983, c. 267 §1.)

3. PARKING PRIVILEGES

A. SPECIAL PLATES

Vehicle Code

§5007 Disabled person or disabled veterans; special identification license plates; return to department on death or expiration

§5007 Disabled person or disabled veterans; special identification license plates; return to department on death or expiration

(a) The department shall, upon application and without additional fees, issue a special identification license plate or plates to a disabled person or disabled veteran, pursuant to procedures adopted by the department.

(b) The special identification plates issued to a disabled person or disabled veteran shall run in a regular numerical series, which shall include one or more unique two-letter codes reserved for disabled person license plates or disabled veteran license plates. The International Symbol of Access adopted pursuant to Section 3 of Public Law 100-641 commonly known, as the "wheelchair symbol" shall be depicted on each plate.

(c) **(1)** Prior to issuing any disabled person or disabled veteran a special identification license plate, the department shall require the submission of a certificate, in accordance with paragraph signed by the physician or surgeon substantiating the disability, unless the applicant's disability is readily observable and uncontested. The disability of any person who has lost, or has lost use of, one or more lower extremities or both hands, or who has significant limitation in the use of lower extremities, may also be certified by a licensed chiropractor. The blindness of any applicant shall be certified by a licensed physician or surgeon who specializes in diseases of the eye or a licensed optometrist.

(2) The physician or other person who signs a certificate submitted under this subdivision shall retain information sufficient to substantiate that certificate and, upon request of the department, shall make that information available for inspection by the Medical Board of California.

(d) The special identification license plate shall, upon the death of the disabled person or disabled veteran, be returned to the department within 60 days or upon the expiration of the vehicle registration, whichever occurs first.

(Added by Stats.1991, c. 893 (A.B. 274), §2. Amended by Stats.1992, c. 785 (A.B. 2289), §2. Amended by Stats.2000, c. 524 (A.B. 1792), §4.)

B. OFFENSES RELATING TO TRAFFIC DEVICES

Vehicle Code

§21458 Curb markings

§21458 Curb markings

(a) Whenever local authorities enact local parking regulations and indicate them by the use of paint upon curbs, the following colors only shall be used, and the colors indicate as follows:

(1) Red indicates no stopping, standing, or parking, whether the vehicle is attended or unattended, except that a bus may stop in a red zone marked or signposted as a bus loading zone.

(2) Yellow indicates stopping only for the purpose of loading or unloading passengers or freight for the time as may be specified by local ordinance.

(3) White indicates stopping for either of the following purposes:

(A) Loading or unloading of passengers for the time as may be specified by local ordinance.

(B) Depositing mail in an adjacent mailbox.

(4) Green indicates time limit parking specified by local ordinance.

(5) Blue indicates parking limited exclusively to the vehicles of disabled persons and disabled veterans.

(b) Regulations adopted pursuant to subdivision (a) shall be effective on days and during hours or times as prescribed by local ordinances.

(Added by Stats.1959, c. 3 §21458. Amended by Stats.1975, c. 688, p.1636 §1; Stats.1985, c. 1041 §4; Stats.1992, c. 1243 (AB3090) §88 effective September 30, 1992.)

C. STOPPING, STANDING, AND PARKING

Vehicle Code

§22500	Prohibited stopping, standing, or parking
§22507	Local regulation
§22507.8	Disabled persons' and veterans' parking spaces; unauthorized parking or obstructing; off street parking facilities
§22507.9	Special enforcement units, handicapped parking enforcement; compensation and benefits; application of section
§22511	Repealed by Stats.1985, c. 1041 §6
§22511.5	Disabled persons or disabled veterans; parking privileges
§22511.55	Distinguishing placard; application; use, display, and appearance; procedures for issuance and renewal; fee; eligibility; certificate substantiating disability; temporary disability; return upon death of disabled person
§22511.56	Presentation of identification and evidence of issuance; failure to present; rebut table presumption of misuse; penalty; confiscation of placard
§22511.7	Designation of parking for disabled persons and veterans
§22511.8	Off street parking; designation of parking for disabled persons and veterans; removal of unauthorized vehicles
§22511.85	Public offstreet parking facilities; loading and unloading disabled persons; sufficient space
§22511.9	Replacement signs relating to parking privileges for disabled persons; contents
§22511.10	Disabled persons; Legislative findings
§22511.11	Office of State Architect; regulations; location of disabled person parking stalls or spaces
§22522	Parking near sidewalk access ramps

§22500 Prohibited stopping, standing, or parking
No person shall stop, park, or leave standing any vehicle whether attended or unattended, except when necessary to avoid conflict with other traffic or in compliance with the directions of a peace officer or official traffic control device, in any of the following places:

(a) Within an intersection except adjacent to curbs as may be permitted by local ordinance.

(b) On a crosswalk, except that a bus engaged as a common carrier or a taxicab may stop in an unmarked crosswalk to load or unload passengers when authorized by the legislative body of any city pursuant to an ordinance.

(c) Between a safety zone and the adjacent right-hand curb or within the area between the zone and the curb as may be indicated by a sign or red paint on the curb, which sign or paint was erected or placed by local authorities pursuant to an ordinance.

(d) Within 15 feet of the driveway entrance to any fire station. This subdivision does not apply to any vehicle owned or operated by a fire department and clearly marked as a fire department vehicle.

(e) In front of a public or private driveway, except that a bus engaged as a common carrier, school bus, or a taxicab may stop to load or unload passengers when authorized by local authorities pursuant to an ordinance.

In unincorporated territory, where the entrance of a private road or driveway is not delineated by an opening in a curb or by other curb construction, so much of the surface of the ground as is paved, surfaced, or otherwise plainly marked by vehicle use as a private road or driveway entrance, shall constitute a driveway.

(f) On any portion of a sidewalk, or with the body of the vehicle extending over any portion of a sidewalk, except electric carts when authorized by local ordinance, as specified in Section 21114.5. Lights, mirrors, or devices that are required to be mounted upon a vehicle under this code may extend from the body of the vehicle over the sidewalk to a distance of not more than 10 inches.

(g) Alongside or opposite any street or highway excavation or obstruction when stopping, standing, or parking would obstruct traffic.

(h) On the roadway side of any vehicle stopped, parked, or standing at the curb or edge of a highway, except for a school bus when stopped to load or unload pupils in a business or residence district where the speed limit is 25 miles per hour or less.

(i) Except as provided under Section 22500.5, alongside curb space authorized for the loading and unloading of passengers of a bus engaged as a common carrier in local transportation when indicated by a sign or red paint on the curb erected or painted by local authorities pursuant to an ordinance.

(j) In a tube or tunnel, except vehicles of the authorities in charge, being used in the repair, maintenance, or inspection of the facility.

(k) Upon a bridge, except vehicles of the authorities in charge, being used in the repair, maintenance, or inspection of the facility, and except that buses engaged as a common carrier in local transportation may stop to load or unload passengers upon a bridge where sidewalks are provided, when authorized by local authorities pursuant to an ordinance, and except that local authorities pursuant to ordinance or the Department of Transportation pursuant to an order, within their respective jurisdictions, may permit parking on bridges having sidewalks and shoulders of sufficient width to permit parking without interfering with the normal movement of traffic on the roadway. Local authorities by ordinance or resolution, may permit parking on these bridges on state highways in their respective jurisdictions if the ordinance or resolution is first approved in writing by the Department of Transportation. Parking shall not be permitted unless there are signs in place, as may be necessary, to indicate the provisions of local ordinances or the order of the Department of Transportation.

(l) In **f**ont of that portion of a curb that has been cut down, lowered, or constructed to provide wheelchair accessibility to the sidewalk and that is designated for wheelchair access by either a sign or red paint on the curb pursuant to an ordinance of the local authority.

(Stats.1959, c. 3, p. 1698, §22500. Amended by Stats.1963, c. 1661, p. 3252, §1; Stats.1965, c. 85, p. 1026, §1; Stats.1965, c. 295, p. 1293, §1; Stats.1965, c. 1092, p. 2736, §1; Stats.1972, c. 490, p. 862, §3; Stats.1974, c. 545, p. 1324, §203; Stats.1982, c. 822, p. 3125, §1; Stats.1984, c. 852, §1; Stats.1992, c. 624 (A.B. 3144), §6, eff. Sept. 14, 1992; Stats 198, c.877 (A.B. 2132), §66.)

§22507 Local regulation

(a) Local authorities may, by ordinance or resolution, prohibit or restrict the stopping, parking, or standing of vehicles, including, but not limited to, vehicles that are six feet or more in height (including any load thereon) within 100 feet of any intersection, on certain streets or highways, or portions thereof, during all or certain hours of the day. The ordinance or resolution may include a designation of certain streets upon which preferential parking privileges are given to residents and merchants adjacent to the streets for their use and the use of their guests, under which the residents and merchants may be issued a permit or permits that exempt them from the prohibition or restriction of the ordinance or resolution. With the exception of alleys, the ordinance or resolution shall not apply until signs or markings giving adequate notice thereof have been placed. A local ordinance or resolution adopted pursuant to this section may contain provisions that are reasonable and necessary to ensure the effectiveness of a preferential parking program.

(b) An ordinance or resolution adopted under this section may also authorize preferential parking permits for members of organizations, professions, or other designated groups, including, but not limited to, school personnel, to park on specified streets if the local authority determines that the use of the permits will not adversely affect parking conditions for residents and merchants in the area.

(Stats.1959, c. 3 §22507. Amended by Stats.1963, c. 1070 §1; Stats.1969, c. 541 §1; Stats.1976, c. 1002 §1; Stats.1980, c. 140 §1; Stats.1984, c. 181 §2; Stats.1985., c. 912 §2; Stats.1987, c. 455 §4; Stats 1997, c. 343 (S.B. 626), §2; Amended by Stats. 2001, c. 223(S.B. 779), §1.)

§22507.8 Disabled persons' and veterans' parking spaces; unauthorized parking or obstructing; off street parking facilities

(a) It is unlawful for any person to park or leave standing any vehicle in a stall or space designated for disabled persons and disabled veterans pursuant to Section 22511.7 or 22511.8, unless the vehicle displays either a

special identification license plate issued pursuant to Section 5007 or a distinguishing placard issued pursuant to Section 22511.55 or 22511.59.

(b) It is unlawful for any person to obstruct, block or otherwise bar access to those parking stalls or spaces except as provided in subdivision (a).

(c) It is unlawful for any person to park or leave standing any vehicle including a vehicle displaying a special identification license plate issued pursuant to Section 5007 or a distinguishing placard issued pursuant to Section 22511.55 or 22511.59, in either of the following places.

(1) On the lines marking the boundaries of a parking stall or space designated for disabled persons or disabled veterans.

(2) In any area of the pavement adjacent to a parking stall or space designated for disabled persons or disabled veterans that is marked by crosshatched lines and is thereby designated, pursuant to any local ordinance, for the loading and unloading of vehicles parked in the stall or space.

(d) Subdivisions (a), (b), and (c) apply to all offstreet parking facilities owned or operated by the state, and to all off street parking facilities owned or operated by a local authority.
Subdivisions (a), (b), and (c) also apply to any privately owned and maintained off street parking facility.

(Added by Stats.1989, c. 338, §2, eff. Sept. 11, 1989, operative Jan. 1, 1991. Amended by Stats.1990, c. 303 (A.B.3849), §1; Stats.1994, c. 1149 (A.B.2878), §4; Stats 1997, c.945 (A.B.1561), §18.)

§22507.9 Special enforcement units; handicapped parking enforcement; compensation and benefits; application of section
Local authorities may establish a special enforcement unit for the sole purpose of providing adequate enforcement of Section 22507.8 and local ordinances and resolutions adopted pursuant to Section 22511.7.

Local authorities may establish recruitment and employment guidelines that encourage and enable employment of qualified disabled persons in these special enforcement units.

Members of the special enforcement unit may issue notices of parking violation for violations of Section 22507.8 and local ordinances adopted pursuant to Section 22511.7. Members of the special enforcement unit shall not be peace officers and shall not make arrests in the course of their official duties, but shall wear distinctive uniforms and badges while on duty. A two-way radio unit, which may utilize police frequencies or citizens' band, may be issued by the local authority to each member of the special enforcement unit for use while on duty.

The local authority may pay the cost of uniforms and badges for the special enforcement unit, and may provide daily cleaning of the uniforms. Additionally, the local authority may provide motorized wheelchairs for use by members of the special unit while on duty, including batteries and necessary recharging thereof. Any motorized wheelchair used by a member of the special enforcement unit while on duty shall be equipped with a single headlamp in the front and a single stop lamp in the rear.

Members of the special enforcement unit may be paid an hourly wage without the compensatory benefits provided other permanent and temporary employees, but shall be entitled to applicable workers' compensation benefits as provided by law. Insurance provided by the local authority for disability or liability of a member of the special enforcement unit shall be the same as for other employees performing similar duties.

Nothing in this section precludes a local authority from using regular full-time employees to enforce this chapter and ordinances adopted pursuant thereto.

This section applies to all counties and cities, including every charter city and city and county.

(Added by Stats.1984, c. 1095, §1; Amended by Stats 1996, c.124 (A.B. 3470), §127.)

§22511 Repealed by Stats 1985 ch 1041 §6

§22511.5 Disabled persons or disabled veterans; parking privileges

(a) (1) Any disabled person or disabled veteran displaying special identification license plates issued under Section 5007 or a distinguishing placard issued under Section 22511.55 or 22511.59 shall be allowed to park for unlimited periods in any of the following zones:

(A) In any restricted zone described in paragraph (5) of subdivision (a) of Section 21458 or on streets upon which preferential parking privileges and height limits have been given pursuant to Section 22507.

(B) In any parking zone that is restricted as to the length of time parking is permitted as indicated by a sign erected pursuant to a local ordinance.

(2) Any disabled person or disabled veteran shall be allowed to park in any metered parking space without being required to pay any parking meter fees.

(3) This subdivision does not apply to any zone for which state law or ordinance absolutely prohibits stopping, parking, or standing of all vehicles, or which the law or ordinance reserves for special types of vehicles, or to the parking of any vehicle that is involved in the operation of a street vending business.

(b) Any disabled person or disabled veteran shall be allowed to park a vehicle displaying a special identification disabled person license plate or placard issued by a foreign jurisdiction with the same parking privileges authorized in this code for any vehicle displaying a special identification license plate or a distinguishing placard issued by the Department of Motor Vehicles.

(Added by Stats.1978, c. 457 §2. Amended by Stats.1980, c. 261 §1; Stats.1982, c. 974 §2; Stats.1982, c. 975 §6.5; Stats.1984, c. 510 §1; Stats.1984, c. 1118 §1; Stats.1985, c. 1041 §7; Stats.1986, c. 351 §3; Stats.1988, c. 115 §1; Stats.1989, c. 554 §3; Stats.1991, c. 893 (A.B. 274) §4; Stats.1992, c. 785 (A.B. 2289) §3; Stats.1992, c. 1241 (S.B.1615) §21; Stats.1994, c. 1149 (A.B.2878), §5.)

§22511.55 Distinguishing placard; application; use, display, and appearance; procedures for issuance and renewal; fee; eligibility; certificate substantiating disability; temporary disability; return upon death of disabled person

(a) (1) Any disabled person or disabled veteran may apply to the department for the issuance of a distinguishing placard. The placard may be used in lieu of the special identification license plate or plates issued under Section 5007 for parking purposes described in Section 22511.5 when suspended from the rear view mirror or, if there is no rear view mirror, when displayed on the dashboard of a vehicle. It is the intent of the Legislature to encourage the use of these distinguishing placards because they provide law enforcement officers with a more readily recognizable symbol for distinguishing vehicles qualified for the parking privilege. The placard shall be the size, shape, and color determined by the department and shall bear the International Symbol of Access adopted pursuant to Section 3 of Public Law 100-641, commonly known as the "wheelchair symbol." The department shall incorporate instructions for the lawful use of a placard, and a summary of the penalties for the unlawful use of a placard, into the identification card issued to the placard owner.

(2) (A) The department may establish procedures for the issuance and renewal of the placards. The placards shall have a fixed expiration date of June 30 every two years. A portion of the placard shall be printed in a contrasting color that shall be changed every two years. The size and color of this contrasting portion of the placard shall be large and distinctive enough to be readily identifiable by a law enforcement officer in a passing vehicle.

(B) As used in this section, "year" means the period between the inclusive dates of July 1 through June 30.

(C) Prior to the end of each year, the department shall, for the most current three years available, compare its record of disability placards issued against the records of the Bureau of Vital Statistics of the State Department of Health Services, or its successor, and withhold any renewal notices that otherwise would have been sent, for any placard holders identified as deceased.

(3) Except as provided in paragraph (4), no person is eligible for more than one placard at any time.

(4) Organizations and agencies involved in the transportation of disabled persons or disabled veterans may apply for a placard for each vehicle used for the purpose of transporting disabled persons or disabled veterans.

(b) **(1)** Prior to issuing any disabled person or disabled veteran an original distinguishing placard, the department shall require the submission of a certificate, in accordance with a paragraph (2), signed by the physician or surgeon substantiating the disability, unless the applicant's disability is readily observable and uncontested. The disability of any person who has lost, or has lost use of, one or more lower extremities or both hands, or who has significant limitation in the use of lower extremities, may also be certified by a licensed chiropractor. The blindness of any applicant shall be certified by a licensed physician or surgeon who specializes in diseases of the eye or licensed optometrist. The physician or person certifying the qualifying disability shall provide a full description of the illness or disability on the form submitted to the department.

(2) The physician or other person who signs a certificate submitted under this subdivision shall retain information sufficient to substantiate that certificate and, upon request of the department, shall make that information available for inspection by the Medical Board of California.

(3) The department shall maintain in its records all information on an applicant's certification of permanent disability and shall make that information available to eligible law enforcement or parking control agencies upon a request pursuant to Section 22511.58.

(c) Any person who has been issued a distinguishing placard pursuant to subdivision (a) may apply to the department for a substitute placard without recertification of eligibility, if that placard has been lost or stolen.

(d) The distinguishing placard shall be returned to the department not later than 60 days after the death of the disabled person or disabled veteran to whom to whom the placard was issued.

(Added by Stats.1991, c. 893 (A.B. 274) §5. Amended by Stats.1991, c. 894 (S.B. 234), §3; Stats.1993, c. 1292 (S.B. 274) §13; Stats.1994, c. 1149 (A.B.2878), §6. Amended by Stats.2000, c. 524 (A.B. 1792), §5; Amended by Stats. 2000, c. 524(A.B. 1792), §5; Stats. 2001, c. 708 (A.B. 677), §3.)

§22511.56 Presentation of identification and evidence of issuance; failure to present; rebuttable presumption of misuse; penalty; confiscation of placard

(a) Any person using a distinguishing placard issued pursuant to Section 22511.55 or 22511.59 for parking as permitted by Section 22511.5 shall, upon request of any peace officer or person authorized to enforce parking laws, ordinances, or regulations, present identification and evidence of the issuance of that placard to that person.

(b) Failure to present the requested identification and evidence of the issuance of that placard shall be a rebuttable presumption that the placard is being misused and that the associated vehicle has been parked in violation of the provisions of Section 22507.8.

(c) In addition to any other applicable penalty for the misuse of a placard, the officer or parking enforcement person may confiscate a placard being used for parking purposes that benefit any person other than the person to whom the placard was issued by the Department of Motor Vehicles. A placard lawfully used by a person transporting a disabled person pursuant to subdivision (b) of Section 4461 shall not be confiscated.

(Added by Stats.1991, c. 894 (S.B.234), §4. Amended by Stats.1994, c. 1149, c. 1149 (A.B.2878), §7.)

§22511.57 Disabled person placards lost or stolen; owner of placard deceased; vehicle parking restrictions and prohibitions

Local authorities may, by ordinance or resolution, prohibit or restrict the parking or standing of a vehicle on streets or highways or from a disabled person's parking stall or space of a privately or publicly owned or operated off street parking facility within their jurisdiction when the vehicle displays, in order to obtain special parking privileges, a disabled placard issued pursuant to Section 22511.55, and the Department of Motor Vehicles record

for the identification number assigned to the placard indicates that the card has been reported as lost or stolen, or was issued to a person who has been reported as being deceased for a period exceeding 60 days.

(Added by Stats.1994, c. 221 (S.B.1378), §1, operative July 1, 1995.)

§22511.58 Physician's certificate information; release to specified local agencies; local review board

(a) Upon a request to the department by a local public law enforcement agency or local agency responsible for the administration or enforcement of parking regulations, the department shall make available to the requesting agency any information contained in a physician's certificate submitted to the department as part of the application for a disabled person's parking privileges, substantiating the disability of a person applying for or who has been issued a parking placard pursuant to Section 22511.55. The department shall not provide the information specified in this subdivision to any private or other third-party parking citation processing agency.

(b) Local authorities may establish a review board or panel, which shall include a qualified physician or medical authority, for purposes of reviewing information contained in the applications for special parking privileges and the certification of qualifying disabilities for persons residing within the jurisdiction of the local authority. Any findings or determinations by a review board or panel under this section indicating that an application or certification is fraudulent or lacks proper certification may be transmitted to the department or other appropriate authorities for further review and investigation.

(Added by Stats.1996, c. 1033 (S.B.1498), §2.)

§22511.59 Temporary distinguishing placard

(a) Upon receipt of the applications and documents required by subdivisions (b), (c), or (d), the department shall issue a temporary distinguishing placard bearing the International Symbol of Access adopted pursuant to Section 3 of Public Law 100-641 commonly known as the "wheelchair symbol." During the period for which it is valid, the temporary distinguishing placard may be used for the parking purposes described in Section 22511.5 in the same manner as a distinguishing placard issued pursuant to Section 22511.55.

(b) **(1)** Any person who is temporarily disabled for a period of not more than six months may apply to the department for the issuance of the temporary distinguishing placard described in subdivision (a).

(2) Prior to issuing a placard pursuant to this subdivision, the department shall require the submission of a certificate signed by a physician or surgeon, as described in subdivision (b) of Section 22511.55, substantiating the temporary disability and stating the date upon which the disability is expected to terminate.

(3) The physician or other person who signs a certificate submitted under this subdivision shall maintain information sufficient to substantiate that certificate and, upon request of the department, shall make that information available for inspection by the Medical Board of California.

(4) A placard issued pursuant to this subdivision shall expire not later than 180 days from the date of issuance or upon the expected termination date of the disability, as stated on the certificate required by paragraph (2) whichever is less.

(5) The fee for a temporary placard issued pursuant to this subdivision shall be six dollars ($6).

(c) **(1)** Any disabled person or disabled veteran who is not a resident of this state and plans to travel within the state may apply to the department for the issuance of the temporary distinguishing placard described in subdivision (a).

(2) Prior to issuing a placard pursuant to this subdivision, the department shall require certification of the disability, as described in subdivision (b) of Section 22511.55.

(3) The physician or other person who signs a certificate submitted under this subdivision shall maintain information sufficient to substantiate that certificate and, upon request of the department, shall make that information available for inspection by the Medical Board of California.

(4) A placard issued pursuant to this subdivision shall expire not later than 90 days from the date of issuance.

(d) **(1)** Any disabled person or disabled veteran who has been issued either a distinguishing placard pursuant to Section 22511.55 or special identification license plates pursuant to Section 5007, but not both, may apply to the department for the issuance of the temporary distinguishing placard for the purpose of travel described in subdivision (a).

(2) Prior to issuing a placard pursuant to this subdivision, the department shall require the applicant to submit either the number identifying the distinguishing placard issued pursuant to Section 22511.55 or the number on the special identification license plates.

(3) A placard issued pursuant to this subdivision shall expire not later than 30 days from the date of issuance.

(Added by Stats.1994, c. 1149 (A.B. 2878), §8. Amended by Stats.2000, c. 524 (A.B.1792), §6; Stats. 2001, c. 708 (A.B. 677), §4.)

§22511.6 Cancellation or revocation of distinguishing placards

(a) The Department of Motor Vehicles may cancel or revoke a distinguishing placard issued pursuant to Section 22511.55 or 22511.59 in any of the following events:

(1) When the department is satisfied that the placard was fraudulently obtained or erroneously issued.

(2) When the department determines that the required fee has not been paid and the fee is not paid upon reasonable notice and demand.

(3) When the placard could have been refused when last issued or renewed.

(4) When the department determines that the owner of the placard has committed any offense described in Section 4461 or 4463, involving the placard to be canceled or revoked.

(5) When the department determines that the owner of the placard is deceased.

(b) Whenever the Department of Motor Vehicles cancels or revokes a distinguishing placard, the owner or person in possession of the placard shall immediately return the placard to the department.

(Amended by Stats.1993, c.1292 (S.B.274), §14; Stats.1994, c.1149 (A.B.2878), §9.)

§22511.7 Designation of parking for disabled persons and veterans

In addition to Section 22511.8 for off street parking, a local authority may, by ordinance or resolution, designate parking spaces for the exclusive use of any vehicle, which displays either a special identification license plate issued pursuant to Section 5007 or a distinguishing placard issued pursuant to Section 22511.55 or 22511.59. Whenever a local authority so designates a parking space, it shall be indicated by blue paint on the curb or edge of the paved portion of the street adjacent to the space. In addition to blue paint, the space may also be indicated by signs or other suitable means. In areas where snow or ice may obscure the blue paint, a clearly visible sign appropriately designating the space is sufficient for purposes of this section.

This section does not restrict the privilege granted to disabled persons and disabled veterans by Section 22511.5.

(Added by Stats.1975, c. 688 §2. Amended by Stats.1976, c. 1096 §4; Stats.1983, c. 270 §2, effective July 15, 1983; Stats.1985, c. 1041, §8; Stats.1987, c. 314, §2; Stats.1989, c. 554, §4; Stats.1990, c. 692(A.B.3398), §4; Stats.1994, c. 1149 (A.B.2878), §10.)

§22511.8 Off street parking; designation of parking for disabled persons and veterans; removal of unauthorized vehicles

(a) Any local authority, by ordinance or resolution, and any person in lawful possession of an off street parking facility may designate stalls or spaces in an off street parking facility owned or operated by the local authority or

person for the exclusive use of any vehicle which displays either a special identification license plate issued pursuant to Section 5007 or a distinguishing placard issued pursuant to Section 22511.55 or 22511.59. The designation shall be made by posting a sign as described in paragraph (1), and by either of the markings described in paragraph (2) or (3):

(1) By posting immediately adjacent to, and visible from, each stall or space, a sign consisting of a profile view of a wheelchair with occupant in white on a blue background.

(2) By outlining or painting the stall or space in blue and outlining on the ground in the stall or space in white or suitable contrasting color a profile view depicting a wheelchair with occupant.

(3) By outlining a profile view of a wheelchair with occupant in white on a blue background, of the same dimensions as in paragraph (2). The profile view shall be located so that it is visible to a traffic enforcement officer when a vehicle is properly parked in the space.

(b) If posted in accordance with subdivision (d) or (e), the owner or person in lawful possession of a privately owned or operated off street parking facility, after notifying the police or sheriff's department, may cause the removal of a vehicle from a stall or space designated pursuant to subdivision (a) in the facility to the nearest public garage unless a special identification license plate issued pursuant to Section 5007 or distinguishing placard issued pursuant to Section 22511.55 or 22511.59 is displayed on the vehicle.

(c) If posted in accordance with subdivision (d), the local authority owning or operating an off street parking facility, after notifying the police or sheriff's department, may cause the removal of a vehicle from a stall or space designated pursuant to subdivision (a) in the facility to the nearest public garage unless a special identification license plate issued pursuant to Section 5007 or a distinguishing placard issued pursuant to Section 22511.55 or 22511.59 is displayed on the vehicle.

(d) Except as provided in Section 22511.9, the posting required for an off street parking facility owned or operated either privately or by a local authority shall consist of a sign not less than 17 by 22 inches in size with lettering not less than one inch in height which clearly and conspicuously states the following: "Unauthorized vehicles not displaying distinguishing placards or license plates issued for physically handicapped persons will be towed away at owner's expense. Towed vehicles may be reclaimed at

_____ or by telephoning
(Address)
_____."
(Telephone number of local law enforcement agency)

The sign shall be posted in either of the following locations:

(1) Immediately adjacent to, and visible from, the stall or space.

(2) In a conspicuous place at each entrance to the off street parking facility.

(e) If the parking facility is privately owned and public parking is prohibited by the posting of a sign meeting the requirements of paragraph (1) of subdivision (a) of Section 22658, the requirements of subdivision (b) may be met by the posting of a sign immediately adjacent to, and visible from, each stall or space indicating that a vehicle not meeting the requirements of subdivision (a) will be removed at the owner's expense and containing the telephone number of the local traffic law enforcement agency.

(f) This section does not restrict the privilege granted to disabled persons and disabled veterans by Section 22511.5.

(Added by Stats.1975, c. 688 §3. Amended by Stats.1976, c. 1096 §5; Stats.1982, c. 975 §7; Stats.1983, c. 270 §3, effective July 15, 1983; Stats.1985, c. 312, §1; Stats.1985, c. 1041 §9; Stats.1987, c. 314, §3; Stats.1989, c. 554, §5; Stats.1990, c. 216 (S.B.2510), §118; Stats.1991, c. 928 (A.B.1886), §27, eff. Oct. 14, 1991; Stats.1994, c. 1149 (A.B.2878), §11.)

§22511.85 Public off street parking facilities; loading and unloading disabled persons; sufficient space
Any vehicle equipped with a side-loading lift or ramp that is used for the loading and unloading of disabled persons may park in not more than two adjacent stalls or spaces in any public off-street parking facility when loading or unloading disabled persons, if there is no single parking space immediately available within that facility that is suitable for that purpose including, but not limited to, when there is not sufficient space to operate a vehicle lift or ramp or there is not sufficient room for a disabled person to exit the vehicle or maneuver once outside the vehicle.

(Added by Stats.2000, c. 215 (A.B.1276), § 3.)

§22511.9 Replacement signs relating to parking privileges for disabled persons; contents
Every new or replacement sign installed on or after January 1, 1992, relating to parking privileges for disabled persons shall refer to "disabled persons" rather than "physically handicapped persons" or any other similar term, whenever such a reference is required on a sign.

(Added by Stats.1991, c. 928 (A.B.1886), §28, eff. Oct. 14, 1991.)

§22511.10 Disabled persons; Legislative findings
The Legislature hereby finds and declares all of the following:

(a) Two and one-half million Californians suffer from some form of chronic obstructive pulmonary disease. These persons who are not in wheelchairs have difficulty walking long distances.

(b) Encouraging those with physical disabilities to engage in activities outside of the home promotes better health and self-esteem, thereby lowering health costs.

(c) Placing disabled person parking spaces closest to the main entrances of buildings does not cost taxpayers, but provides accessibility to the physically disabled.

(d) It is the intent of the Legislature, in enacting Section 22511.11, to direct the Office of the State Architect to propose regulations that require disabled person parking spaces to be located on the shortest accessible route of travel to an accessible entrance or exit of a building or parking facility.

(Added by Stats.1992, c. 1187 (S.B.2043), §1.)

§22511.11 Office of State Architect; regulations; location of disabled person parking stalls or spaces
(a) The Office of the State Architect shall propose regulations specifying the location of disabled person parking stalls or spaces designated pursuant to Section 22511.8, for parking facilities constructed or reconstructed pursuant to a building permit issued on or after October 1, 1993. In specifying the placement of these stalls or spaces near buildings or facilities and within parking structures, consideration shall be given to the special access needs of disabled persons.

(b) The Office of the State Architect shall submit the regulations proposed pursuant to subdivision (a) to the State Building Standards Commission on or before July 1, 1993, for approval, adoption, and publication in Title 24 of the California Code of Regulations.

(Added by Stats.1992, c. 1187 (S.B.2043), §2.)

§22522 Parking near sidewalk access ramps
Text of section operative July 1, 1995

No person shall park a vehicle within three feet of any sidewalk access ramp constructed at, or adjacent to, a crosswalk or at any other location on a sidewalk so as to be accessible to and usable by the physically disabled, if the area adjoining the ramp is designated by either a sign or red paint.

(Added by Stats.1974, c. 760, p. 1675, § 1. Amended by Stats.1994, c. 221 (S.B.1378), §2, operative July 1, 1995; Stats. 1999, c. 1007 (S.B. 532), §22.)

4. CIVIL RIGHTS AND NON-DISCRIMINATION

A. BLIND AND OTHER PHYSICALLY DISABLED PERSONS

Civil Code

§51	Unruh Civil Rights Act; equal rights; business establishments; violation
§51.5	Discrimination, boycott, blacklist, etc.; business establishments; equal rights
§51.7	Freedom from violence or intimidation
§51.8	Discrimination; franchises
§52	Denial of civil rights or discrimination; damages; civil action by people or person aggrieved; intervention; unlawful practice complaint
§52.1	Civil actions for protection of rights; damages, injunctive and other equitable relief; violations of orders
§53	Restrictions upon transfer or use of realty because of sex, race, color, religion, ancestry, national origin, or disability
§54	Right to streets, highways, and other public places; disability
§54.1	Access to public conveyances, places of public accommodation, amusement or resort, and housing accommodations
§54.2	Guide, signal or service dogs; right to accompany individuals with a disability and trainers; damages
§54.3	Violations; liability
§54.4	Blind pedestrians; failure to carry white cane
§54.5	White cane safety day; proclamation
§54.6	Visually Impaired
§54.7	Zoos or wild animal parks; facilities for guide, service or signal dogs accompanying handicapped persons
§54.8	Hearing impaired persons; assistive listening systems in civil or criminal proceedings; notice of need; availability; use in proceedings
§55	Violations; injunction; action by person actually or potentially aggrieved
§55.1	Violations; injunctions; district or city attorney, attorney general
§1360	Modification of unit by owner; facilitation of access for handicapped; approval by project association
§1361	Common Areas

§51 Unruh Civil Rights Act; equal rights; business establishments; violation

(a) This section shall be known, and may be cited, as the Unruh Civil Rights Act.

(b) All persons within the jurisdiction of this state are free and equal, and no matter what their sex, race, color, religion, ancestry, national origin, disability, or medical condition are
entitled to the full and equal accommodations, advantages, facilities, privileges, or services in all business establishments of every kind whatsoever.

(c) This section shall not be construed to confer any right or privilege on a person that is conditioned or limited by law or that is applicable alike to persons of every sex, color, race, religion, ancestry, national origin, disability, or medical condition.

(d) Nothing in this section shall be construed to require any construction, alteration, repair, structural or otherwise, or modification of any sort whatsoever, beyond that construction, alteration, repair, or modification that is otherwise required by other provision so f law, to any new or existing establishment, facility, building, improvement, or any other structure, nor shall anything in this section be construed to augment, restrict, or alter in any way the authority of the State Architect to require construction, alteration, repair, or modifications that the State Architect otherwise possesses pursuant to other laws.

(e) For purposes of this section:

(1) "Disability" means any mental or physical disability as defined in Section 12926 of the Government Code.

(2) "Medical condition" has the same meaning as defined in subdivision (h) of Section 12926 of the Government Code.

(f) A violation of the right of any individual under the Americans with Disabilities Act of 1990 (Public Law 101-336) shall also constitute a violation of this section.

(Added by Stats.1905, c. 413 §1. Amended by Stats.1919, c. 210 §1; Stats.1923, c. 235 §1; Stats.1959, c. 1866 §1; Stats.1961, c. 1187 §1; Stats.1974, c. 1193 §1; Stats.1987, c. 159 §1; Stats.1992, c. 913 (A.B. 1077) §3; Stats 1998, c. 195 (A.B. 2702), §1; Stats.2000, c. 1049 (A.B.2222), § 2.)

§51.5 Discrimination, boycott, blacklist, etc.; business establishments; equal rights

(a) No business establishment of any kind whatsoever shall discriminate against, boycott or blacklist, or refuse to buy from, contract with, sell to, or trade with any person in this state because of the race, creed, religion, color, national origin, sex, disability or medical condition of the person or of the person's partners, members, stockholders, directors, officers, managers, superintendents, agents, employees, business associates, suppliers, or customers, because the person is perceived to have one or more of those characteristics, or because the person is associated with a person who has, or is perceived to have, any of those characteristics.

(b) As used in this section "person" includes any person, firm, association, organization, partnership, business trust, corporation, limited liability company, or company.

(c) This section shall not be construed to require any construction, alteration, repair, structural or otherwise, or modification of any sort whatsoever, beyond that construction, alteration, repair, or modification that is otherwise required by other provisions of law, to any new or existing establishment, facility, building, improvement, or any other structure, nor shall this section be construed to augment, restrict, or alter in any way the authority of the State Architect to require construction, alteration, repair, or modifications that the State Architect otherwise possesses pursuant to other laws.

(d) For purposes of this section:

(1) "Disability" means any mental or physical disability as defined in Section 12926 of the Government Code.

(2) Medical condition" has the same meaning as defined in subdivision (h) of Section 12926 of the Government Code.

(Added by Stats.1976, c. 366 §1. Amended by Stats.1987, c. 159 §2; Stats.1992, c. 913 (A.B. 1077) §3.2; Stats.1994, c. 1010 (S.B.2053), §28; Stats 1998, c. 195 (A.B. 2702), §2; Stats 1999, c. 591 (A.B. 1670), §2. Stats.2000, c.1049 (A.B.2222), §3.)

§51.7 Freedom from violence or intimidation

(a) All persons within the jurisdiction of this state have the right to be free from any violence, or intimidation by threat of violence, committed against their persons or property because of their race, color, religion, ancestry, national origin, political affiliation, sex, sexual orientation, age, disability, or position in a labor dispute, or because another person perceives them to have one or more of those characteristics. The identification in this subdivision of particular bases of discrimination is illustrative rather than restrictive.

This section does not apply to statements concerning positions in a labor dispute, which are made during otherwise lawful labor picketing.

(b) As used in this section, "sexual orientation" means heterosexuality, homosexuality, or bisexuality.

(Added by Stats.1976, c. 1293 §2. Amended by Stats.1984, c. 1437 §1; Stats.1985, c. 497 §1; Stats.1987, c. 1277 §2; Stats.1994, c. 407 (S.B.1595), §1.)

§51.8 Discrimination; franchises

No franchisor shall discriminate in the granting of franchises solely because of the race, color, religion, sex, national origin, or disability of the franchisee and the racial, ethnic, religious, national origin, or disability composition of a neighborhood or geographic area in which the franchise is located. Nothing in this section shall be interpreted to prohibit a franchisor from granting a franchise to prospective franchisees as part of a program or programs to make franchises available to persons lacking the capital, training, business experience, or other qualifications ordinarily required of franchisees, or any other affirmative action program adopted by the franchisor.

Nothing in this section shall be construed to require any construction, alteration, repair, structural or otherwise, or modification of any sort whatsoever beyond that construction, alteration, repair, or modification that is otherwise required by other provisions of law, to any new or existing establishment, facility, building, improvement, or any other structure, nor shall anything in this section be construed to augment, restrict, or alter in any way the authority of the State Architect to require construction, alteration, repair, or modifications that the State Architect otherwise possesses pursuant to other laws.

(Added by Stats.1980, c. 1303 §1. Amended by Stats.1987, c. 159 §3; Stats.1992, c. 913 (A.B. 1077) §3.4; Stats 1998, c. 195 (A.B. 2702), §3.)

§52 Denial of civil rights or discrimination; damages; civil action by people or person aggrieved; intervention; unlawful practice complaint

(a) Whoever denies, aids or incites a denial, or makes any discrimination or distinction contrary to Section 51, or 51.5, or 51.6 is liable for each and every offense for the actual damages, and any amount that may be determined by a jury, or a court sitting without a jury, up to a maximum of three times the amount of actual damage but in no case less than four thousand dollars ($4,000), and any attorney's fees that may be determined by the court in addition thereto, suffered by any person denied the rights provided in Section 51, or 51.5, or 51.6.

(b) Whoever denies the right provided by Section 51.7 or 51.9, or aids, incites, or conspires in that denial, is liable for each and every offense for the actual damages suffered by any person denied that right and, in addition, the following:

(1) An amount to be determined by a jury, or a court sitting without a jury, for exemplary damages.

(2) A civil penalty of twenty-five thousand dollars ($25,000) to be awarded to the person denied the right provided by Section 51.7 in any action brought by the person denied the right, or by the Attorney General, a district attorney, or a city attorney.

(3) Attorney fees as may be determined by the court.

(c) Whenever there is reasonable cause to believe that any person or group of persons is engaged in conduct of resistance to the full enjoyment of any of the rights described in this section, and that conduct is of that nature and is intended to deny the full exercise of those rights, the Attorney General, any district attorney or city attorney, or any person aggrieved by the conduct may bring a civil action in the appropriate court by filing with it a complaint. The complaint shall contain the following:

(1) The signature of the officer, or, in his or her absence, the individual acting on behalf of the officer, or the signature of the person aggrieved.

(2) The facts pertaining to the conduct.

(3) A request for preventive relief, including an application for a permanent or temporary injunction, restraining order, or other order against the person or persons responsible for the conduct, as the complainant deems necessary to ensure the full enjoyment of the rights described in this section.

(d) Whenever an action has been commenced in any court seeking relief from the denial of equal protection of the laws under the Fourteenth Amendment to the Constitution of the United States on account of race, color, religion, sex, national origin, or disability, the Attorney General or any district attorney or city attorney for or in the name of the people of the State of California may intervene in the action upon timely application if the Attorney

General or any district attorney or city attorney certifies that the case is of general public importance. In that action the people of the State of California shall be entitled to the same relief as if it had instituted the action.

(e) Actions brought pursuant to this section are independent of any other actions, remedies, or procedures that may be available to an aggrieved party pursuant to any other law.

(f) Any person claiming to be aggrieved by an alleged unlawful practice in violation of Section 51 or 51.7 may also file a verified complaint with the Department of Fair Employment and Housing pursuant to Section 12948 of the Government Code.

(g) This section does not require any construction, alteration, repair, structural or otherwise, or modification of any sort whatsoever, beyond that construction, alteration, repair, or modification that is otherwise required by other provisions of law, to any new or existing establishment, facility, building, improvement, or any other structure, nor does this section augment, restrict, or alter in any way the authority of the State Architect to require construction, alteration, repair, or modifications that the State Architect otherwise possesses pursuant to other laws.

(h) For the purposes of this section, "actual damages" means special and general damages. This subdivision is declaratory of existing law.

(Added by Stats.1905, c. 413 §2. Amended by Stats.1919, c. 210 §2; Stats.1923, c. 235 §2; Stats.1959, c. 1866 §2; Stats.1974, c. 1193 §2; Stats.1976, c. 366 §2; Stats.1976, c. 1293 §2.5; Stats.1978, c. 1212 §1; Stats.1981, c. 521 §1, effective September 16, 1981; Amended Stats.1986, c. 244 §1; Stats.1987, c. 159 §4; Stats.1989, c. 459 §1; Stats.1991, c. 607 (S.B. 98) §2; Stats.1991, c. 839 (A.B. 1169) §2; Stats.1992, c. 913 (A.B. 1077) §3.6; Stats.1994, c. 535 (S.B.1288), §1; Stats 1998, c.195 (A.B. 2702), §4; Stats 1999, c. 964 (A.B. 519), §2. Stats.2000, c. 98 (A.B.2719), § 2; Stats. 2001, c. 261 (A.B. 587), §1.)

§52.1 Civil actions for protection of rights; damages, injunctive and other equitable relief; violations of orders

(a) If a person or persons, whether or not acting under color of law, interferes by threats, intimidation, or coercion, or attempts to interfere by threats, intimidation, or coercion, with the exercise or enjoyment by any individual or individuals of rights secured by the Constitution or laws of the United States, or of the rights secured by the Constitution or laws of this state, the Attorney General, or any district attorney or city attorney may bring a civil action for injunctive and other appropriate equitable relief in the name of the people of the State of California, in order to protect the peaceable exercise or enjoyment of the right or rights secured. An action brought by the Attorney General, any district attorney, or any city attorney may also seek a civil penalty of twenty-five thousand dollars ($25,000). If this civil penalty is requested, it shall be assessed individually against each person who is determined to have violated this section and the penalty shall be awarded to each individual whose rights under this section are determined to have been violated.

(b) Any individual whose exercise or enjoyment of rights secured by the Constitution or laws of the United States, or of rights secured by the Constitution or laws of this state, has been interfered with, or attempted to be interfered with, as described in subdivision (a), may institute and prosecute in his or her own name and on his or her own behalf a civil action for damages, including, but not limited to, damages under Section 52, injunctive relief, and other appropriate equitable relief to protect the peaceable exercise or enjoyment of the right or rights secured.

(c) An action brought pursuant to subdivision (a) or (b) may be filed either in the superior court for the county in which the conduct complained of occurred or in the superior court for the county in which a person whose conduct complained of resides or has his or her place of business. An action brought by the Attorney General pursuant to subdivision (a) also may be filed in the superior court for any county wherein the Attorney General has an office, and in that case, the jurisdiction of the court shall extend throughout the state.

(d) If a court issues a temporary restraining order or a preliminary or permanent injunction in an action brought pursuant to subdivision (a) or (b), ordering a defendant to refrain from conduct or activities, the order issued shall include the following statement: VIOLATION OF THIS ORDER IS A CRIME PUNISHABLE UNDER SECTION 422.9 OF THE PENAL CODE.

(e) The court shall order the plaintiff or the attorney for the plaintiff to deliver, or the county clerk to mail, two copies of any order, extension, modification, or termination thereof granted pursuant to this section, by the close of the business day on which the order, extension, modification, or termination was granted, to each local law enforcement agency having jurisdiction over the residence of the plaintiff and any other locations where the court determines that acts of violence against the plaintiff are likely to occur. Those local law enforcement agencies shall be designated by the plaintiff or the attorney for the plaintiff. Each appropriate law enforcement agency receiving any order, extension, or modification of any order issued pursuant to this section shall serve forthwith one copy thereof upon the defendant. Each appropriate law enforcement agency shall provide to any law enforcement officer responding to the scene of reported violence, information as to the existence of, terms, and current status of, any other issued pursuant to this section.

(f) A court shall not have jurisdiction to issue an order or injunction under this section, if that order or injunction would be prohibited under Section 527.3 of the Code of Civil Procedure.

(g) An action brought pursuant to this section is independent of any other action, remedy, or procedure that may be available to an aggrieved individual under any other provision of law, including, but not limited to, an action, remedy, or procedure brought pursuant to Section 51.7.

(h) In addition to any damages, injunction, or other equitable relief awarded in an action brought pursuant to subdivision (b), the court may award the petitioner or plaintiff reasonable attorney's fees.

(i) A violation of an order described in subdivision (d) may be punished either by prosecution under Section 422.9 of the Penal Code, or by a proceeding for contempt brought pursuant to Title 5 (commencing with Section 1209) of Part 3 of the Code of Civil Procedure. However, in any proceeding pursuant to the Code of Civil Procedure, if it is determined that the person proceeded against is guilty of the contempt charged, in addition to any other relief, a fine may be imposed not exceeding one thousand dollars ($1,000), or the person may be ordered imprisoned in a county jail not exceeding six months, or the court may order both the imprisonment and fine.

(j) Speech alone is not sufficient to support an action brought pursuant to subdivision (a) or (b), except upon a showing that the speech itself threatens violence against a specific person or group of persons; and the person or group of persons against whom the threat is directed reasonably fears that, because of the speech, violence will be committed against them or their property and that person threatening violence had the apparent ability to carry out the threat.

(k) No order issued in any proceeding brought pursuant to subdivision (a) or (b) shall restrict the content of any person's speech. An order restricting the time, place, or manner of any person's speech shall do so only to the extent reasonably necessary to protect the peaceable exercise or enjoyment of constitutional or statutory rights, consistent with the constitutional rights of the person sought to be enjoined.

(Added by Stats.1987, c. 1277, §3. Amended by Stats.1990, c. 392 (A.B.2683), §1; Stats.1991, c. 607 (S.B.98), §3; Stats.2000, c. 98 (A.B.2719), § 3; Stats. 2001, c. 261 (A.B. 587), §2.)

§53 Restrictions upon transfer or use of realty because of sex, race, color, religion, ancestry, national origin, or disability

(a) Every provision in a written instrument relating to real property which purports to forbid or restrict the conveyance, encumbrance, leasing, or mortgaging of that real property to any person of a specified sex, race, color, religion, ancestry, national origin, or disability, is void and every restriction or prohibition as to the use or occupation of real property because of the user's or occupier's sex, race, color, religion, ancestry, national origin, or disability is void.

(b) Every restriction or prohibition, whether by way of covenant, condition upon use or occupation, or upon transfer of title to real property, which restriction or prohibition directly or indirectly limits the acquisition, use or occupation of that property because of the acquirer's, user's, or occupier's sex, race, color, religion, ancestry, national origin, or disability is void.

(c) In any action to declare that a restriction or prohibition specified in subdivision (a) or (b) is void, the court shall take judicial notice of the recorded instrument or instruments containing the prohibitions or restrictions in the same manner that it takes judicial notice of the matters listed in Section 452 of the Evidence Code.

(Added by Stats.1961, c. 1877 §1. Amended by Stats.1965, c. 299 §6, operative January 1, 1967; Stats.1974, c. 1193 §3; Stats.1987, c. 159 §5; Stats.1992, c. 913 (A.B. 1077) §3.8.)

§54 Right to streets, highways, and other public places; disability

(a) Individuals with disabilities or medical conditions have the same right as the general public to the full and free use of the streets, highways, sidewalks, walkways, public buildings, medical facilities, including hospitals, clinics, and physicians' offices, public facilities, and other public places.

(b) For purposes of this section:

(1) "Disability" means any mental or physical disability as defined in Section 12926 of the Government Code.

(2) "Medical condition" has the same meaning as defined in subdivision (h) of Section 12926 of the Government Code.

(c) A violation of the right of an individual under the Americans with Disabilities Act of 1990 (Public Law 101-336) also constitutes a violation of this section.

(Added by Stats.1968, c. 461 §1. Amended Stats.1992, c. 913 (A.B. 1077) §4; Stats.1994, c. 1257 (S.B.1240) §1; Stats 1996, c.498 (S.B. 1687), §1. Stats.2000, c. 1049 (A.B.2222), §4.)

§54.1 Access to public conveyances, places of public accommodation, amusement or resort, and housing accommodations

(a) **(1)** Individuals with disabilities shall be entitled to full and equal access, as other members of the general public, to accommodations, advantages, facilities, medical facilities, including hospitals, clinics, and physicians' offices, and privileges of all common carriers, airplanes, motor vehicles, railroad trains, motorbuses, streetcars, boats, or any other public conveyances or modes of transportation (whether private, public, franchised, licensed, contracted, or otherwise provided), telephone facilities, adoption agencies, private schools, hotels, lodging places, places of public accommodation, amusement, or resort, and other places to which the general public is invited, subject only to the conditions and limitations established by law, or state or federal regulation, and applicable alike to all persons.

(2) As used in this section, "telephone facilities" means tariff items and other equipment and services that have been approved by the Public Utilities Commission to be used by individuals with disabilities in a manner feasible and compatible with the existing telephone network provided by the telephone companies.

(3) "Full and equal access," for purposes of this section in its application to transportation, means access that meets the standards of Titles II and III of the Americans with Disabilities Act of 1990 (Public Law 101-336) and federal regulations adopted pursuant thereto, except that, if the laws of this state prescribe higher standards, it shall mean access that meets those higher standards.

(b) **(1)** Individuals with disabilities shall be entitled to full and equal access, as other members of the general public, to all housing accommodations offered for rent, lease, or compensation in this state, subject to the conditions and limitations established by law, or state or federal regulation, and applicable alike to all persons.

(2) "Housing accommodations" means any real property, or portion thereof, that is used or occupied, or is intended, arranged, or designed to be used or occupied, as the home, residence, or sleeping place of one or more human beings, but shall not include any accommodations included within subdivision (a) or any single-family residence the occupants of which rent, lease, or furnish for compensation not more than one room therein.

(3) **(A)** Any person renting, leasing, or otherwise providing real property for compensation shall not refuse to permit an individual with a disability, at that person's expense, to make reasonable modifications of the existing rented premises if the modifications are necessary to afford the person full enjoyment of the premises. However, any modifications under this paragraph may be conditioned on the disabled tenant entering into an agreement to restore the interior of the premises to the condition existing prior to the modifications. No additional security may be required on account of an election to make modifications to the rented premises under this paragraph, but the lessor and tenant may negotiate, as part of the agreement to restore the premises, a provision requiring the disabled tenant to pay an amount into an escrow account, not to exceed a reasonable estimate of the cost of restoring the premises.

(B) Any person renting, leasing, or otherwise providing real property for compensation shall not refuse to make reasonable accommodations in rules, policies, practices, or services, when those accommodations may be necessary to afford individuals with a disability equal opportunity to use and enjoy the premises.

(4) Nothing in this subdivision shall require any person renting, leasing, or providing for compensation real property to modify his or her property in any way or provide a higher degree of care for an individual with a disability than for an individual who is not disabled.

(5) Except as provided in paragraph (6), nothing in this part shall require any person renting, leasing, or providing for compensation real property, if that person refuses to accept tenants who have dogs, to accept as a tenant an individual with a disability who has a dog.

(6) **(A)** It shall be deemed a denial of equal access to housing accommodations within the meaning of this subdivision for any person, firm, or corporation to refuse to lease or rent housing accommodations to an individual who is blind or visually impaired on the basis that the individual uses the services of a guide dog, an individual who is deaf or hearing impaired on the basis that the individual uses the services of a signal dog, or to an individual with any other disability on the basis that the individual uses the services of a service dog, or to refuse to permit such an individual who is blind or visually impaired to keep a guide dog, an individual who is deaf or hearing impaired to keep a signal dog, or an individual with any other disability to keep a service dog on the premises.

(B) Except in the normal performance of duty as a mobility or signal aid, nothing contained in this paragraph shall be construed to prevent the owner of a housing accommodation from establishing terms in a lease or rental agreement that reasonably regulate the presence of guide dogs, signal dogs, or service dogs on the premises of a housing accommodation, nor shall this paragraph be construed to relieve a tenant from any liability otherwise imposed by law for real and personal property damages caused by such a dog when proof of the same exists.

(C) **(i)** As used in this subdivision, "guide dog" means any guide dog that was trained by a person licensed under the provisions of Chapter 9.5 (commencing with Section 7200) of Division 3 of the Business and Professions Code or as defined in the regulations implementing Title III of the Americans with Disabilities Act of 1990 (Public Law 101-336).

(ii) As used in this subdivision, "signal dog" means any dog trained to alert an individual who is deaf or hearing impaired to intruders or sounds.

(iii) As used in this subdivision, "service dog" means any dog individually trained to the requirements of the individual with a disability, including, but not limited to, minimal protection work, rescue work, pulling a wheelchair, or fetching dropped items.

(7) It shall be deemed a denial of equal access to housing accommodations within the meaning of this subdivision for any person, firm, or corporation to refuse to lease or rent housing accommodations to an individual who is blind or visually impaired, an individual who is deaf or hearing impaired, or other individual with a disability on the basis that the individual with a disability is partially or wholly dependent upon the income of his or her spouse, if the spouse is a party to the lease or rental agreement. Nothing in this

subdivision, however, shall, prohibit a lessor or landlord from considering the aggregate financial status of an individual with a disability and his or her spouse.

(c) Visually impaired or blind persons and persons licensed to train guide dogs for individuals who are visually impaired or blind pursuant to Chapter 9.5 (commencing with Section 7200) of Division 3 of the Business and Professions Code or guide dogs as defined in the regulations implementing Title III of the Americans with Disabilities Act of 1990 (Public Law 101-336), and persons who are deaf or hearing impaired and persons authorized to train signal dogs for individuals who are deaf or hearing impaired, and other individuals with a disability and persons authorized to train service dogs for individuals with a disability, may take dogs, for the purpose of training them as guide dogs, signal dogs, or service dogs in any of the places specified in subdivisions (a) and (b). These persons shall ensure that the dog is on a leash and tagged as a guide dog, signal dog, or service dog by identification tag issued by the county clerk, animal control department, or other agency, as authorized by Chapter 3.5 (commencing with Section 30850) of Division 14 of the Food and Agricultural Code. In addition, the person shall be liable for any provable damage done to the premises or facilities by his or her dog.

(d) A violation of the right of an individual under the Americans with Disabilities Act of 1990 (Public Law 101-336) also constitutes a violation of this section, and nothing in this section shall be construed to limit the access of any person in violation of that act.

(e) Nothing in this section shall preclude the requirement of the showing of a license plate or disabled placard when required by enforcement units enforcing disabled persons parking violations pursuant to Sections 22507.8 and 22511.8 of the Vehicle Code.

(Added by Stats.1968, c. 461, §1. Amended by Stats.1969, c. 832, §1; Stats.1972, c. 819, §1; Stats.1974, c. 108, §1; Stats.1976, c. 971, §1; Stats.1976, c. 972, §1.5; Stats.1977, c. 700, §1; Stats.1978 c. 380, §12; Stats.1979 c. 293, §1; Stats.1980, c. 773, §1; Amended by Stats.1988, c. 1595, §2; Stats.1992, c. 913 (A.B. 1077), §5; Stats.1993, c. 1149 (A.B. 1419), §4; Stats.1993, c. 1214 (A.B. 551), §1.5; Stats.1994, c. 1257 (S.B.1240), §2; Stats 1996, c.498 (S.B. 1687), §1.5.)

[1]42 U.S.C.A. §12101 et. Seq.

§54.2 Guide, signal or service dogs; right to accompany individuals with a disability and trainers; damages

(a) Every individual with a disability has the right to be accompanied by a guide dog, signal dog, or service dog, especially trained for the purpose, in any of the places specified in Section 54.1 without being required to pay an extra charge or security deposit for the guide dog, signal dog, or service dog. However, the individual shall be liable for any damage done to the premises or facilities by his or her dog.

(b) Individuals who are blind or otherwise visually impaired and persons licensed to train guide dogs for individuals who are blind or visually impaired pursuant to Chapter 9.5 (commencing with Section 7200) of Division 3 of the Business and Professions Code or as defined in regulations implementing Title III of the Americans with Disabilities Act of 1990 (Public Law 101-336)[1], and individuals who are deaf or hearing impaired and persons authorized to train signal dogs for individuals with who are deaf or hearing impaired, and individuals with a disability and persons who are authorized to train service dogs for the individuals with a disability may take dogs, for the purpose of training them as guide dogs, signal dogs, or service dogs in any of the places specified in Section 54.1 without being required to pay an extra charge or security deposit for the guide dog, signal dog, or service dog. However, the person shall be liable for any damage done to the premises or facilities by his or her dog. These persons shall ensure the dog is on a leash and tagged as a guide dog, signal dog, or service dog by an identification tag issued by the county clerk, animal control department, or other agency, as authorized by Chapter 3.5 (commencing with Section 30850) of Title 14 of the Food and Agricultural Code.

A violation of the right of an individual under the Americans with Disability Act of 1990 (Public Law 101-336) also constitutes a violation of this section, and nothing in this section shall be construed to limit the access of any person in violation of that act.

(c) As used in this section, the terms "guide dog," signal dog," and "service dog" have the same meanings as specified in Section 54.1.

(d) Nothing in this section precludes the requirement of the showing of a license plate or disabled placard when required by enforcement units enforcing disabled persons parking violations pursuant to Sections 22507.8 and 22511.8 of the Vehicle Code.

(Added by Stats.1968 c. 461 §1. Amended by Stats.1972, c. 819 §2; Stats.1979, c. 293 §2; Stats.1980, c. 773 §2; Stats.1988, c. 1595 §3; Stats.1992, c. 913 (A.B. 1077) §6; Stats.1994, c. 1257 (S.B.1240), §3; Stats 1996 c.498 (S.B. 1687), §2.)

[1]42 U.S.C.A. §12101 et. seq.

§54.3 Violations; liability

(a) Any person or persons, firm or corporation who denies or interferes with admittance to or enjoyment of the public facilities as specified in Sections 54 and 54.1 or otherwise interferes with the rights of an individual with a disability under Sections 54, 54.1 and 54.2 is liable for each offense for the actual damages and any amount as may be determined by a jury, or the court sitting without a jury, up to a maximum of three times the amount of actual damages but in no case less than one thousand dollars ($1,000), and attorney's fees as may be determined by the court in addition thereto, suffered by any person denied any of the rights provided in Sections 54, 54.1, and 54.2. "Interfere," for purposes of this section, includes, but is not limited to, preventing or causing the prevention of a guide dog, signal dog, or service dog from carrying out its functions in assisting a disabled person.

(b) Any person who claims to be aggrieved by an alleged unlawful practice in violation of Section 54, 54.1, or 54.2 may also file a verified complaint with the Department of Fair Employment and Housing pursuant to Section 12948 of the Government Code. The remedies in this section are nonexclusive and are in addition to any other remedy provided by law, including, but not limited to, any action for injunctive or other equitable relief available to the aggrieved party or brought in the name of the people of this state or of the United States.

(c) A person may not be held liable for damages pursuant to both this section and Section 52 for the same act or failure to act.

(Added by Stats.1968, c. 461 §1. Amended by Stats.1976, c. 971 §2; Stats.1976, c. 972, §2.5; Stats.1977, c. 881 §1; Stats.1981, c. 395 §1; Stats.1992, c. 913 (A.B. 1077) §7; Stats.1994, c. 1257 (S.B.1240), §4; Stats 1996, c.498 (S.B. 1687), §2.3)

§54.4 Blind pedestrian; failure to carry white cane

A blind or otherwise visually impaired pedestrian shall have all of the rights and privileges conferred by law upon other persons in any of the places, accommodations, or conveyances specified in Sections 54 and 54.1, notwithstanding the fact that the person is not carrying a predominately white cane (with or without a red tip), or using a guide dog. The failure of a blind or otherwise visually impaired person to carry such a cane or to use such a guide dog shall not constitute negligence per se.

(Added by Stats.1968, c. 461 §1. Amended by Stats.1994, c. 1257 (S.B.1240), §5.)

§54.5 White cane safety day; proclamation

Each year, the Governor shall publicly proclaim October 15 as White Cane Safety Day. He or she shall issue a proclamation in which:

(a) Comments shall be made upon the significance of this chapter.

(b) Citizens of the state are called upon to observe the provisions of this chapter and to take precautions necessary to the safety of disabled persons.

(c) Citizens of the state are reminded of the policies with respect to disabled persons declared in this chapter and he urges the citizens to cooperate in giving effect to them.

(d) Emphasis shall be made on the need of the citizenry to be aware of the presence of disabled persons in the community and to keep safe and functional for the disabled the streets, highways, sidewalks, walkways, public buildings, public facilities, other public places, places of public accommodation, amusement and resort, and other places to which the public is invited, and to offer assistance to disabled persons upon appropriate occasions.

(e) It is the policy of this state to encourage and enable disabled persons to participate fully in the social and economic life of the state and to engage in remunerative employment.

(Added by Stats.1968, c. 461 §1. Amended by Stats.1994, c. 1257 (S.B.1240), §6.)

§54.6 Visually Impaired

As used in this part, "visually impaired" includes blindness and means having central visual acuity not to exceed 20/200 in the better eye, with corrected lenses, as measured by the Snellen test, or visual acuity greater than 20/200, but with a limitation in the field of vision such that the widest diameter of the visual field subtends an angle is not greater than 20 degrees.

(Added by Stats.1968, c. 461 §1. Amended by Stats.1994, c. 1257 (S.B.1240), §7.)

§54.7 Zoos or wild animal parks; facilities for guide, service or signal dogs accompanying handicapped persons

(a) Notwithstanding any other provision of law, the provisions of this part shall not be construed to require zoos or wild animal parks to allow guide dogs, signal dogs, or service dogs to accompany individuals with a disability in areas of the zoo or park where zoo or park animals are not separated from members of the public by a physical barrier. As used in this section, "physical barrier" does not include an automobile or other conveyance.

(b) Any zoo or wild animal park that does not permit guide dogs, signal dogs, or service dogs, to accompany individuals with a disability therein shall maintain, free of charge, adequate kennel facilities for the use of guide dogs, signal dogs, or service dogs belonging to these persons. These facilities shall be of a character commensurate with the anticipated daily attendance of individuals with a disability. The facilities shall be in an area not accessible to the general public, shall be equipped with water and utensils for the consumption thereof, and shall otherwise be safe, clean, and comfortable.

(c) Any zoo or wild animal park that does not permit guide dogs to accompany blind or visually impaired persons therein shall provide free transportation to blind or visually impaired persons on any mode of transportation provided for members of the public.

Each zoo or wild animal park that does not permit service dogs to accompany individuals with a disability shall provide free transportation to individuals with a disability on any mode of transportation provided for a member of the public in cases where the person uses a wheelchair and it is readily apparent that the person is unable to maintain complete or independent mobility without the aid of the service dog.

(d) Any zoo or wild animal park that does not permit guide dogs to accompany blind or otherwise visually impaired persons therein shall provide sighted escorts for blind or otherwise visually impaired persons if they are unaccompanied by a sighted person.

(e) As used in this section, "wild animal park" means any entity open to the public on a regular basis, licensed by the United States Department of Agriculture under the Animal Welfare Act as an exhibit, and operating for the primary purposes of conserving, propagating, and exhibiting wild and exotic animals, and any marine, mammal, or aquatic park open to the general public.

(Added by Stats.1979, c. 525 §1. Amended by Stats.1988, c. 1595 §4; Stats.1994, c. 1257 (S.B.1240), §8.)

§54.8 Hearing impaired persons; assistive listening systems in civil or criminal proceedings; notice of need; availability; use in proceedings

(a) In any civil or criminal proceeding, including, but not limited to, traffic, small claims court, family court proceedings and services, and juvenile court proceedings, in any court-ordered or court-provided alternative dispute resolution, including mediation and arbitration, or in any administrative hearing of a public agency, where a party, witness, attorney, judicial employee, judge, juror, or other participant who is hearing impaired, the individual who is hearing impaired, upon his or her request, shall be provided with a functioning assistive listening system or a computer-aided transcription system. Any individual requiring this equipment shall give advance notice of his or her need to the appropriate court or agency at the time the hearing is set or not later than five days before the hearing.

(b) Assistive listening systems include, but are not limited to, special devices which transmit amplified speech by means of audio-induction loops, radio frequency systems (AM or FM), or infrared transmission. Personal receivers, headphones, and neck loops shall be available upon request by individuals who are hearing impaired.

(c) If a computer-aided transcription system is requested, sufficient display terminals shall be provided to allow the individual who is hearing impaired to read the real time transcript of the proceeding without difficulty.

(d) A sign shall be posted in a prominent place indicating the availability of, and how to request, an assistive listening system and a computer-aided transcription system. Notice of the availability of the systems shall be posted with notice of trials.

(e) Each superior court shall have at least one portable assistive listening system for use in any court facility within the county. When not in use, the system shall be stored in a location determined by the court.

(f) The Judicial Council shall develop and approve official forms for notice of the availability of assistive listening systems and computer-aided transcription systems for individuals who are hearing impaired. The Judicial Council shall also develop and maintain a system to record utilization by the courts of these assistive listening systems and computer-aided transcription systems.

(g) If the individual who is hearing impaired is a juror, the jury deliberation room shall be equipped with an assistive listening system or a computer-aided transcription system upon the request of the juror.

(h) A court reporter may be present in the jury deliberating room during a jury deliberation if the services of a court reporter for the purpose of operating a computer-aided transcription system are required for a juror who is hearing impaired.

(i) In any of the proceedings referred to in subdivision (a), or in any administrative hearing of a public agency, in which the individual who is hearing impaired is a party, witness, attorney, judicial employee, judge, juror, or other participant, and has requested use of an assistive listening system or computer-aided transcription system, the proceedings shall not commence until the system is in place and functioning.

(j) As used in this section, "individual who is hearing impaired" means an individual with a hearing loss, who, with sufficient amplification or a computer-aided transcription system, is able to fully participate in the proceeding.

(k) In no case shall this section be construed to prescribe a lesser standard of accessibility or usability than that provided by Title II of the Americans with Disabilities Act of 1990 (Public Law 101-336)[1] and federal regulations adopted pursuant to that act.

(Added by Stats.1989, c. 1002, §1. Amended Stats.1992, c. 913 (A.B. 1077), §8; Stats.1993, c. 1214 (A.B. 551), §2; Stats. 2001, c. 824(A.B. 1700), §1.)

[1]42 U.S.C.A. §12101 et.seq.

§55 Violations; injunction; action by person actually or potentially aggrieved

Any person who is aggrieved or potentially aggrieved by a violation of Section 54 or 54.1 of this code, Chapter 7 (commencing with Section 4450) of Division 5 of Title 1 of the Government Code, or Part 5.5 (commencing with Section 19955) of Division 13 of the Health and Safety Code may bring an action to enjoin the violation. The prevailing party in the action shall be entitled to recover reasonable attorney's fees.

(Added by Stats.1974, c. 1443 §1.)

§55.1 Violations; injunctions; district or city attorney, attorney general

In addition to any remedies available under the federal Americans with Disabilities Act of 1990, Public Law 101-336 (42 U.S.C. Sec. 12102), or other provisions of law, the district attorney, the city attorney, the Department of Rehabilitation acting through the Attorney General, or the Attorney General may bring an action to enjoin any violation of Section 54 or 54.1.

(Added by Stats.1976, c. 869 §1. Amended by Stats.1994, c. 1257 (S.B.1240), §9.)

§1360 Modification of unit by owner; facilitation of access for handicapped; approval by project association

(a) Subject to the provisions of the governing documents and other applicable provisions of law, if the boundaries of the separate interest are contained within a building, the owner of the separate interest may do the following:

(1) Make any improvements or alterations within the boundaries of his or her separate interest that do not impair the structural integrity or mechanical systems or lessen the support of any portions of the common interest development.

(2) Modify a unit in a condominium project, at the owner's expense, to facilitate access for persons who are blind, visually handicapped, deaf, or physically disabled, or to alter conditions which could be hazardous to these persons. These modifications may also include modifications of the route from the public way to the door of the unit for the purposes of this paragraph if the unit is on the ground floor or already accessible by an existing ramp or elevator. The right granted by this paragraph is subject to the following conditions.

(A) The modifications shall be consistent with applicable building code requirements.

(B) The modifications shall be consistent with the intent of otherwise applicable provisions of the governing documents pertaining to safety or aesthetics.

(C) Modifications external to the dwelling shall not prevent reasonable passage by other residents, and shall be removed by the owner when the unit is no longer occupied by persons requiring those modifications who are blind, visually handicapped, deaf, or physically disabled.

(D) Any owner who intends to modify a unit pursuant to this paragraph shall submit his or her plans and specifications to the association of the condominium project for review to determine whether the modifications will comply with the provisions of this paragraph. The association shall not deny approval of the proposed modifications under this paragraph without good cause.

(b) Any change in the exterior appearance of a separate interest shall be in accordance with the governing documents and applicable provisions of law.

(Added by Stats.1985, c. 874, §14.)

§1361 Common Areas

Unless the declaration otherwise provides:

(a) In a community apartment project and condominium project, and in those planned developments with common areas owned in common by the owners of the separate interests, there are appurtenant to each separate interest nonexclusive rights of ingress, egress, and support, if necessary, through the common areas. The common areas are subject to these rights.

(b) In a stock cooperative, and in a planned development with common areas owned by the association, there is an easement for ingress, egress, and support, if necessary, appurtenant to each separate interest. The common areas are subject to these easements.

(Added by Stats 1985, c. 874, §14.)

A. BLIND AND OTHER PHYSICALLY DISABLED PERSONS (continued)

Evidence Code

§754 Deaf or hearing impaired persons; interpreters; qualifications; guidelines; compensation; questioning; use of statements
§754.5 Privileged statements; deaf or hearing impaired persons; use of interpreter

§754 Deaf or hearing impaired persons; interpreters; qualifications; guidelines; compensation; questioning; use of statements

(a) As used in this section, "individual who is deaf or hearing impaired" means an individual with a hearing loss so great as to prevent his or her understanding language spoken in a normal tone, but does not include an individual who is hearing impaired provided with, and able to fully participate in the proceedings through the use of, an assistive listening system or computer-aided transcription equipment provided pursuant to Section 54.8 of the Civil Code.

(b) In any civil or criminal action, including, but not limited to, any action involving a traffic or other infraction, any small claims court proceeding, any juvenile court proceeding, any family court proceeding or service, or any proceeding to determine the mental competency of a person, in any court-ordered or court-provided alternative dispute resolution, including mediation and arbitration, or any administrative hearing, where a party or witness is an individual who is deaf or hearing impaired and the individual who is deaf or hearing impaired is present and participating, the proceedings shall be interpreted in a language that the individual who is deaf or hearing impaired understands by a qualified interpreter appointed by the court or other appointing authority, or as agreed upon.

(c) For purposes of this section, "appointing authority" means a court, department, board, commission, agency, licensing or legislative body, or other body for proceedings requiring a qualified interpreter.

(d) For the purposes of this section, "interpreter" includes, but is not limited to, an oral interpreter, a sign language interpreter, or a deaf-blind interpreter, depending upon the needs of the individual who is deaf or hearing impaired.

(e) For purposes of this section, "intermediary interpreter" means an individual who is deaf or hearing impaired, or a hearing individual who is able to assist in providing an accurate interpretation between spoken English and sign language or between variants of sign language or between American Sign Language and other foreign languages by acting as an intermediary between the individual who is deaf or hearing impaired and the qualified interpreter.

(f) For purposes of this section, "qualified interpreter" means an interpreter who has been certified as competent to interpret court proceedings by a testing organization, agency, or educational institution approved by the Judicial Council as qualified to administer tests to court interpreters for individuals who are deaf or hearing impaired.

(g) In the event that the appointed interpreter is not familiar with the use of particular signs by the individual who is deaf or hearing impaired or his or her particular variant of sign language, the court or other appointing authority shall, in consultation with the individual who is deaf or hearing impaired or his or her representative, appoint an intermediary interpreter.

(h) Prior to July 1, 1992, the Judicial Council shall conduct a study to establish the guidelines pursuant to which it shall determine which testing organizations, agencies, or educational institutions will be approved to administer tests for certification of court interpreters for individuals who are deaf or hearing impaired. It is the intent of the Legislature that the study obtain the widest possible input from the public, including, but not limited to, educational institutions, the judiciary, linguists, members of the State Bar, court interpreters, members of professional interpreting organizations, and members of the deaf and hearing-impaired communities. After obtaining public comment and completing its study, the Judicial Council shall publish these guidelines. By January 1, 1997, the judicial Council shall approve one or more entities to administer testing for court interpreters for individuals who aredeaf or hearing impaired. Testing entities may include educational institutions, testing organizations; joint powers agencies, or public agencies.

Commencing July 1, 1997, court interpreters for individuals who are deaf or hearing impaired shall meet the qualifications specified in subdivision (f).

(i) Persons appointed to serve as interpreters under this section shall be paid, in addition to actual travel costs, the prevailing rate paid to persons employed by the court to provide other interpreter services unless such service is considered to be a part of the person's regular duties as an employee of the state, county, or other political subdivision of the state. Payment of the interpreter's fee shall be a charge against the county, or other political subdivision of the state, in which that action is pending. Payment of the interpreter's fee in administrative proceedings shall be a charge against the appointing board or authority.

(j) Whenever a peace officer or any other person having a law enforcement or prosecutorial function in any criminal or quasi-criminal investigation or proceeding questions or otherwise interviews an alleged victim or witness who demonstrates or alleges deafness or hearing impairment, a good faith effort to secure the services of an interpreter shall be made, without any unnecessary delay unless either the individual who is deaf or hearing impaired affirmatively indicates that he or she does not need or cannot use an interpreter, or an interpreter is not otherwise required by Title II of the Americans with Disabilities Act of 1990 (Public Law 101-336)[1] and federal regulations adopted thereunder.

(k) No statement, written or oral, made by an individual who the court finds is deaf or hearing impaired in reply to a question of a peace officer, or any other person having a law enforcement or prosecutorial function in any criminal or quasi-criminal investigation or proceeding, may be used against that individual who is deaf or hearing impaired unless the question was accurately interpreted and the statement was made knowingly, voluntarily, and intelligently and was accurately interpreted, or the court makes special findings that either the individual could not have used an interpreter or an interpreter was not otherwise required by Title II of the Americans with Disabilities Act of 1990 (Public Law 101-336) and federal regulations adopted there under and that the statement was made knowingly, voluntarily, and intelligently.

(l) In obtaining services of an interpreter for purposes of subdivision (j) or (k), priority shall be given to first obtaining a qualified interpreter.

(m) Nothing in subdivision (j) or (k) shall be deemed to supersede the requirement of subdivision (b) for use of a qualified interpreter for individuals who are deaf or hearing impaired participating as parties or witnesses in a trial or hearing.

(n) In any action or proceeding in which an individual who is deaf of hearing impaired is a participant, the appointing authority shall not commence proceedings until the appointed interpreter is in full view of and spatially situated to assure proper communication with the participating individual who is deaf or hearing impaired.

(o) Each superior court shall maintain a current roster of qualified interpreters certified pursuant to subdivision (f).

(Amended by Stats.1977, c. 1182, §1; Stats.1984, c. 768, §2; Stats.1989, c. 1002, §2; Stats.1990, c. 1450 (S.B. 2046), §2; Stats.1991 c. 883 (S.B. 585), §1; Stats.1992, c. 118 (S.B.16), §1, effective July 7, 1992; Stats.1992, c. 913 (A.B.1077), §14; Stats 1995, c.143 (A.B. 1833), §1, eff. July 18, 1995.)

[1]42 U.S.C.A., §1201 et.seq.

§754.5 Privileged statements; deaf or hearing impaired persons; use of interpreter

Whenever an otherwise valid privilege exists between an individual who is deaf or hearing impaired and another person, that privilege is not waived merely because an interpreter was used to facilitate their communication.

(Added by Stats. 1990, c. 1450 (S.B.2046), §3. Amended by Stats.1992, c. 913 (A.B. 1077), §15.)

B. DISCRIMINATION

Government Code

§11135	Programs or activities funded by state; discrimination on basis of ethnic group identification, religion, age, sex, color, or disability; federal act; definition
§11136	Notice to contractor, grantee or local agency by state agency; probable cause to believe violation of statute or regulation; hearing
§11137	Action to curtail state funding upon determination of violation
§11138	Rules and regulations
§11139	Prohibitions and sanctions; construction of article
§11139.5	Standards and guidelines; establishment; assistance
§12955	Unlawful practices
§12955.1	Discrimination; disabled persons; design and construction of multifamily dwellings; building standards
§12955.2	Familial status
§12955.3	Disability
§12955.4	Religious organizations; preference to persons of same religion; restrictions
§12955.5	Discriminatory housing practices; collecting information
§12955.6	Construction with other laws
§12955.7	Coercion, intimidation, threats, or interference with rights
§12955.8	Unlawful practices; proof; business establishment
§12955.9	Housing for older persons; application
§12956	Retention of records upon notice of complaint
§19230.	Legislative declaration; state policy
§19231.	Definitions; judging undue hardship on a department program
§19232	Affirmative action programs; goals and timetables; state agencies
§19233	State personnel board; responsibilities
§19234	Review of hiring activities; disproportionate exclusion; correction of under representation
§19236	Plans to overcome under representations; responsibilities of state personnel board
§19237	Report

§11135 Programs or activities funded by state; discrimination on basis of ethnic group identification, religion, age, sex, color, or disability; federal act; definition

(a) No person in the State of California shall, on the basis of ethnic group identification, religion, age, sex, color, or disability, be unlawfully denied full and equal access to the benefits of, or be unlawfully subjected to discrimination under, any program or activity that is conducted, operated, or administered by the state or by any state agency, is funded directly by the state, or receives any financial assistance from the state.

(b) With respect to discrimination on the basis of disability, programs and activities subject to subdivision (a) shall meet the protections and prohibitions contained in Section 202 of the Americans with Disabilities Act of 1990 (42 U.S.C. Sec. 12132), and the federal rules and regulations adopted in implementation thereof, except that if the laws of this state prescribe stronger protections and prohibitions, the programs and activities subject to subdivision (a) shall be subject to the stronger protections and prohibitions.

(c) As used in this section, "disability" means any mental or physical disability as defined in Section 12926.

(Added by Stats.1977, c. 972, §1. Amended by Stats.1992, c. 913 (A.B. 1077), §18; Stats.1994, c. 146 (A.B.3601), §66; Stats. 2001, c. 708(A.B. 677), §1)

§11136 Notice to contractor, grantee or local agency by state agency; probable cause to believe violation of statute or regulation; hearing

Whenever a state agency that administers a program or activity that is funded directly by the state or receives any financial assistance from the state, has reasonable cause to believe that a contractor, grantee, or local agency has violated the provisions of Section 11135, or any regulation adopted to implement such section, the head of the state agency shall notify the contractor, grantee, or local agency of such violation and shall, after considering all relevant evidence, determine whether there is probable cause to believe that a violation of the provisions of Section 11135, or any regulation adopted to implement such section has occurred. In the event that it is

determined that there is probable cause to believe that the provisions of Section 11135, or any regulation adopted to implement such section, have been violated, the head of the state agency shall cause to be instituted a hearing conducted pursuant to the provisions of Chapter 5 (commencing with Section 11500) of this part to determine whether a violation has occurred.

(Added by Stats.1977, c. 972, p. 2942, §1.)

§11137 Action to curtail state funding upon determination of violation

If it is determined that a contractor, grantee, or local agency has violated the provisions of this article, the state agency that administers the program or activity involved shall take action to curtail state funding in whole or in part to such contractor, grantee, or local agency.

(Added by Stats.1977, c. 972, p. 2943, §1.)

§11138 Rules and regulations

Each state agency that administers a program or activity that is funded directly by the state or receives any financial assistance from the state and that enters into contracts for the performance of services to be provided to the public in an aggregate amount in excess of one hundred thousand dollars ($100,000) per year shall, in accordance with the provisions of Chapter 4.5 (commencing with Section 11371) of this part, adopt such rules and regulations as are necessary to carry out the purpose and provisions of this article.

(Added by Stats.1977, c. 972, p. 2943, §1.)

§11139 Prohibitions and sanctions; construction of article

The prohibitions and sanctions imposed by this article are in addition to any other prohibitions and sanctions imposed by law.

This article shall not be interpreted in a manner that would frustrate its purpose.

This article shall not be interpreted in a manner that would adversely affect lawful programs, which benefit the disabled, the aged, minorities and women.

This article and regulations adopted pursuant to this article may be enforced by a civil action for equitable relief, which shall be independent of any other rights and remedies.

(Added by Stats.1977, c. 972, p. 2943, §1; Amended by Stats. 1999, c. 591 (A.B. 1670), §3; Stats 2001, c. 708(A.B. 677), §2)

§11139.5 Standards and guidelines; establishment; assistance

The Secretary of the Health and Welfare Agency, with the advice and concurrence of the Fair Employment and Housing Commission, shall establish standards for determining which persons are protected by this article and standards for determining what practices are discriminatory. The secretary, with the cooperation of the Fair Employment and Housing Commission, shall assist state agencies in coordinating their programs and activities and shall consult with such agencies, as necessary, so that consistent policies, practices, and procedures are adopted with respect to the enforcement of the provisions of the article.

(Added by Stats.1977, c. 972, p. 2943, §1. Amended by Stats.1980, c. 992, p. 3138, §1; Stats.1982, c. 1270, p. 4691, §24.)

§12955 Unlawful practices

It shall be unlawful:

(a) For the owner of any housing accommodation to discriminate against or harass any person because of the race, color, religion, sex, sexual orientation, marital status, national origin, ancestry, familial status, source of income, or disability of that person.

(b) For the owner of any housing accommodation to make or to cause to be made any written or oral inquiry concerning the race, color, religion, sex, sexual orientation, marital status, national origin, ancestry, familial status, or disability of any person seeking to purchase, rent or lease any housing accommodation.

(c) For any person to make, print, or publish, or cause to be made, printed or published any notice, statement, or advertisement, with respect to the sale or rental of a housing accommodation that indicates any preference, limitation, or discrimination based on race, color, religion, sex, sexual orientation, marital status, national origin, ancestry, familial status, source of income, or disability or an intention to make any such preference, limitation, or discrimination.

(d) For any person subject to the provisions of Section 51 of the Civil Code, as that section applies to housing accommodations, to discriminate against any person on the basis of sex, sexual orientation, color, race, religion, ancestry, national origin, familial status, marital status, disability, source of income, or on any other basis prohibited by that section.

(e) For any person, bank, mortgage company or other financial institution that provides financial assistance for the purchase, organization, or construction of any housing accommodation to discriminate against any person or group of persons because of the race, color, religion, sex, sexual orientation, marital status, national origin, ancestry, familial status, source of income, or disability in the terms, conditions, or privileges relating to the obtaining or use of that financial assistance.

(f) For any owner of housing accommodations to harass, evict, or otherwise discriminate against any person in the sale or rental of housing accommodations when the owner's dominant purpose is retaliation against a person who has opposed practices unlawful under this section, informed law enforcement agencies of practices believed unlawful under this section, has testified or assisted in any proceeding under this part, or has aided or encouraged a person to exercise or enjoy the rights secured by this part. Nothing herein is intended to cause or permit the delay of an unlawful detainer action.

(g) For any person to aid, abet, incite, compel, or coerce the doing of any of the acts or practices declared unlawful in this section, or to attempt to do so.

(h) For any person, for profit, to induce any person to sell or rent any dwelling by representations regarding the entry or prospective entry into the neighborhood of a person or persons of a particular race, color, religion, sex, sexual orientation, marital status, ancestry, disability, source of income, familial status, or national origin.

(i) For any person or other organization or entity whose business involves real estate-related transactions to discriminate against any person in making available a transaction, or in the terms and conditions of a transaction, because of race, color, religion, sex, sexual orientation, marital status, national origin, ancestry, source of income, familial status, or disability.

(j) To deny a person access to, or membership or participation in, a multiple listing service, real estate brokerage organization, or other service because of race, color, religion, sex, sexual orientation, marital status, ancestry, disability, familial status, source of income, or national origin.

(k) To otherwise make unavailable or deny a dwelling based on discrimination because of race, color, religion, sex, sexual orientation, familial status, source of income, disability, or national origin.

(l) To discriminate through public or private land use practices, decisions, and authorizations because of race, color, religion, sex, sexual orientation, familial status, marital status, disability, national origin, source of income, or ancestry. Discrimination includes, but is not limited to, restrictive covenants, zoning laws, denials of use permits, and other actions authorized under the Planning and Zoning Law (Title 7 (commencing with Section 65000)), that make housing opportunities unavailable.

Discrimination under this subdivision also includes the existence of a restrictive covenant, regardless of whether accompanied by a statement that the restrictive covenant is repealed or void. This paragraph shall be come operative on January 1, 2001.

(m) As used in this section, “race, color, religion, sex, sexual orientation, marital status, national origin, ancestry, familial status, source of income, or disability” includes a perception that the person has any of those characteristics or that the person is associated with a person who has, or is perceived to have, any of those characteristics.

(n) To use a financial or income standard in the rental of housing that fails to account for the aggregate income of persons residing together or proposing to reside together on the same basis as the aggregate income of married persons residing together or proposing to reside together.

(o) In instances where there is a government rent subsidy, to use a financial or income standard in assessing eligibility for the rental of housing that is not based on the portion of the rent to be paid by the tenant.

(p) **(1)** For the purposes of this section, “source of income” means lawful, verifiable income paid directly to a tenant or paid to a representative of a tenant.

(2) For the purposes of this section, it shall not constitute discrimination based on source of income to make a written or oral inquiry concerning the level or source of income.

(q) This section shall remain in effect only until January 1, 2005, and as of that date is repealed, unless a later enacted statute, that is enacted before January 1, 2005, deletes or extends that date.

(Added by Stats.1980, c. 992, §4. Amended by Stats.1992, c. 182 (S.B.1234), §7; Stats.1993, c. 1277 (A.B.2244), §4; Added by Stats.1999, c.590, §5, operative Jan. 1, 2005; Stats 1999, c. 591 (A.B. 1670), §11.5, operative Jan. 1, 2005; Stats 1999, c. 592 (A.B. 1001), § 9.83, operative Jan. 1, 2005.)

§12955.1 Discrimination; disabled persons; design and construction of multifamily dwellings; building standards

For purposes of Section 12955, "discrimination" includes, but is not limited to, a failure to design and construct a covered multifamily dwelling in a manner that allows access to and use by disabled persons by providing, at a minimum, the following features:

(a) All covered multifamily dwellings shall have at least one building entrance on an accessible route, unless it is impracticable to do so because of the terrain or unusual characteristics of the site. The burden of establishing impracticability because of terrain or unusual site characteristics is on the person or persons who designed or constructed the housing facility.

(b) All covered multifamily dwellings with a building entrance on an accessible route shall be designed and constructed in a manner that complies with all of the following:

(1) The public and common areas are readily accessible to and useable by handicapped persons.

(2) All the doors designed to allow passage into and within all premises are sufficiently wide to allow passage by handicapped persons in wheelchairs.

(3) All premises within covered multifamily dwelling units contain the following features of adaptable design:

(A) An accessible route into and through the covered dwelling unit.

(B) Light switches, electrical outlets, thermostats, and other environmental controls in accessible locations.

(C) Reinforcements in bathroom walls to allow later installation of grab bars around the toilet, tub, shower stall, and shower seat, where those facilities are provided.

(D) Useable kitchens and bathrooms so that an individual in a wheelchair can maneuver about the space.

(c) For purposes of this section, "covered multifamily dwellings" mean buildings consisting of four or more dwelling units if the buildings have one or more elevators; and ground floor dwelling units in other buildings consisting of four or more dwelling units. Dwelling units within a single structure separated by firewalls do not constitute separate buildings.

(d) Notwithstanding Section 12935, regulations adopting building standards necessary to implement, interpret, or make specific the provisions of this section shall be developed by the Office of the State Architect for public housing and by the Department of Housing and Community Development for all other residential occupancies, and shall be adopted pursuant to Chapter 4 (commencing with Section 18935) of Part 2.5 of the Health and Safety Code. Prior to the effective date of regulations promulgated pursuant to this subdivision, existing federal accessibility standards that provide, to persons with disabilities, greater protections than existing state accessibility regulations shall apply. After regulations pursuant to this subdivision become effective, particular state regulations shall apply if they provide, to persons with disabilities, the same protections as, or greater protections than, the federal standards. If particular federal regulations provide greater protections than state regulations, then those federal standards shall apply. If the United States Department of Housing and Urban Development determines that any portion of the state regulations are not equivalent to the federal standards, the federal standards shall, as to those portions, apply to the design and construction of covered multifamily dwellings until the state regulations are brought into compliance with the federal standards. The appropriate state agency shall provide notice pursuant to the Administrative Procedures Act (Chapter 5 (commencing with Section 11500) of Part 5 of Division 3 of Title 2) of that determination.

(e) In investigating discrimination complaints, the department shall apply the building standards contained in Title 24 of the California Code of Regulations to determine whether a covered multifamily dwelling is designed and constructed for access to and use by disabled persons in accordance with this section.

(f) The building standard requirements for persons with disabilities imposed by this section shall meet or exceed the requirements under the federal Fair Housing Amendments Act of 1988 (P.L. 100-430) and its implementing regulations (24 C.F.R. 100.1 et seq.) and the existing state law building standards contained in Title 24 of the California Code of Regulations.

(Added by Stats 1992, c. 182 (S.B. 1234), §8. Amended by Stats 1993, c. 1277, (A.B. 2244), §5.)

§12955.2 Familial status

For purposes of this part, "familial status" means one or more individuals under 18 years of age who reside with a parent, another person with care and legal custody of that individual, a person who has been given care and custody of that individual by a state or local governmental agency that is responsible for the welfare of children, or the designee of that parent or other person with legal custody of any individual under 18 years of age by written consent of the parent or designated custodian. The protections afforded by this part against discrimination on the basis of familial status also apply to any individual who is pregnant, who is in the process of securing legal custody of any individual under 18 years of age, or who is in the process of being given care and custody of any individual under 18 years of age by a state or local governmental agency responsible for the welfare of children.

(Added by Stats. 1992, c. 182, (S.B. 1234), §9.)

§12955.3 Disability

For purposes of this part, “disability” includes, but is not limited to, any physical or mental disability as defined in Section 12926.

(Added by Stats. 1992, c. 182(S.B. 1234), §10. Amended by Stats.2000, c.1049 (A.B.2222), § 8.)

§12955.4 Religious organizations; preference to persons of same religion; restrictions

Nothing in this part shall prohibit a religious organization, association or society, or any nonprofit institution or organization operated, supervised, or controlled by or in conjunction with a religious organization, association, or society, from limiting the sale, rental, or occupancy of dwellings that it owns or operates for other than a commercial purpose to persons of the same religion or from giving preference to those persons, unless membership in that religion is restricted on account of race, color, or national origin.

(Added by Stats. 1992, c. 182, (S.B. 1234), §11.)

§12955.5 Discriminatory housing practices; collecting information
Nothing in this part shall preclude the government from establishing programs to collect information relating to discriminatory housing practices.

(Added by Stats. 1992, c. 182(S.B. 1234), §12.)

§12955.6 Construction with other laws
Nothing in this part shall be construed to afford to the classes protected under this part, fewer rights or remedies than the federal Fair Housing Amendments Act of 1988 (P.L. 100-430) and its implementing regulations (24 C.F.R. 100.1 et seq.), or state law relating to fair employment and housing as it existed prior to the effective date of this section. Any state law that purports to require or permit any action that would be an unlawful practice under this part shall to that extent be invalid. This part may be construed to afford greater rights and remedies to an aggrieved person than those afforded by federal law and other state laws.

(Added by Stats. 1992, c. 182 (S.B. 1234), §13. Amended by Stats. 1993, c. 1277 (A.B. 2244), §5.5)

§12955.7 Coercion, intimidation, threats, or interference with rights
It shall be unlawful to coerce, intimidate, threaten, or interfere with any person in the exercise or enjoyment of, or on account of that person having exercised or enjoyed, or on account of that person having aided or encouraged any other person in the exercise or enjoyment of, any right granted or protected by Section 12955 or 12955.1.

(Added by Stats. 1993, c. 1277 (A.B. 2244), §6.)

§12955.8 Unlawful practices; proof; business establishment
For purposes of this article, in connection with unlawful practices:

(a) Proof of an intentional violation of this article includes, but is not limited to, an act or failure to act that is otherwise covered by this part, that demonstrates an intent to discriminate in any manner in violation of this part. A person intends to discriminate if race, color, religion, sex, sexual orientation, familial status, marital status, disability, national origin, or ancestry is a motivating factor in committing a discriminatory housing practice even though other factors may have also motivated the practice. An intent to discriminate may be established by direct or circumstantial evidence.

(b) Proof of a violation causing a discriminatory effect is shown if an act or failure to act that is otherwise covered by this part, and that has the effect, regardless of intent, of unlawfully discriminating on the basis of race, color, religion, sex, sexual orientation, familial status, marital status, disability, national origin, or ancestry. A business establishment whose action or inaction has an unintended discriminatory effect shall not be considered to have committed an unlawful housing practice in violation of this part if the business establishment can establish that the action or inaction is necessary to the operation of the business and effectively carries out the significant business need it is alleged to serve. In cases that do not involve a business establishment, the person whose action or inaction has an unintended discriminatory effect shall not be considered to have committed an unlawful housing practice in violation of this part if the person can establish that the action or inaction is necessary to achieve an important purpose sufficiently compelling to override the discriminatory effect and effectively carries out the purpose it is alleged to serve.

(1) Any determination of a violation pursuant to this subdivision shall consider whether or not there are feasible alternatives that would equally well or better accomplish the purpose advanced with a less discriminatory effect.

(2) For purposes of this subdivision, the term "business establishment" shall have the same meaning as in Section 51 of the Civil Code.

(Added by Stats. 1993, c. 1277 (A.B. 2244 §7. Amended by Stats. 1999, c. 592 (A.B. 1001), §10.)

§12955.9 Housing for older persons; application
(a) The provisions of this part relating to discrimination on the basis of familial status shall not apply to housing for older persons.

(b) As used in this section, "housing for older persons" means any of the following:

(1) Housing provided under any state or federal program that the Secretary of Housing and Urban Development determines is specifically designed and operated to assist elderly persons, as defined in the state or federal program.

(2) Housing that meets the standards for senior housing in Sections 51.2, 51.3, and 51.4 of the Civil Code, except to the extent that those standards violate the prohibition of familial status discrimination in the federal Fair Housing Amendments Act of 1988 (P.L. 100-430) and implementing regulations.

(3) Mobile home parks that meet the standards for "housing for older persons" as defined in the federal Fair Housing Amendments Act of 1988 and implementing regulations.

(c) For purposes of this section, the burden of proof shall be on the owner to prove that the housing qualifies as housing for older persons.

(Added by Stats. 1993, c. 1277, (A.B. 2244), §8.)

§12956 Retention of records upon notice of complaint
Upon notice that a verified complaint against it has been filed under this part, any owner of housing accommodations shall maintain and preserve any and all rental records or any other written materials relevant to the complaint, until the complaint is fully and finally disposed of and all appeals or related proceedings terminated.

(Added by Stats. 1987, c. 605, §5.)

§19230 Legislative declaration; state policy
The Legislature hereby declares that:

(a) It is the policy of this state to encourage and enable individuals with a disability to participate fully in the social and economic life of the state and to engage in remunerative employment.

(b) It is the policy of this state that qualified individuals with a disability shall be employed in the state service, the service of the political subdivisions of the state, in public schools, and in all other employment supported in whole or in part by public funds on the same terms and conditions as the nondisabled, unless it is shown that the particular disability is job related.

(c) It is the policy of this state that a department, agency, or commission shall make reasonable accommodation to the known physical or mental limitations of an otherwise qualified applicant or employee who is an individual with a disability, unless the hiring authority can demonstrate that the accommodation would impose an undue hardship on the operation of its program. A department shall not deny any employment opportunity to a qualified applicant or employee who is an individual with a disability if the basis for the denial is the need to make reasonable accommodation to the physical or mental limitations of the applicant or employee.

(Added by Stats.1977, c. 1196, p. 3977, §2. Amended by Stats.1987, c. 292, §1; Stats.1992, c. 913 (A.B. 1077), §27.)

§19231 Definitions; judging undue hardship on a department program
As used in this article, “individual with a disability” means any individual who has a physical or mental disability as defined in Section 12926.

(Added by Stats.1977, c. 1196, §2. Amended by Stats.1987, c. 292, §2; Stats.1992, c. 913, (A.B. 1077), §28. Amended by Stats.2000, c.1048 (S.B. 2025), §1; Stats.2000, c.1049 (A.B. 2222), §9.)

§19232 Affirmative action programs; goals and timetables; state agencies.
Each state agency shall be responsible for establishing an effective affirmative action program to ensure individuals with a disability, who are capable of remunerative employment, access to positions in state service on an equal and competitive basis with the general population.

Each state agency shall develop and implement an affirmative action employment plan for individuals with a disability, which shall include goals and timetables. These goals and timetables shall be set annually for disabilities identified pursuant to guidelines established by the State Personnel Board, and shall be submitted to the board no later than June 1 of each year beginning in 1978, for review and approval or modification. Goals and timetables shall be made available to the public upon request.

(Added by Stats. 1997, c. 1196, p. 3977, §2. Amended by Stats. 1992, c. 913 (A.B. 1077), §29)

§19233 State personnel board; responsibilities
The State Personnel Board shall be responsible for the following:

(a) Outline specific actions to improve the representation of individuals with a disability in the state work force and to ensure equal and fair employment practices for employees who are individuals with a disability.

(b) Survey the number of individuals with a disability in each department by at least job category and salary range for the purpose of developing goals and timetables pursuant to Section 19232 and compare those numbers with the number of individuals with a disability in the work force.

(c) Establish guidelines for state agencies and departments to set goals and timetables to improve the representation of individuals with a disability in the state work force. Goals and timetables shall be set by at least job category.

(Added by Stats. 1977, c. 1196, p. 3977, §2. Amended by Stats. 1992, c. 913 (A.B. 1077), §30.)

§19234 Review of hiring activities; disproportionate exclusion; correction of under representation
Each state agency shall annually review its hiring activities designed to achieve the employment objectives established pursuant to subdivision (c) of Section 19233 to determine if any category of individuals with a disability have been disproportionately excluded on a non-job-related basis from employment. If any category has been so excluded, the agency shall correct that under representation.

(Added by Stats. 1977, c. 1196, p. 3977, §2. Amended by Stats. 1992, c. 913 (A.B. 1077), §31.)

§19236 Plans to overcome under representations; responsibilities of state personnel board
The State Personnel Board shall provide technical assistance, statewide advocacy, coordination, and monitoring of plans to overcome any under representation determined pursuant to Section 19234.

(Added by Stats. 1977, c. 1196, p. 3977, §2.)

§19237 Report
On or before November 15 of each year, beginning in 1978, the State Personnel Board shall report to the Governor and the Legislature on the current activity, future plans, and past accomplishments of the overall employment program for individuals with a disability in state government, including an evaluation of the achievement of annual employment objectives.

(Added by Stats. 1977, c. 1196, p. 3977, §2. Amended by Stats. 1992, c. 913(A.B. 1077), §33.)

C. DISCRIMINATION BY LICENSED PROFESSIONALS

Business and Professions Code

§125.6 Refusal to perform licensed activity; aiding or inciting refusal of performance by another licensee; discrimination or restriction in performance; race, color, sex, religion, ancestry, disability, marital status, or national origin

§125.6 Refusal to perform licensed activity; aiding or inciting refusal of performance by another licensee; discrimination or restriction in performance; race, color, sex, religion, ancestry, disability, marital status, or national origin

Every person who holds a license under the provisions of this code is subject to disciplinary action under the disciplinary provisions of this code applicable to such person if, because of the applicant's race, color, sex, religion, ancestry, disability, marital status, or national origin, he or she refuses to perform the licensed activity or aids or incites the refusal to perform such licensed activity by another licensee, or if, because of the applicant's race, color, sex, religion, ancestry, disability, marital status, or national origin, he or she makes any discrimination, or restriction in the performance of the licensed activity. Nothing in this section shall be interpreted to apply to discrimination by employers with regard to employees or prospective employees, nor shall this section authorize action against any club license issued pursuant to Article 4 (commencing with Section 23425) of Chapter 3 of Division 9 because of discriminatory membership policy. The presence of architectural barriers to an individual with physical disabilities, which conform to applicable state or local building codes and regulations shall not constitute discrimination under this section.

Nothing in this section requires a person licensed pursuant to Division 2 (commencing with Section 500) to permit an individual to participate in, or benefit from, the licensed activity of the licensee where that individual poses a direct threat to the health or safety of others. For this purpose, the term "direct threat" means a significant risk to the health or safety of others that cannot be eliminated by a modification of policies, practices, or procedures or by the provision of auxiliary aids and services.

"License," as used in this section, includes "certificate," "permit," "authority," and "registration" or any other indicia giving authorization to engage in a business or profession regulated by this code.

"Applicant," as used in this section means a person applying for licensed services provided by a person licensed under this code.

"Disability" means any of the following with respect to an individual:

(a) A physical or mental impairment that substantially limits one or more of the major life activities of the individual.

(b) A record of such an impairment.

(c) Being regarded as having such an impairment.

(Added by Stats.1974, c. 1350, §1. Amended by Stats.1977, c. 293, §1; Stats.1980, c. 191, §1; Stats.1992, ch. 913 (A.B.1077), §2.)

C. DISCRIMINATION BY LICENSED PROFESSIONALS (continued)

Insurance Code

§10144	Physically or mentally impaired person; coverage and rates
§10144.1	Disability insurer; claimant with terminal illness; experimental medical procedure or plan of treatment; coverage denial; notification requirements; review rights
§10144.2	Victims of domestic violence; health care service plans; enrollment, coverage or rate discrimination; underwriting coverage on basis of medical condition
§10145	Blindness or partial blindness

§10144 Physically or mentally impaired person; coverage and rates

No insurer issuing, providing, or administering any contract of individual or group insurance providing life, annuity, or disability benefits applied for and issued on or after January 1, 1984 shall refuse to insure, or refuse to continue to insure, or limit the amount, extent, or kind of coverage available to an individual, or charge a different rate for the same coverage solely because of a physical or mental impairment, except where the refusal, limitation or rate differential is based on sound actuarial principles or is related to actual and reasonably anticipated experience.

"Physical or mental impairment" means any physical, sensory, or mental impairment which substantially limits one or more of that person's major life activities.

(Added by Stats.1980, c. 352, p.697, §2; Amended by Stats.1982, c. 620, p. 2611, §1, operative January 1, 1984; Stats.1985, c. 971, §1.5.)

§10144.1 Disability insurer; claimant with terminal illness; experimental medical procedure or plan of treatment; coverage denial; notification requirements; review rights.

A disability insurer that denies coverage for an experimental medical procedure or plan of treatment for a claimant with a terminal illness, which for the purposes of this section refers to an incurable or irreversible condition that has a high probability of causing death within one year or less, under a disability insurance policy that includes hospital, medical, or surgical coverage issued in this state shall provide written notification directly to the claimant or representative, which shall include all of the following:

(a) The specific medical and scientific reasons for the denial and specific references to pertinent policy provisions upon which the denial is based.

(b) A description of the alternative medical procedures or treatments covered by the policy, if any. Compliance with this subdivision by an insurer shall not be construed to mean that the insurer is engaging in the unlawful practice of medicine.

(c) A description of the process by which the claimant or representative may exercise his or her right to appeal the denial and obtain and participate in a review of the information provided to the claimant or representative pursuant to subdivisions (a) and (b). The review shall not be limited to written communication and shall be provided by the appropriate named fiduciary or his or her designee rendering the decision. The review shall be provided to the claimant within 30 calendar days following the receipt of the request for review. However, the review required by this section shall be held within five business days if the treating physician determines, in consultation with the medical director of the insurer, based on standard medical practice, that the effectiveness of either the proposed treatment, services, or supplies or any alternative treatment, services, or supplies covered by the policy, would be materially reduced if not provided at the earliest possible date.

(Added by Stats.1994, c. 582(A.B. 3244), §2)

§10144.2 Victims of domestic violence; health care service plans; enrollment, coverage or rate discrimination; underwriting coverage on basis of medical condition

(a) No disability insurer covering hospital, medical, or surgical expenses shall deny, refuse to insure, refuse to renew, cancel, restrict, or otherwise terminate, exclude, or limit coverage or charge a different rate for the same coverage, on the basis that the applicant or insured person is, has been, or may be a victim of domestic violence.

(b) Nothing in this section shall prevent a disability insurer covering hospital, medical, or surgical expenses from underwriting coverage on the basis of the medical condition of an individual so long as the consideration of the condition (1) does not take into account whether such an individual's medical condition was caused by an act of domestic violence, (2) is the same with respect to an applicant or insured who is not the subject of domestic violence as with an applicant or insured who is the subject of domestic violence, and (3) does not violate any other act, regulation, or rule of law. The fact that an individual is, has been, or may be the subject of domestic violence shall not be considered a medical condition.

(c) As used in this section, "domestic violence" means domestic violence, as defined in Section 6211 of the Family Code.

(Added by Stats. 1995, c. 603(A.B. 1973), §2.)

§10145 Blindness or partial blindness

No insurer issuing, providing, or administering any contract of individual or group insurance providing life, annuity, or disability benefits applied for and issued on or after January 1, 1986, shall refuse to insure, or refuse to continue to insure, or limit the amount, extent, or kind of coverage available to an individual, or charge a different rate for the same coverage solely because of blindness or partial blindness.

"Blindness or partial blindness" means central visual acuity of not more than 20/200 in the better eye, after correction, or visual acuity greater than 20/200 but with a limitation in the fields of vision so that the widest diameter of the visual field subtends an angle no greater than 20 degrees, certified by a licensed physician and surgeon who specializes in diseases of the eye or a licensed optometrist.

(Added by Stats.1985, c. 971, §2.)

5. STATE HISTORIC BUILDING CODE
Division 13. Part 2.7.

Health and Safety Code

§18950	Short title
§18951	Purpose
§18952	Application
§18953	Intent
§18954	Repairs, alterations, and additions; application of building standards and building regulations; physically handicapped accessibility standard
§18955	Qualified historical building or structure
§18956	Application of Government Code, Public Resources Code, and other statutes and regulations
§18957	Authorized building and fire officials; performance of duties
§18958	Additional agencies authorized to adopt rules and regulations
§18959	Administration and enforcement
§18959.5	Alternative building standards, rules and regulations; historical buildings code board
§18960	State historical building code board
§18961	Review, enforcement and administration of variances, appeals procedure; agency to consider alternative provisions of the part and obtain review

§18950 Short Title
This part shall be known and may be cited as the "State Historical Building Code."

(Added by Stats. 1975, c. 906, p.2005, §1)

§18951 Purpose
It is the purpose of this part to provide alternative building regulations and building standards for the rehabilitation, preservation, restoration (including related reconstruction), or relocation of buildings or structures designated as historic buildings. Such alternative building standards and building regulations are intended to facilitate the restoration or change of occupancy so as to preserve their original or restored architectural elements and features, to encourage energy conservation and a cost effective approach to preservation, and to provide for the safety of the building occupants.

(Added by Stats.1975, c. 906, p.2005, §1. Amended Stats.1977, c. 707, p.2267, §1, effective September 8, 1977; Stats.1979, c. 1152, p.4304, §164.)

§18952 Application
This part shall apply to all qualified historical structures as defined in Section 18955.

(Added by Stats. 1975, c.906, p.2005, §1.)

§18953 Intent
It is the intent of this part to provide means for the preservation of the historical value of designated buildings and, concurrently, to provide reasonable safety from fire, seismic forces or other hazards for occupants of such buildings, and to provide reasonable availability to and usability by, the physically handicapped.

(Added by Stats.1975, c. 906, p.2005, §1. Amended by Stats.1981, c. 598, p. 2309, §1.)

§18954 Repairs, alterations, and additions; application of building standards and building regulations; physically handicapped accessibility standards
Repairs, alterations, and additions necessary for the preservation, restoration, rehabilitation, moving, or continued use of a historical building or structure may be made if they conform to this part. The building department of every city or county shall apply the provisions of alternative building standards and building regulations adopted pursuant to Section 18959.5 in permitting repairs, alterations, and additions necessary for the preservation, restoration, rehabilitation, safety, moving, or continued use of a historical building or structure. A state agency shall apply the alternative building regulations adopted pursuant to Section 18959.5 in permitting repairs,

alterations, and additions necessary for the preservation, restoration, rehabilitation, safety, moving or continued use of a historical building or structure.

The application of any alternative standards for the provision of access to the physically handicapped or exemption from access requirements shall be done on a case-by-case basis and item-by-item basis, and shall not be applied to an entire building or structure without individual consideration of each item, and shall not be applied to related sites or areas except on an item-by-item basis.

(Added by Stats.1975, c. 906, p. 2005, §1. Amended by Stats.1979, c. 1152, p. 4304, §165; Stats.1981, c. 598, p. 2309, §2; Stats.1984, c. 1314, §1, operative July 1, 1985; Stats.1990, c. 625 (S.B. 2775), §1.)

§18955 Qualified historical building or structure

For the purposes of this part, a qualified historical building or structure is any structure, collection of structures, and their associated sites deemed of importance to the history, architecture, or culture of an area by an appropriate local or state governmental jurisdiction. This shall include structures on existing or future national, state or local historical registers or official inventories, such as the National Register of Historic Places, State Historical Landmarks, State Points of Historical Interest, and city or county registers or inventories of historical or architecturally significant sites, places, historic districts or landmarks.

(Added by Stats.1975, c. 906, p. 3006, §1. Amended by Stats.1977, c. 707, p. 2267, §2, effective September 8, 1977.)

§18956 Application of Government Code, Public Resources Code, and other statutes and regulations

The application of the provisions of Part 5.5 (commencing with Section 19955) of Division 13 of this code, Chapter 7 (commencing with Section 4450) of Division 5 of Title 1 of the Government Code, Division 15 (commencing with Section 25000) of the Public Resources Code, and of any other statute or regulation, as they may apply to qualified historical buildings or structures, shall be governed by this part.

(Added by Stats.1975, c. 906, p.2006, §1. Amended by Stats.1976, c. 192, p. 372, §1, effective May 28, 1976; Stats.1978, c. 555, p. 1729, §1, effective August 25, 1978; Stats.1980, c. 676, p. 1951, §169.)

§18957 Authorized building and fire officials; performance of duties

Nothing in this part shall be construed to prevent authorized building or fire officials from the performance of their duties when in the process of protecting the public health, safety, and welfare.

(Added by Stats. 1957, c. 906, p.2006, §1.)

§18958 Additional agencies authorized to adopt rules and regulations

Except as provided in Section 18930, the following state agencies, in addition to the State Historical Building Safety Board, shall have the authority to adopt rules and regulations pursuant to the State Historical Building Code governing the rehabilitation, preservation, restoration, related reconstruction, safety, or relocation of qualified historical buildings and structures within their jurisdiction:

(a) The Office of the State Architect.

(b) The State Fire Marshal.

(c) The State Building Standards Commission, but only with respect to approval of building standards.

(d) The Department of Housing and Community Development.

(e) The Department of Transportation.

(f) Other state agencies that may be affected by this part.

(Added by Stats.1975, c. 906, p.2006, §1. Amended by Stats.1979, c. 1152, p.4305, §166; Stats.1981, c. 598, p.2310, §3; Stats.1984, c. 1314, §2, operative July 1, 1985; Stats.1990, c. 625 (S.B. 2775), §3.)

§18959 Administration and enforcement

(a) Except as otherwise provided in Part 2.5 (commencing with Section 18901), all the state agencies shall administer and enforce this part with respect to qualified historical buildings or structures under their respective jurisdiction.

(b) Except as otherwise provided in Part 2.5 (commencing with Section 18901), all local building authorities shall administer and enforce this part with respect to qualified historical buildings or structures under their respective jurisdictions where applicable.

(c) The State Historical Building Safety Board shall coordinate and consult with the other applicable state agencies affected by this part and, except as provided in Section 18943, disseminate provisions adopted pursuant to this part to all local building authorities and state agencies at cost.

(d) Regulations adopted by the State Fire Marshal pursuant to this part shall be enforced in the same manner as regulations are enforced under Sections 13145, 13146, and 13146.5.

(e) Regular and alternative building standards published in the California Building Standards Code shall be enforced in the same manner by the same governmental entities as provided by law.

(f) When administering and enforcing the provisions of this part, all local agencies may make changes or modifications in the requirements contained in the State Historical Building Code, as described in Section 18944.7, as it determines are reasonably necessary because of local climatic, geological, seismic, and topographical conditions. The local agency shall make an express finding that the modifications or changes are needed, and the finding shall be available as a public record. A copy of the finding and change or modification shall be filed with the State Historical Building Safety Board. No modification or change shall become effective or operative for any purpose until the finding and modification or change has been filed with the board.

(Added by Stats.1975, c. 906, p.2006, §1. Amended by Stats.1977, c. 707, p.2267, §3, effective September 8, 1977; Stats.1979, c. 1152, p 4305, §167; Stats.1981, c. 598, p.2310, §4; Stats.1984, c. 1314, §3, operative July 1, 1985; Stats.1985, c. 106, §84; Stats.1990, c. 625 (S.B. 2775), §5; Amended by Stats. 1997, c. 580(S.B.320), §10)

§18959.5 Alternative building standards, rules and regulations; historical buildings code board

Subject to the applicable provisions of Part 2.5 (commencing with Section 18901) of this division, the State Historical Building Safety Board shall adopt and submit alternative building standards for approval pursuant to Chapter 4 (commencing with Section 18935) of Part 2.5 of this division and may adopt, amend, and repeal other alternative rules and regulations under this part which the board has recommended for adoption under subdivision (b) of Section 18960 by the State Architect or other appropriate state agencies.

(Added by Stats.1977, c. 707, p.2268, §4, effective September 8, 1977. Amended by Stats.1979, c. 1152, p. 4305, §168; Stats.1984, c. 1314, §4, operative July 1, 1985; Stats.1990, c. 625, (S.B. 2775) §7.)

§18960 State historical building code board

(a) A State Historical Building Safety Board is hereby established within the Office of the State Architect which shall be composed of qualified experts in their respective fields who shall represent various state and local public agencies, professional design societies and building and preservation oriented organizations.

(b) This board shall act as a consultant to the State Architect and to the other applicable state agencies. The board shall recommend to the State Architect and the other applicable state agencies rules and regulations for adoption pursuant to this part.

(c) The board shall also act as a review body to state and local agencies with respect to interpretations of this part as well as on matters of administration and enforcement of it. The board's decisions shall be reported in printed form.

(1) Notwithstanding subdivision (b) of Section 18945, if any local agency administering and enforcing this part or any person adversely affected by any regulation, rule, omission, interpretation, decision, or practice of this agency representing a building standard wishes to appeal the issue for resolution to the State Historical

Building Safety Board, these parties may appeal to the board. The board may accept the appeal only if it determines that issues involved in the appeal have statewide significance.

(2) The State Historical Building Safety Board shall, upon making a decision on an appeal pursuant to paragraph (1), send a copy to the State Building Standards Commission.

(3) Requests for interpretation by local agencies of the provisions of this part may be accepted for review by the State Historical Building Safety Board. A copy of an interpretation decision shall be sent to the State Building Standards Commission in the same manner as paragraph (2).

(4) The State Historical Building Safety Board may charge a reasonable fee, not to exceed the cost of the service, for requests for copies of their decisions and for requests for reviews by the board pursuant to paragraph (1) or (3). All funds collected pursuant to this paragraph shall be deposited in the State Historical Building Code Fund, which is hereby established, for use by the State Historical Building Safety Board. The State Historical Building Code Fund and the fees collected therefore, and the budget of the State Historical Safety Board, shall be subject to annual appropriation in the Budget Act.

(5) Local agencies may also charge reasonable fees not to exceed the cost for making an appeal pursuant to paragraph (1) to persons adversely affected as described in that appeal.

(6) All other appeals involving building standards under this part shall be made as set forth in subdivision (a) of Section 18945.

(d) The board shall be composed of representatives of state agencies and public and professional building design, construction, and preservation organizations experienced in dealing with historic buildings. Unless otherwise indicated, each named organization shall appoint its own representatives. Each of the following shall have one member on the board who shall serve without pay, but shall receive actual and necessary expenses incurred while serving on the board:

(1) Office of the State Architect.

(2) The State Fire Marshal.

(3) The State Historical Resources Commission.

(4) The California Occupational Safety and Health Standards Board.

(5) California Council, American Institute of Architects.

(6) Structural Engineers Association of California.

(7) A mechanical engineer, Consulting Engineers Association of California.

(8) An electrical engineer, Consulting Engineers Association of California.

(9) California Council of Landscape Architects.

(10) The Department of Housing and Community Development.

(11) The Department of Parks and Recreation.

(12) County Supervisors Association of California.

(13) League of California Cities.

(14) The Office of Statewide Health Planning and Development.

(15) The Department of Rehabilitation.

(16) The California Chapter of the American Institute of City Planners.

(17) The Department of Transportation.

(18) The California Preservation Foundation.

(19) The Seismic Safety Commission.

(20) The California Building Officials.

The 20 members listed above shall select a building contractor as a member of the board. The members shall serve without pay, but shall receive actual and necessary expenses incurred while serving on the board.

Each of the appointing authorities shall appoint, in the same manner as for members, an alternate in addition to a member. The alternate member shall serve in place of the member at such meetings of the board as the member is unable to attend. The alternate shall have all of the authority that the member would have when the alternate is attending in the place of the member. The board may appoint, from time to time, as it deems necessary, consultants who shall serve without pay but shall receive actual and necessary expenses as approved by the board.

(e) The term of membership on the board shall be for four years, with the State Architect's representative serving continually until replaced. Vacancies on the board shall be filled in the same manner as original appointments. The board shall annually select a chairperson from among the members of the board.

(Added by Stats.1975, c. 906, p.2007, §1. Amended by Stats.1977, c. 1001, p.3003, §1; Stats.1981, c. 598, p.2311, §5; Stats.1984, c. 1314, §5, operative July 1, 1985; Stats.1990, c. 625 (S.B. 2775), §9.)

§18961 Review, enforcement and administration of variances, appeals procedure; agency to consider alternative provisions of this part and obtain review

All state agencies which enforce and administer approvals, variances, or appeals procedures or decisions affecting the preservation or safety of the historical aspects of historical buildings shall use the alternative provisions of this part and shall consult with the State Historical Building Safety Board to obtain its review prior to undertaking action or making decisions on variances or appeals which affect historical buildings.

(Added by Stats.1982, c. 1358, §3. Amended by Stats.1984, c. 1314, §6, operative July 1, 1985; Stats.1990, c. 625 (S.B. 2775), §11.)

6. POLLING PLACES

Elections Code

§225	Repealed by Stats.1994, c. 920 (S.B.1547), §1
§226	Repealed by Stats.1994, c. 920 (S.B.1547), §1
§227	Repealed by Stats.1994, c. 920 (S.B.1547), §1
§228	Repealed by Stats.1994, c. 920 (S.B.1547), §1
§1638.5	Repealed by Stats.1994, c. 920 (S.B.1547), §1
§10010.2	Repealed by Stats.1994, c. 920 (S.B.1547), §1
§14234	Repealed by Stats.1994, c. 920 (S.B.1547), §1

7. RECREATION

Division 5. Chapter 2.6. Public Playground Equipment
(Public Resources Code 5410, 5411.)

Division 4. Chapter 22. Design
(California Code Regulations Title 22)

A. PUBLIC PLAYGROUND EQUIPMENT

Public Resources Code

§5410 Legislative findings and declarations
§5411 Purchase of equipment usable by physically handicapped persons
§65720 Design

§5410 Legislative findings and declarations

The Legislature hereby finds and declares that playground equipment accessible to and usable by all persons regardless of physical condition is becoming increasingly available. The Legislature further finds and declares that it is a matter of statewide interest and concern that all public agencies providing playgrounds utilize such facilities to the maximum extent possible, and, where feasible, provide playground equipment usable by both able-bodied and physically disabled persons so as to integrate able-bodied and physically disabled persons within such playgrounds.

(Added by Stats.1978, c. 1006, §1.)

§5411 Purchase of equipment usable by physically handicapped persons

All public agencies operating playgrounds, including state agencies, cities, counties, a city and county, school districts and other districts, shall, with respect to new playground equipment purchased on or after January 1, 1979, provide that a portion of the equipment within the playground is accessible and usable by all persons regardless of their physical condition whenever such equipment is available at a quality and cost which is comparable to the quality and cost of standard equipment.

(Added by Stats.1978, c. 1006, §1.)

§65720 Design

Operators shall design or redesign playgrounds, locate or relocate playground equipment and routes of access to and from playgrounds, and surface o resurface portions of playgrounds to comply with the following requirements:

(a) Section 4.2 of the CPSC Handbook – Critical Height

(b) Section 4.3 of the CPSC Handbook – Fall Heights for Equipment

(c) Section 4.4 of the CPSC Handbook – Equipment to Which Protective Surfacing Recommendations Do Not Apply

(d) Section 5 of the CPSC Handbook – Use Zones for Equipment, in its entirety

(e) Section 9 of the ASTM Standard – Playground Layout, in its entirety

(f) Section 10 of the ASTM Standard – Accessibility, in its entirety

(g) Section 11.2 of the ASTM Standard – Owner's/Operator's Responsibilities for Installation.

(Authority cited: Sections 100275 and 115725, Health and Safety Code. Reference: Sections 115725 and 115735, Health and Safety Code. CCR, Title 22 Social Security, Division 4 Environmental Health. New section filed 12-22-99; operative 1-1-2000 pursuant to Government Code section 11343.4(d) (Register 99, No. 52).

8. MEETINGS

Government Code

§54950	Declaration, intent; sovereignty
§54950.5	Short title
§54951	Local agency
§54951.1, 54951.7	Repealed
§54952	Legislative body, definition
§54952.1	Member of a legislative body of a local agency; conduct
§54952.2	Meeting; prohibited devices for obtaining collective concurrence; exclusions from chapter.
§54952.3, 54952.5	Repealed
§54952.6	Action taken
§54952.7	Copies of chapter to members of legislative body of local agencies
§54953	Meetings to be open and public; attendance; video teleconferencing
§54953.1	Testimony of members before grand jury
§54953.3	Conditions to attendance
§54953.5	Right to record proceedings; conditions; tape or film records made by or under direction of local agencies
§54953.6	Prohibitions or restrictions on broadcasts of proceedings of legislative body; reasonable findings
§54953.7	Allowance of greater access to meetings than minimal standards in this chapter
§54954	Time and place of regular meetings; special meetings; emergencies
§54954.1	Mailed notice to persons who filed written request; time; duration and renewal of requests; fee
§54954.2	Agenda; posting; action on other matters
§54954.3	Opportunity for public to address legislative body; adoption of regulations; public criticism of policies
§54954.4	Reimbursements to local agencies and school districts for costs
§54954.5	Closed session item descriptions
§54954.6	New or increased taxes or assessments; public meetings and public hearings; joint notice requirements
§54955	Adjournment; adjourned meetings
§54955.1	Continuance
§54956	Special meetings; call; notice
§54956.5	Emergency meetings in emergency situations
§54956.6	Fees
§54956.7	Closed sessions, license applications; rehabilitated criminals
§54956.8	Real property transactions; closed meeting with negotiator
§54956.86	Closed sessions; insurance pooling; tort liability losses; public liability losses; workers' compensation liability
§54957	Closes sessions; personnel matters; exclusion of witnesses
§54957.1	Closed sessions; public report of action taken
§54957.2	Minute book record of closed sessions; inspection
§54957.5	Agendas and other writings distributed for discussion or consideration at public meetings; public records; inspection; closed sessions
§54957.6	Closed sessions; salaries, salary schedules or fringe benefits
§54957.7	Disclosure of items to be discussed in closed sessions
§54957.8	Closed sessions; legislative body of a multijurisdictional drug law enforcement agency
§54957.9	Disorderly conduct of general public during meeting; clearing of room
§54958	Application of chapter
§54959	Penalty for unlawful meeting
§54960	Actions to stop or prevent violations of meeting provisions; applicability of meeting provisions; validity of rules or actions on recording closed sessions
§54960.1	Unlawful action by legislative body; action for mandamus or injunction; preprequisites

§54960.5	Costs and attorney fees
§54961	Meetings prohibited in facilities; grounds; identify of victims of tortuous sexual conduct or child abuse
§54962	Closed session by legislative body prohibited
§11120	Public policy; legislative finding and declaration; citation of article
§11121	State body defined
§11121.2	Repealed
§11121.5	Repealed
§11121.7	State body; representative of state body
§11121.8	Repealed
§11121.9	Provision of copy of article to members of state body
§11121.95	Appointees or elected officials not yet in office; conformity of conduct to articulate requirements
§11122	Action taken
§11122.5	Meeting defined: Collective concurrence prohibited; exceptions
§11123	Meetings; attendance; teleconference option
§11124	Conditions to attendance
§11124.1	Tape or film recording of proceedings; inspection of state's recording; broadcast restrictions
§11125	Notice of meeting
§11125.1	Agendas and other writings distributed for discussion or consideration at public meetings; public records; Franchise Tax Board; inspection; closed sessions
§11125.2	Appointment, employment or dismissal of public employees; closed sessions; public report
§11125.3	Action on items of business not appearing on agenda; notice
§11125.4	Special meetings; authorized purposes; notice; required finding of hardship or need to protect public interest
§11125.5	Emergency meetings
§11125.6	Fish & Game Commission; emergency meetings; appeals of fishery closures or restrictions
§11125.7	Agenda item discussion before state body; opportunity for public address; regulation by state body; freedom of expression; application of provisions
§11125.8	Hearings to consider crimes against minors or crimes of sexual assault or domestic violence; identification of applicant; disclosure of nature of hearing
§11125.9	Regional water of quality control boards; compliance with notification guidelines
§11126	Closed sessions
§11126.1	Record of topics discussed and decisions made at closed sessions; availability
§11126.3	Disclosure of nature of items to be discussed in closed session; scope of session; notice of meeting; announcement pending litigation; unnecessary disclosures; disclosures at open session following closed session
§11126.5	Disorderly conduct of general public during meeting; clearing of room
§11126.7	Fees
§11127	Application of article
§11128	Time of closed session
§11128.5	Adjournment; declaration; notice; hour for reconvened meeting
§11129	Continuance; posting notice
§11130	Actions to prevent violations or determine applicability of article; validity of rules discovery expression; taping of closed sessions; discovery procedures for tapes
§11130.3	Judicial determination action by state body in violation of §§11123 or 11125 null and void; action by interested person; grounds
§11130.5	Court costs and attorney fees
§11130.7	Violations; misdemeanor
§11131	Use of facility allowing discrimination; state agency
§11131.5	Identity of victims or alleged victims of crimes; tortuous sexual conduct, or child abuse; public disclosure
§11132	Closed session by state body prohibited

§54950 Declaration, intent; sovereignty

In enacting this chapter, the Legislature finds and declares that the public commissions, boards and councils and the other public agencies in this State exist to aid in the conduct of the people's business. It is the intent of the law that their actions be taken openly and that their deliberations be conducted openly.

The people of this State do not yield their sovereignty to the agencies which serve them. The people, in delegating authority, do not give their public servants the right to decide what is good for the people to know and what is not good for them to know. The people insist on remaining informed so that they may retain control over the instruments they have created.

(Added by Stats.1953, c.1588, p.3270, §1.)

§54950.5 Short Title

This chapter shall be known as the Ralph M. Brown Act.

(Added by Stats.1961, c. 115, p.1127, §1.)

§54951 Local agency, definition

As used in this chapter, "local agency" means a county, city, whether general law or chartered, city and county, town, school district, municipal corporation, district, political subdivision, or any board, commission or agency thereof, or other local public agency.

(Added by Stats.1953, c. 1588, p.3270, §1. Amended by Stats.1959, c. 1417, p.3696, §1.)

§54951.1 Repealed by Stats.1993, c. 1138 (S.B.1140), §2.3, operative April 1, 1994

§54951.7 Repealed by Stats.1993, c. 1138 (S.B.1140), §2.5, operative April 1, 1994

§54952 Legislative body, definition

As used in this chapter, "legislative body" means:

(a) The governing body of a local agency or any other local body created by state or federal statute.

(b) A commission, committee, board, or other body of a local agency, whether permanent or temporary, decision making or advisory, created by charter, ordinance, resolution, or formal action of a legislative body. However, advisory committees, composed solely of the members of the legislative body which are less than a quorum of the legislative body are not legislative bodies, except that standing committees of a legislative body, irrespective of their composition, which have a continuing subject matter jurisdiction, or a meeting schedule fixed by charter, ordinance, resolution, or formal action of a legislative body are legislative bodies for purposes of this chapter.

(c) **(1)** A board, commission, committee, or other multimember body that governs a private corporation or entity that either:

(A) Is created by the elected legislative body in order to exercise authority that may lawfully be delegated by the elected governing body to a private corporation or entity.

(B) Receives funds from a local agency and the membership of whose governing body includes a member of the legislative body of the local agency appointed to that governing body as a full voting member by the legislative body of the local agency.

(2) Notwithstanding subparagraph (B) of paragraph (1), no board, commission, committee, or other multimember body that governs a private corporation or entity that receives funds from a local agency and, as of February 9, 1996, has a member of the legislative body of the local agency as a full voting member of the governing body of that private corporation or entity shall be relieved from the public meeting requirements of this chapter by virtue of a change in status of the full voting member to a nonvoting member.

(d) The lessee of any hospital the whole or part of which is first leased pursuant to subdivision (p) of Section 32121 of the Health and Safety Code after January 1, 1994, where the lessee exercises any material authority of

a legislative body of a local agency delegated to it by that legislative body whether the lessee is organized and operated by the local agency or by a delegated authority.

(Added by Stats.1953, c. 1588, p.3270, §1. Amended by Stats.1961, c. 1671, p.3637, §1; Stats.1993, c. 1138 (S.B.1140), §3, operative April 1, 1994; Stats.1996, c. 1134 (S.B.1504), §1.)

§54952.1 Member of a legislative body of a local agency; conduct

Any person elected to serve as a member of a legislative body who has not yet assumed the duties of office shall conform his or her conduct to the requirements of this chapter and shall be treated for purposes of enforcement of this chapter as if he or she has already assumed office.

(Added by Stats.1993, c. 1137 (S.B.36), §1, operative April 1, 1994. Amended by Stats.1994, c. 32 (S.B.752), §2, eff. March 30, 1994, operative April 1, 1994.)

§54952.2 Meeting; prohibited devices for obtaining collective concurrence; exclusions from chapter

(a) As used in this chapter, "meeting" includes any congregation of a majority of the members of a legislative body at the same time and place to hear, discuss, or deliberate upon any item that is within the subject matter jurisdiction of the legislative body or the local agency to which it pertains.

(b) Except as authorized pursuant to Section 54953, any use of direct communication, personal intermediaries, or technological devices that is employed by a majority of the members of the legislative body to develop a collective concurrence as to action to be taken on an item by the members of the legislative body is prohibited.

(c) Nothing in this section shall impose the requirements of this chapter upon any of the following:

(1) Individual contacts or conversations between a member of a legislative body and any other person.

(2) The attendance of a majority of the members of a legislative body at a conference or similar gathering open to the public that involves a discussion of issues of general interest to the public or to public agencies of the type represented by the legislative body, provided that a majority of the members do not discuss among themselves, other than as part of the scheduled program, business of a specified nature that is within the subject matter jurisdiction of the local agency. Nothing in this paragraph is intended to allow members of the public free admission to a conference or similar gathering at which the organizers have required other participants or registrants to pay fees or charges as a condition of attendance.

(3) The attendance of a majority of the members of a legislative body at an open and publicized meeting organized to address a topic of local community concern by a person or organization other than the local agency, provided that a majority of the members do not discuss among themselves, other than as part of the scheduled program, business of a specific nature that is within the subject matter jurisdiction of the legislative body of the local agency.

(4) The attendance of a majority of the members of a legislative body at an open and noticed meeting of another body of the local agency, or at an open and noticed meeting of a legislative body of another local agency, provided that a majority of the members do not discuss among themselves, other than as part of the scheduled meeting, business of a specific nature that is within the subject matter jurisdiction of the legislative body of the local agency.

(5) The attendance of a majority of the members of a legislative body at a purely social or ceremonial occasion, provided that a majority of the members do not discuss among themselves business of a specific nature that is within the subject matter jurisdiction of the legislative body of the local agency.

(6) The attendance of a majority of the members of a legislative body at an open and noticed meeting of a standing committee of that body, provided that the members of the legislative body who are not members of the standing committee attend only as observers.

(Added by Stats.1993, c. 1137 (S.B.36), §2, operative April 1, 1994. Amended by Stats.1994, c. 32 (S.B.752), §3, effective March 30, 1994, operative April 1, 1994; Amended by Stats.1997, c. 253 (S.B.138), §1.)

§54952.3 Repealed by Stats.1993, c.1138 (S.B.1140), §5, operative April 1, 1994

§54952.5 Repealed by Stats.1993, c.1138 (S.B.1140), §6, operative April 1, 1994

§54952.6 Action taken, definition

As used in this chapter, "action taken" means a collective decision made by a majority of the members of a legislative body, a collective commitment or promise by a majority of the members of a legislative body to make a positive or a negative decision, or an actual vote by a majority of the members of a legislative body when sitting as a body of entity, upon a motion, proposal, resolution, order or ordinance.

(Added by Stats.1961, c. 1671, p.3637, §3.)

§54952.7 Copies of chapter to members of legislative body of local agencies

A legislative body of a local agency may require that a copy of this chapter be given to each member of the legislative body and any person elected to serve as a member of the legislative body who has not assumed the duties of office. An elected legislative body of a local agency may require that a copy of this chapter be given to each member of each legislative body all or a majority of whose members are appointed by or under the authority of the elected legislative body.

(Added by Stats.1980, c. 1284, p.4341, §17. Amended by Stats.1981, c. 968, §27; Stats.1993, c. 1136 (A.B.1426), §3, operative April 1, 1994; Stats.1993, c. 1137 (S.B.36), §3, operative April 1, 1994; Stats.1993, c. 1138 (S.B.1140), §7, operative April 1, 1994.)

§54953 Meetings to be open and public; attendance; video teleconferencing

(a) All meetings of the legislative body of a local agency shall be open and public, and all persons shall be permitted to attend any meeting of the legislative body of a local agency, except as otherwise provided in this chapter.

(b) **(1)** Notwithstanding any other provision of law, the legislative body of a local agency may use teleconferencing for the benefit of the public and the legislative body of a local agency in connection with any meeting or proceeding authorized by law. The teleconferenced meeting or proceeding shall comply with all requirements of this chapter and all otherwise applicable provisions of law relating to a specific type of meeting or proceeding.

(2) Teleconferencing, as authorized by this section, may be used for all purposes in connection with any meeting within the subject matter jurisdiction of the legislative body. All votes taken during a teleconferenced meeting shall be by roll call.

(3) If the legislative body of a local agency elects to use teleconferencing, it shall post agendas at all teleconference locations and conduct teleconference meetings in a manner that protects the statutory and constitutional rights of the parties or the public appearing before the legislative body of a local agency. Each teleconference location shall be identified in the notice and agenda of the meeting or proceeding, and each teleconference location shall be accessible to the public. During the teleconference, at least a quorum of the members of the legislative body shall participate from locations within the boundaries of the territory over which the local agency exercises jurisdiction. The agenda shall provide an opportunity for members of the public to address the legislative body directly pursuant to Section 54954.3 at each teleconference location.

(4) For the purposes of this section, " teleconference" means a meeting of a legislative body, the members of which are in different locations, connected by electronic means, through either audio or video, or both. Nothing in this section shall prohibit a local agency from providing the public with additional teleconference locations.

(c) No legislative body shall take action by secret ballot, whether preliminary or final.

(Added by Stats.1953, c. 1588, p.3270, §1. Amended by Stats.1988, c. 399, §1; Stats.1993, c. 1136(A.B.1426). §4, operative April 1, 1994; Stats.1993, c. 1137 (S.B.36), §4, operative April 1, 1994; Stats.1994, c. 32 (S.B.752), §4, eff. March 30, 1994, operative April 1, 1994.)

For text of section added by Stats.1998, c.399, §2, see Government Code §54953, post.

§54953.1 Testimony of members before grand jury
The provisions of this chapter shall not be construed to prohibit the members of the legislative body of a local agency from giving testimony in private before a grand jury, either as individuals or as a body.

(Added by Stats.1979, c. 950, p. 3277, §1.)

§54953.3 Conditions to attendance
A member of the public shall not be required, as a condition to attendance at a meeting of a legislative body of a local agency, to register his or her name, to provide other information, to complete a questionnaire, or otherwise to fulfill any condition precedent to his or her attendance.

If an attendance list, register, questionnaire, or other similar document is posted at or near the entrance to the room where the meeting is to be held, or is circulated to the persons present during the meeting, it shall state clearly that the signing, registering, or completion of the document is voluntary, and that all persons may attend the meeting regardless of whether a person signs, registers, or completes the document.

(Added by Stats.1957, c.85, p. 664, §1. Amended by Stats.1981, c.968, §28.)

§54953.5 Right to record proceedings; conditions; tape or film records made by or under direction of local agencies
(a) Any person attending an open and public meeting of a legislative body of a local agency shall have the right to record the proceedings with an audio or video tape recorder or a still or motion picture camera in the absence of a reasonable finding by the legislative body of the local agency that the recording cannot continue without noise, illumination, or obstruction of view that constitutes, or would constitute, a persistent disruption of the proceedings.

(b) Any tape or film record of an open and public meeting made for whatever purpose by or at the direction of the local agency shall be subject to inspection pursuant to the California Public Records Act (Chapter 3.5 (commencing with Section 6250) of Division 7 of Title 1), but, notwithstanding Section 34090, may be erased or destroyed 30 days after the taping or recording. Any inspection of a video or tape recording shall be provided without charge on a video or tape player made available by the local agency.

(Added by Stats.1980, c. 1284, p. 4341, §18. Amended by Stats.1993, c. 1136 (A.B.1426), §5, operative April 1, 1994; Stats.1993, c. 1137 (S.B.36), §5, operative April 1, 1994; Stats.1994, c. 32 (S.B. 752), §5, eff. March 30, 1994, operative April 1, 1994.)

§54953.6 Prohibitions or restrictions on broadcasts of proceedings of legislative body; reasonable findings
No legislative body of a local agency shall prohibit or otherwise restrict the broadcast of its open and public meetings in the absence of a reasonable finding that the broadcast cannot be accomplished without noise, illumination, or obstruction of view that would constitute a persistent disruption of the proceedings.

(Added by Stats.1993, c. 1136 (A.B.1426), §6, operative April 1, 1994; Stats.1993, c. 1137 (S.B.36), §6, operative April 1, 1994. Amended by Stats.1994, c.32 (S.B.752), §6, eff. March 30, 1994, operative April 1, 1994.)

§54953.7 Allowance of greater access to meetings than minimal standards in this chapter
Notwithstanding any other provision of law, legislative bodies of local agencies may impose requirements upon themselves which allow greater access to their meetings than prescribed by the minimal standards set forth in this chapter. In addition thereto, an elected legislative body of a local agency may impose such requirements on those appointed legislative bodies of the local agency of which all or a majority of the members are appointed by or under the authority of the elected legislative body.

(Added by Stats.1981, c. 968, §29.)

§54954 Time and place of regular meetings; special meetings; emergencies
(a) Each legislative body of a local agency, except for advisory committees or standing committees shall provide, by ordinance, resolution, bylaws, or by whatever other rule is required for the conduct of business by that body, the time and place for holding regular meetings. Meetings of advisory committees or standing committees,

for which an agenda is posted at least 72 hours in advance of the meeting pursuant to subdivision (a) of Section 54954.2, shall be considered for purposes of this chapter as regular meetings of the legislative body.

(b) Regular and special meetings of the legislative body shall be held within the boundaries of the territory over which the local agency exercises jurisdiction, except to do any of the following:

(1) Comply with state or federal law or court order, or attend a judicial or administrative proceeding to which the local agency is a party.

(2) Inspect real or personal property, which cannot be conveniently brought within the boundaries of the territory over which the local agency exercises jurisdiction provided that the topic of the meeting is limited to items directly related to the real or personal property.

(3) Participate in meetings or discussions of multiagency significance that are outside the boundaries of a local agency's jurisdiction. However, any meeting or discussion held pursuant to this subdivision shall take place within the jurisdiction of one of the participating local agencies and be noticed by all participating agencies as provided for in this chapter.

(4) Meet in the closest meeting facility if the local agency has no meeting facility within the boundaries of the territory over which the local agency exercises jurisdiction, or at the principal office of the local agency if that office is located outside the territory over which the agency exercises jurisdiction.

(5) Meet outside their immediate jurisdiction with elected or appointed officials of the United States or the State of California when a local meeting would be impractical, solely to discuss a legislative or regulatory issue affecting the local agency and over which the federal or state officials have jurisdiction.

(6) Meet outside their immediate jurisdiction if the meeting takes place in or nearby a facility owned by the agency, provided that the topic of the meeting is limited to items directly related to the facility.

(7) Visit the office of the local agency's legal counsel for a closed session on pending litigation held pursuant to Section 54956.9, when to do so would reduce legal fees or costs.

(c) Meetings of the governing board of a school district shall be held within the district except under the circumstances enumerated in subdivision (b), or to do any of the following:

(1) Attend a conference on nonadversarial collective bargaining techniques.

(2) Interview members of the public residing in another district with reference to the trustees' potential employment of the superintendent of that district.

(3) Interview a potential employee from another district.

(d) Meetings of a joint powers authority shall occur within the territory of at least one of its member agencies, or as provided in subdivision (b). However, a joint powers authority which has members throughout the state may meet at any facility in the state which complies with the requirements of Section 54961.

(e) If, by reason of fire, flood, earthquake, or other emergency, it shall be unsafe to meet in the place designated, the meetings shall be held for the duration of the emergency at the place designated by the presiding officer of the legislative body or his or her designee in a notice to the local media that have requested notice pursuant to Section 54956, by the most rapid means of communication available at the time.

(Added by Stats.1953, c. 1588, p. 3270, §1. Amended by Stats.1993, c. 1136 (A.B.1426), §7, operative April 1, 1994; Stats.1993, c. 1137 (S.B.36), §7, operative April 1, 1994; Stats.1994, c. 32 (S.B.752), §7, eff. March 30, 1994, operative April 1, 1994; Amended by Stats.1997, c. 253 (S.B.138), §3; Stats.1998, c. 260 (S.B.139), §2.)

§54954.1 Mailed notice to persons who filed written request; time; duration and renewal of requests; fee
Any person may request that a copy of the agenda, or a copy of all the documents constituting the agenda packet, of any meeting of a legislative body be mailed to that person. Upon receipt of the written request, the legislative

body or its designee shall cause the requested materials to be mailed at the time the agenda is posted pursuant to Section 54954.2 and 54956 or upon distribution to all, or a majority of all, of the members of a legislative body, whichever occurs first. Any request for mailed copies of agendas or agenda packets shall be valid for the calendar year in which it is filed, and must be renewed following January 1 of each year. The legislative body may establish a fee for mailing the agenda or agenda packet, which fee shall not exceed the cost of providing the service. Failure of the requesting person to receive the agenda or agenda packet pursuant to this section shall not constitute grounds for invalidation of the actions of the legislative body taken at the meeting for which the agenda or agenda packet was not received.

(Added by Stats.1973, c.1070, p.2151, §1. Amended by Stats.1990, c. 1198 (A.B. 4065), §1; Amended by Stats.1997, c.253 (S.B.138), §4.)

§54954.2 Agenda; posting; action on other matters

(a) At least 72 hours before a regular meeting, the legislative body of the local agency, or its designee shall post an agenda containing a brief general description of each item of business to be transacted or discussed at the meeting, including items to be discussed in closed session. A brief general description of an item generally need not exceed 20 words. The agenda shall specify the time and location of the regular meeting and shall be posted in a location that is freely accessible to members of the public.

No action or discussion shall be undertaken on any item not appearing on the posted agenda, except that members of a legislative body or its staff may briefly respond to statements made or questions posed by persons exercising their public testimony rights under Section 54954.3. In addition, on their own initiative or in response to questions posed by the public, a member of a legislative body or its staff may ask a question for clarification, make a brief announcement, or make a brief report on his or her own activities. Furthermore, a member of a legislative body, or the body itself, subject to rules or procedures of the legislative body, may provide a reference to staff or other resources for factual information, request staff to report back to the body at a subsequent meeting concerning any matter, or take action to direct staff to place a matter of business on a future agenda.

(b) Notwithstanding subdivision (a), the legislative body may take action on items of business not appearing on the posted agenda under any of the conditions stated below. Prior to discussing any item pursuant to this subdivision, the legislative body shall publicly identify the item.

(1) Upon a determination by a majority vote of the legislative body that an emergency situation exists, as defined in Section 54956.5.

(2) Upon a determination by a two-thirds vote of the members of the legislative body present at the meeting, or, if less than two-thirds of the members are present, a unanimous vote of those members present, that there is a need to take immediate action and that the need for action came to the attention of the local agency subsequent to the agenda being posted as specified in subdivision (a).

(3) The item was posted pursuant to subdivision (a) for a prior meeting of the legislative body occurring not more than five calendar days prior to the date action is taken on the item, and at the prior meeting the item was continued to the meeting at which action is being taken.

(Added by Stats.1986, c. 641, §5. Amended by Stats.1993, c. 1136 (A.B.1426), §8, operative April 1, 1994; Stats.1993, c. 1137 (S.B.36), §8, operative April 1, 1994; Stats.1994, c. 32 (S.B.752), §8, eff. March 30, 1994, operative April 1, 1994; Am/ended by Stats.1997, c. 253 (S.B.138), §5.)

§54954.3 Opportunity for public to address legislative body; adoption of regulations; public criticism of policies

(a) Every agenda for regular meetings shall provide an opportunity for members of the public to directly address the legislative body on any item of interest to the public, before or during the legislative body's consideration of the item, that is within the subject matter jurisdiction of the legislative body, provided that no action shall be taken on any item not appearing on the agenda unless the action is otherwise authorized by subdivision (b) of Section 54954.2. However, the agenda need not provide an opportunity for members of the public to address the legislative body on any item that has already been considered by a committee, composed exclusively of members of the legislative body, at a public meeting wherein all interested members of the public were afforded the opportunity to address the committee on the item, before or during the committee's consideration of the item,

unless the item has been substantially changed since the committee heard the item, as determined by the legislative body. Every notice for a special meeting shall provide an opportunity for members of the public to directly address the legislative body concerning any item that has been described in the notice for the meeting before or during consideration of that item.

(b) The legislative body of a local agency may adopt reasonable regulations to ensure that the intent of subdivision (a) is carried out, including, but not limited to, regulations limiting the total amount of time allocated for public testimony on particular issues and for each individual speaker.

(c) The legislative body of a local agency shall not prohibit public criticism of the policies, procedures, programs, or services of the agency, or of the acts or omissions of the legislative body. Nothing in this subdivision shall confer any privilege or protection for expression beyond that otherwise provided by law.

(Added by Stats.1986, c. 641, §6. Amended by Stats. 1991, c. 66 (S.B.100), §1; Stats.1993, c. 1136 (A.B.1426), §9, operative April 1, 1994; Stats. 1993, c. 1137 (S.B. 36), §9, operative April 1, 1994; Stats. 1994, c. 32 (S.B. 752), §9, eff. March 30, 1994, operative April 1, 1994.)

§54954.4 Reimbursements to local agencies and school districts for costs

(a) The Legislature hereby finds and declares that Section 12 of Chapter 641 of the Statutes of 1986, authorizing reimbursement to local agencies and school districts for costs mandated by the state pursuant to that act, shall be interpreted strictly. The intent of the Legislature is to provide reimbursement for only those costs which are clearly and unequivocally incurred as the direct and necessary result of compliance with Chapter 641 of the Statutes of 1986.

(b) In this regard, the Legislature directs all state employees and officials involved in reviewing or authorizing claims for reimbursement, or otherwise participating in the reimbursement process, to rigorously review each claim and authorize only those claims, or parts thereof, which represent costs which are clearly and unequivocally incurred as the direct and necessary result of compliance with Chapter 641 of the Statutes of 1986 and for which complete documentation exists. For purposes of Section 54954.2, costs eligible for reimbursement shall only include the actual cost to post a single agenda for any one meeting.

(c) The Legislature hereby finds and declares that complete, faithful, and uninterrupted compliance with the Ralph M. Brown Act (Chapter 9 (commencing with Section 54950) of Part 1 of Division 2 of Title 5 of the Government Code) is a matter of overriding public importance. Unless specifically stated, no future Budget Act, or related budget enactments, shall, in any manner, be interpreted to suspend, eliminate, or otherwise modify the legal obligation and duty of local agencies to fully comply with Chapter 641 of the Statutes of 1986 in a complete, faithful, and uninterrupted manner.

§54954.5 Closed session item descriptions

For purposes of describing closed session items pursuant to Section 54954.2, the agenda may describe closed sessions as provided below. No legislative body or elected official shall be in violation of Section 54954.2 or 54956 if the closed session items were described in substantial compliance with this section. Substantial compliance is satisfied by including the information provided below, irrespective of its format.

(a) With respect to a closed session held pursuant to Section 54956.7:

LICENSE/PERMIT DETERMINATION
Applicant(s): (Specify number of applicants)

(b) With respect to every item of business to be discussed in closed session pursuant to Section 54956.8:

CONFERENCE WITH REAL PROPERTY NEGOTIATORS
Property: (Specify street address, or if no street address, the parcel number or other unique reference, of the real property under negotiation)

Agency negotiator: (Specify names of negotiators attending the closed session) (If circumstances necessitate the absence of a specified negotiator, an agent or designee may participate in place of the

absent negotiator so long as the name of the agent or designee is announced at an open session held prior to the closed session.)

Negotiating parties: (Specify name of party (not agent))

Under negotiation: (Specify whether instruction to negotiator will concern price, terms of payment, or both)

(c) With respect to every item of business to be discussed in closed session pursuant to Section 54956.9:

CONFERENCE WITH LEGAL COUNSEL--EXISTING LITIGATION
(Subdivision (a) of Section 54956.9)

Name of case: (Specify by reference to claimant's name, names of parties, case or claim numbers)

or

Case name unspecified: (Specify whether disclosure would jeopardize service of process or existing settlement negotiations)

CONFERENCE WITH LEGAL COUNSEL--ANTICIPATED LITIGATION
Significant exposure to litigation pursuant to subdivision (b) of Section 54956.9: (Specify number of potential cases)

(In addition to the information noticed above, the agency may be required to provide additional information on the agenda or in an oral statement prior to the closed session pursuant to subparagraphs (B) to (E), inclusive, of paragraph (3) of subdivision (b) of Section 54956.9.)

Initiation of litigation pursuant to subdivision (c) of Section 54956.9: (Specify number of potential cases)

(d) With respect to every item of business to be discussed in closed session pursuant to Section 54956.95:

LIABILITY CLAIMS
Claimant: (Specify name unless unspecified pursuant to Section 54961)

Agency claimed against: (Specify name)

(e) With respect to every item of business to be discussed in closed session pursuant to Section 54957:

THREAT TO PUBLIC SERVICES OR FACILITIES
Consultation with: (Specify name of law enforcement agency and title of officer)

PUBLIC EMPLOYEE APPOINTMENT
Title: (Specify description of position to be filled)

PUBLIC EMPLOYMENT
Title: (Specify description of position to be filled)

PUBLIC EMPLOYEE PERFORMANCE EVALUATION
Title: (Specify position title of employee being reviewed)

PUBLIC EMPLOYEE DISCIPLINE/DISMISSAL/RELEASE
(No additional information is required in connection with a closed session to consider discipline, dismissal, or release of a public employee. Discipline includes potential reduction of compensation.)

(f) With respect to every item of business to be discussed in closed session pursuant to Section 54957.6:

CONFERENCE WITH LABOR NEGOTIATORS
Agency designated representatives: (Specify names of designated representatives attending the closed session) (If circumstances necessitate the absence of a specified designated representative, an agent or designee may participate in place of the absent representative so long as the name of the agent or designee is announced at an open session held prior to the closed session.)

Employee organization: (Specify name of organization representing employee or employees in question)

or

Unrepresented employee: (Specify position title of unrepresented employee who is the subject of the negotiations)

(g) With respect to closed sessions called pursuant to Section 54957.8:

CASE REVIEW/PLANNING
(No additional information is required in connection with a closed session to consider case review or planning.)

(h) With respect to every item of business to be discussed in closed session pursuant to Sections 1461, 32106, and 32155 of the Health and Safety Code or Sections 37606 and 37624.3 of the Government Code:

REPORT INVOLVING TRADE SECRET
Discussion will concern: (Specify whether discussion will concern proposed new service, program, or facility)

Estimated date of public disclosure: (Specify month and year)

HEARINGS
Subject matter: (Specify whether testimony/deliberation will concern staff privileges, report of medical audit committee, or report of quality assurance committee)

(i) With respect to every item of business to be discussed in closed session pursuant to Section 54956.86:

CHARGE OR COMPLAINT INVOLVING INFORMATION PROTECTED BY FEDERAL LAW

(No additional information is required in connection with a closed session to discuss a charge or complaint pursuant to Section 54956.86.)

(Amended by Stats.1998, c.260 (S.B.139), §2.5, Stats.1998, c. 876 (S.B.1649) §11.1.)

§54954.6 New or increased taxes or assessments; public meetings and public hearings; joint notice requirements

(a) (1) Before adopting any new or increased general tax or any new or increased assessment, the legislative body of a local agency shall conduct at least one public meeting at which local officials shall allow public testimony regarding the proposed new or increased general tax or new or increased assessment in addition to the noticed public hearing at which the legislative body proposes to enact or increase the general tax or assessment.

For purposes of this section, the term "new or increased assessment" does not include any of the following:

(A) A fee that does not exceed the reasonable cost of providing the services, facilities, or regulatory activity for which the fee is charged.

(B) A service charge, rate, or charge, unless a special district's principal act requires the service charge, rate, or charge to conform to the requirements of this section.

(C) An ongoing annual assessment if it is imposed at the same or lower amount as any previous year.

(D) An assessment that does not exceed an assessment formula or range of assessments previously specified in the notice given to the public pursuant to subparagraph (G) of paragraph (2) of subdivision (c) and that was previously adopted by the agency or approved by the voters in the area where the assessment is imposed.

(E) Standby or immediate availability charges.

(2) The legislative body shall provide at least 45 days' public notice of the public hearing at which the legislative body proposes to enact or increase the general tax or assessment. The legislative body shall provide notice for the public meeting at the same time and in the same document as the notice for the public hearing, but the meeting shall occur prior to the hearing.

(b) **(1)** The joint notice of both the public meeting and the public hearing required by subdivision (a) with respect to a proposal for a new or increased general tax shall be accomplished by placing a display advertisement of at least one-eighth page in a newspaper of general circulation for three weeks pursuant to Section 6063 and by a first-class mailing to those interested parties who have filed a written request with the local agency for mailed notice of public meetings or hearings on new or increased general taxes. The public meeting pursuant to subdivision (a) shall take place no earlier than 10 days after the first publication of the joint notice pursuant to this subdivision. The public hearing shall take place no earlier than seven days after the public meeting pursuant to this subdivision. Notwithstanding paragraph (2) of subdivision (a), the joint notice need not include notice of the public meeting after the meeting has taken place. The public hearing pursuant to subdivision (a) shall take place no earlier than 45 days after the first publication of the joint notice pursuant to this subdivision. Any written request for mailed notices shall be effective for one year from the date on which it is filed unless a renewal request is filed. Renewal requests for mailed notices shall be filed on or before April 1 of each year. The legislative body may establish a reasonable annual charge for sending notices based on the estimated cost of providing the service.

(2) The notice required by paragraph (1) of this subdivision shall include, but not be limited to, the following:

(A) The amount or rate of the tax. If the tax is proposed to be increased from any previous year, the joint notice shall separately state both the existing tax rate and the proposed tax rate increase.

(B) The activity to be taxed.

(C) The estimated amount of revenue to be raised by the tax annually.

(D) The method and frequency for collecting the tax.

(E) The dates, times, and locations of the public meeting and hearing described in subdivision (a).

(F) The phone number and address of an individual, office, or organization that interested persons may contact to receive additional information about the tax.

(c) **(1)** The joint notice of both the public meeting and the public hearing required by subdivision (a) with respect to a proposal for a new or increased assessment on real property shall be accomplished through a mailing, postage prepaid, in the United States mail and shall be deemed given when so deposited. The public meeting pursuant to subdivision (a) shall take place no earlier than 10 days after the joint mailing pursuant to this subdivision. The public hearing shall take place no earlier than seven days after the public meeting pursuant to this subdivision. The envelope or the cover of the mailing shall include the name of the local agency and the return address of the sender. This mailed notice shall be in at least 10-point type and

shall be given to all property owners proposed to be subject to the new or increased assessment by a mailing by name to those persons whose names and addresses appear on the last equalized county assessment roll or the State Board of Equalization assessment roll, as the case may be.

(2) The joint notice required by paragraph (1) of this subdivision shall include, but not be limited to, the following:

(A) The estimated amount of the assessment per parcel. If the assessment is proposed to be increased from any previous year, the joint notice shall separately state both the amount of the existing assessment and the proposed assessment increase.

(B) A general description of the purpose or improvements that the assessment will fund.

(C) The address to which property owners may mail a protest against the assessment.

(D) The phone number and address of an individual, office, or organization that interested persons may contact to receive additional information about the assessment.

(E) A statement that a majority protest will cause the assessment to be abandoned if the assessment act used to levy the assessment so provides. Notice shall also state the percentage of protests required to trigger an election, if applicable.

(F) The dates, times, and locations of the public meeting and hearing described in subdivision (a).

(G) A proposed assessment formula or range as described in subparagraph (D) of paragraph (1) of subdivision (a) if applicable and that is noticed pursuant to this section.

(3) Notwithstanding paragraph (1), in the case of an assessment that is proposed exclusively for operation and maintenance expenses imposed throughout the entire local agency, or exclusively for operation and maintenance assessments proposed to be levied on 50,000 parcels or more, notice may be provided pursuant to this subdivision or pursuant to paragraph (1) of subdivision (b) and shall include the estimated amount of the assessment of various types, amounts, or uses of property and the information required by subparagraphs (B) to (G), inclusive, of paragraph (2) of subdivision (c).

(4) Notwithstanding paragraph (1), in the case of an assessment proposed to be levied pursuant to Part 2 (commencing with Section 22500) of Division 2 of the Streets and Highways Code by a regional park district, regional park and open-space district, or regional open-space district formed pursuant to Article 3 (commencing with Section 5500) of Chapter 3 of Division 5 of, or pursuant to Division 26 (commencing with Section 35100) of, the Public Resources Code, notice may be provided pursuant to paragraph (1) of subdivision (b).

(d) The notice requirements imposed by this section shall be construed as additional to, and not to supersede, existing provisions of law, and shall be applied concurrently with the existing provisions so as to not delay or prolong the governmental decision making process.

(e) This section shall not apply to any new or increased general tax or any new or increased assessment that requires an election of either of the following:

(1) The property owners subject to the assessment.

(2) The voters within the local agency imposing the tax or assessment.

(f) Nothing in this section shall prohibit a local agency from holding a consolidated meeting or hearing at which the legislative body discusses multiple tax or assessment proposals.

(g) The local agency may recover the reasonable costs of public meetings, public hearings, and notice required by this section from the proceeds of the tax or assessment. The costs recovered for these purposes, whether

recovered pursuant to this subdivision or any other provision of law, shall not exceed the reasonable costs of the public meetings, public hearings, and notice.

(h) Any new or increased assessment that is subject to the notice and hearing provisions of Article XIIIC or XIIID of the California Constitution is not subject to the notice and hearing requirements of this section.

(Amended by Stats.1997, c. 38 (S.B.919), §6, eff. July 1, 1997.)

§54955 Adjournment; adjourned meetings

The legislative body of a local agency may adjourn any regular, adjourned regular, special or adjourned special meeting to a time and place specified in the order of adjournment. Less than a quorum may so adjourn from time to time. If all members are absent from any regular or adjourned regular meeting the clerk or secretary of the legislative body may declare the meeting adjourned to a stated time and place and he shall cause a written notice of the adjournment to be given in the same manner as provided in Section 54956 for special meetings, unless such notice is waived as provided for special meetings. A copy of the order or notice of adjournment shall be conspicuously posted on or near the door of the place where the regular, adjourned regular, special or adjourned special meeting was held within 24 hours after the time of the adjournment. When a regular or adjourned regular meeting is adjourned as provided in this section, the resulting adjourned regular meeting is a regular meeting for all purposes. When an order of adjournment of any meeting fails to state the hour at which the adjourned meeting is to be held, it shall be held at the hour specified for regular meetings by ordinance, resolution, bylaw, or other rule.

(Added by Stats.1953, c. 1588, p. 3270, §1. Amended by Stats.1955, c. 760, p. 1254, §1; Stats.1959, c. 647, p. 2626, §1.)

§54955.1 Continuance

Any hearing being held, or noticed or ordered to be held, by a legislative body of a local agency at any meeting may by order or notice of continuance be continued or recontinued to any subsequent meeting of the legislative body in the same manner and to the same extent set forth in Section 54955 for the adjournment of meetings; provided, that if the hearing is continued to a time less than 24 hours after the time specified in the order or notice of hearing, a copy of the order or notice of continuance of hearing shall be posted immediately following the meeting at which the order or declaration of continuance was adopted or made.

(Added by Stats.1965, c. 469, p. 1775, §1.)

§54956 Special meetings; call; notice

A special meeting may be called at any time by the presiding officer of the legislative body of a local agency, or by a majority of the members of the legislative body, by delivering written notice to each member of the legislative body and to each local newspaper of general circulation and radio or television station requesting notice in writing. The notice shall be delivered personally or by any other means and shall be received at least 24 hours before the time of the meeting as specified in the notice. The call and notice shall specify the time and place of the special meeting and the business to be transacted or discussed. No other business shall be considered at these meetings by the legislative body. The written notice may be dispensed with as to any member who at or prior to the time the meeting convenes files with the clerk or secretary of the legislative body a written waiver of notice. The waiver may be given by telegram. The written notice may also be dispensed with as to any member who is actually present at the meeting at the time it convenes.

The call and notice shall be posted at least 24 hours prior to the special meeting in a location that is freely accessible to members of the public.

(Amended by Stats. 1997, c. 253 (S.B.46/), §6.)

§54956.5 Emergency meetings in emergency situations

In the case of an emergency situation involving matters upon which prompt action is necessary due to the disruption or threatened disruption of public facilities, a legislative body may hold an emergency meeting without complying with either the 24-hour notice requirement or the 24-hour posting requirement of Section 54956 or both of the notice and posting requirements.

For purposes of this section, "emergency situation" means any of the following:

(a) Work stoppage or other activity which severely impairs public health, safety, or both, as determined by a majority of the members of the legislative body.

(b) Crippling disaster which severely impairs public health, safety, or both, as determined by a majority of the members of the legislative body.

However, each local newspaper of general circulation and radio or television station which has requested notice of special meetings pursuant to Section 54956 shall be notified by the presiding officer of the legislative body, or designee thereof, one hour prior to the emergency meeting by telephone and all telephone numbers provided in the most recent request of such newspaper or station for notification of special meetings shall be exhausted. In the event that telephone services are not functioning, the notice requirements of this section shall be deemed waived, and the legislative body, or designee of the legislative body, shall notify those newspapers, radio stations, or television stations of the fact of the holding of the emergency meeting, the purpose of the meeting, and any action taken at the meeting as soon after the meeting as possible.

Notwithstanding Section 54957, the legislative body shall not meet in closed session during a meeting called pursuant to this section.

All special meeting requirements, as prescribed in Section 54956 shall be applicable to a meeting called pursuant to this section, with the exception of the 24-hour notice requirement.

The minutes of a meeting called pursuant to this section, a list of persons who the presiding officer of the legislative body, or designee of the legislative body, notified or attempted to notify, a copy of the rollcall vote, and any actions taken at the meeting shall be posted for a minimum of 10 days in a public place as soon after the meeting as possible.

(Added by Stats.1979, c. 223, p. 476, §1. Amended by Stats.1981, c. 968, §30; Stats.1986, c. 641, §8.)

§54956.6 Fees

No fees may be charged by the legislative body of a local agency for carrying out any provision of this chapter, except as specifically authorized by this chapter.

(Added by Stats.1980, c. 1284, p. 4342, §20.)

§54956.7 Closed sessions, license applications; rehabilitated criminals

Whenever a legislative body of a local agency determines that it is necessary to discuss and determine whether an applicant for a license or license renewal, who has a criminal record, is sufficiently rehabilitated to obtain the license, the legislative body may hold a closed session with the applicant and the applicant's attorney, if any, for the purpose of holding the discussion and making the determination. If the legislative body determines, as a result of the closed session, that the issuance or renewal of the license should be denied, the applicant shall be offered the opportunity to withdraw the application. If the applicant withdraws the application, no record shall be kept of the discussions or decisions made at the closed session and all matters relating to the closed session shall be confidential. If the applicant does not withdraw the application, the legislative body shall take action at the public meeting during which the closed session is held or at its next public meeting denying the application for the license but all matters relating to the closed session are confidential and shall not be disclosed without the consent of the applicant, except in an action by an applicant who has been denied a license challenging the denial of the license.

(Added by Stats.1982, c. 298, §1.)

§54956.8 Real property transactions; closed meeting with negotiator

Notwithstanding any other provision of this chapter, a legislative body of a local agency may hold a closed session with its negotiator prior to the purchase, sale, exchange, or lease of real property by or for the local agency to grant authority to its negotiator regarding the price and terms of payment for the purchase, sale, exchange, or lease.

However, prior to the closed session, the legislative body of the local agency shall hold an open and public session in which it identifies its negotiators, the real property or real properties which the negotiations may concern, and the person or persons with whom its negotiators may negotiate.

For purposes of this section, negotiators may be members of the legislative body of the local agency.

For purposes of this section, "lease" includes renewal or renegotiation of a lease.

Nothing in this section shall preclude a local agency from holding a closed session for discussions regarding eminent domain proceedings pursuant to Section 54956.9.

(Amended by Stats.1998, c. 260 (S.B.139), §3.)

§54956.86 Closed sessions; insurance pooling; tort liability losses; public liability losses; workers' compensation liability

Notwithstanding any other provision of this chapter, a legislative body of a local agency which provides services pursuant to Section 14087.3 of the Welfare and Institutions Code may hold a closed session to hear a charge or complaint from a member enrolled in its health plan if the member does not wish to have his or her name, medical status, or other information that is protected by federal law publicly disclosed. Prior to holding a closed session pursuant to this section, the legislative body shall inform the member, in writing, of his or her right to have the charge or complaint heard in an open session rather than a closed session.

(Added by Stats.1996, c. 182 (S.B.2092), §2.)

§54957 Closes sessions; personnel matters; exclusion of witnesses

Nothing contained in this chapter shall be construed to prevent the legislative body of a local agency from holding closed sessions with the Attorney General, district attorney, sheriff, or chief of police, or their respective deputies, on matters posing a threat to the security of public buildings or a threat to the public's right of access to public services or public facilities, or from holding closed sessions during a regular or special meeting to consider the appointment, employment, evaluation of performance, discipline, or dismissal of a public employee or to hear complaints or charges brought against the employee by another person or employee unless the employee requests a public session.

As a condition to holding a closed session on specific complaints or charges brought against an employee by another person or employee, the employee shall be given written notice of his or her right to have the complaints or charges heard in an open session rather than a closed session, which notice shall be delivered to the employee personally or by mail at least 24 hours before the time for holding the session. If notice is not given, any disciplinary or other action taken by the legislative body against the employee based on the specific complaints or charges in the closed session shall be null and void.

The legislative body also may exclude from the public or closed meeting, during the examination of a witness, any or all other witnesses in the matter being investigated by the legislative body.

For the purposes of this section, the term "employee" shall include an officer or an independent contractor who functions as an officer or an employee but shall not include any elected official, member of a legislative body or other independent contractors. Nothing in this section shall limit local officials' ability to hold closed session meetings pursuant to Sections 1461, 32106, and 32155 of the Health and Safety Code or Sections 37606 and 37624.3 of the Government Code. Closed sessions held pursuant to this section shall not include discussion or action on proposed compensation except for a reduction of compensation that results from the imposition of discipline.

(Added by Stats.1953, c. 1588, p> 3271, §1. Amended by Stats.1957, c. 1314, p. 2633, §1; Stats.1959, c. 647, p. 2626, §2; Stats.1961, c. 1671, p. 3637, §4; Stats.1971, c. 587, p. 1180, §1; Stats.1975, c. 959, p. 2241, §8; Stats.1980, c. 1284, p. 4342, §21; Stats.1982, c. 298, §2; Stats.1993, c. 1136 (A.B.1426) §12, operative April 1, 1994; Stats.1993, c. 1137 (S.B.36), §12, operative April 1, 1994; Stats.1994; Stats.1994. c. 32 (S.B.752), §14 eff. March 30 1994, operative April 1, 1994.)

§54957.1 Closed sessions; public report of action taken

(a) The legislative body of any local agency shall publicly report any action taken in closed session and the vote or abstention of every member present thereon, as follows:

(1) Approval of an agreement concluding real estate negotiations pursuant to Section 54956.8 shall be reported after the agreement is final, as specified below:

(A) If its own approval renders the agreement final, the body shall report that approval and the substance of the agreement in open session at the public meeting during which the closed session is held.

(B) If final approval rests with the other party to the negotiations, the local agency shall disclose the fact of that approval and the substance of the agreement upon inquiry by any person, as soon as the other party or its agent has informed the local agency of its approval.

(2) Approval given to its legal counsel to defend, or seek or refrain from seeking appellate review or relief, or to enter as an amicus curiae in any form of litigation as the result of a consultation under Section 54956.9 shall be reported in open session at the public meeting during which the closed session is held. The report shall identify, if known, the adverse party or parties and the substance of the litigation. In the case of approval given to initiate or intervene in an action, the announcement need not identify the action, the defendants, or other particulars, but shall specify that the direction to initiate or intervene in an action has been given and that the action, the defendants, and the other particulars shall, once formally commenced, be disclosed to any person upon inquiry, unless to do so would jeopardize the agency's ability to effectuate service of process on one or more unserved parties, or that to do so would jeopardize its ability to conclude existing settlement negotiations to its advantage.

(3) Approval given to its legal counsel of a settlement of pending litigation, as defined in Section 54956.9, at any stage prior to or during a judicial or quasi-judicial proceeding shall be reported after the settlement is final, as specified below:

(A) If the legislative body accepts a settlement offer signed by the opposing party, the body shall report its acceptance and identify the substance of the agreement in open session at the public meeting during which the closed session is held.

(B) If final approval rests with some other party to the litigation or with the court, then as soon as the settlement becomes final, and upon inquiry by any person, the local agency shall disclose the fact of that approval, and identify the substance of the agreement.

(4) Disposition reached as to claims discussed in closed session pursuant to Section 54956.95 shall be reported as soon as reached in a manner that identifies the name of the claimant, the name of the local agency claimed against, the substance of the claim, and any monetary amount approved for payment and agreed upon by the claimant.

(5) Action taken to appoint, employ, dismiss, accept the resignation of, or otherwise affect the employment status of a public employee in closed session pursuant to Section 54957 shall be reported at the public meeting during which the closed session is held. Any report required by this paragraph shall identify the title of the position. The general requirement of this paragraph notwithstanding, the report of a dismissal or of the nonrenewal of an employment contract shall be deferred until the first public meeting following the exhaustion of administrative remedies, if any.

(6) Approval of an agreement concluding labor negotiations with represented employees pursuant to Section 54957.6 shall be reported after the agreement is final and has been accepted or ratified by the other party. The report shall identify the item approved and the other party or parties to the negotiation.

(b) Reports that are required to be made pursuant to this section may be made orally or in writing. The legislative body shall provide to any person who has submitted a written request to the legislative body within 24 hours of the posting of the agenda, or to any person who has made a standing request for all documentation as

part of a request for notice of meetings pursuant to Section 54954.1 or 54956, if the requester is present at the time the closed session ends, copies of any contracts, settlement agreements, or other documents that were finally approved or adopted in the closed session. If the action taken results in one or more substantive amendments to the related documents requiring retyping, the documents need not be released until the retyping is completed during normal business hours, provided that the presiding officer of the legislative body or his or her designee orally summarizes the substance of the amendments for the benefit of the document requester or any other person present and requesting the information.

(c) The documentation referred to in paragraph (b) shall be available to any person on the next business day following the meeting in which the action referred to is taken or, in the case of substantial amendments, when any necessary retyping is complete.

(d) Nothing in this section shall be construed to require that the legislative body approve actions not otherwise subject to legislative body approval.

(e) No action for injury to a reputational, liberty, or other personal interest may be commenced by or on behalf of any employee or former employee with respect to whom a disclosure is made by a legislative body in an effort to comply with this section.

(Added by Stats.1975, c. 959, p. 2242, §9. Amended by Stats.1977, c. 89, p. 506, §1; Stats.1980, c. 181, p. 402, §1; Stats.1980, c. 1284, p. 4343, §22; Stats.1993, c. 1136 (A.B.1426), §13, operative April 1, 1994; Stats.1993, c. 1137 (S.B.36), §13, operative April 1, 1994; Stats.1994, c. 32 (S.B.752), §15, eff. March 30, 1994, operative April 1, 1994.)

§54957.2 Minute book record of closed sessions; inspection

(a) The legislative body of a local agency may, by ordinance or resolution, designate a clerk or other officer or employee of the local agency who shall then attend each closed session of the legislative body and keep and enter in a minute book a record of topics discussed and decisions made at the meeting. The minute book made pursuant to this section is not a public record subject to inspection pursuant to the California Public Records Act (Chapter 3.5 (commencing with Section 6250) of Division 7 of Title 1), and shall be kept confidential. The minute book shall be available only to members of the legislative body or, if a violation of this chapter is alleged to have occurred at a closed session, to a court of general jurisdiction wherein the local agency lies. Such minute book may, but need not, consist of a recording of the closed session.

(b) An elected legislative body of a local agency may require that each legislative body all or a majority of whose members are appointed by or under the authority of the elected legislative body keep a minute book as prescribed under subdivision (a).

(Added by Stats.1976, c. 1363, p. 6207, §1. Amended by Stats.1980, c. 1284, p. 4343, §23; Stats.1981, c. 968, §31.)

§54957.5 Agendas and other writings distributed for discussion or consideration at public meetings; public records; inspection; closed sessions

(a) Notwithstanding Section 6255 or any other provisions of law, agendas of public meetings and any other writings, when distributed to all, or a majority of all, of the members of a legislative body of a local agency by any person in connection with a matter subject to discussion or consideration at a public meeting of the body, are disclosable public records under the California Public Records Act (Chapter 3.5 (commencing with Section 6250) of Division 7 of Title 1), and shall be made available upon request without delay. However, this section shall not include any writing exempt from public disclosure under Section 6253.5, 6254, 6254.7, or 6254.22.

(b) Writings that are public records under subdivision (a) and that are distributed during a public meeting shall be made available for public inspection at the meeting if prepared by the local agency or a member of its legislative body, or after the meeting if prepared by some other person.

(c) Nothing in this chapter shall be construed to prevent the legislative body of a local agency from charging a fee or deposit for a copy of a public record pursuant to Section 6257.

(d) This section shall not be construed to limit or delay the public's right to inspect or obtain a copy of any record required to be disclosed under the requirements of the California Public Records Act (Chapter 3.5 (commencing

with Section 6250) of Division 7 of Title 1). Nothing in this chapter shall be construed to require a legislative body of a local agency to place any paid advertisement or any other paid notice in any publication.

(Amended by Stats.1998, c. 260 (S.B.139), §4; Stats.1999, c. 769 (A.B.496), §3.)

§54957.6 Closed sessions; salaries, salary schedules or fringe benefits

(a) Notwithstanding any other provision of law, a legislative body of a local agency may hold closed sessions with the local agency's designated representatives regarding the salaries, salary schedules, or compensation paid in the form of fringe benefits of its represented and unrepresented employees, and, for represented employees, any other matter within the statutorily provided scope of representation.

However, prior to the closed session, the legislative body of the local agency shall hold an open and public session in which it identifies its designated representatives.

Closed sessions of a legislative body of a local agency, as permitted in this section, shall be for the purpose of reviewing its position and instructing the local agency's designated representatives.

Closed sessions, as permitted in this section, may take place prior to and during consultations and discussions with representatives of employee organizations and unrepresented employees.

Closed sessions with the local agency's designated representative regarding the salaries, salary schedules, or compensation paid in the form of fringe benefits may include discussion of an agency's available funds and funding priorities, but only insofar as these discussions relate to providing instructions to the local agency's designated representative.

Closed sessions held pursuant to this section shall not include final action on the proposed compensation of one or more unrepresented employees.

For the purposes enumerated in this section, a legislative body of a local agency may also meet with a state conciliator who has intervened in the proceedings.

(b) For the purposes of this section, the term "employee" shall include an officer or an independent contractor who functions as an officer or an employee, but shall not include any elected official, member of a legislative body, or other independent contractors.

(Amended by Stats.1998, c. 260 (S.B.139), §5.)

§54957.7 Disclosure of items to be discussed in closed sessions

(a) Prior to holding any closed session, the legislative body of the local agency shall disclose, in an open meeting, the item or items to be discussed in the closed session. The disclosure may take the form of a reference to the item or items as they are listed by number or letter on the agenda. In the closed session, the legislative body may consider only those matters covered in its statement. Nothing in this section shall require or authorize a disclosure of information prohibited by state or federal law.

(b) After any closed session, the legislative body shall reconvene into open session prior to adjournment and shall make any disclosures required by Section 54957.1 of action taken in the closed session.

(c) The announcements required to be made in open session pursuant to this section may be made at the location announced in the agenda for the closed session, as long as the public is allowed to be present at that location for the purpose of hearing the announcements.

(Added by Stats.1980, c. 1284, p. 4344, §26. Amended by Stats.1981, c. 968, §33; Stats.1993, c. 1136 (A.B.1426), §15, operative April 1, 1994; Stats.1993, c. 1137 (S.B.36), §15, operative April 1, 1994.)

§54957.8 Closed sessions; legislative body of a multijurisdictional drug law enforcement agency

Nothing contained in this chapter shall be construed to prevent the legislative body of a multijurisdictional drug law enforcement agency, or an advisory body of a multijurisdictional drug law enforcement agency, from holding closed sessions to discuss the case records of any ongoing criminal investigation of the multijurisdictional drug

law enforcement agency or of any party to the joint powers agreement, to hear testimony from persons involved in the investigation, and to discuss courses of action in particular cases.

"Multijurisdictional drug law enforcement agency," for purposes of this section, means a joint powers entity formed pursuant to Article 1 (commencing with Section 6500) of Chapter 5 of Division 7 of Title 1, which provides drug law enforcement services for the parties to the joint powers agreement.

The Legislature finds and declares that this section is within the public interest, in that its provisions are necessary to prevent the impairment of ongoing law enforcement investigations, to protect witnesses and informants, and to permit the discussion of effective courses of action in particular cases.

(Added by Stats.1988, c. 55, §1.)

§54957.9 Disorderly conduct of general public during meeting; clearing of room

In the event that any meeting is willfully interrupted by a group or groups of persons so as to render the orderly conduct of such meeting unfeasible and order cannot be restored by the removal of individuals who are willfully interrupting the meeting, the members of the legislative body conducting the meeting may order the meeting room cleared and continue in session. Only matters appearing on the agenda may be considered in such a session. Representatives of the press or other news media, except those participating in the disturbance, shall be allowed to attend any session held pursuant to this section. Nothing in this section shall prohibit the legislative body from establishing a procedure for readmitting an individual or individuals not responsible for willfully disturbing the orderly conduct of the meeting.

(Added by Stats. 1970, c. 1610, p. 3386, §2. Amended by Stats, 1981, c. 968, §34.)

§54958 Application of chapter

The provisions of this chapter shall apply to the legislative body of every local agency notwithstanding the conflicting provisions of any other state law.

(Added by Stats. 1953, c. 1558, p. 3271, §1.)

§54959 Penalty for unlawful meeting

Each member of a legislative body who attends a meeting of that legislative body where action is taken in violation of any provision of this chapter, and where the member intends to deprive the public of information to which the member knows or has reason to know the public is entitled under this chapter, is guilty of a misdemeanor.

(Added by Stats.1961, c. 1671, p. 3638, §5. Amended by Stats.1993, c. 1136 (A.B.1426), §16, operative April 1, 1994; Stats.1993, c.1137 (S.B.36), §16, operative April 1, 1994; Stats.1994, c. 32 (S.B.752), §18, eff. March 30, 1994, operative April 1, 1994.)

§54960 Actions to stop or prevent violations of meeting provisions; applicability of meeting provisions; validity of rules or actions on recording closed sessions

(a) The district attorney or any interested person may commence an action by mandamus, injunction or declaratory relief for the purpose of stopping or preventing violations or threatened violations of this chapter by members of the legislative body of a local agency or to determine the applicability of this chapter to actions or threatened future action of the legislative body, or to determine whether any rule or action by the legislative body to penalize or otherwise discourage the expression of one or more of its members is valid or invalid under the laws of this state or of the United States, or to compel the legislative body to tape record its closed sessions as hereinafter provided.

(b) The court in its discretion may, upon a judgment of a violation of Section 54956.7, 54956.8, 54956.9, 54956.95, 54957, or 54957.6, order the legislative body to tape record its closed sessions and preserve the tape recordings for the period and under the terms of security and confidentiality the court deems appropriate.

(c) **(1)** Each recording so kept shall be immediately labeled with the date of the closed session recorded and the title of the clerk or other officer who shall be custodian of the recording.

(2) The tapes shall be subject to the following discovery procedures:

(A) In any case in which discovery or disclosure of the tape is sought by either the district attorney or the plaintiff in a civil action pursuant to Section 54959, 54960, or 54960.1 alleging that a violation of this chapter has occurred in a closed session which has been recorded pursuant to this section, the party seeking discovery or disclosure shall file a written notice of motion with the appropriate court with notice to the governmental agency which has custody and control of the tape recording. The notice shall be given pursuant to subdivision (b) of Section 1005 of the Code of Civil Procedure.

(B) The notice shall include, in addition to the items required by Section 1010 of the Code of Civil Procedure, all of the following:

(i) Identification of the proceeding in which discovery or disclosure is sought, the party seeking discovery or disclosure, the date and time of the meeting recorded, and the governmental agency which has custody and control of the recording.

(ii) An affidavit which contains specific facts indicating that a violation of the act occurred in the closed session.

(3) If the court, following a review of the motion, finds that there is good cause to believe that a violation has occurred, the court may review, in camera, the recording of that portion of the closed session alleged to have violated the act.

(4) If, following the in camera review, the court concludes that disclosure of a portion of the recording would be likely to materially assist in the resolution of the litigation alleging violation of this chapter, the court shall, in its discretion, make a certified transcript of the portion of the recording a public exhibit in the proceeding.

(5) Nothing in this section shall permit discovery of communications which are protected by the attorney-client privilege.

(Added by Stats.1961, c. 1671, p. 3638, §6. Amended by Stats.1969, c. 494, p. 1106, §2; Stats.1993, c. 1136 (A.B.1426), §17, operative April 1, 1994; Stats.1993, c. 1137 (S.B.36), §17, operative April 1, 1994; Stats.1994, c. 32 (S.B.752), §19, eff. March 30, 1994, operative April 1, 1994.)

§54960.1 Unlawful action by legislative body; action for mandamus or injunction; prerequisites

(a) The district attorney or any interested person may commence an action by mandamus or injunction for the purpose of obtaining a judicial determination that an action taken by a legislative body of a local agency in violation of Section 54953, 54954.2, 54954.5, 54954.6, or 54956 is null and void under this section. Nothing in this chapter shall be construed to prevent a legislative body from curing or correcting an action challenged pursuant to this section.

(b) Prior to any action being commenced pursuant to subdivision (a), the district attorney or interested person shall make a demand of the legislative body to cure or correct the action alleged to have been taken in violation of Section 54953, 54954.2, 54954.5, 54954.6, or 54956. The demand shall be in writing and clearly describe the challenged action of the legislative body and nature of the alleged violation.

(c) **(1)** The written demand shall be made within 90 days from the date the action was taken unless the action was taken in an open session but in violation of Section 54954.2, in which case the written demand shall be made within 30 days from the date the action was taken.

(2) Within 30 days of receipt of the demand, the legislative body shall cure or correct the challenged action and inform the demanding party in writing of its actions to cure or correct or inform the demanding party in writing of its decision not to cure or correct the challenged action.

(3) If the legislative body takes no action within the 30-day period, the inaction shall be deemed a decision not to cure or correct the challenged action, and the 15-day period to commence the action described in subdivision (a) shall commence to run the day after the 30-day period to cure or correct expires.

(4) Within 15 days of receipt of the written notice of the legislative body's decision to cure or correct, or not to cure or correct, or within 15 days of the expiration of the 30-day period to cure or correct, whichever is earlier, the demanding party shall be required to commence the action pursuant to subdivision (a) or thereafter be barred from commencing the action.

(d) An action taken that is alleged to have been taken in violation of Section 54953, 54954.2, 54954.5, 54954.6, or 54956 shall not be determined to be null and void if any of the following conditions exist:

(1) The action taken was in substantial compliance with Sections 54953, 54954.2, 54954.5, 54954.6, and 54956.

(2) The action taken was in connection with the sale or issuance of notes, bonds, or other evidences of indebtedness or any contract, instrument, or agreement thereto.

(3) The action taken gave rise to a contractual obligation, including a contract let by competitive bid other than compensation for services in the form of salary or fees for professional services, upon which a party has, in good faith and without notice of a challenge to the validity of the action, detrimentally relied.

(4) The action taken was in connection with the collection of any tax.

(5) Any person, city, city and county, county, district, or any agency or subdivision of the state alleging noncompliance with subdivision (a) of Section 54954.2, Section 54956, or Section 54956.5, because of any defect, error, irregularity, or omission in the notice given pursuant to those provisions, had actual notice of the item of business at least 72 hours prior to the meeting at which the action was taken, if the meeting was noticed pursuant to Section 54954.2, or 24 hours prior to the meeting at which the action was taken if the meeting was noticed pursuant to Section 54956, or prior to the meeting at which the action was taken if the meeting is held pursuant to Section 54956.5.

(e) During any action seeking a judicial determination pursuant to subdivision (a) if the court determines, pursuant to a showing by the legislative body that an action alleged to have been taken in violation of Section 54953, 54954.2, 54954.5, 54954.6, or 54956 has been cured or corrected by a subsequent action of the legislative body, the action filed pursuant to subdivision (a) shall be dismissed with prejudice.

(f) The fact that a legislative body takes a subsequent action to cure or correct an action taken pursuant to this section shall not be construed or admissible as evidence of a violation of this chapter.

(Added by Stats.1986, c. 641, §9. Amended by Stats.1987, c. 1327, §2; Stats.1992, c. 1234 (S.B.1977), §3; Stats.1993, c. 1136 (A.B.1426), §18, operative April, 1994; Stats.1993, c. 1137 (S.B.36), §18, operative April 1, 1994; Stats.1994, c. 32 (S.B.752), §20, eff. March 30, 1994, operative April 1, 1994.)

§54960.5 Costs and attorney fees

A court may award court costs and reasonable attorney fees to the plaintiff in an action brought pursuant to Section 54960 or 54960.1 where it is found that a legislative body of the local agency has violated this chapter. The costs and fees shall be paid by the local agency and shall not become a personal liability of any public officer or employee of the local agency.

A court may award court costs and reasonable attorney fees to a defendant in any action brought pursuant to Section 54960 or 54960.1 where the defendant has prevailed in a final determination of such action and the court finds that the action was clearly frivolous and totally lacking in merit.

(Added by Stats.1975, c. 959, p. 2242, §10. Amended by Stats.1981, c. 968, §35; Stast.1986, c. 641, §10.)

§54961 Meetings prohibited in facilities; grounds; identity of victims of tortuous sexual conduct or child abuse

(a) No legislative body of a local agency shall conduct any meeting in any facility the prohibits the admittance of any person, or persons, on the basis of race, religious creed, color, national origin, ancestry, or sex, or which is inaccessible to disabled persons, or where members of the public may not be present without making a payment or purchase. This section shall apply to every local agency as defined in Section 54951.

(b) No notice, agenda, announcement, or report required under this chapter need identify any victim or alleged victim of tortuous sexual conduct or child abuse unless the identity of the person has been publicly disclosed.

(Added by Stats.1970, c. 383, p. 798, §2. Amended by Stats.1981, c. 968, §36; Stats.1993, c. 1136 (A.B.1426), §19, operative April 1, 1994; Stats.1993, c. 1137 (S.B.36), §19, operative April 1, 1994; Stats.1993, c. 1138 (S.B.1140), §9, operative April 1, 1994; Stats.1994, c. 32 (S.B.752), §21, eff. March 30, 1994, operative April 1, 1994.)

§54962 Closed session by legislative body prohibited

Except as expressly authorized by this chapter, or by Sections 1461, 1462, 32106, and 32155 of the Health and Safety Code or Sections 37606 and 37624.3 of the Government Code as they apply to hospitals, or by any provision of the Education Code pertaining to school districts and community college districts, no closed session may be held by any legislative body of any local agency.

(Added by Stats. 1987, c. 1320, §6. Amended by Stats.1988, c. 1346, §1, eff. Sept. 26, 1988; Stats. 1993, c. 1136 (A.B. 1426), §20, operative April 1, 1994; Stats. 1993, c 1137 (S.B.36), §20, operative April 1, 1994; Stats. 1993, c. 1138 (S.B. 1140), §10, operative April 1, 1994; Stats. 1994, c. 32 (S.B. 752), §22, eff. March 30 1994, operative April 1, 1994; Stats. 1995, c. 529 (S.B. 614), §6, eff. Oct. 4, 1995.)

§11120 Public policy; legislative finding and declaration; citation of article

It is the public policy of this state that public agencies exist to aid in the conduct of the people's business and the proceedings of public agencies be conducted openly so that the public may remain informed.

In enacting this article the Legislature finds and declares that it is the intent of the law that actions of state agencies be taken openly and that their deliberation be conducted openly.

The people of this state do not yield their sovereignty to the agencies which serve them. The people, in delegating authority, do not give their public servants the right to decide what is good for the people to know and what is not good for them to know. The people insist on remaining informed so that they may retain control over the instruments they have created.

This article shall be known and may be cited as the Bagley-Keene Open Meeting Act.

(Added by Stats.1967, c.1656, p.4026, §122. Amended by Stats. 1980, c. 1284, p. 4333, §4; Stats.1981, c.968, p.3683, §4.)

§11121 State body defined

As used in this article, "state body," means each of the following:

(a) Every state board, or commission, or similar multimember body of the state that is created by statute or required by law to conduct official meetings and every commission created by executive order.

(b) Any board, commission, committee, or similar multimember body that exercises any authority of a state body delegated to it by that state body.

(c) Any advisory board, advisory commission, advisory committee, advisory subcommittee, or similar multimember advisory body of a state body, if created by formal action of the state body or of any member of the state body, and if the advisory body so created consists of three or more persons.

(d) Any board, commission, committee, or similar multimember body on which a member of a body that is a state body pursuant to this section serves in his or her official capacity as a representative of that state body and which that is supported, in whole or in part, by funds provided by the state body, whether the multimember body is organized and operated by the state body or by a private corporation.

(Amended by Stats. 1996, c. 1023(S.B. 1497), §88, eff. Sept. 29, 1996; Stats. 1996, c. 1064 (A.B. 3351), §783.1, operative July 1, 1997; Stats. 2001, c. 243(A.B. 192), §1.)

§11121.1 State body; exclusions
As used in this article, "state body" does not include any of the following:

(a) State agencies provided for in Article VI of the California Constitution.

(b) Districts or other local agencies whose meetings are required to be open to the public pursuant to the Ralph M. Brown Act (Chapter 9 (commencing with Section 54950) of Part 1 of Division 2 of Title 5).

(c) State agencies provided for in Article IV of the California Constitution whose meetings are required to be open to the public pursuant to the Grunsky-Burton Open Meeting Act (Article 2.2 (commencing with Section 9027) of Chapter 1.5 of Part 1 of Division 2 of Title 2).

(d) State agencies when they are conducting proceedings pursuant to Section 3596.

(e) State agencies provided for in Section 109260 of the Health and Safety Code, except as provided in Section 109390 of the Health and Safety Code.

(f) State agencies provided for in Section 11770.5 of the Insurance Code.

(g) The Credit Union Advisory Committee established pursuant to Section 14380 of the Financial Code.

(Added by Stats. 2001, c. 243 (A.B. 192), §2.)

§11121.2 Repealed by Stats. 2001, c. 243 (A.B. 192), §3

§11121.7 Repealed by Stats.2001, c. 243(A.B. 192), §4

§11121.8 Repealed by Stats.2001, c. 243 (A.B. 192), §5

§11121.9 Provision of copy of article to members of state body
Each state body shall provide a copy of this article to each member of the state body upon his or her appointment to membership or assumption of office.

(Added by Stats. 1980, c. 1284, p. 4334, §6. Amended by Stats. 1981, c. 714, p. 2659, §175; Stats. 1981, c. 968, p. 3685, §7.1.)

§11121.95 Appointees or elected officials not yet in office; conformity of conduct to article requirements
Any person appointed or elected to serve as a member of a state body who has not yet assumed the duties of office shall conform his or her conduct to the requirements of this article and shall be treated for purposes of this article as if he or she has already assumed office.

(Added by Stats. 1997, c. 949(S.B. 95), §1.)

§11122 Action taken
As used in this article "action taken" means a collective decision made by the members of a state body, a collective commitment or promise by the members of the state body to make a positive or negative decision or an actual vote by the members of a state body when sitting as a body or entity upon a motion, proposal, resolution, order or similar action.

(Added by Stats. 1967, c. 1656, p. 4026, §122. Amended by Stats. 1981, c. 968, p. 3685, §7.3)

§11122.5 Meeting denied: Collective concurrence prohibited; exceptions
(a) As used in this article, "meeting" includes any congregation of a majority of the members of a state body at the same time and place to hear, discuss, or deliberate upon any item that is within the subject matter jurisdiction of the state body to which it pertains.

(b) Except as authorized pursuant to Section 11123, any use of direct communication, personal intermediaries, or technological devices that is employed by a majority of the members of the state body to develop a collective concurrence as to action to be taken on an item by the members of the state body is prohibited.

(c) The prohibitions of this article do not apply to any of the following:

(1) Individual contacts or conversations between a member of a state body and any other person.

(2) The attendance of a majority of the members of a state body at a conference or similar gathering open to the public that involves a discussion of issues of general interest to the public or to public agencies of the type represented by the state body, provided that a majority of the members do not discuss among themselves, other than as part of the scheduled program, business of a specified nature that is within the subject matter jurisdiction of the state body. This paragraph is not intended to allow members of the public free admission to a conference or similar gathering at which the organizers have required other participants or registrants to pay fees or charges as a condition of attendance.

(3) The attendance of a majority of the members of a state body at an open and publicized meeting organized to address a topic of state concern by a person or organization other than the state body, provided that a majority of the members do not discuss among themselves, other than as part of the scheduled program, business of a specific nature that is within the subject matter jurisdiction of the state body.

(4) The attendance of a majority of the members of a state body at an open and noticed meeting of another state body or of a legislative body of a local agency as defined by Section 54951, provided that a majority of the members do not discuss among themselves, other than as part of the scheduled meeting, business of a specific nature that is within the subject matter jurisdiction of the other state body.

(5) The attendance of a majority of the members of a state body at a purely social or ceremonial occasion, provided that a majority of the members do not discuss among themselves business of a specific nature that is within the subject matter jurisdiction of the state body.

(6) The attendance of a majority of the members of a state body at an open and noticed meeting of a standing committee of that body, provided that the members of the state body who are not members of the standing committee attend only as observers.

(Added by Stats. 2001, c. 243 (A.B. 192), §6.)

§11123 Meetings; attendance; teleconference option

(a) All meetings of a state body shall be open and public and all persons shall be permitted to attend any meeting of a state body except as otherwise provided in this article.

(b) **(1)** This article does not prohibit a state body from holding an open or closed meeting by teleconference for the benefit of the public and state body. The meeting or proceeding held by teleconference shall otherwise comply with all applicable requirements or laws relating to a specific type of meeting or proceeding, including the following:

(A) The teleconferencing meeting shall comply with all requirements of this article applicable to other meetings.

(B) The portion of the teleconferenced meeting that is required to be open to the public shall be audible to the public at the location specified in the notice of the meeting.

(C) If the state body elects to conduct a meeting or proceeding by teleconference, it shall post agendas at all teleconference locations and conduct teleconference meetings in a manner that protects the rights of any party or member of the public appearing before the state body. Each teleconference location shall be identified in the notice and agenda of the meeting or proceeding, and each teleconference location shall be accessible to the public. The agenda shall provide an opportunity for

members of the public to address the state body directly pursuant to Section 11125.7 at each teleconference location.

(D) All votes taken during a teleconferenced meeting shall be by roll call.

(E) The portion of the teleconferenced meeting that is closed to the public may not include the consideration of any agenda item being heard pursuant to Section 11125.5.

(F) At least one member of the state body shall be physically present at the location specified in the notice of the meeting.

(2) For the purposes of this subdivision, "teleconference" means a meeting of a state body, the members of which are at different locations, connected by electronic means, through either audio or both audio and video. This section does not prohibit a state body from providing members of the public with additional locations in which the public may observe or address the state body by electronic means, through either audio or both audio and video.

(Amended by Stats. 1994, c. 1153 (A.B. 3467) §1; Stats. 1997, c. 52 (A.B. 1097) §1; Stats. 2001, c. 243 (A.B. 192), §7.)

§11124 Conditions to attendance

No person shall be required, as a condition to attendance at a meeting of a state body, to register his or her name, to provide other information, to complete a questionnaire, or otherwise to fulfill any condition precedent to his or her attendance.

If an attendance list, register, questionnaire, or other similar document is posted at or near the entrance to the room where the meeting is to be held, or is circulated to persons present during the meeting, it shall state clearly that the signing, registering, or completion of the document is voluntary, and that all persons may attend the meeting regardless of whether a person signs, registers, or completes the document.

(Added by Stats. 1967, c. 1656, p. 4026, §122. Amended by Stats. 1981, c. 968, p. 3685, §8.)

§11124.1 Tape recording of proceedings; inspection of state's recording; broadcast restrictions

(a) Any person attending an open and public meeting of the state body shall have the right to record the proceedings with an audio or video tape recorder or a still or motion picture camera in the absence of a reasonable finding by the state body that the recording cannot continue without noise, illumination, or obstruction of view that constitutes, or would constitute, a persistent disruption of the proceedings.

(b) Any tape or film record of an open and public meeting made for whatever purpose by or at the direction of the state body shall be subject to inspection pursuant to the California Public Records Act (Chapter 3.5 (commencing with Section 6250) of Division 7 of Title 1), but may be erased or destroyed 30 days after the taping or recording. Any inspection of an audio or video tape recording shall be provided without charge on an audio or video tape player made available by the state body.

(c) No state body shall prohibit or otherwise restrict the broadcast of its open and public meetings in the absence of a reasonable finding that the broadcast cannot be accomplished without noise, illumination, or obstruction of view that would constitute a persistent disruption of the proceedings.

(Amended by Stats.1997, c. 949 (S.B.95) §2.)

§11125 Notice of meeting

(a) The state body shall provide notice of its meeting to any person who requests that notice in writing. Notice shall be given and also made available on the Internet at least 10 days in advance of the meeting, and shall include the name, address, and telephone number of any person who can provide further information prior to the meeting, but need not include a list of witnesses expected to appear at the meeting. The written notice shall additionally include the address of the Internet site where notices required by this article are made available.

(b) The notice of a meeting of a body that is a state body shall include a specific agenda for the meeting, containing a brief description of the items of business to be transacted or discussed in either open or closed

session. A brief general description of an item generally need not exceed 20 words. A description of an item to be transacted or discussed in closed session shall include a citation of the specific statutory authority under which a closed session is being held. No item shall be added to the agenda subsequent to the provision of this notice, unless otherwise permitted by this article.

(c) Notice of a meeting of a state body that complies with this section shall also constitute notice of a meeting of an advisory body of that state body, provided that the business to be discussed by the advisory body is covered by the notice of the meeting of the state body, provided that the specific time and place of the advisory body's meeting is announced during the open and public state body's meeting, and provided that the advisory body's meeting is conducted within a reasonable time of, and nearby, the meeting of the state body.

(d) A person may request, and shall be provided, notice pursuant to subdivision (a) for all meetings of a state body or for a specific meeting or meetings. In addition, at the state body's discretion, a person may request, and may be provided, notice of only those meetings of a state body at which a particular subject or subjects specified in the request will be discussed.

(e) A request for notice of more than one meeting of a state body shall be subject to the provisions of Section 14911.

(Amended by Stats.1997, c. 949(S.B.95), §3; Stats. 1999, c. 3939A.B.1234), §1; Stats. 2001, c.243 (A.B. 192), §8.)

§11125.1 Agendas and other writings distributed for discussion or consideration at public meetings; public records; Franchise Tax Board; inspection; closed sessions

(a) Notwithstanding Section 6255 or any other provisions of law, agendas of public meetings and other writings, when distributed to all, or a majority of all, of the members of a state body by any person in connection with a matter subject to discussion or consideration at a public meeting of the body, are disclosable public records under the California Public Records Act (Chapter 3.5 (commencing with Section 6250) of Division 7 of Title 1), and shall be made available upon request without delay. However, this section shall not include any writing exempt from public disclosure under Section 6253.5, 6254, or 6254.7 of this code, or Section 489.1 or 583 of the Public Utilities Code.

(b) Writings that are public records under subdivision (a) and that are distributed to members of the state body prior to or during a meeting, pertaining to any item to be considered during the meeting, shall be made available for public inspection at the meeting if prepared by the state body or a member of the state body, or after the meeting if prepared by some other person.

(c) In the case of the Franchise Tax Board, prior to that state body taking final action on any item, writings pertaining to that item that are public records under subdivision (a) that are distributed to members of the state body by board staff or individual members prior to or during a meeting shall be: (1) made available for public inspection at that meeting, (2) distributed to all persons who request notice in writing pursuant to subdivision (a) of Section 11125, and (3) made available on the Internet.

(d) Nothing in this section shall be construed to prevent a state body from charging a fee or deposit for a copy of a public record pursuant to Section 6257. The writings described in subdivision (b) are subject to the requirements of the California Public Records Act (Chapter 3.5 (commencing with Section 6250) of Division 7 of Title 1), and shall not be construed to limit or delay the public's right to inspect any record required to be disclosed by that act, or to limit the public's right to inspect any record covered by that act. This section shall not be construed to be applicable to any writings solely because they are properly discussed in a closed session of a state body. Nothing in this article shall be construed to require a state body to place any paid advertisement or any other paid notice in any publication.

(d) "Writing" for purposes of this section means "writing" as defined under Section 6252.

(Amended by Stats.1997, c. 949 (S.B.95) §4; Stats.2001, c. 670 (S.B.445), §1.)

§11125.2 Appointment, employment or dismissal of public employees; closed sessions; public report
Any state body shall report publicly at a subsequent public meeting any action taken, and any roll call vote thereon, to appoint, employ, or dismiss a public employee arising out of any closed session of the state body.

(Added by Stats.1980, c. 1284, p. 4335, §9. Amended by Stats. 1981, c. 968, p. 3687, §10.3)

§11125.3 Action on items of business not appearing on agenda; notice
(a) Notwithstanding Section 11125, a state body may take action on items of business not appearing on the posted agenda under any of the conditions stated below:

(1) Upon a determination by a majority vote of the state body that an emergency situation exists, as defined in Section 11125.5.

(2) Upon a determination by a two-thirds vote of the state body, or, if less than two-thirds of the members are present, a unanimous vote of those members present, that there exists a need to take immediate action and that the need for action came to the attention of the state body subsequent to the agenda being posted as specified in Section 11125.

(b) Notice of the additional item to be considered shall be provided to each member of the state body and to all parties that have requested notice of its meetings as soon as is practicable after a determination of the need to consider the item is made, but shall be delivered in a manner that allows it to be received by the members and by newspapers of general circulation and radio or television stations at least 48 hours before the time of the meeting specified in the notice. Notice shall be made available to newspapers of general circulation and radio or television stations by providing that notice to all national press wire services. Notice shall also be made available on the Internet as soon as is practicable after the decision to consider additional items at a meeting has been made.

(Added by Stats. 1994, c. 1153 (A.B. 3467), §2. Amended by Stats. 2001, c. 243 (A.B. 192), §9.)

§11125.4 Special meetings; authorized purposes; notice; required finding of hardship or need to protect public interest
(a) A special meeting may be called at any time by the presiding officer of the state body or by a majority of the members of the state body. A special meeting may only be called for one of the following purposes where compliance with the 10-day notice provisions of Section 11125 would impose a substantial hardship on the state body or where immediate action is required to protect the public interest:

(1) To consider "pending litigation" as that term is defined in subdivision (e) of Section 11126.

(2) To consider proposed legislation.

(3) To consider issuance of a legal opinion.

(4) To consider disciplinary action involving a state officer or employee.

(5) To consider the purchase, sale, exchange, or lease of real property.

(6) To consider license examinations and applications.

(7) To consider an action on a loan or grant provided pursuant to Division 31 (commencing with Section 50000) of the Health and Safety Code**.**

(b) When a special meeting is called pursuant to one of the purposes specified in subdivision (a), the state body shall provide notice of the special meeting to each member of the state body and to all parties that have requested notice of its meetings as soon as is practicable after the decision to call a special meeting has been made, but shall be delivered in a manner that allows it to be received by the members and by newspapers of general circulation and radio or television stations at least 48 hours before the time of the special meeting specified in the notice. Notice shall be made available to newspapers of general circulation and radio or television stations by providing that notice to all national press wire services. Notice shall also be made available on the Internet within the time periods required by this section. The notice shall specify the time and place of the special meeting and

the business to be transacted. The written notice shall additionally specify the address of the Internet site where notices required by this article are made available. No other business shall be considered at a special meeting by the state body. The written notice may be dispensed with as to any member who at or prior to the time the meeting convenes files with the clerk or secretary of the state body a written waiver of notice. The waiver may be given by telegram, facsimile transmission, or similar means. The written notice may also be dispensed with as to any member who is actually present at the meeting at the time it convenes. Notice shall be required pursuant to this section regardless of whether any action is taken at the special meeting.

(c) At the commencement of any special meeting, the state body must make a finding in open session that the delay necessitated by providing notice 10 days prior to a meeting as required by Section 11125 would cause a substantial hardship on the body or that immediate action is required to protect the public interest. The finding shall set forth the specific facts that constitute the hardship to the body or the impending harm to the public interest. The finding shall be adopted by a two-thirds vote of the body, or, if less than two-thirds of the members are present, a unanimous vote of those members present. The finding shall be made available on the Internet. Failure to adopt the finding terminates the meeting.

(Added by Stats. 1997, c. 949 (S.B. 95), §5. Amended by Stats.1999, c. 393 (A.B. 1234), §2.)

§11125.5 Emergency meetings

(a) In the case of an emergency situation involving matters upon which prompt action is necessary due to the disruption or threatened disruption of public facilities, a state body may hold an emergency meeting without complying with the 10-day notice requirement of Section 11125 or the 48-hour notice requirement of Section 11125.4.

(b) For purposes of this section, "emergency situation" means any of the following, as determined by a majority of the members of the state body during a meeting prior to the emergency meeting, or at the beginning of the emergency meeting:

(1) Work stoppage or other activity that severely impairs public health or safety, or both.

(2) Crippling disaster that severely impairs public health or safety, or both.

(c) However, newspapers of general circulation and radio or television stations that have requested notice of meetings pursuant to Section 11125 shall be notified by the presiding officer of the state body, or a designee thereof, one hour prior to the emergency meeting by telephone. Notice shall also be made available on the Internet as soon as is practicable after the decision to call the emergency meeting has been made. If telephone services are not functioning, the notice requirements of this section shall be deemed waived, and the presiding officer of the state body, or a designee thereof, shall notify those newspapers, radio stations, or television stations of the fact of the holding of the emergency meeting, the purpose of the meeting, and any action taken at the meeting as soon after the meeting as possible.

(d) The minutes of a meeting called pursuant to this section, a list of persons who the presiding officer of the state body, or a designee thereof, notified or attempted to notify, a copy of the roll call vote, and any action taken at the meeting shall be posted for a minimum of 10 days in a public place, and also made available on the Internet for a minimum of 10 days, as soon after the meeting as possible.

(Amended by Stats.1992, c. 1312 (A.B. 2912), §11, eff. Sept. 30, 1992; Stats. 1997, c. 949 (S.B. 95) §6; Stats. 1999, c.393 (A.B. 1234), §3.)

§11125.6 Fish and Game Commission; emergency meetings; appeals of fishery closures or restrictions

(a) An emergency meeting may be called at any time by the president of the Fish and Game Commission or by a majority of the members of the commission to consider an appeal of a closure of or restriction in a fishery adopted pursuant to Section 7710 of the Fish and Game Code. In the case of an emergency situation involving matters upon which prompt action is necessary due to the disruption or threatened disruption of an established fishery, the commission may hold an emergency meeting without complying with the 10-day notice requirement of Section 11125 or the 48-hour notice requirement of Section 11125.4 if the delay necessitated by providing the 10-day notice of a public meeting required by Section 11125 or the 48-hour notice required by Section 11125.4 would

significantly adversely impact the economic benefits of a fishery to the participants in the fishery and to the people of the state or significantly adversely impact the sustainability of a fishery managed by the state.

(b) At the commencement of an emergency meeting called pursuant to this section, the commission shall make a finding in open session that the delay necessitated by providing notice 10 days prior to a meeting as required by Section 11125 or 48 hours prior to a meeting as required by Section 11125.4 would significantly adversely impact the economic benefits of a fishery to the participants in the fishery and to the people of the state or significantly adversely impact the sustainability of a fishery managed by the state. The finding shall set forth the specific facts that constitute the impact to the economic benefits of the fishery or the sustainability of the fishery. The finding shall be adopted by a vote of at least four members of the commission, or, if less than four of the members are present, a unanimous vote of those members present. Failure to adopt the finding shall terminate the meeting.

(c) Newspapers of general circulation and radio or television stations that have requested notice of meetings pursuant to Section 11125 shall be notified by the presiding officer of the commission, or a designee thereof, one hour prior to the emergency meeting by telephone.

(d) The minutes of an emergency meeting called pursuant to this section, a list of persons who the president of the commission, or a designee thereof, notified or attempted to notify, a copy of the roll call vote, and any action taken at the meeting shall be posted for a minimum of 10 days in a public place as soon after the meeting as possible.

(Added by Stats.1998, c. 1052 (A.B. 1241), §21.)

§11125.7 Agenda item discussion before state body; opportunity for public address; regulation by state body; freedom of expression; application of provisions

(a) Except as otherwise provided in this section, the state body shall provide an opportunity for members of the public to directly address the state body on each agenda item before or during the state body's discussion or consideration of the item. This section is not applicable if the agenda item has already been considered by a committee composed exclusively of members of the state body at a public meeting where interested members of the public were afforded the opportunity to address the committee on the item, before or during the committee's consideration of the item, unless the item has been substantially changed since the committee heard the item, as determined by the state body. Every notice for a special meeting at which action is proposed to be taken on an item shall provide an opportunity for members of the public to directly address the state body concerning that item prior to action on the item. In addition, the notice requirement of Section 11125 shall not preclude the acceptance of testimony at meetings, other than emergency meetings, from members of the public, provided, however, that no action is taken by the state body at the same meeting on matters brought before the body by members of the public.

(b) The state body may adopt reasonable regulations to ensure that the intent of subdivision (a) is carried out, including, but not limited to, regulations limiting the total amount of time allocated for public comment on particular issues and for each individual speaker.

(c) The state body shall not prohibit public criticism of the policies, programs, or services of the state body, or of the acts or omissions of the state body. Nothing in this subdivision shall confer any privilege or protection for expression beyond that otherwise provided by law.

(d) This section is not applicable to closed sessions held pursuant to Section 11126.

(e) This section is not applicable to decisions regarding proceedings held pursuant to Chapter 5 (commencing with Section 11500), relating to administrative adjudication, or to the conduct of those proceedings.

(f) This section is not applicable to hearings conducted by the State Board of Control pursuant to Sections 13963 and 13963.1.

(g) This section is not applicable to agenda items that involve decisions of the Public Utilities Commission regarding adjudicatory hearings held pursuant to Chapter 9 (commencing with Section 1701) of Part 1 of Division 1 of the Public Utilities Code. For all other agenda items, the commission shall provide members of the public,

other than those who have already participated in the proceedings underlying the agenda item, an opportunity to directly address the commission before or during the commission's consideration of the item.

(Added by Stats. 1993, c. 1289 (S.B. 367) §2. Amended by Stats. 1995, c. 938 (S.B. 523), §13, operative July 1, 1997; Stats. 1997, c. 949 (S.B. 95), §7.)

§11125.8 Hearings to consider crimes against minors or crimes of sexual assault or domestic violence; identification of applicant; disclosure of nature of hearing

(a) Notwithstanding Section 11131.5, in any hearing that the State Board of Control conducts pursuant to Section 13963.1 and that the applicant or applicant's representative does not request be open to the public, no notice, agenda, announcement, or report required under this article need identify the applicant.

(b) In any hearing that the board conducts pursuant to Section 13963.1 and that the applicant or applicant's representative does not request be open to the public, the board shall disclose that the hearing is being held pursuant to Section 13963.1. That disclosure shall be deemed to satisfy the requirements of subdivision (a) of Section 11126.3.

(Added by Stats. 1997, c. 949 (S.B. 95), §9.)

§11125.9 Regional water quality control boards; compliance with notification guidelines

Regional water quality control boards shall comply with the notification guidelines in Section 11125 and, in addition, shall do both of the following:

(a) Notify, in writing, all clerks of the city councils and county boards of supervisors within the regional board's jurisdiction of any and all board hearings at least 10 days prior to the hearing any and all board hearings at least 10 days prior to the hearing. Notification shall include an agenda for the meeting with contents as described in subdivision (b) of Section 11125 as well as the name, address, and telephone number of any person who can provide further information prior to the meeting, but need not include a list of witnesses expected to appear at the meeting. Each clerk, upon receipt of the notification of a board hearing, shall distribute the notice to all members of the respective city council or board of supervisors within the regional board's jurisdiction.

(b) Notify, in writing, all newspapers with a circulation rate of at least 10,000 within the regional board's jurisdiction of any and all board hearings, at least 10 days prior to the hearing. Notification shall include an agenda for the meeting with contents as described in subdivision (b) of Section 11125 as well as the name, address, and telephone number of any person who can provide further information prior to the meeting, but need not include a list of witnesses expected to appear at the meeting.

(Added by Stats.1997, c. 301 (A.B. 116) §1.)

§11126 Closed sessions

(a) **(1)** Nothing in this article shall be construed to prevent a state body from holding closed sessions during a regular or special meeting to consider the appointment, employment, evaluation of performance, or dismissal of a public employee or to hear complaints or charges brought against that employee by another person or employee unless the employee requests a public hearing.

(2) As a condition to holding a closed session on the complaints or charges to consider disciplinary action or to consider dismissal, the employee shall be given written notice of his or her right to have a public hearing, rather than a closed session, and that notice shall be delivered to the employee personally or by mail at least 24 hours before the time for holding a regular or special meeting. If notice is not given, any disciplinary or other action taken against any employee at the closed session shall be null and void.

(3) The state body also may exclude from any public or closed session, during the examination of a witness, any or all other witnesses in the matter being investigated by the state body.

(4) Following the public hearing or closed session, the body may deliberate on the decision to be reached in a closed session.

(b) For the purposes of this section, "employee" does not include any person who is elected to, or appointed to a public office by, any state body. However, officers of the California State University who receive compensation for their services, other than per diem and ordinary and necessary expenses, shall, when engaged in that capacity, be considered employees. Furthermore, for purposes of this section, the term employee includes a person exempt from civil service pursuant to subdivision (e) of Section 4 of Article VII of the California Constitution.

(c) Nothing in this article shall be construed to do any of the following:

(1) Prevent state bodies that administer the licensing of persons engaging in businesses or professions from holding closed sessions to prepare, approve, grade, or administer examinations.

(2) Prevent an advisory body of a state body that administers the licensing of persons engaged in businesses or professions from conducting a closed session to discuss matters that the advisory body has found would constitute an unwarranted invasion of the privacy of an individual licensee or applicant if discussed in an open meeting, provided the advisory body does not include a quorum of the members of the state body it advises. Those matters may include review of an applicant's qualifications for licensure and an inquiry specifically related to the state body's enforcement program concerning an individual licensee or applicant where the inquiry occurs prior to the filing of a civil, criminal, or administrative disciplinary action against the licensee or applicant by the state body.

(3) Prohibit a state body from holding a closed session to deliberate on a decision to be reached in a proceeding required to be conducted pursuant to Chapter 5 (commencing with Section 11500) or similar provisions of law.

(4) Grant a right to enter any correctional institution or the grounds of a correctional institution where that right is not otherwise granted by law, nor shall anything in this article be construed to prevent a state body from holding a closed session when considering and acting upon the determination of a term, parole, or release of any individual or other disposition of an individual case, or if public disclosure of the subjects under discussion or consideration is expressly prohibited by statute.

(5) Prevent any closed session to consider the conferring of honorary degrees, or gifts, donations, and bequests that the donor or proposed donor has requested in writing to be kept confidential.

(6) Prevent the Alcoholic Beverage Control Appeals Board from holding a closed session for the purpose of holding a deliberative conference as provided in Section 11125.

(7) **(A)** Prevent a state body from holding closed sessions with its negotiator prior to the purchase, sale, exchange, or lease of real property by or for the state body to give instructions to its negotiator regarding the price and terms of payment for the purchase, sale, exchange, or lease.

(B) However, prior to the closed session, the state body shall hold an open and public session in which it identifies the real property or real properties that the negotiations may concern and the person or persons with whom its negotiator may negotiate.

(C) For purposes of this paragraph, the negotiator may be a member of the state body.

(D) For purposes of this paragraph, "lease" includes renewal or renegotiation of a lease.

(E) Nothing in this paragraph shall preclude a state body from holding a closed session for discussions regarding eminent domain proceedings pursuant to subdivision (e).

(8) Prevent the California Postsecondary Education Commission from holding closed sessions to consider matters pertaining to the appointment or termination of the Director of the California Postsecondary Education Commission.

(9) Prevent the Council for Private Postsecondary and Vocational Education from holding closed sessions to consider matters pertaining to the appointment or termination of the Executive Director of the Council for Private Postsecondary and Vocational Education.

(10) Prevent the Franchise Tax Board from holding closed sessions for the purpose of discussion of confidential tax returns or information the public disclosure of which is prohibited by law, or from considering matters pertaining to the appointment or removal of the Executive Officer of the Franchise Tax Board.

(11) Require the Franchise Tax Board to notice or disclose any confidential tax information considered in closed sessions, or documents executed in connection therewith, the public disclosure of which is prohibited pursuant to Article 2 (commencing with Section 19542) of Chapter 7 of Part 10.2 of the Revenue and Taxation Code**.**

(12) Prevent the Board of Corrections from holding closed sessions when considering reports of crime conditions under Section 6027 of the Penal Code.

(13) Prevent the State Air Resources Board from holding closed sessions when considering the proprietary specifications and performance data of manufacturers.

(14) Prevent the State Board of Education or the Superintendent of Public Instruction, or any committee advising the board or the superintendent, from holding closed sessions on those portions of its review of assessment instruments pursuant to Chapter 5 (commencing with Section 60600) of, or pursuant to Chapter 8 (commencing with Section 60850) of, Part 33 of the Education Code during which actual test content is reviewed and discussed. The purpose of this provision is to maintain the confidentiality of the assessments under review.

(15) Prevent the California Integrated Waste Management Board or its auxiliary committees from holding closed sessions for the purpose of discussing confidential tax returns, discussing trade secrets or confidential or proprietary information in its possession, or discussing other data, the public disclosure of which is prohibited by law.

(16) Prevent a state body that invests retirement, pension, or endowment funds from holding closed sessions when considering investment decisions. For purposes of consideration of shareholder voting on corporate stocks held by the state body, closed sessions for the purposes of voting may be held only with respect to election of corporate directors, election of independent auditors, and other financial issues that could have a material effect on the net income of the corporation. For the purpose of real property investment decisions that may be considered in a closed session pursuant to this paragraph, a state body shall also be exempt from the provisions of paragraph (7) relating to the identification of real properties prior to the closed session.

(17) Prevent a state body, or boards, commissions, administrative officers, or other representatives that may properly be designated by law or by a state body, from holding closed sessions with its representatives in discharging its responsibilities under Chapter 10 (commencing with Section 3500), Chapter 10.3 (commencing with Section 3512), Chapter 10.5 (commencing with Section 3525), or Chapter 10.7 (commencing of Section 3540) of Division 4 of Title 1 as the sessions relate to salaries, salary schedules, or compensation paid in the form of fringe benefits. For the purposes enumerated in the preceding sentence, a state body may also meet with a state conciliator who has intervened in the proceedings.

(d) **(1)** Notwithstanding any other provision of law, any meeting of the Public Utilities Commission at which the rates of entities under the commission's jurisdiction are changed shall be open and public.

(2) Nothing in this article shall be construed to prevent the Public Utilities Commission from holding closed sessions to deliberate on the institution of proceedings, or disciplinary actions against any person or entity under the jurisdiction of the commission.

(e) **(1)** Nothing in this article shall be construed to prevent a state body, based on the advice of its legal counsel, from holding a closed session to confer with, or receive advice from, its legal counsel regarding

pending litigation when discussion in open session concerning those matters would prejudice the position of the state body in the litigation.

(2) For purposes of this article, all expressions of the lawyer-client privilege other than those provided in this subdivision are hereby abrogated. This subdivision is the exclusive expression of the lawyer-client privilege for purposes of conducting closed session meetings pursuant to this article. For purposes of this subdivision, litigation shall be considered pending when any of the following circumstances exist:

(A) An ad judicatory proceeding before a court, an administrative body exercising its adjudicatory authority, a hearing officer, or an arbitrator, to which the state body is a party, has been initiated formally.

(B) **(i)** A point has been reached where, in the opinion of the state body on the advice of its legal counsel, based on existing facts and circumstances, there is a significant exposure to litigation against the state body.

(ii) Based on existing facts and circumstances, the state body is meeting only to decide whether a closed session is authorized pursuant to clause (i).

(C) **(i)** Based on existing facts and circumstances, the state body has decided to initiate or is deciding whether to initiate litigation.

(ii) The legal counsel of the state body shall prepare and submit to it a memorandum stating the specific reasons and legal authority for the closed session. If the closed session is pursuant to paragraph (1), the memorandum shall include the title of the litigation. If the closed session is pursuant to subparagraph (A) or (B), the memorandum shall include the existing facts and circumstances on which it is based. The legal counsel shall submit the memorandum to the state body prior to the closed session, if feasible, and in any case no later than one week after the closed session. The memorandum shall be exempt from disclosure pursuant to Section 6254.25.

(iii) For purposes of this subdivision, "litigation" includes any adjudicatory proceeding, including eminent domain, before a court, administrative body exercising its adjudicatory authority, hearing officer, or arbitrator.

(iv) Disclosure of a memorandum required under this subdivision shall not be deemed as a waiver of the lawyer-client privilege, as provided for under Article 3 (commencing with Section 950) of Chapter 4 of Division 8 of the Evidence Code.

(f) In addition to subdivisions (a), (b), and (c), nothing in this article shall be construed to do any of the following:

(1) Prevent a state body operating under a joint powers agreement for insurance pooling from holding a closed session to discuss a claim for the payment of tort liability or public liability losses incurred by the state body or any member agency under the joint powers agreement.

(2) Prevent the examining committee established by the State Board of Forestry and Fire Protection, pursuant to Section 763 of the Public Resources Code, from conducting a closed session to consider disciplinary action against an individual professional forester prior to the filing of an accusation against the forester pursuant to Section 11503.

(3) Prevent an administrative committee established by the California Board of Accountancy pursuant to Section 5020 of the Business and Professions Code from conducting a closed session to consider disciplinary action against an individual accountant prior to the filing of an accusation against the accountant pursuant to Section 11503. Nothing in this article shall be construed to prevent an examining committee established by the California Board of Accountancy pursuant to Section 5023 of the Business and Professions Code from conducting a closed hearing to interview an individual applicant or accountant regarding the applicant's qualifications.

(4) Prevent a state body, as defined in subdivision (b) of Section 11121, from conducting a closed session to consider any matter that properly could be considered in closed session by the state body whose authority it exercises.

(5) Prevent a state body, as defined in subdivision (d) of Section 11121, from conducting a closed session to consider any matter that properly could be considered in a closed session by the body defined as a state body pursuant to subdivision (a) or (b) of Section 11121.

(6) Prevent a state body, as defined in subdivision (c) of Section 11121, from conducting a closed session to consider any matter that properly could be considered in a closed session by the state body it advises.

(7) Prevent the State Board of Equalization from holding closed sessions for either of the following:

(A) When considering matters pertaining to the appointment or removal of the Executive Secretary of the State Board of Equalization.

(B) For the purpose of hearing confidential taxpayer appeals or

(8) Require the State Board of Equalization to disclose any action taken in closed session or documents executed in connection with that action, the public disclosure of which is prohibited by law pursuant to Sections 15619 and 15641 of this code and Sections 833, 7056, 8255, 9255, 11655, 30455, 32455, 38705, 38706, 43651, 45982, 46751, 50159, 55381, and 60609 of the Revenue and Taxation Code.

(9) Prevent the California Earthquake Prediction Evaluation Council, or other body appointed to advise the Director of the Office of Emergency Services or the Governor concerning matters relating to volcanic or earthquake predictions, from holding closed sessions when considering the evaluation of possible predictions.

(g) This article does not prevent either of the following:

(1) The Teachers' Retirement Board or the Board of Administration of the Public Employees' Retirement System from holding closed sessions when considering matters pertaining to the recruitment, appointment, employment, or removal of the chief executive officer or when considering matters pertaining to the recruitment or removal of the Chief Investment Officer of the State Teachers' Retirement System or the Public Employees' Retirement System.

(2) The Commission on Teacher Credentialing from holding closed sessions when considering matters relating to the recruitment, appointment, or removal of its executive director.

(Amended by Stats. 1992, c. 1050(A.B. 2987) §17; Stats. 1994, c. 26 (A.B. 1807), §230, eff. March 30, 1994; Stats. 1994, c. 422 (A.B. 2589), §15.5, eff. Sept 7, 1994; Stats. 1994, c. 845 (S.B. 1316), §1; Stats. 1995, c. 975 (A.B. 265), §3; Stats. 1996, c. 1041 (A.B. 3358), §2; Stats. 1997, c. 949 (S.B. 95), §8; Stats. 1998, c. 210(S.B. 2008), §1; Stats. 1998, c. 972 (S.B. 989), §1; Stats. 1999, c. 735 (S.B. 366), §9, eff. Oct 10, 1999; Stats. 2000, c. 1002 (S.B. 1998), §1; Stats. 2000, c. 1055 (A.B. 2899), §30, eff. Sept 30, 2000; Stats. 2001, c. 21 (S.B. 54), §1, eff. June 25, 2001; Stats. 2001, c. 243 (A.B. 192), §10.)

§11126.1 Record of topics discussed and decisions made at closed sessions; availability

The state body shall designate a clerk or other officer or employee of the state body, who shall then attend each closed session of the state body and keep and enter in a minute book a record of topics discussed and decisions made at the meeting. The minute book made pursuant to this section is not a public record subject to inspection pursuant to the California Public Records Act (Chapter 3.5 (commencing with Section 6250) of Division 7 of Title 1), and shall be kept confidential. The minute book shall be available to members of the state body or, if a violation of this chapter is alleged to have occurred at a closed session, to a court of general jurisdiction. Such minute book may, but need not, consist of a recording of the closed session.

(Added by Stats. 1980, c. 1284, p. 4340, §12; Amended by Stats. 1981, c. 968, p. 3691, §13.)

§11126.3 Disclosure of nature of items to be discussed in closed session; scope of session; notice of meeting; announcement of pending litigation; unnecessary disclosures; disclosures at open session following closed session

(a) Prior to holding any closed session, the state body shall disclose, in an open meeting, the general nature of the item or items to be discussed in the closed session. The disclosure may take the form of a reference to the item or items as they are listed by number or letter on the agenda. If the session is closed pursuant to paragraph (2) of subdivision (d) of Section 11126, the state body shall state the title of, or otherwise specifically identify, the proceeding or disciplinary action contemplated. However, should the body determine that to do so would jeopardize the body's ability to effectuate service of process upon one or more unserved parties if the proceeding or disciplinary action is commenced or that to do so would fail to protect the private economic and business reputation of the person or entity if the proceeding or disciplinary action is not commenced, then the state body shall notice that there will be a closed session and describe in general terms the purpose of that session. If the session is closed pursuant to subparagraph (A) of paragraph (2) of subdivision (e) of Section 11126, the state body shall state the title of, or otherwise specifically identify, the litigation to be discussed unless the body states that to do so would jeopardize the body's ability to effectuate service of process upon one or more unserved parties, or that to do so would jeopardize its ability to conclude existing settlement negotiations to its advantage.

(b) In the closed session, the state body may consider only those matters covered in its disclosure.

(c) The disclosure shall be made as part of the notice provided for the meeting pursuant to Section 11125 or pursuant to subdivision (a) of Section 92032 of the Education Code and of any order or notice required by Section 11129.

(d) If, after the agenda has been published in compliance with this article, any pending litigation (under subdivision (e) of Section 11126) matters arise, the postponement of which will prevent the state body from complying with any statutory, court-ordered, or other legally imposed deadline, the state body may proceed to discuss those matters in closed session and shall publicly announce in the meeting the title of, or otherwise specifically identify, the litigation to be discussed, unless the body states that to do so would jeopardize the body's ability to effectuate service of process upon one or more unserved parties, or that to do so would jeopardize its ability to conclude existing settlement negotiations to its advantage. Such an announcement shall be deemed to comply fully with the requirements of this section.

(e) Nothing in this section shall require or authorize a disclosure of names or other information that would constitute an invasion of privacy or otherwise unnecessarily divulge the particular facts concerning the closed session or the disclosure of which is prohibited by state or federal law.

(f) After any closed session, the state body shall reconvene into open session prior to adjournment and shall make any reports, provide any documentation, and make any other disclosures required by Section 11125.2 of action taken in the closed session.

(g) The announcements required to be made in open session pursuant to this section may be made at the location announced in the agenda for the closed session, as long as the public is allowed to be present at that location for the purpose of hearing the announcement.

(Amended by Stats. 1997, c. 949(S.B. 95), §10; Stats. 1998, c. 210(S.B. 2008), §2; Stats. 2001, c. 243(A.B. 192), §11.)

§11126.5 Disorderly conduct of general public during meeting; clearing of room

In the event that any meeting is willfully interrupted by a group or groups of persons so as to render the orderly conduct of such meeting unfeasible and order cannot be restored by the removal of individuals who are willfully interrupting the meeting the state body conducting the meeting may order the meeting room cleared and continue in session. Nothing in this section shall prohibit the state body from establishing a procedure for readmitting an individual or individuals not responsible for willfully disturbing the orderly conduct of the meeting. Notwithstanding any other provision of law, only matters appearing on the agenda may be considered in such a session. Representatives of the press or other news media, except those participating in the disturbance, shall be allowed to attend any session held pursuant to this section.

(Added by Stats. 1970, c. 1610, p. 3385, §1; Amended by Stats. 1981, c. 968, p. 3692, §15.)

§11126.7 Fees
No fees may be charged by a state body for providing a notice required by Section 11125 or for carrying out any provision of this article, except as specifically authorized pursuant to this article.

(Added by Stats. 1980, c. 1284, p. 4341, §14; Amended by Stats. 1981, c. 968, p. 3692, §16.)

§11127 Application of article
Each provision of this article shall apply to every state body unless the body is specifically excepted from that provision by law or is covered by any other conflicting provision of law.

(Added by Stats. 1967, c. 1656, p. 4026, §122. Amended by Stats. 1981, c. 968, p. 3692, §17.)

§11128 Time of closed session
Each closed session of a state body shall be held only during a regular or special meeting of the body.

(Added by Stats. 1967, c. 1656, p. 4026, §122. Amended by Stats. 1980, c. 1284, p. 4341, §15; Stats. 1981, c. 968, p. 3692, §18.)

§11128.5 Adjournment; declaration; notice; hour for reconvened meeting
The state body may adjourn any regular, adjourned regular, special, or adjourned special meeting to a time and place specified in the order of adjournment. Less than a quorum may so adjourn from time to time. If all members are absent from any regular or adjourned regular meeting, the clerk or secretary of the state body may declare the meeting adjourned to a stated time and place and he or she shall cause a written notice of the adjournment to be given in the same manner as provided in Section 11125.4 for special meetings, unless that notice is waived as provided for special meetings. A copy of the order or notice of adjournment shall be conspicuously posted on or near the door of the place where the regular, adjourned regular, special, or adjourned special meeting was held within 24 hours after the time of the adjournment. When a regular or adjourned regular meeting is adjourned as provided in this section, the resulting adjourned regular meeting is a regular meeting for all purposes. When an order of adjournment of any meeting fails to state the hour at which the adjourned meeting is to be held, it shall be held at the hour specified for regular meetings by law or regulation.

(Added by Stats. 1997, c. 949(S.B. 95), §11.)

§11129 Continuance; posting notice
Any hearing being held, or noticed or ordered to be held by a state body at any meeting may by order or notice of continuance be continued or recontinued to any subsequent meeting of the state body in the same manner and to the same extent set forth in Section 11128.5 for the adjournment of meetings. A copy of the order or notice of continuance shall be conspicuously posted on or near the door of the place where the hearing was held within 24 hours after the time of the continuance; provided, that if the hearing is continued to a time less than 24 hours after the time specified in the order or notice of hearing, a copy of the order or notice of continuance of hearing shall be posted immediately following the meeting at which the order or declaration of continuance was adopted or made.

§11130 Actions to prevent violations or determine applicability of article; validity of rules discovery expression; taping of closed sessions; discovery procedures for tapes
(a) The Attorney General, the district attorney, or any interested person may commence an action by mandamus, injunction, or declaratory relief for the purpose of stopping or preventing violations or threatened violations of this article or to determine the applicability of this article to past actions or threatened future action by members of the state body or to determine whether any rule or action by the state body to penalize or otherwise discourage the expression of one or more of its members is valid or invalid under the laws of this state or of the United States, or to compel the state body to tape record its closed sessions as hereinafter provided.

(b) The court in its discretion may, upon a judgment of a violation of Section 11126, order the state body to tape record its closed sessions and preserve the tape recordings for the period and under the terms of security and confidentiality the court deems appropriate.

(c) **(1)** Each recording so kept shall be immediately labeled with the date of the closed session recorded and the title of the clerk or other officer who shall be custodian of the recording.

(2) The tapes shall be subject to the following discovery procedures:

(A) In any case in which discovery or disclosure of the tape is sought by the Attorney General, the district attorney, or the plaintiff in a civil action pursuant to this section or Section 11130.3 alleging that a violation of this article has occurred in a closed session that has been recorded pursuant to this section, the party seeking discovery or disclosure shall file a written notice of motion with the appropriate court with notice to the governmental agency that has custody and control of the tape recording. The notice shall be given pursuant to subdivision (b) of Section 1005 of the Code of Civil Procedure.

(B) The notice shall include, in addition to the items required by Section 1010 of the Code of Civil Procedure, all of the following:

(i) Identification of the proceeding in which discovery or disclosure is sought, the party seeking discovery or disclosure, the date and time of the meeting recorded, and the governmental agency that has custody and control of the recording.

(ii) An affidavit that contains specific facts indicating that a violation of the act occurred in the closed session.

(3) If the court, following a review of the motion, finds that there is good cause to believe that a violation has occurred, the court may review, in camera, the recording of that portion of the closed session alleged to have violated the act.

(4) If, following the in-camera review, the court concludes that disclosure of a portion of the recording would be likely to materially assist in the resolution of the litigation alleging violation of this article, the court shall, in its discretion, make a certified transcript of the portion of the recording a public exhibit in the proceeding.

(5) Nothing in this section shall permit discovery of communications that are protected by the attorney-client privilege.

(Amended by Stats. 1997, c. 949 (S.B. 95), §13; Stats. 1999, c. 393 (A.B. 1234), §4.)

§11130.3 Judicial determination action by state body in violation of §§ 11123 or 11125 null and void; action by interested person; grounds

(a) Any interested person may commence an action by mandamus, injunction, or declaratory relief for the purpose of obtaining a judicial determination that an action taken by a state body in violation of Section 11123 or 11125 is null and void under this section. Any action seeking such a judicial determination shall be commenced within 90 days from the date the action was taken. Nothing in this section shall be construed to prevent a state body from curing or correcting an action challenged pursuant to this section.

(b) An action shall not be determined to be null and void if any of the following conditions exist:

(1) The action taken was in connection with the sale or issuance of notes, bonds, or other evidences of indebtedness or any contract, instrument, or agreement related thereto.

(2) The action taken gave rise to a contractual obligation upon which a party has, in good faith, detrimentally relied.

(3) The action taken was in substantial compliance with Sections 11123 and 11125.

(4) The action taken was in connection with the collection of any tax.

(Amended by Stats. 1999, c. 393 (A.B. 1234), §5.)

§11130.5 Court costs and attorney fees

A court may award court costs and reasonable attorney's fees to the plaintiff in an action brought pursuant to Section 11130 or 11130.3 where it is found that a state body has violated the provisions of this article. The costs and fees shall be paid by the state body and shall not become a personal liability of any public officer or employee thereof.

A court may award court costs and reasonable attorney's fees to a defendant in any action brought pursuant to Section 11130 or 11130.3 where the defendant has prevailed in a final determination of the action and the court finds that the action was clearly frivolous and totally lacking in merit.

(Added by Stats. 1975, c. 959, p. 2240, §6. Amended by Stats. 1981, c. 968, p. 3693, §21; Stats. 1985, c. 936, §2.)

§11130.7 Violations; misdemeanor

Each member of a state body who attends a meeting of that body in violation of any provision of this article, and where the member intends to deprive the public of information to which the member knows or has reason to know the public is entitled under this article, is guilty of a misdemeanor.

(Amended by Stats. 1997, c. 949(S.B. 95), §14.)

§11131 Use of facility allowing discrimination; state agency

No state agency shall conduct any meeting, conference, or other function in any facility that prohibits the admittance of any person, or persons, on the basis of race, religious creed, color, national origin, ancestry, or sex, or that is inaccessible to disabled persons, or where members of the public may not be present without making a payment or purchase. As used in this section, "state agency" means and includes every state body, office, officer, department, division, bureau, board, council, commission, or other state agency.

(Amended by Stats. 1997, c. 949(S.B. 95), §15.)

§11131.5 Identity of victims or alleged victims of crimes, tortuous sexual conduct, or child abuse; public disclosure

No notice, agenda, announcement, or report required under this article need identify any victim or alleged victim of crime, tortuous sexual conduct, or child abuse unless the identity of the person has been publicly disclosed.

(Added by Stats. 1997, c. 949 (S.B. 95), §16.)

§11132 Closed session by state body prohibited

Except as expressly authorized by this article, no closed session may be held by any state body.

(Added by Stats. 1987, c. 1320, §4.)

9. RULEMAKING

Health and Safety Code

PART 2.5. STATE BUILDING STANDARDS
CHAPTER 1. GENERAL PROVISIONS AND DEFINITIONS

§18901	Short title
§18902	State Buildings Standards Code; Title 24 of California Administrative Codes; references
§18903	Repealed
§18904	Repealed
§18905	Construction
§18905.5	Adopting agency
§18906	Adoption or adopt
§18907	Approval
§18908	Building; structure
§18909	Building standard
§18910	Code
§18911	Codification; codify
§18912	Commission
§18913	Emergency Standard
§18914	Executive Director
§18915	Local Agency
§18916	Model code
§18917	Occupancy
§18917.2	Propose
§18917.3	Publication; publish
§18917.5	Secretary
§18918	State Agency
§18919	Regulation
§18920	Existence; composition
§18921	Appointed members
§18922	Chair; vice chair
§18923	Term of Office
§18924	Compensation; travel expenses
§18925	Executive Director
§18926	Coordinating Council; existence; membership duties
§18927	Advisory panels; qualifications of persons appointed; compensation
§18928	Model code, national standard or specification; adoption and reference to most recent addition; date of publication; committee
§18928.1	Building standards; incorporation of model codes, applicable specifications or published standards; publication agreement
§18929	Adoption of administrative regulations applying to implementation or enforcement of building standards; publication; certain Housing and Community Development
§18929.1	Adoption of regulations for annual code adoption cycle; procedures, contents
§18930	Approval of adoption of building standards; analysis and criteria; review considerations; factual determinations
§18931	Duties
§18931.5	Review and publication costs; payment of proportionate share
§18932	Contents and format of code
§18933	Amendment or repeal of building standards
§18934	Public participation; guidelines
§18934.5	Standards for state buildings; adoption, approval, codification and publication
§18934.6	Uniform Code for Building Conservation of the International Conference of Building Officials; publication of standards; exception

§18934.7	Uniform Code for Building Conservation of the International Conference of Building Officials; publication of standards; exception
§18934.8	Amendments to California Building Code; emergency amendments
§18935	Proposed building standards or administrative regulations; notice and hearings; initial statement of reasons; review and publication; approval of hearings; changes
§18936	Notices of Meetings
§18937	Emergency Standards
§18938	Filing and codification; publication; effective date; application of section
§18938.5	Application of standards
§18940	Codification of standards or administrative regulations
§18941	Standards; administration and enforcement; performance basis
§18941.5	Amendments, additions, deletions to standards; effective date; publication date; more restrictive standards
§18941.6	Hazardous building ordinances and programs; building standards; local conditions; exceptions; study
§18941.7	Closed Military Basses; compliance with state and local regulations or standards
§18941.8	March Air Force Base; graduated compliance with regulations or standards; adoption of ordinance; conditions
§18941.9	Graduated compliance; adoption of ordinances; application; condition
§18942	Publication; supplements; emergency standards; availability and possession of code
§18942.1	Filing of regulations or orders of repeal; transmittal
§18943	Effect of standards in individual titles
§18944	Reference to code in agency regulations
§18944.5	Agencies bound by code
§18944.7	State historical building code; alternative regulations and standards; maintenance as separate and distinct part or portion
§18945	Right to appeal
§18946	Hearing; reference; decision
§18947	Appeal to occupational safety and health appeals board
§18948	Responsibility for enforcement and administration
§18949	Fee Schedule
§18949.1	State Architect, transfer of responsibilities to commission
§18949.2	State Fire Marshal; formal rule making process; transfer of duties to commission; fire and life safety standards; development; review, modification
§18949.3	Office of Statewide Health Planning and Development; transfer of duties to commission
§18949.4	State Energy Resources Conservation and Development Commission; submission of standards for review and approval; time schedule
§18949.5	Department of Housing and Community Development; transfer of duties to commission
§18949.6	Procedure for adoption of standards and administrative regulations
§18949.25	Construction inspector
§18949.26	Plans examiner
§18949.27	Building Official
§18949.28	Experience and certification requirements; exemptions
§18949.29	Continuing Education
§18949.30	Application of Chapter
§18949.31	Local agencies; costs and fees

§18901 Short title

(a) This part shall be known and may be cited as the California Building Standards Law.

(b) The California Building Standards Commission shall continue within the State and Consumer Services Agency.

(Amended by Stats. 1997, c. 580 (S.B. 320), §5.)

§18902 State Building Standards Code; Title 24 of California Administrative Code; references
All references to the State Building Standards Code, Title 24 of the California Administrative Code shall mean the California Building Standards Code.

(Amended by Stats. 1992, c.897 (A.B.3515), § 1.)

§18903 Repealed by Stats.1979, c.1152, p.4292, §162

§18904 Repealed by Stats.1979, c.1152, p.4292, §162

§18905 Construction
Unless the context otherwise requires, the definitions contained in this article shall govern the construction of this part.

(Added by Stats.1979, c. 1152, p. 4292, § 163.)

§18905.5 Adopting agency
"Adopting agency" means a state agency responsible for the adoption of building standards.

(Amended by Stats. 1992, c. 897 (A.B. 3515, §2.)

§18906 Adoption or adopt
"Adoption" or "adopt" means, with respect to the procedure for promulgation of a building standard, the final act of a state agency that has the legislative authority and responsibility to take proposed building standards to public hearing.

(Amended by Stats. 1992, c. 897 (A.B.3515), § 3.)

§18907 Approval
"Approval" means, with respect to the procedure for promulgation of a building standard, the action of approval by the California Building Standards Commission. Until there is approval of the standard by the commission, it shall be a proposed building standard or regulation.

(Amended by Stats. 1992, c. 897, (A.B.3515), § 4.)

§18908 Building; structure
(a) "Building" means any structure used for support or shelter of any use or occupancy. "Structure" means that which is built or constructed, an edifice or building of any kind or any piece of work artificially built or composed of parts joined together in some definite manner, except any mobile home as defined in Section 18008, manufactured home, as defined in Section 18007, special purpose commercial coach, as defined in Section 18012.5, and recreational vehicle, as defined in Section 18010.

(b) "Building" includes a structure wherein things may be grown, made, produced, kept, handled, stored, or disposed of.

(c) All appendages, accessories, apparatus, appliances, and equipment installed as a part of building or structure shall be deemed to be a part thereof.

(d) "Building" does not include machinery, equipment, or appliances installed for manufacture or process purposes only, any construction installations, which are not a part of a building, or any tunnel, mineshaft, highway, or bridge.

(Added by Stats.1979, c. 1152, p. 4292, §163. Amended by Stats.1987, c. 1053, § 3.)

§18909 Building standard
(a) "Building standard" means any rule, regulation, order, or other requirement, including any amendment or repeal of that requirement, which specifically regulates, requires, or forbids the method of use, properties, performance, or types of materials used in the construction, alteration, improvement, repair, or rehabilitation of a

building, structure, factory-built housing, or other improvement to real property, including fixtures therein, and as determined by the commission.

(b) Except as provided in subdivision (d), "building standard" includes architectural and design functions of a building or structure, including, but not limited to, number and location of doors, windows, and other openings, stress or loading characteristics of materials, and methods of fabrication, clearances, and other functions.

(c) "Building standard" includes a regulation or rule relating to the implementation or enforcement of a building standard not otherwise governed by statute, but does not include the adoption of procedural ordinances by a city or other public agency relating to civil, administrative, or criminal procedures and remedies available for enforcing code violations.

(d) "Building standard" does not include any safety regulations which any state agency is authorized to adopt relating to the operation of machinery and equipment used in manufacturing, processing, or fabricating, including, but not limited to, warehousing and food processing operations, but not including safety regulations relating to permanent appendages, accessories, apparatus, appliances, and equipment attached to the building as a part thereof, as determined by the commission.

(e) "Building standard" does not include temporary scaffoldings and similar temporary safety devices and procedures, which are used in the erection, demolition, moving, or alteration of buildings.

(f) "Building standard" does not include any regulation relating to the internal management of a state agency.

(g) "Building standard" does not include any regulation, rule, order, or standard, which pertains to mobile homes, manufactured homes, commercial coaches, special purpose commercial coaches, or recreational vehicles.

(h) "Building standard" does not include any regulation, rule, or order or standard which pertains to a mobile home park, recreational vehicle park, temporary recreational vehicle park, or travel trailer park, except that "building standard" includes the construction of permanent buildings and plumbing, electrical, and fuel gas equipment and installations within permanent buildings in mobile home parks, recreational vehicle parks, temporary recreational vehicle parks, or travel trailer parks. For purposes of this subdivision, "permanent building" means any permanent structure constructed in the Mobile Home Park, recreational vehicle park, temporary recreational vehicle park, or travel trailer park which is a permanent facility under the control and ownership of the park operator.

(i) "Building standard" does not include any regulation, rule, order, or standard which pertains to mausoleums regulated under Part 5 (commencing with Section 9501) of Division 8.

(j) "Building standard" does not include any regulation adopted by the California Integrated Waste Management Board, the Department of Toxic Substances Control, or the State Water Resources Control Board concerning the discharge of waste to land or the treatment, transfer, storage, resource recovery, disposal, or recycling of the waste.

(Amended by Stats.1992, c.897 (A.B.3515), §5; Stats. 1993, c.663 (A.B.54), §2.)

§18910 Code

"Code" means the California Building Standards Code, including the triennial editions and supplements.

(Amended by Stats.1992, c.897 (A.B.3515), §6.)

§18911 Codification; codify

"Codification" or "codify" means to arrange building standards in the publication format of the code as determined by the commission.

(Amended by Stats.1992, c. 897 (A.B. 3515), §7.)

§18912 Commission
"Commission" means the California Building Standards Commission.

(Amended by Stats.1992, c. 897 (A.B.3515), §8.)

§18913 Emergency standard
"Emergency standard" means either of the following:

(a) A building standard or an order of repeal of a building standard filed for publication in the code by the commission pursuant to Section 11346.1 of the Government Code.

(b) A building standard adopted by the Occupational Safety and Health Standards Board which is at least as effective as a federal standard promulgated under Section 6 of the federal Occupational Safety and Health Act of 1970 (Public Law 91-596).

(Amended by Stats.1992, c. 897 (A.B.3515), § 9.)

§18914 Executive Director
"Executive director" means the Executive Director of the California Building Standards Commission.

(Amended by Stats.1992, c. 897 (A.B.3515), §10.)

§18915 Local Agency
"Local agency" means a city, county, and city and county, whether general law or chartered, district agency, authority, board, bureau, department, commission, or other governmental entity of less than statewide jurisdiction. Local agency includes any entity of regional jurisdiction. Local agency does not include an agency of the federal government.

(Added by Stats.1979, c. 1152, p. 4292, §163.)

§18916 Model code
"Model code" means any building code drafted by private organizations or otherwise, and shall include, but not be limited to, the latest edition of the following:

(a) The Uniform Building Code of the International Conference of Building Officials.

(b) The Uniform Plumbing Code of the International Association of Plumbing and Mechanical Officials.

(c) The Uniform Mechanical Code of the International Conference of Building Officials and the International Association of Plumbing and Mechanical Officials.

(d) The National Electrical Code of the National Fire Protection Association.

(e) The Uniform Fire Code of the International Conference of Building Officials and the Western Fire Chiefs Association, Inc.

(f) Appendix Chapter 1 of the Uniform Code for Building Conservation of the International Conference of Building Officials.

(Added by Stats. 1979, c. 1152, p. 4292, §163. Amended by Stats. 1987, c. 1053, §8; Stats. 1989, c. 1360, §94; Stats. 1989, c. 952, § 2; Stats. 1991, c. 173 (A.B. 204), § 2.)

§18917 Occupancy
"Occupancy" means the purpose for which a building, structure, or other improvement to property, or a part thereof, is used or intended to be used.

(Added by Stats.1979, c. 1152, p. 4292, §163.)

§18917.2 Propose
"Propose" refers, with respect to the procedure for promulgation of a building standard, to the state agency that has the legislative authority and responsibility to write proposed building standards.

(Added by Stats. 1992, c. 897 (A.B.3515), § 10.5.)

§18917.3 Publication; publish
"Publication" or "publish" means to print and make available to the public the California Building Standards Code or administrative regulations that apply directly to the implementation or enforcement of building standards.

(Added by Stats.1979, c. 1152, p. 4292, §163. Amended by Stats. 1987, c. 1053, §9; Stats. 1988, c. 1194, §8, operative Jan. 1, 1989.)

§18917.5 Secretary
"Secretary" means the Secretary of the State and Consumer Services Agency.

(Added by Stats.1979, c.1152, p. 4292, §163.)

§18918 State agency
"State agency" means a state agency as defined in Section 11000 of the Government Code.

(Added by Stats.1979, c. 1152, p. 4292, §163. Amended by Stats.1987, c.1053, §10.)

§18919 Regulation
"Regulation" means any rule, regulation, ordinance, or order promulgated by a state or local agency, including rules, regulations, or orders relating to occupancy or the use of land. "Regulation" includes building standards.

(Added by Stats.1979, c. 1152, p. 4292, §163.)

§18920 Existence; composition
There is continued in existence in the State and Consumer Services Agency a California Building Standards Commission consisting of the Secretary of State and Consumer Services Agency, and 10 members appointed by the Governor subject to confirmation by the Senate.

(Added by Stats.1979, c. 1152, p. 4292, §163. Amended by Stats.1987, c. 1053, §10.5)

§18921 Appointed members
(a) The appointed members of the commission shall be selected from, and represent the public, design professions, the building and construction industry, local government building officials, fire and safety officials, and labor in accordance with the following:

(b) Four members shall be appointed from among the professions and industries concerned with building construction as follows:

(1) An architect.

(2) A mechanical or electrical engineer or fire protection engineer.

(3) A structural engineer.

(4) A licensed contractor.

(c) Three members shall be appointed from among the general public at least one of whom shall be a physically handicapped person.

(d) One member shall be appointed from organized labor in the building trades.

(e) One member shall be appointed who is a local building official.

(f) One member shall be appointed who is a local fire official.

(g) At least one member of the commission shall be experienced and knowledgeable in barrier free architecture and aware of, and sensitive to, the requirements necessary to ensure public buildings are accessible to, and usable by, the physically handicapped.

(h) At least one member of the commission shall be experienced and knowledgeable in building energy efficiency standards.

As used in this section, "physically handicapped" means persons who have permanent mobility impairments which affect ambulation due to cerebral palsy, poliomyelitis, spinal cord injury, amputation, and other conditions or diseases which reduce mobility or require the use of crutches, canes, or wheelchairs.

(Added by Stats.1979, c.1152, p. 4292, §163. Amended by Stats. 1980, c. 1064, p. 3408, §1; Stats.1987, c. 1053, §11; Stats. 1988, c. 1194, §8.5, operative Jan. 1, 1989; Stats. 1991, c. 865 (A.B.47), §19.)

§18922 Chair; vice chair

The Secretary of the State and Consumer Services Agency or the secretary's representative shall serve as the chair of the commission. The commission shall elect a vice chair annually from among its members.

(Amended by Stats.1997, c.580 (S.B.320), §6.)

§18923 Term of office

(a) The term of office of members of the commission shall be four years and they shall hold office until the appointment and qualification of their successors, not to exceed 180 days after the term is expired.

(b) The term of members of the commission shall be staggered based on the following cycle:

(1) The terms of two members shall expire on January 1, 1981.

(2) The terms of three members shall expire on January 1, 1982.

(3) The terms of two members shall expire on January 1, 1983.

(4) The terms of three members shall expire on January 1, 1984.

(c) Prior members of the commission may be reappointed.

(d) In the event of a vacancy prior to the expiration of a term, an appointment shall be made to fill the balance of the unexpired term.

(Added by Stats.1979, c.1152, p.4292, §163. Amended by Stats.1987, c.1053, §12; Amended by Stats.1997, c.580 (S.B. 320), §7. Amended by Stats.1997, c.580 (S.B.320), §7.)

§18924 Compensation; travel expenses

The members of the commission shall serve without compensation. Members of the commission who are not state officers shall be paid their actual necessary travel expenses.

(Added by Stats.1979, c.1152, p.4292, §163.)

§18925 Executive Director

The commission shall appoint an Executive Director of the California Building Standards Commission, who shall hold office at the pleasure of the commission. The executive director shall make public the processes of the commission. The executive director shall appoint, in accordance with civil service and other provisions of law, officers and employees necessary to carry out the intent and purposes of this part.

(Added by Stats.1979, c.1152, p.4292, §163. Amended by Stats.1984, c.677, §4; Amended by Stats.1992, c. 897 (A.B.3515), §13.)

§18926 Coordinating Council; existence; membership; duties

(a) There is, in the office of the executive director, a coordinating council. The membership of the council shall consist of the executive director, who shall serve as chairperson, and representatives appointed by the State Director of Health Services, the Director of the Office of Statewide Health Planning and Development, the Director of Housing and Community Development, the Director of Industrial Relations, the State Fire Marshal, the Executive Director of the State Energy Resources Conservation and Development Commission, and the Director of General Services.

(b) Subject to the pleasure of the commission:

(1) The council or any member of the council shall, when called and directed in writing by the executive director, work with and assist an agency proposing building standards or adopting building standards, or both, in the development of proposals for building standards.

(2) When a state agency contemplates the adoption of any building standard, it shall, prior to commencing any action to prepare a draft of the proposal, advise the executive director, in writing, of that intent and request the executive director to call the council, or any member of the council, as appropriate, for assistance.

(3) Whenever the commission returns for amendment, or rejects any proposed building standard, and one of the reasons for that action is that approval of the proposal would create a conflict with existing building standards of other adopting agencies, the executive director shall call the council or any member of the council, as appropriate, to assist in the elimination of the conflict.

(4) The council shall draft proposed building standards, which the commission is authorized to adopt pursuant to Section 18933 for the consideration of the commission and approval, utilizing the criteria of Section 18930.

(Added by Stats.1979, c.1152, p.4292, §163. Amended by Stats.1981, c.817, p.3165, §3; Stats.1984, c.677, §5; Stats.1988, c.1194, §9, operative Jan. 1, 1989; Amended by Stats.1992, c. 897(A.B. 3515), § 14.)

§18927 Advisory panels; qualifications of persons appointed; compensation

The commission may appoint from the design professions, the building and construction industry, the affected general public, and interested governmental agencies, appropriate advisory panels to advise the commission and its staff with respect to building standards. The persons appointed to the panels shall be specifically knowledgeable and qualified in the type of work embraced by the building standards in question. These persons shall serve without compensation, but may receive actual necessary travel expenses.

(Added by Stats.1979, c.1152, p. 4292, §163. Amended by Stats.1987, c.1053, §13; Stats. 1988, c.1194, §10, operative Jan. 1, 1989; Amended by Stats.1992, c.897 (A.B.3515), §15.)

§18928 Model code, national standard, or specification; adoption of and reference to most recent addition; date of publication; committee

(a) Each state agency adopting or proposing adoption of a model code, national standard, or specification shall reference the most recent edition of applicable model codes, national standards, or specifications.

(b) Each state agency adopting or proposing adoption of a model code, national standard, or specification shall adopt or propose adoption of the most recent editions of the model codes, as amended or proposed to be amended by the adopting agency, within one year after the date of publication of the model codes, national standards, or specifications. The "date of publication of a model code, national standard, or specification" is either of the following:

(1) The date of publication printed in the model code, national standard, or specification. If only a month and year are shown by the model code, national standard, or specification adopting agency or body, the date of publication shall be considered to be the last day of the month shown.

(2) The date determined by the commission, if no publication date is shown in the model code, national standard, or specification. The commission shall notify all adopting agencies of its determination within 15 days.

(c) If the adopting agencies fail to comply with subdivision (b), the commission shall convene a committee to recommend to the commission the adoption, amendment, or repeal, on the agencies' behalf, of the most recent editions of the model codes, national standards, or specifications and necessary state standards.

(Added by Stats.1985, c. 623, §1. Amended by Stats.1987, c. 1053, §14; Stats.1988, c. 1194, §10.5, operative Jan. 1, 1989; Amended by Stats.1997, c. 645 (A.B. 1071), §13.)

§18928.1 Building standards; incorporation of model codes, applicable national specifications or published standards; publication agreement

Building standards adopted or approved by the commission shall incorporate the text of the model codes, applicable national specifications, or published standards, in whole or in part, only by reference, with appropriate additions or deletions there from. The commission may elect to adopt or approve standards which incorporate, in whole or in part, the text of these publications, with changes therein, or deletions there from, directly incorporated into the text of the California Building Standards Code, but no textual material contained in any of the model codes, as enumerated in Section 18916, may be included in the California Building Standards Code by means other than incorporation by reference, unless the commission and the governing body of the organization that publishes the model codes first reach a written agreement concerning the terms and conditions of the publication, including, but not limited to, whether the publication will be by the commission or the model code organization, or both. The model code governing body may not withhold any publication agreement on the basis of the substantive provisions contained in the California Building Standards Code.

(Added by Stats.1992, c.897 (A.B.3515), §16.)

§18929 Adoption of administrative regulations applying to implementation or enforcement of building standards; publication; certain Housing and Community Development

(a) Except as otherwise provided in subdivision (b), administrative regulations adopted by state agencies that apply directly to the implementation or enforcement of building standards shall be forwarded to the California Building Standards Commission for approval. Each regulation shall be adopted in compliance with the procedures specified in Section 18930 and in Article 5 (commencing with Section 11346) of Chapter 3.5 of Part 1 of Division 3 of Title 2 of the Government Code. These administrative regulations shall be published in the administrative part of the California Building Standards Code.

(b) This section shall not apply to any regulations adopted by the Department of Housing and Community Development that apply directly to the implementation or enforcement of building standards.

(Added by Stats. 1988, c. 1194, §11, operative Jan. 1, 1989. Amended by Stats. 1989, c. 952, §3; Stats.1989, c. 1144, §6, eff. Sept. 30, 1989; Stats. 1991, c. 865 (A.B.47), §20; Amended by Stats.1992, c. 897 (A.B. 3515), §16.5)

§18929.1 Adoption of regulations for annual code adoption cycle; procedures, contents

(a) The commission shall receive proposed building standards from state agencies for consideration in an annual code adoption cycle. The commission shall develop regulations setting forth the procedures for the annual adoption cycle. The regulations shall ensure all of the following:

(1) Adequate public participation in the development of building standards prior to submittal to the commission for adoption and approval.

(2) Adequate notice, in written form, to the public of the compiled building standards and their justification.

(3) Adequate technical review of proposed building standards and accompanying justification by advisory bodies appointed by the commission.

(4) Adequate time for review of recommendations by advisory bodies prior to action by the commission.

(5) The procedures shall meet the intent of the Administrative Procedure Act (Chapter 5 (commencing with Section 11500) of Division 3 of Title 2 of the Government Code) and Section 18930.

(b) Where this section is in conflict with other provisions of this part, the intent of this section shall prevail.

(Added by Stats.1992, c. 897 (A.B.3515), §17.)

§18930 Approval or adoption of building standards; analysis and criteria; review considerations; factual determinations

(a) Any building standard adopted or proposed by state agencies shall be submitted to, and approved or adopted by, the California Building Standards Commission prior to codification. Prior to submission to the commission, building standards shall be adopted in compliance with the procedures specified in Article 5 (commencing with Section 11346) of Chapter 3.5 of Part 1 of Division 3 of Title 2 of the Government Code. Building standards adopted by state agencies and submitted to the commission for approval shall be accompanied by an analysis written by the adopting agency or state agency that proposes the building standards which shall, to the satisfaction of the commission, justify the approval thereof in terms of the following criteria:

(1) The proposed building standards do not conflict with, overlap, or duplicate other building standards.

(2) The proposed building standard is within the parameters established by enabling legislation and is not expressly within the exclusive jurisdiction of another agency.

(3) The public interest requires the adoption of the building standards.

(4) The proposed building standard is not unreasonable, arbitrary, unfair, or capricious, in whole or in part.

(5) The cost to the public is reasonable, based on the overall benefit to be derived from the building standards.

(6) The proposed building standard is not unnecessarily ambiguous or vague, in whole or in part.

(7) The applicable national specifications, published standards, and model codes have been incorporated therein as provided in this part, where appropriate.

(A) If a national specification, published standard, or model code does not adequately address the goals of the state agency, a statement defining the inadequacy shall accompany the proposed building standard when submitted to the commission.

(B) If there is no national specification, published standard, or model code that is relevant to the proposed building standard, the state agency shall prepare a statement informing the commission and submit that statement with the proposed building standard.

(8) The format of the proposed building standards is consistent with that adopted by the commission.

(9) The proposed building standard, if it promotes fire and panic safety, as determined by the State Fire Marshal, has the written approval of the State Fire Marshal.

(b) In reviewing building standards submitted for its approval, the commission shall consider only the record of the proceedings of the adopting agency, except as provided in subdivision (b) of Section 11359 of the Government Code

(c) Where the commission is the adopting agency, it shall consider the record submitted to, and considered by, the state agency that proposes the building standards and the record of public comment that results from the commission's adoption of proposed regulations.

(d) **(1)** The commission shall give great weight to the determinations and analysis of the adopting agency or state agency that proposes the building standards on each of the criteria for approval set forth in subdivision

(a). Any factual determinations of the adopting agency or state agency that proposes the building standards shall be considered conclusive by the commission unless the commission specifically finds, and sets forth its reasoning in writing, that the factual determination is arbitrary and capricious or substantially unsupported by the evidence considered by the adopting agency or state agency that proposes the building standards.

(2) Whenever the commission makes a finding, as described in this subdivision, it shall return the standard to the adopting agency or state agency that proposes the building standards for a reexamination of its original determination of the disputed fact.

(e) Whenever a building standard is principally intended to protect the public health and safety, its adoption shall not be a "factual determination" for purposes of subdivision (d). Whenever a building standard is principally intended to conserve energy or other natural resources, the commission shall consider or review the cost to the public or benefit to be derived as a "factual determination" pursuant to subdivision (d). Whenever a building standard promotes fire and panic safety, each agency shall, unless adopted by the State Fire Marshal, submit the building standard to the State Fire Marshal for prior approval.

(f) Whenever the commission finds, pursuant to paragraph (2) of subdivision (a), that a building standard is adopted by an adopting agency pursuant to statutes requiring adoption of the building standard, the commission shall not consider or review whether the adoption is in the public interest pursuant to paragraph (3) of subdivision (a).

(Added by Stats.1979, c. 1152, p.4292, §163. Amended by Stts.1981, c. 1177, p.4743, §8; Stats.1985, c. 209, §1; Stats.1985, c.632, §2; Stats.1986, c. 200, §1; Stats. 1987, c. 1053, §15; Stats.1988, c. 1194, §12, operative Jan. 1, 1989; Stats 1991, c. 865 (A.B.47), §21; Amended by Stats.1992, c. 897 (A.B.3515), §17.5; Stats.1995, c. 938 (S.B.523), §65.4, operative Jan. 1, 1996.)

§18931 Duties

The commission shall perform the following:

(a) In accordance with Section 18930 and within 120 days from the date of receipt of adopted standards, review the standards of adopting agencies and approve, return for amendment with recommended changes, or reject building standards submitted to the commission for its approval. When building standards are returned for amendment or rejected, the commission shall inform the adopting agency or state agency that proposes the building standards of the specific reasons for the recommended changes or rejection, citing the criteria required under Section 18930. When standards are not acted upon by the commission within 120 days, the standards shall be approved, including codification and publication in the California Building Standards Code, without further review and without return or rejection by the commission.

(b) Codify, including publish, all building standards of adopting agencies or state agencies that propose the building standards and statutes defining building standards into one California Building Standards Code.

(c) Resolve conflict, duplication, and overlap in building standards in the code.

(d) Ensure consistency in nomenclature and format in the code.

(e) In accordance with Section 18945, hear appeals resulting from the administration of state building standards.

(f) Adopt any procedural regulations, which it deems necessary to administer this part.

(g) The commission shall direct the executive director to prepare a comprehensive listing of all state amendments developed for publication in the California State Building Code (Part 2 (commencing with Section 101), Title 24, California Code of Regulations), referencing the 1994 Edition of the Uniform Building Code, as published by the International Conference of Building Officials, for the period beginning January 1, 1995, through December 31, 1995. The listing shall identify the following:

(1) Each new state amendment to the 1994 Edition of the Uniform Building Code, as published by the International Conference of Building Officials, and the state agency that adopted the new amendment.

(2) **(A)** The analysis justifying the adoption or proposal of the amendment identified in paragraph (1), submitted pursuant to paragraph (2) of subdivision (a) of Section 18930.

(B) The analysis justifying the adoption or proposal of the amendment identified in paragraph (1), submitted pursuant to paragraph (3) of Section 18930.

(C) The analysis justifying the adoption or proposal of the amendment identified in paragraph (1), submitted pursuant to paragraph (5) of Section 18930.

(D) The analysis justifying the adoption or proposal of the amendment identified in paragraph (1), submitted pursuant to paragraph (7), or to subparagraph (A) or (B) of paragraph (7) of subdivision (a) of Section 18930.

(3) Existing state amendments, published in earlier editions of the California State Building Code (Part 2 (commencing with Section 101), Title 24, California Code of Regulations), which are published in the California State Building Code referencing the 1994 Edition of the Uniform Building Code, as published by the International Conference of Building Officials.

(4) The California Building Standards Commission's determination as to whether the amendment referred to in paragraph (3) continues to be justified under the criteria set forth in Section 18930. The commission shall use information gathered in the study required by Chapter 1289 of the Statutes of 1990 in making its determination, and may also request information from the state agency that adopted or proposed the amendments.

The commission shall perform this task to the extent feasible, and within the existing budget constraints during the triennial adoption process of the California Building Standards Code, referencing the 1994 Edition of the Uniform Building Code as published by the International Conference of Building Officials. The commission shall be authorized to reduce the scope of the review should fiscal restraints warrant this action. In the event a reduction in the scope of the review is made, the commission shall give priority to those sections of the California State Building Code (Part 2, commencing with Section 101), Title 24, California Code of Regulations) that directly affect residential construction.

(5) Upon completion of the comprehensive listing required by this subdivision, the commission shall inform the public and all state agencies with the authority to develop building standards that the listing has been completed, and that copies will be made available upon request.

(Added by Stats.1979, c. 1152, p. 4292, §163. Amended by Stats.1988, c. 1194, §13, operative Jan. 1, 1989; Amended by Stats.1992, c. 897 (A.B.3515), §18; Stats.1994, c. 249 (A.B. 1780), §1.)

§18931.5 Review and publication costs; payment of proportionate share

(a) Each state agency that adopts or proposes building standards shall pay annually to the California Building Standards Commission a proportionate share of the cost of the review and publication of building standards, which are published or proposed to be published in the California Building Standards Code.

(b) The commission shall determine the proportional cost to be paid for review of existing building standards and the amount to be paid for review of building standards, adopted or proposed by a state agency, that have been submitted for publication in the California Building Standards Code.

(Added by Stats.1981, c. 1082, p.4173, §1. Amended by Stats.1988, c. 1194, §14, operative Jan. 1, 1989; Amended by Stats.1992, c. 897 (A.B.3515), §19.)

§18932 Contents and format of code

(a) The code shall indicate the agency having responsibility vested by law for the administration of each building standard and the occupancy or occupancies affected by each building standard.

(b) The code shall include an index and reference guide.

(c) The commission shall establish the format for the code to conform it as nearly as it deems practicable with the model codes.

(Added by Stats.1979, c. 1152, p.4292, §163. Amended by Stats.1987, c. 1053, §16; Stats.1988, c. 1194, §15, operative Jan. 1, 1989; Amended by Stats.1992, c. 897 (A.B.3515), §20.)

§18933 Amendment or repeal of building standards

(a) The commission may give affected state agencies reasonable time, as specified by the commission, to adopt amendments to building standards submitted for approval. If the agencies do not do so within the reasonable time as specified, the commission shall convene a committee composed of a representative from each of the agencies affected and any other qualified persons who are selected by the commission. This committee shall prepare a recommendation for commission action upon the building standards. Upon the recommendation, or if the committee does not prepare a recommendation and deliver it to the commission within 30 days after being appointed, the commission may rewrite, edit, amend, or adopt, and approve the building standards consistent with the intent of this part and in accordance with the Administrative Procedure Act and the criteria for approval provided in Section 18930. It shall not, however, be required that hearings or other administrative procedure be duplicated on unchanged portions of building standards previously adopted and approved by the commission.

(b) **(1)** Pursuant to Section 18943, the commission, after publication of building standards pursuant to Section 18941 in the triennial edition of the code, shall recommend to affected state agencies the repeal of building standards of those state agencies which were adopted, or are, in conflict with other published standards in the code. If the state agencies do not repeal the building standards within a reasonable time as specified by the commission, the commission shall convene a committee composed of a representative of each of the agencies affected and other qualified persons selected by the commission to prepare a recommendation for commission action on the building standards.

(2) Upon the recommendation, or if the committee does not prepare a recommendation and deliver it to the commission within 30 days after being appointed, the commission may repeal the building standards, in accordance with the Administrative Procedure Act. This subdivision shall not supersede Section 18943, but, instead, provides the procedure for effecting that section.

(Added by Stats.1979, c. 1152, p.4292, §163. Amended by Stats.1988, c. 1194, §16, operative Jan. 1, 1989; Amended by Stats. 1992, c. 897(A.B.3515), §21.)

§18934 Public participation; guidelines

State agencies proposing to adopt building standards shall adopt, and the commission shall approve, regulations establishing procedures to ensure public participation in the development of building standards and regulations.

(Added by Stats.1979, c.1152, p.4292, §163; Amended by Stats.1992, c. 897 (A.B.3515), §22.)

§18934.5 Standards for state buildings; adoption, approval, codification and publication

Where no state agency has the authority to adopt building standards applicable to state buildings, the commission shall adopt, approve, codify, and publish building standards providing the minimum standards for the design and construction of state buildings, including buildings constructed by the Trustees of the California State University and, to the extent permitted by law, to buildings designed and constructed by the Regents of the University of California. Building standards for state buildings shall comply with the criteria in subdivision (a) of Section 18930.

(Added by Stats.1981, c. 1082, p.4147, §2. Amended by Stats.1987, c. 053, §17; Stats.1988, c. 1194, §17, operative Jan. 1, 1989; Amended by Stats. 1992, c. 897 (A.B.3515), §23.)

§18934.6 Uniform Code for Building Conservation of the International Conference of Building Officials; publication of standards; exception

On or before January 1, 1993, the commission shall adopt, approve, codify, and publish by reference in the California Building Standards Code the building standards in Appendix Chapter 1 of the Uniform Code for Building Conservation of the International Conference of Building Officials to provide minimum standards for buildings

specified in that appendix, except for buildings subject to building standards adopted pursuant to Part 1.5 (commencing with Section 17910) of Division 13.

(Added by Stats. 1991, c. 865 (A.B.47), §22.)

§18934.7 Uniform Code for Building Conservation of the International Conference of Building Officials; publication of standards; exception

On or before January 1, 1993, the commission shall adopt, approve, codify, and publish by reference in the California Building Standards Code the building standards in Appendix Chapter 1 of the Uniform Code for Building Conservation of the International Conference of Building Officials to provide minimum standards for buildings specified in that appendix, except for buildings subject to building standards adopted pursuant to Part 1.5 (commencing with Section 17910).

(Added by Stats.1991, c. 865 (A.B.47), §22.)

§18934.8 Amendments to California Building Code; emergency amendments

(a) Pursuant to subdivision (b), the commission may adopt amendments to the California Building Standards Code provided that they are substantially the same as model code amendments, which were adopted on an emergency basis by the code publishers, if the sections being amended are not under the authority of a state agency.

(b) The commission may consider adoption of emergency amendments made to the model codes in an expedited rulemaking process outside the annual code adoption cycle set forth in Section 18929.1. If a model code organization adopts emergency amendments, the commission may adopt those amendments 120 days after the organization's adoption of those amendments. This rulemaking process shall be completed within 180 days from the date the amendments were adopted by the model code organization. The commission shall ensure that the rulemaking process includes all of the following:

(1) Adequate public participation in the development of building standards prior to submittal to the commission for adoption and approval.

(2) Adequate written notice to the public of the compiled building standards and the written justification therefore.

(3) Adequate technical review of proposed building standards and accompanying justification by advisory bodies appointed by the commission.

(4) Adequate time for review of recommendations by advisory bodies prior to action by the commission.

(c) Amendments to the California Building Standards Code adopted pursuant to this section shall take effect 60 days from the date on which they are adopted by the commission.

(d) Nothing in this section shall be construed to permit amendments to the California Building Standards Code that decrease the level of disabled access provided.
(Added by Stats.1996, c. 384 (A.B.3372), §1.)

§18935 Proposed building standards or administrative regulations; notice and hearings; initial statement of reasons; review and publication; approval of hearings; changes

(a) Notice of proposed building standards shall be given and hearings shall be held by the adopting agencies, as required by the Administrative Procedure Act, prior to the adoption of the building standards and submission to the commission for approval. The notice of proposed building standards and the initial statement of reasons for the proposed building standards shall comply with Article 5 (commencing with Section 11346) of Chapter 3.5 of Part 1 of Division 3 of Title 2 of the Government Code. The adopting agency or state agency that proposes the building standards shall submit the notice and initial statement of reasons for proposed building standards to the California Building Standards Commission, which shall review them for compliance with Article 5 (commencing with Section 11346) of Chapter 3.5 of Part 1 of Division 3 of Title 2 of the Government Code. If the commission determines that the adopting agency or state agency that proposes the building standards has complied with Article 5 (commencing with Section 11346) of Chapter 3.5 of Part 1 of Division 3 of Title 2 of the Government Code, the

commission shall approve the notice and initial statement of reasons for proposed building standards, and submit them to the Office of Administrative Law for the sole purpose of inclusion in the California Regulatory Notice Register. The Office of Administrative Law shall publish only those notices of proposed building standards, which have been approved by, and submitted to, the office by the California Building Standards Commission.

(b) In order to ensure an absence of conflict between hearings and a maximum opportunity for interested parties to be heard, no hearings by adopting agencies shall be conducted unless the time and place thereof has been approved in writing by the commission prior to public notices of the hearing being given by the adopting agencies.

(c) If, after building standards are submitted to the commission for approval, the commission requires changes therein as a condition for approval, and the changes are made, no additional hearing by the affected state agency shall be required in connection with making the changes when the commission determines the changes are nonsubstantial, solely grammatical in nature, or are sufficiently related to the text submitted to the commission for approval that the public was adequately placed on notice that the change could result from the originally proposed building standards.

(Added by Stats.1979, c. 1152, p.4292, §163. Amended by Stats.1983, c. 492, §1; Stats.1984, c. 677, §6; Stats.1988, c. 1194, §18, operative Jan. 1, 1989; Amended by Stats. 1992, c. 897 (A.B.3515), §25.)

§18936 Notices of meetings

The commission shall mail notices of meetings with respect to its proposed action on any building standards to any design profession organizations, chambers of commerce, consumer groups, building and construction industry organizations, governmental agencies, and other parties and organizations that have submitted a written request therefore at least 15 days prior to any meeting thereon, provided that the failure to do so shall not invalidate any commission action.

(Added by Stats.1979, c. 1152, p.4292, §163. Amended by Stats.1979, c. 1152, p.4326, §236, operative July 1, 1980; Stats.1987, c. 1053, §18; Stats.1988, c. 1194, §19, operative Jan. 1, 1989; Amended by Stats.1992, c. 897 (A.B.3515), §26.)

§18937 Emergency standards

(a) Emergency standards shall be acted on by the commission within 30 days and, except for building standards adopted by the Occupational Safety and Health Standards Board which are at least as effective as a federal standard promulgated under Section 6 of the federal Occupational Safety and Health Act of 1970 (Public Law 91-596), only when the adopting agency or state agency that proposes the building standards has made the finding of emergency required by Sections 11346.1 and 11346.5 of the Government Code and the adopting agencies have adopted the emergency standard in compliance with Section 11346.1 of the Government Code, and the commission concurs with that finding. Both the concurrence and the approval of the emergency building standards require an affirmative vote of two-thirds of the members of the commission attending a meeting, or not less than six affirmative votes, whichever is greater.

(b) Emergency standards approved by the commission pursuant to subdivision (a) shall be filed by the commission pursuant to Section 11346.1 of the Government Code and shall be subject to that section.

(Added by Stats.1979, c. 1152, p. 4292, §163. Amended by Stats.1992, c. 897 (A.B.3515), §27.)

§18938 Filing and codification; publication; effective date; application of section

(a) Building standards shall be filed with the Secretary of State and codified only after they have been approved by the commission and shall not be published in any other title of the California Code of Regulations. Emergency building standards shall be filed with the Secretary of State and shall take effect only after they have been approved by the commission as required by Section 18937. The filing of building standards adopted or approved pursuant to this part, or any certification with respect thereto, with the Secretary of State, or elsewhere as required by law, shall be done solely by the commission.

(b) The building standards contained in the Uniform Fire Code of the International Conference of Building Officials and the Western Fire Chiefs Association, Inc., the Uniform Building Code of the International Conference of Building Officials, Appendix Chapter 1 of the Uniform Code for Building Conservation of the International Conference of Building Officials, the Uniform Plumbing Code of the International Association of Plumbing and

Mechanical Officials, the National Electrical Code of the National Fire Protection Association, and the Uniform Mechanical Code of the International Conference of Building Officials and the International Association of Plumbing and Mechanical Officials, as referenced in the California Building Standards Code, shall apply to all occupancies throughout the state and shall become effective 180 days after publication in the California Building Standards Code by the California Building Standards Commission or at a later date after publication established by the commission.

(c) Except as otherwise provided in this subdivision, an adoption, amendment, or repeal of a building standard shall become effective 180 days after its publication in the triennial edition of the California Building Standards Code or one of its supplements, or at any later date as approved by the California Building Standards Commission, with the exceptions of building standards adopted by the Occupational Safety and Health Standards Board, standards adopted pursuant to Section 25402 of the Public Resources Code, and those regulations that implement or enforce building standards. Building standards adopted by the Occupational Safety and Health Standards Board and those regulations that implement or enforce building standards shall become effective 30 days after filing by the commission with the Secretary of State. This subdivision shall not apply to emergency building standards, and building standards approved pursuant to subdivision (b) of Section 142.3 of the Labor Code and published pursuant to subdivision (b) of Section 18943. An amendment or a repeal of a building standard in the California Building Standards Code that, as determined by the commission, would result in a less restrictive regulation, shall become effective 30 days after filing of the amendment or repeal by the commission with the Secretary of State.

(d) Emergency standards defined in subdivision (a) of Section 18913 shall become effective when approved by the commission, and filed with the Secretary of State, or upon any later date specified therein, and remain in effect as provided by Section 11346.1 of the Government Code and Section 18937 of this code. Emergency standards shall be distributed as soon as practicable after publication to all interested and affected parties. Notice of repeal, pursuant to Section 11346.1 of the Government Code, of emergency standards defined in subdivision (a) of Section 18913 within the period specified by that section, shall also be given to the parties by the affected agencies promptly after the termination of the statutory period pursuant to Section 11346.1 of the Government Code.

(e) This section shall not be applicable to the time limits set forth in Sections 17922 and 17958 for approval of uniform codes and for changes by local agencies in the California Building Standards Code.

(Added by Stats.1979, c. 1152, p. 4292, §163. Amended by Stats.1981, c. 1003, p. 3876, §3; Stats.1985, c. 209, §2; Stats.1987, c. 1053, §20; Stats.1988, c. 1194, §21, operative Jan. 1, 1989; Stats.1989, c. 952, §4.)

§18938.5 Application of standards

(a) Only those building standards approved by the commission, and that are effective at the local level at the time an application for a building permit is submitted, shall apply to the plans and specifications for, and to the construction performed under, that building permit.

(b) **(1)** A local ordinance adding or modifying building standards for residential occupancies, which are published in the California Building Standards Code, shall apply only to an application for a building permit submitted after the effective date of the ordinance and to the plans and specifications for, and the construction performed under, that permit.

(2) Paragraph (1) shall not apply to any of the following:

(A) A city or county that has been subject to an emergency proclaimed pursuant to the California Emergency Services Act (Chapter 7 (commencing with Section 8850) of Division 1 of Title 2 of the Government Code).

(B) A permit that is subsequently deemed expired because the building or work authorized by the permit is not commenced within 180 days from the date of the permit, or the permittee has suspended or abandoned the work authorized by the permit at any time after the work is commenced.

(C) A permit that is subsequently deemed suspended or revoked because the building official has, in writing, suspended or revoked the permit due to its issuance in error or on the basis of incorrect information supplied.

(c) No model code made applicable to any additional occupancy shall apply to any project that has been submitted for a building permit prior to the effective date of that model code.

(Added by Stats.1985, c. 577, §1, eff. Sept.14, 1985. Amended by Stats.1987, c. 1053, §21;Amended by Stats.1992, c. 623 (A.B.2963), §1; Stats.1992, c. 897(A.B.3515), §29.5.)

§18940 Codification of standards or administrative regulations

Codification of building standards approved by the commission shall be incorporated into the code and shall not be incorporated into other individual titles of state agencies in the California Code of Regulations.

(Added by Stats.1979, c. 1152, p.4292, §163. Amended by Stats.1981, c. 1003, p. 3876, §4; Stats. 1987, c. 1053, §22; Stats.1988, c. 1194, §23, operative Jan. 1, 1989; Amended by Stats.1992, c. 897 (A.B.3515), §31.)

§18941 Standards; administration and enforcement; performance basis

All building standards shall be administered and enforced and, whenever practicable, written on a performance basis consistent with state and nationally recognized standards for building construction in view of the use and occupancy of each structure to preserve and protect the public health and safety.

(Added by Stats.1979, c. 1152, p.4292, §163. Amended by Stats.1982, c. 507, §3, eff. July 13, 1982; Stats.1988, c. 1194, §24, operative Jan. 1, 1989; Amended by Stats.1992, c. 897 (A.B.3515), §32.)

§18941.5 Amendments, additions, deletions to standards; effective date; publication date; more restrictive standards

(a) **(1)** Amendments, additions, and deletions to the California Building Standards Code adopted by a city, county, or city and county pursuant to Section 18941.5 or pursuant to Section 17958.7, together with all applicable portions of the California Building Standards Code, shall become effective 180 days after publication of the California Building Standards Code by the commission, or at a later date after publication established by the commission.

(2) The publication date established by the commission shall be no earlier than the date the California Building Standards Code is available for purchase by the public.

(b) Neither the State Building Standards Law contained in this part, nor the application of building standards contained in this section, shall limit the authority of a city, county, or city and county to establish more restrictive building standards reasonably necessary because of local climatic, geological, or topographical conditions. The governing body shall make the finding required by Section 17958.7 and the other requirements imposed by Section 17958.7 shall apply to that finding. Nothing in this section shall limit the authority of fire protection districts pursuant to subdivision (a) of Section 13869.7. Further, nothing in this section shall require findings required by Section 17958.7 beyond those currently required for more restrictive building standards related to housing.

(Added by Stats.1979, c. 1152, p.4292, §163. Amended by Stats.1988, c. 1302, §1; Stats.1989, c. 952, §5; Stats.1991, c. 173 (A.B.204), §4; Stats.1991, c. 865 (A.B.47), §23.)

§18941.6 Hazardous building ordinances and programs; building standards; local conditions; exceptions; study

(a) Notwithstanding any other provision of this part, ordinances and programs adopted on or before January 1, 1993, that contain standards to strengthen potentially hazardous buildings pursuant to subdivision (b) of Section 8875.2 of the Government Code, shall incorporate the building standards in Appendix Chapter 1 of the Uniform Code for Building Conservation of the International Conference of Building Officials published in the California Building Standards Code, except for standards found by local ordinance to be inapplicable based on local conditions, as defined in subdivision (b), or based on an approved study pursuant to subdivision (c), or both. Ordinances and programs shall be updated in a timely manner to reflect changes in the model code, and more frequently if deemed necessary by local jurisdictions.

(b) For the purpose of subdivision (a), and notwithstanding the meaning of "local conditions" as used elsewhere in this part and Part 2.5 (commencing with Section 18901), the term "local conditions" shall be limited to those conditions that affect the implementation of seismic strengthening standards on the following only:

(1) The preservation of qualified historic structures as governed by the State Historical Building Code (Part 2.7 (commencing with Section 18950)).

(2) Historic preservation programs, including, but not limited to, the California Mainstreet Program.

(3) The preservation of affordable housing.

(c) Any ordinance or program adopted on or before January 1, 1993, may include exceptions for local conditions not defined in subdivision (b) if the jurisdiction has approved a study on or before January 1, 1993, describing the effects of the exceptions. The study shall include a seismic hazards assessment, seismic retrofit cost comparisons, and earthquake damage estimates for a major earthquake, including the differences in costs, deaths, and injuries between full compliance with Appendix Chapter 1 of the Uniform Code for Building Conservation and the ordinance or program. No study shall be required pursuant to this subdivision if the exceptions for local conditions not defined in subdivision (b) result in standards or requirements that are more stringent than those in Appendix Chapter 1 of the Uniform Code for Building Conservation.

(d) Ordinances and programs adopted pursuant to this section shall be conclusively presumed to comply with the requirements of Chapter 173 of the Statutes of 1991.[1]

(Added by Stats.1992, c. 346 (A.B.2358), §2. Amended by Stats.1993, c. 1294 (A.B.1904), §2, eff. October 11, 1993; Stats. 1994, c. 1219 (S.B. 1988), §2.)

[1]Amending Health & Safety Code §§17922, 18916, and 18941.5, and adding Health and Safety Code §18934.6.

§18941.7 Closed military bases; compliance with state and local regulations or standards

(a) The governing body of a city, county, city and county, or a joint powers agency which has been authorized to adopt and administer building and fire safety codes and standards may adopt an ordinance that allows a building or other structure located on a military base selected for closure by action of the federal Defense Base Closure and Realignment Commission to comply with this part and Division 12 (commencing with Section 13000), or any regulations or standards promulgated pursuant to this part, in a graduated manner over a period of no more than three years from the earlier of either the date the property has been transferred by, or the date a lease is entered into with, the federal government pursuant to paragraph (2), if all of the following conditions are met:

(1) The use of the building or structure is not hazardous to life safety, fire safety, health, or sanitation, as determined by the local building official and fire marshal.

(2) The building or other structure has been transferred by the federal government to the city, county, city and county, redevelopment agency, joint powers agency, or reuse entity or is under a lease between the city, county, city and county, redevelopment agency, joint powers agency, or reuse entity and the federal government.

(3) The governing body of the city, county, city and county, or a joint powers agency which has been authorized to adopt and administer building and fire safety codes and standards adopts a graduated compliance plan which includes all of the following:

(A) Requirements for buildings and structures with:

(i) No change in occupancy or use with no anticipated alterations.

(ii) No change in occupancy or use with planned alterations.

(iii) Change in occupancy or use with no anticipated alterations.

(iv) Change in occupancy or use with planned alterations.

(B) Requirements for a building and structure compliance inspection and a fire department inspection, and for preparation of inspection reports, prior to issuing a certificate of occupancy.

(C) Requirements for the inspection reports prepared pursuant to subparagraph (B) to be attached to the certificate of occupancy or provided to the occupants of the building or other structure.

(D) Requirements for the terms and period of time for compliance to be specified in the sublease.

(b) Nothing in this section affects the requirement of state consent to retrocession pursuant to Section 113 of the Government Code.

(c) This section shall be applicable to a building or other structure for which the conditions in paragraphs (1), (2), and (3) of subdivision (a) are met before January 1, 2000.

(d) This section shall remain in effect only until January 1, 2003, and as of that date is repealed, unless a later-enacted statute, that is enacted before January 1, 2003, deletes, or extends that date.

(Added by Stats.1995, c. 469 (S.B.81), §1, eff. Sept. 8, 1995. Amended by Stats.1996, c. 627 (S.B.1640), §1; Stats.1997, c. 645 (A.B.1071), §14.)

§18941.8 March Air Force Base; graduated compliance with regulations or standards; adoption of ordinance; conditions

(a) The governing body of a local agency may adopt an ordinance that allows a building or other structure designated in subdivision (b) to comply with this part and Division 12 (commencing with Section 13000), or to any regulations or standards promulgated pursuant to this part, in a graduated manner over a period of no more than seven years.

(b) This section shall apply only to those buildings and other structures located on the former March Air Force Base, commonly known as:

(1) The Ben Clark Training Center, formerly known as the Non-Commissioned Officers' Training Academy, including all buildings and structures on the approximately 360 acres.

(2) The buildings comprising the medical facility.

(3) The March Joint Powers Authority, Economic Development Conveyance area comprising buildings 659, 660, 755, 760, 768, 940, 941, 942, 962, 976, 977, 1054, 1055, 2594, 2595, 2620, 2622, 2706, 2991, 2992, 2993, 2994, and 2995.

(c) The period for graduated compliance shall begin with the date the title to the property was transferred by the federal government to a local agency.

(d) The authority for a local agency to adopt an ordinance pursuant to this section is an alternative to the authority provided by Section 18941.7, and shall not be used consecutively with Section 18941.7.

(e) An ordinance adopted by a local agency pursuant to subdivision (a) shall not apply to a building or other structure that will be used as a permanent residence.

(f) Prior to the adoption of the ordinance pursuant to subdivision (a), each of the following conditions shall be met:

(1) The use of the building or other structure is not hazardous to life safety, fire safety, health, or sanitation, as determined by the application of state and local building and fire codes and standards by the local building official and fire marshal.

(2) The building or other structure has been transferred by the federal government to a local agency.

(3) The governing body of the local agency adopts a graduated compliance plan, which includes all of the following:

(A) Requirements for buildings and structures with:

(i) No change in occupancy or use with no anticipated alterations.

(ii) No change in occupancy or use with planned alterations.

(iii) Change in occupancy or use with no anticipated alterations.

(iv) Change in occupancy or use with planned alterations.

(B) Requirements for a building and structure compliance inspection and a fire department inspection, and for preparation of inspection reports, prior to issuing a certificate of occupancy.

(C) Requirements for the inspection reports prepared pursuant to subparagraph (B) to be attached to the certificate of occupancy or provided to the occupants of the building or other structure.

(D) Requirements for the terms and period of time for compliance to be specified in the certificate of occupancy.

(E) Requirements that the alterations conform to the standards that were in effect at the time of the alteration.

(g) **(1)** Prior to the adoption of a graduated compliance plan, the local agency shall form a Compliance Plan Review Committee, hereafter referred to as the "committee," to comment on, and make recommendations to, the governing board of the local agency concerning the compliance plan.

(2) The committee shall be appointed by the governing board of the local agency and the membership of the committee shall contain at least one member from each of the following disciplines:

(A) Engineer, licensed by the State of California.

(B) Architect, licensed by the State of California.

(C) Building Inspector, certified by the International Conference of Building Officials or another similar recognized state, national, or international association.

(3) The committee may contain additional members at the discretion of the governing body of the local agency, whose unique background and knowledge may be of assistance to the committee.

(4) In no case shall the membership of the committee contain less than one member from the disciplines set forth in subparagraphs (A) to (C), inclusive, of paragraph (2).

(5) No member appointed to the committee shall be an employee of the local agency.

(6) The committee shall review the draft plan for its consistency with the requirements of this section, and report its written findings and recommendations to the governing board of the local agency. If the committee finds that the draft plan is not consistent with the requirements of this section, the committee shall recommend changes to the draft plan to achieve consistency.

(7) The local agency shall consider the findings and recommendations of the committee. If the committee finds that the draft plan is not consistent with the requirements of this section, the local agency shall take one of the following actions:

(A) Change the draft plan to be consistent with the requirements of this section, as recommended by the committee.

(B) Adopt the draft plan with some of the recommended changes or without changes, provided that the local agency makes written findings that explain the reasons why the local agency believes that the draft plan, as adopted, is consistent with the requirements of this section despite the findings and recommendations of the committee, which were not adopted by the local agency.

(8) The local agency shall file a copy of the approved graduated compliance plan with the California Building Standards Commission.

(h) **(1)** Five years after the commencement of the period for graduated compliance specified in subdivision (b), the local agency shall arrange for the committee to determine whether the buildings or other structures adhere to the graduated compliance plan.

(2) The committee membership shall be governed by subparagraphs (2) to (5) inclusive, of subdivision (g).

(3) If the committee determines that the buildings or other structures do not adhere to the graduated compliance plan, the committee shall recommend to the governing board of the local agency that the local building official should initiate appropriate proceedings to withdraw the certificate of occupancy for that building or structure.

(i) Nothing in this section affects the requirements of state consent to retrocession pursuant to Section 113 of the Government Code.

(j) As used in this section, "local agency" means the County of Riverside, a city within the County of Riverside with jurisdiction over the March Air Force Base or the March Air Reserve Base, or the March Joint Powers Authority.

(k) This section shall be applicable to a building or other structure for which a local agency adopts a graduated compliance plan before January 1, 2000.

(l) This section shall remain in effect only until January 1, 2007, and as of that date is repealed, unless a later enacted statute, that is enacted before January 1, 2007, deletes or extends that date.

(m) Nothing in this section shall affect local, state, or federal laws as they relate to access to the disabled.

(Added by Stats.1997, c. 633 (A.B.125), §1.)

§18941.9 Graduated compliance; adoption of ordinances; application; conditions

(a) The governing body of a local agency may adopt an ordinance that allows a building or other structure located on a former military base to comply with this part and Division 12 (commencing with Section 13000), or to any regulations or standards adopted pursuant to this part, in a graduated manner over a period of no more than seven years.

(b) This section shall apply only to those buildings and other structures located on the following military bases or on specified portions of former military bases that were selected for closure or realigned by action of the federal Defense Base Closure and Realignment Commission:

(1) At the former Castle Air Force Base, Building 1015 and Building 1075.

(2) At the former Hamilton Air Force Base, approximately 38 acres, commonly known as Planning Areas 6, 8, 9, and 10.

(3) The former Hunter's Point Naval Shipyard.

(4) The former Treasure Island Naval Station.

(5) The former San Diego Naval Training Center.

(6) At the Marine Corps Air Station-Tustin, approximately 100 acres, commonly known as Planning Areas 1, 2, 3, 6, 8, 9, 10, 16, and 17.

(7) At the Marine Corps Air Services-El Toro, Buildings 295, 296, 297, 313, 317, 318, 319, 360, 371, and 722.

(8) At the former Castle Air Force Base, Buildings 54, 175, 765, 871, 1015, 1200, 1212, 1213, 1319, 1320, 1322, 1324, 1332, 1333, 1335, 1340, 1509, 1535, 1540, and 1545.

(9) At the former Alameda Naval Air Station, Buildings 2, 3, 4, 5, 8, 16, 17, 18, and 94.

(10) At the Point Molate Naval Fuel Depot, Buildings 1, 6, 17, 63, 76, 85, 87, 123, and 132.

(11) At the Oakland Army Base, Buildings 001, 004, 005, 006, 006T, 010, 011, 014, 015, 060, 070, 085, 090, 099, 590, 640, 641, 645, 646, 650, 655, 660, 690, 701, 726, 738, 740, 780, 790, 792, 794, 796, 802, 803, 804, 805, 806, 807, 808, 812, 821, 822, and 823.

(c) The period for graduated compliance shall begin with the earlier of either the date the title to the property was transferred by, or the date a lease is entered into with, the federal government to the local agency.

(d) The authority for a local agency to adopt an ordinance pursuant to this section is an alternative to the authority provided by Section 18941.7, and shall not be used consecutively with Section 18941.7.

(e) An ordinance adopted by a local agency pursuant to subdivision (a) shall not apply to a building or other structure that will be used as a residence.

(f) Prior to the adoption of the ordinance pursuant to subdivision (a), each of the following conditions shall be met:

(1) The use of the building or other structure is not hazardous to life safety, fire safety, health, or sanitation, as determined by the application of state and local building and fire codes and standards by the local building official and fire marshal.

(2) The building or other structure has been transferred by the federal government to the local agency or is under a lease between the local agency and the federal government.

(3) The governing body of the local agency adopts a graduated compliance plan, which includes all of the following:

(A) Requirements for buildings and structures with:

(i) No change in occupancy or use with no anticipated alterations.

(ii) No change in occupancy or use with planned alterations.

(iii) Change in occupancy or use with no anticipated alterations.

(iv) Change in occupancy or use with planned alterations.

(B) Requirements for a building and structure compliance inspection and a fire department inspection, and for preparation of inspection reports, prior to issuing a certificate of occupancy.

(C) Requirements for the inspection reports prepared pursuant to subparagraph (B) to be attached to the certificate of occupancy or provided to the occupants of the building or other structure.

(D) Requirements for the terms and period of time for compliance to be specified in the certificate of occupancy.

(E) Requirements that the alterations conform to the standards that were in effect at the time of the alteration.

(g) **(1)** Before adopting the graduated compliance plan, the local agency shall arrange for the review of the draft plan by an engineer, architect, or building inspector. The engineer or architect shall be licensed by the State of California, and the building inspector shall be certified by the International Conference of Building Officials or another similar recognized state, national, or international association. The engineer, architect, or building inspector shall not be an employee of the local agency.

(2) The engineer, architect, or building inspector shall review the draft plan for its consistency with the requirements of this section, and report his or her written findings and recommendations to the local agency. If the engineer, architect, or building inspector finds that the draft plan is not consistent with the requirements of this section, the engineer, architect, or building inspector shall recommend changes to the draft plan to achieve consistency.

(3) The local agency shall consider the findings and recommendations of the engineer, architect, or building inspector. If the engineer, architect, or building inspector finds that the draft plan is not consistent with the requirements of this section, the local agency shall take one of the following actions:

(A) Change the draft plan to be consistent with the requirements of this section, as recommended by the engineer, architect, or building inspector.

(B) Adopt the draft plan with some of the recommended changes or without changes, provided that the local agency makes written findings that explain the reasons why the local agency believes that the draft plan, as adopted, is consistent with the requirements of this section despite the findings and recommendations of the engineer, architect, or building inspector which were not adopted by the local agency.

(4) The local agency shall file a copy of the approved graduated compliance plan with the California Building Standards Commission.

(h) **(1)** Five years after the beginning of the period for graduated compliance specified in subdivision (b), the local agency shall arrange for an engineer, architect, or building inspector to determine whether the buildings or other structures adhere to the graduated compliance plan. The engineer or architect shall be licensed by the State of California and the building inspector shall be certified by the International Conference of Building Officials or another similar recognized state, national, or international association. The engineer, architect, or building inspector shall not be an employee of the local agency.

(2) If the engineer, architect, or building inspector determines that the building or other structure does not adhere to the graduated compliance plan, the local building official shall initiate appropriate proceedings to withdraw the certificate of occupancy for that building or structure.

(i) Nothing in this section affects the requirement of state consent to retrocession pursuant to Section 113 of the Government Code.

(j) As used in this section, "local agency" means a city, county, or city and county. When authorized by state law or local ordinance to adopt and administer building and fire safety codes and standards, a community redevelopment agency, a reuse entity, or a joint powers agency may also be a "local agency" for the purposes of this section.

(k) Any taxpayer, property owner, resident, or public agency has standing to enforce the provisions of this section.

(l) Nothing in this section shall affect local, state, or federal laws as they relate to access to the disabled.

(m) This section shall remain in effect only until January 1, 2007, and as of that date is repealed, unless a later enacted statute, that is enacted before January 1, 2007, deletes or extends that date.

(Added by Stats.1997, c. 645 (A.B.1071), §15; Amended by Stats.2001, c. 418 (A.B.967), §1)

§18942 Publication; supplements; emergency standards; availability and possession of code

(a) The commission shall publish, or cause to be published, editions of the code in its entirety once in every three years. In each intervening year the commission shall publish, or cause to be published, supplements as necessary. For emergency building standards defined in subdivision (a) of Section 18913, an emergency building standards supplement shall be published whenever the commission determines it is necessary.

(b) The commission shall publish the text of Article 2.5 (commencing with Section 115920) of Chapter 5 of Part 10 of Division 104, within the California Code of Regulations, Title 24, Part 2 requirements for single-family residential occupancies, with the following note: "NOTE: These regulations are subject to local government modification. You should verify the applicable local government requirements at the time of application for a building permit."

(c) The commission may publish, stockpile, and sell at a reasonable price the code and any materials incorporated therein by reference if it deems the latter is insufficiently available to the public, or unavailable at a reasonable price. Each state department concerned and each city, county, or city and county shall have an up-to-date copy of the code available for public inspection.

(d) **(1)** Each city, county, and city and county, including charter cities, shall obtain and maintain with all revisions on a current basis, at least one copy of the building standards and other state regulations relating to buildings published in Titles 8, 19, 20, 24, and 25 of the California Code of Regulations. These codes shall be maintained in the office of the building official responsible for the administration and enforcement of this part.

(2) This subdivision shall not apply to any city or county which contracts for the administration and enforcement of the provisions of this part with another local government agency, which complies with this section.

(Added by Stats.1979, c. 1152, p.4292, §163. Amended by Stats.1979, c. 1152, p. 4326, §238, operative July 1, 1980; Stats.1981, c. 817, p. 3167, §6; Stats.1983, c. 142, §69; Stats.1987, c. 1053, §23; Stats.1988, c. 1194, §25, operative Jan. 1, 1989; Stats. 1989, c. 952, §6; Amended by Stats.1992, c. 897 (A.B.3515), §34; Stats.1996, c. 925 (A.B.3305), §3.)

§18942.1 Filing of regulations or orders of repeal; transmittal

(a) If a regulation or order of repeal is filed with the Office of Administrative Law, and if it appears to be a building standard, as defined by Section 18909, which has not been approved by the commission, the Office of Administrative Law shall consult with the commission or the commission's staff to determine the character and status of the filed regulation or order. Any building standard improperly transmitted to the Office of Administrative Law, as determined according to this section, shall not be then filed with the Secretary of State, but, instead, the Office of Administrative Law shall transmit the building standard to the commission and notify the adopting agency of this action.

(b) If an administrative regulation or order of repeal is filed with the commission and it does not directly apply to the implementation or enforcement of a building standard, it shall not be submitted to the commission for action, but, instead, the commission shall transmit the regulations to the Office of Administrative Law and notify the submitting agency of this action.

(Added by Stats.1981, c. 1003, p. 3877, §5. Amended by Stats. 1988, c. 1194, §26, operative Jan. 1, 1989; Amended by Stats.1992, c. 897 (A.B. 3515), §35.)

§18943 Effect of standards in individual titles

(a) Building standards in individual titles of the California Code of Regulations other than the California Building Standards Code shall have no force nor effect after January 1, 1985.

(Added by Stats.1979, c.1152, p.4292, §163. Amended by Stats.1981, c. 817, p. 3168, §7; Stats.1987, c. 1053, §24; Stats.1988, c. 1194, §28, operative Jan. 1, 1989; Amended by Stats.1992, c.897 (A.B.3515), §37.)

§18944 References to code in agency regulations

State agencies shall adopt regulations for publication in the titles of the California Code of Regulations containing other regulations of the agency to identify, by reference, the appropriate sections of the California Building Standards Code containing those building standards for which that agency has enforcement responsibility.

(Added by Stats.1979, c. 1152, p. 4292, §163; Amended by Stats.1987, c. 1053, §25; Stats.1988, c.1194, §29, operative Jan. 1, 1989; Amended by Stats.1992, c. 897 (A.B. 3515, §38.)

§18944.5 Agencies bound by code

The code shall be binding on the state and other public agencies, including federal agencies to the extent permitted by federal law, in the same manner as it binds private parties or entities.

(Added by Stats.1979, c.1152, p.4292, §163.)

§18944.7 State historical building code; alternative regulations and standards; maintenance as separate and distinct part or portion

The alternative building regulations and building standards authorized under the State Historical Building Code (Part 2.7 (commencing with Section 18950) of Division 13), which have been published in Part, 8 of the California Building Standards Code shall be maintained as a separate and distinct part or portion of the California Building Standards Code pursuant to that title.

(Added by Stats.1982, c. 1417, §1. Amended by Stats.1988, c. 1194, §30, operative Jan. 1, 1989.)

§18945 Right to appeal

(a) Any person adversely affected by any regulation, rules, omission, interpretation, decision, or practice of any state agency respecting the administration of any building standard may appeal the issue for resolution to the commission.

(b) If any local agency having authority to enforce a state building standard and any person adversely affected by any regulation, rule, omission, interpretation, decision, or practice of such agency respecting such building standard both wish to appeal the issue for resolution to the commission, then both parties may appeal to the commission. The commission may accept such appeal only if the commission determines that the issues involved in such appeal have statewide significance.

(Added by Stats.1979, c.1152, p.4292, §163.)

§18946 Hearing; reference; decision

Except as provided in Section 18947, the commission may hear the appeal itself, or by designating a member of the commission to be a hearing officer, or may refer the appealing parties to an advisory panel, a committee, or to a hearing officer appointed by the Office of Administrative Hearings, wherein the hearing officer designated by the commission or appointed by the Office of Administrative Hearings, should, where possible, possess some expertise in the technical aspects of the appeal. If a referral is made, the panel, committee, or hearing officer may make an investigation and conduct hearings as they deem appropriate, provided that all interested agencies or parties shall have a full and fair opportunity to be heard. A proposed written decision shall be submitted to the commission, which the commission may adopt, adopt as modified, or reject. The commission shall render its decision or interpretation in writing.

(Added by Stats.1979, c. 1152, p. 4292, §163. Amended by Stats.1981, c. 1003, p. 3877, §6.)

§18947 Appeal to occupational safety and health appeals board

Where the appeal issue results from the enforcement of a standard for occupational safety and health by an inspector of the Division of Occupational Safety and Health of the Department of Industrial Relations, the

employer shall appeal directly to the Occupational Safety and Health Appeals Board, and the appeal shall be conducted pursuant to the provisions of Chapter 7 (commencing with Section 6600) of Part 1 of Division 5 of the Labor Code. Such an appeal, if sent to the commission in error, shall be forwarded immediately to the Occupational Safety and Health Appeals Board. The date of receipt of any such appeal by the commission shall be considered the date of filing for purposes of meeting the filing time requirements of Section 6600 of the Labor Code.

(Added by Stats.1979, c. 1152, p. 4292, §163.)

§18948 Responsibility for enforcement and administration
The responsibility for the enforcement and administration of building standards shall remain in the state or local agency specified by other provisions of law.

(Added by Stats.1979, c. 1152, p.4292, §163.)

§18949 Fee Schedule
The commission shall establish a schedule of fees for appeals in an amount sufficient to pay its costs of administration and hearing appeals.

(Added by Stats.1981, c. 1082, p. 4174, §3.)

§18949.1 State architect, transfer of responsibilities to commission
Any responsibilities of the State Architect to adopt regulations relating to building standards are hereby transferred to the commission.

(Added by Stats.1991, c. 865 (A.B.47), §24.)

§18949.2 State Fire Marshal; formal rule making process; transfer of duties to commission; fire and life safety standards; development; review; modification
(a) Any responsibilities of the State Fire Marshal to adopt, through a formal rulemaking process as provided in Chapter 3.5 (commencing with Section 11340) of Part 1 of Division 3 of Title 2 of the Government Code, relating to building standards, including, but not limited to, Sections 13108, 13143, 13143.6, and 13211, are hereby transferred to the commission.

(b) The State Fire Marshal shall remain the state agency responsible for developing building standards to implement the state's fire and life safety policy. In its role as the fire and life safety standard developing agency, the State Fire Marshal shall continue its existing activities and forums designed to facilitate compromise and consensus among the various individuals and groups involved in development of the state's codes related to fire and life safety.

(c) The state's fire and life safety building standards, as developed by the State Fire Marshal and as adopted by the commission, shall continue to be based on the state's fire and life safety policy goals and mandates as they existed prior to the enactment of this chapter and as they are amended.

(d) The role of the commission in reviewing and adopting fire and life safety building standards shall be strictly limited to a technical review of those standards, through a process integrated with the technical review of all other state building standards, and a determination as to whether those standards conform to the requirements of Section 18930 commonly known as the "nine point criteria."

(e) The commission may not rewrite or modify any fire or life safety building standard without the express mutual agreement of the State Fire Marshal. If the State Fire Marshal does not agree with the modification of a fire or life safety building standard as proposed by the commission, the authority of the commission shall be limited to disapproval of the standard, pursuant to the "nine point criteria" in Section 18930.

(Added by Stats.1991, c. 865 (A.B.47), §24.)

§18949.3 Office of Statewide Health Planning and Development; transfer of duties to commission
Any responsibilities of the Office of Statewide Health Planning and Development to adopt regulations relating to

building standards, including, but not limited to, responsibilities specified in Division 12.5 (commencing with Section 15000), are hereby transferred to the commission.

(Added by Stats.1991, c. 865 (A.B.47), §24.)

§18949.4 State Energy Resources Conservation and Development Commission; submission of standards for review and approval; time schedule

The State Energy Resources Conservation and Development Commission shall submit building standards to the commission for review and approval pursuant to Section 18930 in accordance with the time schedule established by the State Building Standards Commission.

(Added by Stats.1991, c. 865 (A.B.47), §24.)

§18949.5 Department of Housing and Community Development; transfer of duties to commission

Any responsibilities of the Department of Housing and Community Development to adopt regulations relating to buildings standards are hereby transferred to the commission.

(Added by Stats.1991, c. 865 (A.B.47), §24.)

§18949.6 Procedure for adoption of standards and administrative regulations

(a) The commission shall adopt regulations setting forth the procedure for the adoption of building standards and administrative regulations that apply directly to the implementation or enforcement of building standards.

(b) Regulatory adoption shall be accomplished so as to facilitate the triennial adoption of the specified model codes pursuant to Section 18928.

(c) The regulations shall allow for the distribution of proposed building standards and regulatory changes to the public for review in compliance with the requirements of the rulemaking provisions of the Administrative Procedure Act (Chapter 3.5 (commencing with Section 11340) of Part 1 of Division 3 of Title 2 of the Government Code) and for the acceptance of responses from the public.

(d) With regard to proposed residential building standards, the Trade and Commerce Agency shall provide, if requested, by the commission, an economic review of the housing cost impact statement or related study submitted by the code change proponent pursuant to Section 11346.5 of the Government Code.

(Added by Stats.1991, c. 865 (A.B.47), §24; Amended by Stats.1993, c. 56 (A.B.2351), §27; Stats.1995, c. 938 (S.B.523), §65.8, operative July 1, 1997; Stats.1998, c. 426 (A.B.2697), §1, eff. Sept. 11, 1998.)

§18949.25 Construction inspector

For purposes of this chapter, "construction inspector" means any person who is hired or contracted by a local agency in a temporary or permanent capacity for the purpose of inspecting construction for structural, seismic safety, fire and life safety, or building system requirements of adopted uniform codes or standards, as applied to residential, commercial, or industrial buildings.

(Formerly §18965, added by Stats.1995, c. 623 (A.B. 717), §1. Renumbered §18949.25 and amended by Stats.1996, c. 124 (A.B.3470), §60.)

§18949.26 Plans examiner

For purposes of this chapter, "plans examiner" means any person who is hired or contracted by a local agency in a temporary or permanent capacity for the purpose of performing construction plan review for structural, seismic safety, fire and life safety, or building system requirements of adopted uniform codes or standards, as applied to residential, commercial, or industrial buildings.

(Formerly §18966, added by Stats.1995, c. 623 (A.B.717), §1. Renumbered §18949.26 and amended by Stats.1996, c. 124 (A.B.3470), §61.)

§18949.27 Building Official

For purposes of this chapter, "building official" means the individual invested with the responsibility for overseeing local code enforcement activities, including administration of the building department, interpretation of code requirements, and direction of the code adoption process.

(Formerly. §18967, added by Stats. 1995, c.623 (A.B.717), §1. Renumbered §18949.27 and amended by Stats.1996, c.124 (A.B.3470), §62.)

§18949.28 Experience and certification requirements; exemptions

(a) All construction inspectors, plans examiners and building officials who are not exempt from the requirements of this chapter pursuant to subdivision (b), or previously certified, shall complete one year of verifiable experience in the appropriate field, and shall, within one year thereafter, obtain certification from a recognized state, national, or international association, as determined by the local agency. The area of certification shall be closely related to the primary job function, as determined by the local agency.

(b) Any person who is currently and has continuously been employed as a construction inspector, plans examiner, or building official for not less than two years prior to the effective date of this section shall be exempt from the certification provisions of this section, unless and until that person obtains employment as a construction inspector, plans examiner, or building official with a different employer.

(c) Nothing in this article is intended to prohibit a local agency from prescribing additional criteria for the certification of construction inspectors, plans examiners, or building officials.

(d) Nothing in this chapter, as it relates to construction inspectors, plans examiners, or building officials, shall be construed to alter the requirements for licensure, or the jurisdiction, authority, or scope of practice, of architects pursuant to Chapter 3 (commencing with Section 5500) of Division 3 of the Business and Professions Code, professional engineers pursuant to Chapter 7 (commencing with Section 6700) of Division 3 of the Business and Professions Code, or land surveyors pursuant to Chapter 15 (commencing with Section 8700) of Division 3 of the Business and Professions Code.

(Formerly §18968, added by Stats.1995, c. 623 (A.B.717), §1. Renumbered §18949.28 and amended by Stats.1996, c. 124 (A.B.3470), §63.)

§18949.29 Continuing Education

All construction inspectors, plans examiners, and building officials shall complete a minimum of 45 hours of continuing education for every three-year period.

(a) Providers of continuing education may include any organizations affiliated with the code enforcement profession, community colleges, or other providers of similar quality, as determined by the local agency.

(b) For purposes of this section, "continuing education" is defined as that education relating to the enforcement of Title 24 of the California Code of Regulations, and any other locally enforced building and construction standards, including, but not limited to, the model uniform codes adopted by the state. When a local agency selects a model code organization as a provider of continuing education or certification programs regarding the enforcement of a model code adopted by the state, the local agency shall give preference to the organization responsible for promulgating or drafting that model code.

(Formerly §18969, added by Stats.1995, c. 623 (A.B.717), §1. Renumbered §18949.29 and amended by Stats.1996, c. 124 (A.B.3470), §64.)

§18949.30 Application of chapter

This chapter does not apply to a registered professional engineer, licensed land surveyor, or licensed architect rendering construction inspection services, plan examination services, or building official services within the scope of his or her registration or licensure, except that this chapter applies to a registered professional engineer, licensed land surveyor, or licensed architect who is an employee of a local agency. This chapter does not apply

to a construction inspector or plans examiner employed by any city or county fire department or district providing fire protection services.

(Formerly §18970, added by Stats.1995, c. 623 (A.B.717), §1. Renumbered §18949.30 and amended by Stats.1996, c. 124 (A.B.3470), §65.)

§18949.31 Local agencies; costs and fees

The local agency shall bear the costs of certification, certification renewal, and continuing education, as mandated by this chapter. The local agency may impose fees, including, but not limited to, fees for construction inspection and plan checks, which may be used to cover the costs of compliance with this chapter. A local agency's actual costs of compliance with this chapter may include, but are not limited to, training and certification courses, certification exam and renewal fees, employee salary during training and certification courses, and mileage and other reimbursable costs incurred by the employee. The fees imposed to cover the costs of compliance with this chapter shall reflect these actual costs, and are not limited by Chapter 5 of Division 1 of Title 7.

(Formerly §18971, added by Stats.1995, c. 623 (A.B.717), §1. Renumbered §18949.31 and amended by Stats.1996, c. 124 (A.B.3470), §66.)

10. FACTORY BUILT HOUSING

Health and Safety Code

§19960	Short Title
§19961	Legislative Findings
§19965	Construction of part
§19966	Approved
§19967	Building Component
§19967.1	Building system
§19967.2	Building standard
§19969	Department
§19969.3	Design Approval Agency
§19970	Dwelling unit
§19971	Factory-built housing
§19972	First user
§19974	Installation
§19975	Local enforcement agency
§19975.1	Local inspection agency
§19976	Manufacture
§19976.05	Quality assurance agency
§19976.1	Residential Building
§19977	Site
§19980	Factory-built housing; insignia of approval
§19981	Presumption of compliance of approve factory-built housing with local ordinances and regulations; prohibition against modification without approval
§19982	Schedule of fees; disposition and appropriation of fees; reductions in schedule
§19983	Delegating enforcement authority to local government agencies; approving design approval agencies
§19984	Law governing adoption of building standards and rules and regulations
§19985	Approval of factory-built housing manufactured in accordance with standards of another state
§19990	Adoption of rules and regulations and building standards
§19990.6	Foam building systems; laws, standards and regulations
§19991	Enforcement by department
§19991.1	In-plant inspections by local agencies; certification; fees
§19991.2	In-plant inspections by department
§19991.3	Design approval agencies; regulations for qualification and disqualification
§19991.4	Qualification and disqualification of quality assurance
§19992	Installation of factory-built housing; enforcement and inspection by local agencies; fees
§19993	Zoning, load and pressure requirements reserved to local jurisdictions; factory-built housing
§19995	Hearing by department
§19996	Rules and regulations
§19997	Violation; misdemeanor

§19960 Short Title

This part shall be known and may be cited as the "California Factory-Built Housing Law."

(Added by Stats. 1969, c. 1422, p. 2913, §2.)

§19961 Legislative Findings

The Legislature hereby finds and declares that in an effort to meet the housing needs within the State of California, the private housing and construction industry has developed mass production techniques which can substantially reduce housing construction costs, and that the mass production of housing, consisting primarily of factory manufacture of dwelling units or habitable rooms thereof, presents unique problems with respect to the

establishment of uniform health and safety standards and inspection procedures. The Legislature further finds and declares that by minimizing the problems of standards and inspection procedures, it is demonstrating its intention to encourage the reduction of housing construction costs and to make housing and home ownership more feasible for all residents of the state.

(Added by Stats. 1969, c. 1422, p. 2913, § 2.)

§19965 Construction of part
The definitions contained in this chapter govern the construction of this part, unless the context otherwise requires.

(Added by Stats. 1969, c. 1422, p. 2913, § 2.)

§19966 Approved
"Approved" means conforming to the requirements, and obtaining the approval, of the Department of Housing and Community Development of the State of California.

(Added by Stats. 1969, c. 1422, p. 2913, § 2.)

§19967 Building Component
"Building component" means any subsystem, subassembly, or other system designed for use in, or as part of, a structure, which may include structural, electrical, mechanical, plumbing, and fire protection systems and other systems affecting health and safety. However, "building component" does not include appliances or equipment, such as heaters, stoves, refrigerators, or air conditioners, which have been listed and labeled by an approved testing and listing agency.

(Added by Stats. 1974, c. 129, p. 262, § 2, eff. April 2, 1974.)

§19967.1 Building system
"Building system" means plans, specifications, and documentation for a system of manufactured building, or for a type or a system of building components, which may include structural, electrical, mechanical, plumbing, and fire protection systems and other systems affecting health and safety, including variations which are submitted as part of the building system.

(Added by Stats. 1974, c. 129, p. 262, § 3, eff. April 2, 1974.)

§19967.2 Building standard
"Building standard" means building standard as defined in Section 18909.

(Added by Stats. 1979, c. 1152, p. 4306, § 173.)

§19969 Department
"Department" means the Department of Housing and Community Development of the State of California.

(Added by Stats. 1969, c. 1422, p. 2913, § 2.)

§19969.3 Design Approval Agency
"Design approval agency" is a private organization meeting the requirements of department regulations to perform evaluation of factory-built housing plans and specifications.

(Added by Stats. 1984, c. 1422, p. 2913, § 2.)

§19970 Dwelling unit
"Dwelling unit" means one or more habitable rooms which are occupied or which are intended or designed to be occupied by one family with facilities for living, sleeping, cooking and eating.

(Added by Stats. 1969, c. 1422, p. 2913.)

§19971 Factory-built housing

"Factory-built housing" means a residential building, dwelling unit, or an individual dwelling room or combination of rooms thereof, or building component, assembly, or system manufactured in such a manner that all concealed parts or processes of manufacture cannot be inspected before installation at the building site without disassembly, damage, or destruction of the part, including units designed for use as part of an institution for resident or patient care, which is either wholly manufactured or is in substantial part manufactured at an offsite location to be wholly or partially assembled onsite in accordance with building standards published in the State Building Standards Code and other regulations adopted by the commission pursuant to Section 19990. Factory-built housing does not include a mobilehome, as defined in Section 18008, mobile accessory building or structure, as defined in Section 18010, a recreational vehicle, as defined in Section 18010.5, or a commercial coach, as defined in Section 18012.

(Added by Stats. 1969, c. 1422, p. 2913, § 2. Amended by Stats. 1970, c. 774, p. 1461, § 1; Stats. 1974, c. 129, p. 263, § 4, eff. April 2, 1974; Stats. 1979, c. 1152, p. 4306, §174.)

§19972 First user

"First user" means the person, firm, or corporation who initially installs factory-built housing within this state. A person who subsequently purchases a building which wholly or partially consists of factory-built housing is not a first user within the meaning of this definition.

(Added by Stats. 1969, c. 1422, p. 2913, § 2.)

§19974 Installation

“Installation" means the assembly of factory-built housing on site and the process of affixing factory-built housing to land, a foundation, footings or an existing building.

(Added by Stats. 1969, c. 1422, p. 2913, § 2.)

§19975 Local enforcement agency

"Local enforcement agency" means the city, county, or city and county in which factory-built housing is installed.

(Added by Stats. 1969, c. 1422, p. 2913, § 2.)

§19975.1 Local inspection agency

"Local inspection agency" means the building department of a city, county, or city and county, which has been certified by the department, and which has assumed responsibility for inspection of in-plant construction as provided by Section 19991.1.

(Added by Stats. 1974, c. 129, p. 263, § 5, eff. April 2, 1974.)

§19976 Manufacture

"Manufacture" is the process of making, fabricating, constructing, forming, or assembling a product from raw, unfinished, or semifinished materials.

(Added by Stats. 1969, c. 1422, p. 2913, § 2.)

§19976.05 Quality assurance agency

"Quality assurance agency" means a private organization meeting the requirements specified in regulations of the department to perform in-plant inspections of the construction of factory-built housing.

(Added by Stats. 1987, c. 1422, p. 2913, § 2.)

§19976.1 Residential Building

"Residential building" means any structure designed for dwelling occupancy, containing one or more dwelling units and structures accessory thereto.

(Added by Stats. 1974, c. 129, p. 263, § 6, eff. April 2, 1974.)

§19977 Site
"Site" is the entire tract, subdivision or parcel of land on which factory-built housing is installed.

(Added by Stats. 1969, c. 1422, p. 2913, § 2.)

§19980 Factory-built housing; insignia of approval
All factory-built housing manufactured after the effective date of the building standards published in the State Building Standards Code and the other regulations adopted pursuant to Chapter 4 (commencing with Section 19990) of this part, which is sold or offered for sale to first users within this state, shall bear insignia of approval issued by the department.

(Added by Stats. 1969, c. 1422, p. 2913, § 2. Amended by Stats. 1974, c. 129, p. 263, § 7, eff. April 2, 1974; Stats. 1979, c. 1152, p. 4307, § 175.)

§19981 Presumption of compliance of approve factory-built housing with local ordinances and regulations; prohibition against modification without approval
(a) All factory-built housing bearing an insignia of approval pursuant to Section 19980 shall be deemed to comply with the requirements of all ordinances or regulations enacted by any city, city and county, county, or district which may be applicable to the construction of housing. No city, city and county, county, or district shall require submittal of plans for any factory-built housing manufactured, or to be manufactured, pursuant to this part for the purpose of determining compliance with this part or the regulations promulgated thereunder, or for determining compliance with any local construction requirement, except as provided in Section 19993.

(b) No factory-built housing bearing a department insignia of approval pursuant to Section 19980 shall be in any way modified prior to installation unless approval is first obtained from the department.

(c) No factory-built housing shall be in any way modified during installation unless approval for the modification is first obtained from the local enforcement agency.

(Amended by Stats. 1993, c. 413 (A.B.765), § 6, eff. Sept. 21, 1993.)

§19982 Schedule of fees; disposition and appropriation of fees; reductions in schedule
(a) The department by rule and regulation shall establish a schedule of fees to pay the costs incurred by the department for the work related to administration and enforcement of this part. Notwithstanding Section 13340 of the Government Code, the fees collected shall be placed in the Mobilehome-Manufactured Home Revolving Fund established by Section 18016.5, and are continuously appropriated to the department for expenditure in carrying out the provisions of this part.

(b) The total money collect pursuant to this part and contained in the Mobilehome-Manufactured Home Revolving Fund on June 30 of each fiscal year shall not exceed the amount needed for operating expenses for one year for the enforcement of this part. If the total money collected pursuant to this part in the fund exceeds this amount, the department shall make appropriate reductions in the schedule of fees authorized by this section.

(Added by Stats. 1969, c. 1422, p. 2913, § 2. Amended by Stats. 1983, c. 706, § 3, eff. Sept. 11, 1983.)

§19983 Delegating enforcement authority to local government agencies; approving design approval agencies
Nothing in this part shall be construed to prevent the department from delegating by written contract its enforcement authority to local government agencies or from approving design approval agencies, as provided in Section 19991.3.

(Added by Stats. 1969, c. 1422, p. 2913, § 2. Amended by Stats. 1984, c. 304, §2)

§19984 Law governing adoption of building standards and rules and regulations
All building standards shall be adopted and published in the State Building Standards Code pursuant to Part 2.5 (commencing with Section 18901) of this division, and all other rules and regulations promulgated by the

commission under the authority of this part shall be adopted pursuant to Chapter 3.5 (commencing with Section 11340) of Part 1 of Division 3 of Title 2 of the Government Code.

(Added by Stats. 1969, c. 1422, p. 2913, § 2. Amended by Stats. 1979, c. 1152, p. 4307, § 176; Stats. 1980, c. 676, p. 1952, § 170.)

§19985 Approval of factory-built housing manufactured in accordance with standards of another state
If the department determines that standards for the construction of factory-built housing, which have been prescribed by the statutes or rules and regulations of other states, are at least equal to the standards of the State Building Standards Code and the other requirements prescribed by the department, the department may so provide by regulation. Any factory-built housing which a state has approved as meeting its standards for construction shall be deemed to meet the requirements of the department, if the department determines that the standards of that other state are actually being enforced.

(Added by Stats. 1970, c. 774, p. 1461, § 3. Amended by Stats. 1974, c. 129, p. 263, § 9; eff. April2, 1974; Stats. 1979, c. 1152, p. 4307, § 177; Stats. 1987, c. 891, § 15.))

§19990 Adoption of rules and regulations and building standards
(a) Except as provided in Section 18930, the department shall adopt rules and regulations to interpret and make specific this part. The department shall adopt and submit building standards for approval pursuant to Chapter 4 (commencing with Section 18935) of Part 2.5 of this division for the purposes described in this section. Standards adopted, amended, or repealed from time to time by the department pursuant to this chapter shall include provisions imposing requirements reasonably consistent with recognized and accepted standards contained in the most recent editions of the following uniform industry codes as adopted or amended from time to time by the organizations specified:

(1) The Uniform Housing Code of the International Conference of Building Officials.

(2) The Uniform Building Code of the International Conference of Building Officials.

(3) The Uniform Plumbing Code of the International Association of Plumbing and Mechanical Officials.

(4) The Uniform Mechanical Code of the International Conference of Building Officials and the International Association of Plumbing and Mechanical Officials.

(5) The National Electrical Code of the National Fire Protection Association.

(b) The department shall require every city and county to file with the department all wind pressure and snow load requirements in effect within their respective jurisdictions if these requirements differ from building standards published in the State Building Standards Code, on or before January 1 of each year. The department shall notify every manufacturer of factory-built housing of these requirements on or before March 1 of each year.

(c) Except as provided in Section 18930, the department shall adopt other rules and regulations as it deems necessary to carry out this part. In promulgating these other rules and regulations the department shall consider any amendments to the uniform codes referred to in this section. In the event of any conflict with respect to factory-built housing between Part 1.5 (commencing with Section 17910) and this part, the requirements of this part shall control.

(Added by Stats. 1969, c. 1422, p. 2913, § 2. Amended by Stats. 1974, c. 129, p. 264, § 10, eff. April 2, 1974; Stats. 1979, c. 1152, p. 4307, § 178; Stats. 1987, c. 891, § 16.)

§19990.6 Foam building systems; laws, standards and regulations
The provisions of Section 17920.9, the building standards published in the State Building Standards Code relating to foam building systems, and the other rules and regulations adopted pursuant to Section 17920.9, shall be applicable to the sale, offering for sale, or use in the construction of any factory-built housing of any foam building system, and to any factory-built housing in which any such system is used as a component.

(Formerly § 19940.5, added by Stats. 1973, c. 964, p. 1855, § 3. Renumbered § 19990.5 and amended by Stats. 1979, c. 373, p. 1337, § 194; Stats. 1979, c. 1152, § 172. Renumbered § 19990.6 and amended by Stats. 1983, c. 101, § 135.)

§19991 Enforcement by department

The department shall enforce every provision of this part, the building standards published in the State Building Standards Code relating to factory-built housing, and the other regulations adopted pursuant to this part, except as provided in Sections 19991.1, 19991.3, 19991.4, and 19992.

(Added by Stats. 1969, c. 1422, p. 2913, § 2. Amended by Stats. 1974, c. 129, p. 264, § 11, eff. April 2, 1974; Stats. 1979, c. 1152, p. 4308, § 179; Stats. 1984, c. 304, § 3; Stats. 1987, c. 891, § 17.)

§19991.1 In-plant inspections by local agencies; certification; fees

The governing body of any city, county, or city and county may by ordinance elect to have its building department assume responsibility, for in-plant inspections of all factory-built housing in all places of manufacture within the political limits of the jurisdiction of such city, county, or city and county. If certified by the department as qualified to perform such inspections, the building department shall be the local inspection agency within the city, county, or city and county. The governing body of any city, county, or city and county having a local inspection agency may, by ordinance, establish a reasonable inspection fee for in-plant inspections to defray the actual cost of inspections.

(Added by Stats. 1974, c. 129, p. 265, § 12, eff. April 2, 1974.)

§19991.2 In-plant inspections by department

Where there is no certified local inspection agency, the department shall make in-plant inspection of all factory-built housing in all places of manufacture located within the political limits of the jurisdiction in which such manufacturing plants are located.

(Added by Stats. 1974, c. 129, p. 265, § 13, eff. April 2, 1974.)

§19991.3 Design approval agencies; regulations for qualification and disqualification

The department shall provide by regulation for qualification and disqualification of design approval agencies to perform approval of factory-built housing plans and specifications, and the approvals of those agencies shall be deemed the equivalent of department approval. The regulations for qualification of design approval agencies shall specifically provide for the absence of any conflict of interest between manufacturers and design approval agencies and for department oversight of design approval agency performance.

(Added by Stats. 1984, c. 304, § 4.)

§19991.4 Qualification and disqualification of quality assurance

The department may provide by regulation for the qualification and disqualification of quality assurance agencies to perform inspections of factory-built housing manufacturers. Quality assurance agencies shall act on behalf and subject to the supervision of the department and shall exercise the powers of the department with respect to these inspections, as provided by regulations of the department. These regulations shall specifically provide for the absence of any conflict of interest between manufacturers and quality assurance agencies and for department oversight of the performance quality assurance agencies.

(Added by Stats. 1987, c. 891, § 18.)

§19992 Installation of factory-built housing; enforcement and inspection by local agencies; fees

Local enforcement agencies shall enforce and inspect the installation of factory-built housing. The installation of factory-built housing shall be conducted in accordance with the requirements of the building standards published in the State Building Standards Code relating to factory-built housing and the other requirements of Part 1.5 (commencing with Section 17910), subject to the provisions of Section 19990. The local enforcement agency may, by ordinance, establish an inspection fee for the inspection of the installation of factory-built housing.

(Added to Stats. 1969, c. 1422, p. 2913, § 2. Amended by Stats. 1974, c. 129, p. 265, § 14, eff. April 2, 1974; Stats. 1979, c. 1152, p. 4308, § 180.)

§19993 Zoning, load and pressure requirements reserved to local jurisdictions; factory-built housing

(a) Local use zone requirements, local snow load requirements, local wind pressure requirements, local fire zones, building setback, side and rear yard requirements, site development and property line requirements, as

well as the review and regulation of architectural and aesthetic requirements are hereby specifically and entirely reserved to local jurisdictions notwithstanding any requirement of this part.

(b) Local requirements imposed on factory-built housing pursuant to the authority granted by this section shall not vary substantially from the requirements imposed on other residential buildings of similar size.

(Amended by Stats. 1993, c. 413 (A.B.765), § 7, eff. Sept. 21, 1993.)

§19995 Hearing by department

Except as provided in Section 18945, the department shall hear appeals brought by any person regarding the application to such person of any building standard published in the State Building Standards Code relating to factory-built housing or to any other rule or regulation of the department promulgated pursuant to this part. Any such appeals shall first be submitted to the local enforcement agency, if any, delegated by the department to enforce the provisions of this part. The department shall not hear any appeal regarding any local ordinance, rule, or regulation related to the installation of factory-built housing.

(Added by Stats. 1969, c. 1422, p. 2913, § 2. Amended by Stats. 1979, c. 1152, p. 4309, § 181; Stats. 1987, c. 891, § 19.)

§19996 Rules and regulations

The commission may promulgate rules pertaining to the hearing of appeals under the provisions of this chapter.

(Added by Stats. 1969, c. 1422, p. 2913, § 2.)

§19997 Violation; misdemeanor

Any person who violates any of the provisions of this part, a building standard published in the State Building Standards Code relating to factory-built housing, or any other rules or regulations adopted pursuant to this part is guilty of a misdemeanor, punishable by a fine not exceeding one thousand dollars ($1,000) or by imprisonment not exceeding thirty (30) days, or by both such fine and imprisonment.

(Added by Stats. 1969, c. 1422, p. 2913, § 2. Amended by Stats. 1979, c. 1152, p. 4309, § 182; Stats. 1983, c. 1092, § 165, eff. Sept. 27, 1983, operative Jan. 1, 1984.)

11. Employee Housing Act

Health and Safety Code

§17000	Short title
§17000.1 to §17000.4	Repealed by Stats
§17001	Compliance with building standards and regulations; local standards
§17002	Use of material, appliance, etc., not prescribed by this part; approval of alternate; ordinances
§17003	Commission
§17003.5	Reference to commission of housing and community development deemed to be department of housing and community development; exercise of powers and duties
§17004	Department
§17005	Employee; exclusions
§17005.5	Employee community housing
§17006	Resident-employment housing
§17007	Enforcement agency
§17008	Employee housing
§17008.7	Repealed by Stats
§17009	Labor supply employee housing
§17009.5	Person
§17010	Temporary employee housing; seasonal employee housing; permanent employee housing; permanent single-family employee housing
§17011	Sleeping place
§17020	Supremacy over local ordinances or regulations; continuation of existing rules and regulations; duration of building standards
§17021	Reservations to local jurisdiction for local use zones. Fire zones, property lines, water supply and sewage disposal; exception for construction or improvement to agricultural employee housing; compliance with California Environmental Quality Act; recovery of costs incurred for review of application or permit denial
§17021.5	Single-family structure with residential land use designation; treatment of employee housing; definition
§17021.6	Agricultural land use designation; treatment of employee housing; definition
§17021.7	Mobilehomes and recreational vehicles used to house agricultural employees; maintenance required
§17022	Occupational safety and health standards; enforcement
§17022.5	Model or prototype plans for employee housing
§17023	Application of rules and regulations; duration of building standards
§17024	Housing for faculty or employees of schools, colleges, or universities
§17030	Permit required; exemptions; enforcement for railroad corporations
§17030.5	Permanent housing; duration of permit; findings
§17031	Permanent housing; exemption from annual permit requirement; procedure; conditions; findings; revocation
§17031.3	Permit for employee community housing; exemptions
§17031.4	Local enforcement agency; information to department
§17031.5	Employee Housing; termination or modification of tenancy; tenants' rights
§17031.6	Eviction proceedings; defenses; payment of reasonable monthly rental value to court in cases of delay or continuance
§17031.7	Retaliatory employment action
§17031.8	Local enforcement agency; submission of information; annual report
§17032	Applications; time; contents; amended permits
§17033	Railroad Corporations; permits to operate employee housing
§17034	Violations
§17035	Roster
§17036	Regulations; fees
§17037	Compliance with requirements; failure to obtain permit; penalty fees
§17037.5	Certificate of non-operation; submittal to enforcement agency; requirements

§17038	Compliance; appointment of responsible person; emergency telephone number
§17039	Compliance; maintenance and sanitation; application of violation provisions
§17040	Duties of department; enforcement of building standards; adoption and submission of building standards
§17041	Consistency with accepted standards and practices; fee schedule; waiver or reduction of fees
§17042	Building standards; restrictions on department
§17043	Overcrowding of accommodations; notice; proceedings; appeal; vacation of accommodations; alternative housing
§17050	Local enforcement; assumption of enforcement by department; powers of enforcement agency
§17051	Service of process or notice
§17052	Annual inspections; exceptions
§17053	Complaint and information file; public record; availability to local enforcement agencies; district attorneys, and attorney general
§17054	Attorney general; investigations; powers; prosecutions
§17055	Administrative complaint; civil action
§17056	Prosecution of serious violators; implementation of part; bilingual civil service employees; report
§17060	Nuisance; health or safety hazards; jurisdiction; service of summons; lis pendens; recordation
§17060.2	Orders or notices of violations; vacating of accommodations; relocation ordinances; attorney's fees and costs; deferral of orders of abatement
§17060.5	Transfer to third party; continuance of action or proceeding; subjection of new owner for correction

§17000 Short title

This part shall be known as the Employee Housing Act.

(Added by Stats. 1979, c. 62, p. 146, § 1, eff. May 14, 1979.)

§17000.1 to §17000.4 Repealed by Stats. 1961, c. 1844, p. 3919, § 7

§17001 Compliance with building standards and regulations; local standards

Buildings used for human habitation, and buildings accessory thereto, within employee housing shall comply with the building standards published in the State Building Standards Code relating to employee housing and with the other regulations adopted pursuant to this part, unless a local ordinance prescribing minimum standards adopted in accordance with Sections 17958.5 and 17958.7 which is equal to such regulations is applicable. Notwithstanding the provisions of Section 17050, if such a local ordinance is applicable to buildings used for human habitation, and buildings accessory thereto, within employee housing, these buildings shall comply with the construction and erection provisions of the ordinance.

(Amended by Stats. 1992, c. 1298 (A.B.3526), § 4.)

§17002 Use of material, appliance, etc., not prescribed by this part; approval of alternate; ordinances

The provisions of this part are not intended to prevent the use of any material, appliance, installation, device, arrangement, or method of construction not specifically prescribed by this part if such alternate has been approved by the Department of Housing and Community Development.

The Department of Housing and Community Development may approve any such alternate if it finds that the proposed design is satisfactory and that the material, appliance, installation, device, arrangement, or method of construction offered is, for the purpose intended, at least the equivalent of that prescribed in this part in quality, strength, effectiveness, fire resistance, durability and safety, for the protection of life and health.

This section shall not apply to a local ordinance which is applicable pursuant to Section 17001.

(Added by Stats. 1979, c. 62, p. 146, § 1, eff. May 14, 1979.)

§17003 Commission
"Commission," as used in this part, means the Commission of Housing and Community Development.

(Added by Stats. 1979, c. 62, p. 146, § 1, eff. May 14, 1979.)

§17003.5 Reference to commission of housing and community development deemed to be department of housing and community development; exercise of powers and duties
Any reference in this division to the Commission of Housing and Community Development shall be deemed to be to the Department of Housing and Community Development and the department may exercise all the powers and shall perform all the duties of the commission.

(Added by Stats. 1981, c. 996, p. 3840, § 1.)

§17004 Department
"Department," as used in this part, means the Department of Housing and Community Development.

(Added by Stats. 1979, c. 62, p. 146, § 1, eff. May 14, 1979)

§17005 Employee; exclusions
"Employee," as used in this part, does not include any of the following:

(a) A person engaged in household domestic service.

(b) A person employed under circumstances in which his wages are incidental to professional training and where the employer is exempt from taxation under subdivision (b) of Section 4 of Article XIII of the California Constitution.

(c) A person employed incidental to training for, or in furtherance of, a religious vocation and where the employer is exempt from taxation under subdivision (f) of Section 3 of Article XIII of the California Constitution.

(Added by Stats. 1979, c. 62, p. 146, § 1, eff. May 14, 1979.)

§17005.5 Employee community housing
(a) "Employee community housing" means a community of single family detached dwellings which meet all of the following requirements:

(1) Each dwelling has a minimum of four rooms, including a separate kitchen and a separate bathroom.

(2) Each dwelling is owned or operated by an employer, and maintained by such employer in compliance with the provisions of the State Housing Law, and the regulations adopted pursuant thereto, which materially affect health and safety.

(3) Each dwelling is inhabited by not more than one family, which includes at least one permanent year-round employee of the employer who owns or operates the dwelling.

(4) Each dwelling has direct access to a publicly owned and maintained road.

(5) Each dwelling is located within a community, as defined in subdivision (b).

(b) "Community" means not less than 200 single family detached dwellings meeting the requirements of subdivision (a), which are adjacent or in close proximity to each other, and which have maintenance services available to the residents of the dwelling units provided by persons employed by the employer for the express purpose of providing such services.

(Added by Stats. 1979, c. 1031, p. 3555, § 2.)

§17006 Resident-employment housing
"Resident-employment housing," as used in this part, means apartment houses, hotels, motels, or dwellings, where living quarters are provided for five or more employees employed in the management, maintenance, or operation of an apartment house, hotel, motel, or dwellings.

(Amended by Stats. 1992, c. 1298 (A.B.3526), § 5.

§17007 Enforcement agency
"Enforcement agency," as used in this part, means the Department of Housing and Community Development, or any city, county, or city and county which has assumed responsibility for the enforcement of this part, pursuant to Section 17050.

(Added by Stats. 1979, c. 62, p. 146, § 1, eff. May 14, 1979.)

§17008 Employee housing
(a) "Employee housing," as used in this part, means any portion of any housing accommodation, or property upon which a housing accommodation is located, if all of the following factors exist:

(1) The accommodations consist of any living quarters, dwelling, boardinghouse, tent, bunkhouse, maintenance-of-way car, mobilehome, manufactured home, recreational vehicle, travel trailer, or other housing accommodations, maintained in one or more buildings or one or more sites, and the premises upon which they are situated or the area set aside and provided for parking of mobilehomes or camping of five or more employees by the employer.

(2) The accommodations are maintained in connection with any work or place where work is being performed, whether or not rent is involved.

(b) **(1)** "Employee housing," as used in this part, also includes any portion of any housing accommodation or property upon which housing accommodations are located, if all of the following factors exist:

(A) The housing accommodations or property are located in any rural area, as defined by Section 50101.

(B) The housing accommodations or property are not maintained in connection with any work or workplace.

(C) The housing accommodations or property are provided by someone other than an agricultural employer, as defined in Section 1140.4 of the Labor Code.

(D) The housing accommodations or property are used by five or more agricultural employees of any agricultural employer or employers for any of the following:

(i) Temporary or seasonal residency.

(ii) Permanent residency, if the housing accommodation is a mobilehome, manufactured home, travel trailer, or recreational vehicle.

(iii) Permanent residency, if the housing accommodation is subject to the State Housing Law and is more than 30 years old and at least 51 percent of the structures in the housing accommodation, or 51 percent of the accommodation if not separated into units, are occupied by agricultural employees.

(E) "Employee housing" does not include a hotel, motel, inn, tourist hotel, multifamily dwelling, or single-family house if all of the following factors exist:

(i) The housing is offered and rented to nonagricultural employees on the same terms that it is offered and rented to agricultural employees.

(ii) None of the occupants of the housing are employed by the owner or property manager of the housing or any party with an interest in the housing.

(iii) None of the occupants of the housing have rent deducted from their wages.

(iv) The owner or property manager of the housing is not an agricultural employer as defined in Section 1140.4 of the Labor Code, or an agent, as it relates to the housing in question, of an agricultural employer.

(v) Negotiation of the terms of occupancy of the housing is conducted between each occupant and the owner of the housing or between each occupant and a manager of the property who is employed by the owner of the housing.

(vi) The occupants are not required to live in the housing as a condition of employment or of securing employment and the occupants are not referred to live in the housing by the employer of the occupants, the agent of the employer of the occupants, or an agricultural employer as defined in Section 1140.4 of the Labor Code.

(vii) The housing accommodation was not at any time prior to January 1, 1984, employee housing as defined in subdivision (a).

(2) "Employee housing," as defined by this subdivision, does not include a hotel, motel, inn, tourist hotel, or permanent housing as defined by subdivision (d) of Section 17010, which has not been maintained, prior to January 1, 1984, or is not maintained on or after that date, as employee housing, as defined in subdivision (a).

(3) If at any time prior to January 1, 1984, a housing accommodation was employee housing, as defined in subdivision (a), and on or after January 1, 1984, was employee housing, as defined in this subdivision, the owner and operator shall comply with all requirements of this part. The owner and operator of any other housing accommodation which is employee housing pursuant to this subdivision shall be subject to the licensing and inspection provisions of this part and shall comply with all other provisions of this part, except that if any portion of the housing accommodation is held out for rent or lease to the general public, the construction and physical maintenance standards of the housing accommodation shall be consistent with the applicable provisions of the State Housing Law, Part 1.5 (commencing with Section 17910), the Mobilehome-Manufactured Homes Act, Part 2 (commencing with Section 18000); or the Mobilehome Parks Act, Part 2.1 (commencing with Section 18200). The owner or operator of the employee housing shall designate all units or spaces which are employee housing, as defined in this subdivision, for the purpose of inspection and licensing by the enforcement agency, subject to confirmation by the enforcement agency, based on all relevant evidence.

(c) "Employee housing" does not include employee community housing, as defined by Section 17005.5, which has been granted an exemption pursuant to Section 17031.3; housing, and the premises upon which it is situated, owned by a public entity; or privately owned housing, including ownership by a nonprofit entity, and the premises upon which it is situated, financed with public funds equaling 50 percent or more of the original development or purchase cost.

(d) "Employee housing" means the same as "labor camp," as that term may be used in this or other codes and, notwithstanding any local ordinance to the contrary in a general law or charter city, county, or city and county, shall be deemed a residential use if it exists in structures that are single-family houses or apartment houses as those terms are used in the State Housing Law (Part 1.5 (commencing with Section 17910)).

(Amended by Stats. 1985, c. 900, § 2; Stats. 1992, c. 1298 (A.B.3526), § 6; Stats. 1995, c. 561 (S.B.851), § 1.)

§17008.7 Repealed by Stats. 1998, c. 371 (S.B.302), § 1

§17009 Labor supply employee housing
"Labor supply employee housing," as used in this part, means any place, area, or piece of land where housing is provided for five or more employees or prospective employees of another by any individual, firm, partnership, association, or corporation that, for a fee or in-kind payment, employs persons to render personal services for, or under the direction of, a third person, or that recruits, solicits, supplies, or hires persons on behalf of an employer, and that, for a fee or in-kind payment, provides in connection therewith one or more of the following services:

(a) Furnishes board, lodging, or transportation for such employees or prospective employees.

(b) Supervises, times, checks, counts, weighs, or otherwise directs or measures the work of such employees.

(c) Disburses wage payments to such employees.

(Amended by Stats. 1992, c. 1298 (A.B. 3526), § 7.)

§17009.5 Person
(a) "Person," as used in this part, includes any natural person, firm, association, organization, partnership, business trust, company, joint stock company, corporation, limited liability company, joint venture, or other organizations of persons.

(b) "Person," as used in this part, may be used interchangeably with "tenant" or "employee," and those terms are used interchangeably when the context does not imply an employer or an owner of employee housing.

(Added by Stats. 1992, c. 1298 (A.B.3526), § 8. Amended by Stats. 1994, c. 1010 (S.B.2053), § 160.)

§17010 Temporary employee housing; seasonal employee housing; permanent employee housing; permanent single-family employee housing
(a) "Temporary employee housing," as used in this part, means a labor camp which is not operated on the same site annually and which is established for one operation and is then removed.

(b) "Seasonal employee housing," as used in this part, means any camp which is operated annually on the same site and which is occupied for not more than 180 days in any calendar year.

(c) "Permanent employee housing," as used in this part, means any labor camp which is not temporary or seasonal.

(d) "Permanent single-family employee housing," as used in this part, means single-family detached dwellings, mobilehomes, as defined in Section 18008, manufactured homes, as defined in Section 18007, or factory-built housing, as defined in Section 19971, constructed and maintained in accordance with applicable state or federal laws, including required permits and inspections. Each dwelling shall be inhabited by only one family, which includes at least one permanent year-round employee. "Permanent single-family employee housing" does not include housing accommodations or property, as defined in subparagraph (D) of paragraph (1) of subdivision (b) of Section 17008.

(Amended by Stats. 1985, c. 674, § 1.3; Stats.1992, c. 1298 (A.B.3526), § 9.)

§17011 Sleeping place
"Sleeping place," as used in this part, means a dwelling, bunkhouse, tent, mobilehome, or other structure or shelter in which employees are housed in any employee housing.

(Amended by Stats. 1992, c. 1298 (A.B.3526), § 10.)

§17020 Supremacy over local ordinances or regulations; continuation of existing rules and regulations; duration of building standards
(a) Except as otherwise provided in this part, the provisions of this part, building standards published in the State Building Standards Code relating to employee housing, and the other rules and regulations promulgated pursuant to the provisions of this part which relate to labor camps apply in all parts of the state and supersede any ordinance or regulations enacted by any city, county, or city and county applicable to labor camps. Rules and

regulations adopted or continued in effect prior to January 1, 1980, by former Chapter 4 (commencing with Section 2610) of Part 9 of Division 2 of the Labor Code are hereby continued in effect as rules and regulations under this part until amended or repealed by the Department of Housing and Community Development.

(b) Building standards, as defined by Section 18909, shall remain in effect only until January 1, 1985, or until adopted, amended, or superseded by provisions published in the State Building Standards Code relating to employee housing pursuant to Chapter 4 (commencing with Section 18935) of Part 2.5, whichever occurs sooner.

(Amended by Stats. 1992, c. 1298 (A.B.3526), § 12.)

§17021 Reservations to local jurisdiction for local use zones. Fire zones, property lines, water supply and sewage disposal; exception for construction or improvement to agricultural employee housing; compliance with California Environmental Quality Act; recovery of costs incurred for review of application or permit denial

(a) Except as provided in Sections 17021.5 and 17021.6, local use zone requirements, local fire zones, property line, source of water supply and method of sewage disposal requirements are hereby specifically and entirely reserved to the local jurisdictions.

(b) Notwithstanding any other provision of law, with respect to a building permit, grading permit, or other approval from a city or county building department for the rehabilitation of real property improvements that are or will be employee housing for agricultural employees, or from a city or county health department for the operation, construction, or repair of a water system or waste disposal system servicing employee housing for agricultural employees, all of the following processing requirements shall apply:

(1) The local building or health department shall have up to 60 calendar days to approve or deny a complete application or permit request accompanied by applicable fees, or a shorter time period if required by the Permit Streamlining Act (Chapter 4.5 (commencing with Section 65920) of Division 1 of Title 7 of the Government Code). An application or permit request may be denied on procedural grounds only if the denial occurs within 30 calendar days and the denial includes an itemization of the procedural defects. An application or permit request may be denied on substantive grounds if the denial includes an itemization of all substantive defects.

(2) If the application or permit request is not approved or denied by the local building or health department within the period prescribed by paragraph (1), then the Department of Housing and Community Development may approve the application or permit request if it determines that the plans are consistent with all applicable building codes and health and safety requirements. At that time, the applicant may initiate any work consistent with the application or permit approved pursuant to this subdivision. Upon completion of the work, any other state or local agency shall accept the improvements as if they had been approved by the local building or health department. However, if that other local agency identifies any defects that would have resulted in that agency's disapproval of the improvements or plans thereto, those defects may be identified by the agency and shall be corrected by the applicant. The local building or health department shall inspect the plans and improvements prior to and during rehabilitation and issue a certificate of completion if the work is consistent with the plans and all applicable building codes and health and safety requirements.

(c) Nothing in this section shall be construed to exempt an application or permit request from complying with the California Environmental Quality Act (Division 13 (commencing with Section 21000) of the Public Resources Code).

(d) For purposes of this section, "agricultural employee" has the same meaning specified in subdivision (b) of Section 1140.4 of the Labor Code.

(e) The Department of Housing and Community Development may recover from a local building or health department costs incurred to review an application or permit request in compliance with paragraph (2) of subdivision (b). The amount recoverable may not exceed the applicable plan check fee published by the International Conference of Building Officials.

(Amended by Stats. 1992, c. 1298 (A.B.3526), § 13; Stats. 2000, c. 702 (S.B.1545), § 1; Stats 2001, c. 118 (S.B.742), §15, eff. July 30, 2001.)

§17021.5 Single-family structure with residential land use designation; treatment of employee housing; definition

(a) Any employee housing which has qualified, or is intended to qualify, for a permit to operate pursuant to this part may invoke the provisions of this section.

(b) Any employee housing providing accommodations for six or fewer employees shall be deemed a single-family structure with a residential land use designation for the purposes of this section. For the purpose of all local ordinances, employee housing shall not be included within the definition of a boarding house, rooming house, hotel, dormitory, or other similar term that implies that the employee housing is a business run for profit or differs in any other way from a family dwelling. No conditional use permit, zoning variance, or other zoning clearance shall be required of employee housing that serves six or fewer employees that is not required of a family dwelling of the same type in the same zone. Use of a family dwelling for purposes of employee housing serving six or fewer persons shall not constitute a change of occupancy for purposes of Part 1.5 (commencing with Section 17910) or local building codes.

(c) Except as otherwise provided in this part, employee housing that serves six or fewer employees shall not be subject to any business taxes, local registration fees, use permit fees, or other fees to which other family dwellings of the same type in the same zone are not likewise subject. Nothing in this subdivision shall be construed to forbid the imposition of local property taxes, fees for water services and garbage collection, fees for normal inspections, local bond assessments, and other fees, charges, and assessments to which other family dwellings of the same type in the same zone are likewise subject. Neither the State Fire Marshal nor any local public entity shall charge any fee to the owner, operator or any resident for enforcing fire inspection regulations pursuant to state law or regulation or local ordinance, with respect to employee housing which serves six or fewer persons.

(d) For the purposes of any contract, deed, or covenant for the transfer of real property, employee housing which serves six or fewer employees shall be considered a residential use of property and a use of property by a single household, notwithstanding any disclaimers to the contrary. For purposes of this section, "employee housing" includes employee housing defined in subdivision (b) of Section 17008, even if the housing accommodations or property are not located in a rural area, as defined by Section 50101.

(e) The Legislature hereby declares that it is the policy of this state that each county and city shall permit and encourage the development and use of sufficient numbers and types of employee housing facilities as are commensurate with local needs. This section shall apply equally to any charter city, general law city, county, city and county, district and any other local public entity.

(Added by Stats. 1992, c. 1298 (A.B.3526), §14. Amended by Stats. 1993, c. 952 (A.B.2011), § 1.)

§17021.6 Agricultural land use designation; treatment of employee housing; definition

(a) The owner of any employee housing who has qualified, or is intended to qualify, for a permit to operate pursuant to this part may invoke the provisions of this section.

(b) Any employee housing providing accommodations for 12 or fewer employees shall be deemed an agricultural land use designation for the purposes of this section. For the purpose of all local ordinances, employee housing shall not be deemed a use that implies that the employee housing is an activity that differs in any other way from an agricultural use. No conditional use permit, zoning variance, or other zoning clearance shall be required of employee housing that serves 12 or fewer employees that is not required of any other agricultural activity in the same zone. The permitted occupancy in employee housing in an agricultural zone shall include agricultural employees who do not work on the property where the employee housing is located.

(c) Except as otherwise provided in this part, employee housing that serves 12 or fewer employees shall not be subject to any business taxes, local registration fees, use permit fees, or other fees to which other agricultural activities in the same zone are not likewise subject. Nothing in this subdivision shall be construed to forbid the imposition of local property taxes, fees for water services and garbage collection, fees for normal inspections, local bond assessments, and other fees, charges, and assessments to which other agricultural activities in the same zone are likewise subject. Neither the State Fire Marshal nor any local public entity shall charge any fee to the owner, operator, or any resident for enforcing fire inspection regulation pursuant to state law or regulation or local ordinance, with respect to employee housing that serves 12 or fewer persons.

(d) For the purposes of any contract, deed, or covenant for the transfer of real property, employee housing which serves 12 or fewer employees shall be considered an agricultural use of property, notwithstanding any disclaimers to the contrary. For purposes of this section, "employee housing" includes employee housing defined in subdivision (b) of Section 17008, even if the housing accommodations or property are not located in a rural area, as defined by Section 50101.

(e) The Legislature hereby declares that it is the policy of this state that each county and city shall permit and encourage the development and use of sufficient numbers and types of employee housing facilities as are commensurate with local need. This section shall apply equally to any charter city, general law city, county, city and county, district, and any other local public entity. For the purposes of this section, "12 or fewer employees" does not include the family members of any employee.

(f) If any owner who invokes the provisions of this section fails to maintain a permit to operate pursuant to this part throughout the first 10 consecutive years following the issuance of the original certificate of occupancy, both of the following shall occur:

(1) The enforcement agency shall notify the appropriate local government entity.

(2) The public agency that has waived any taxes, fees, assessments, or charges for employee housing pursuant to this section may recover the amount of those taxes, fees, assessments, or charges from the landowner, less 10 percent of that amount for each year that a valid permit has been maintained.

(g) Subdivision (f) shall not apply to an owner of any prospective, planned, or unfinished employee housing facility who has applied to the appropriate state and local public entities for a permit to construct or operate pursuant to this part prior to January 1, 1996.

(Added by Stats. 1992, c. 1298 (A.B.3526), § 15. Amended by Stats. 1995, c. 376 (S.B.305), § 1.)

§17021.7 Mobilehomes and recreational vehicles used to house agricultural employees; maintenance required

Notwithstanding subdivision (b) of Section 18214, subdivision (b) of Section 18215, and subdivision (b) of Section 18217, mobilehomes and recreational vehicles used to house agricultural employees shall be maintained in conformity with the applicable requirements of the Mobilehome Parks Act (Part 2.1 (commencing with Section 18200)).

(Added by Stats. 1994, c. 896 (A.B.3735), § 4.)

§17022 Occupational safety and health standards; enforcement

Enforcement of occupational safety and health standards established pursuant to Chapter 6 (commencing with Section 140) of Division 1 of the Labor Code is hereby specifically and entirely reserved to the Division of Industrial Safety.

(Added by Stats. 1979, c. 62, p. 146, § 1, eff. May 14, 1979.)

§17022.5 Model or prototype plans for employee housing

The department shall adopt, and make available to the public, model or prototype plans for several types of employee housing, including, but not limited to, barracks, seasonal housing, family housing, and recreational vehicle parks. Any person intending to construct employee housing may adopt one or more of these models as the plans for the proposed housing.

(Added by Stats. 1986, c. 1495, § 2.)

§17023 Application of rules and regulations; duration of building standards

(a) Rules and regulations adopted or continued in effect pursuant to the provisions of this part relating to the erection or construction of buildings or structures within employee housing shall not apply to existing buildings or structures or to buildings and structures as to which construction is commenced or approved prior to the effective

date of the rules and regulations, except by act of the Legislature, but regulations relating to use, maintenance, and occupancy shall apply to all employee housing approved for construction and operation before or after the effective date of these rules and regulations.

(b) Building standards, as defined in Section 18909, shall remain in effect only until January 1, 1985, or until adopted, amended, or superseded by provisions published in the State Building Standards Code pursuant to Chapter 4 (commencing with Section 18935) of Part 2.5, whichever occurs sooner.

(Amended by Stats. 1992, c. 1298 (A.B.3526), § 16.)

§17024 Housing for faculty or employees of schools, colleges, or universities

This part does not apply to resident-employment housing provided for faculty or employees of any public or privately operated school, college, or university. This part does not apply to any employee housing owned, operated, and maintained by any of the following:

(a) The federal government.

(b) The state.

(c) Any agency or political subdivision of the state.

(d) Any city, county, or city and county.

(Amended by Stats. 1984, c. 1342, § 4, eff. Sept. 26, 1984, operative Jan. 1, 1985; Stats. 1992, c. 1298 (A.B.3526), § 17.)

§17030 Permit required; exemptions; enforcement for railroad corporations

(a) Every person operating employee housing shall obtain a permit to operate that employee housing from the enforcement agency, unless otherwise exempted by this part. It shall be unlawful for any person to operate employee housing without a valid permit to operate issued by the enforcement agency, as required by this part. Permits to operate shall be issued annually by the enforcement agency, except as provided in this section and Section 17030.5.

(b) Employee housing on a dairy farm which meets the requirements of Section 32505 of the Food and Agricultural Code, consisting only of permanent single-family employee housing, may be exempted from the requirement of obtaining a permit to operate employee housing, as provided in Section 17031. This housing shall meet the requirements of the State Housing Law before an exemption is granted.

(c) A permit to operate shall be valid from the date of issuance through December 31 of the year of issuance, or December 31 of the year designated by the enforcement agency for permanent single-family employee housing. Permits to operate employee housing may prescribe conditions on the use or occupancy of the employee housing.

(d) The Department of Housing and Community Development shall be the enforcement agency for any employee housing owned or operated by a railroad corporation.

(Amended by Stats. 1992, c. 1298 (A.B.3526, § 18.)

§17030.5 Permanent housing; duration of permit; findings

(a) A permit to operate employee housing consisting only of permanent single-family housing may, when approved by the enforcement agency, be issued for a longer period of time not to exceed five years.

(b) No permit to operate employee housing shall be issued for a period of time longer than one year during the first year of operation of the employee housing, or if within the previous two years the employee housing has been found to be in violation of this part or the regulations adopted pursuant thereto. Whenever the enforcement agency issues a permit for a period of time longer than one year, it shall make written findings indicating the reasons for issuing such a permit.

(c) The findings of the enforcement agency pursuant to subdivision (b) shall include, but not be limited to, the following information:

(1) The year the dwellings in the employee housing were constructed.

(2) The number of years the employee housing has been operated with a valid permit to operate.

(3) The number and character of any complaints received during the time the employee housing has been operating either with or without a permit.

(4) Any violations cited in the last inspection of the employee housing.

(Amended by Stats. 1992, c. 1298 (A.B.3526), § 19.)

§17031 Permanent housing; exemption from annual permit requirement; procedure; conditions; findings; revocation

(a) **(1)** The operator of employee housing on a dairy farm that meets the requirements of Section 32505 of the Food and Agricultural Code, consisting only of permanent single-family employee housing, may request an exemption from the requirement of obtaining an annual permit to operate. The employee housing camp operator shall notify each tenant of the permanent single-family employee housing in writing that such an exemption is being requested. The request for exemption shall be made in writing to the enforcement agency.

(2) An exemption shall be granted to permanent single-family employee housing unless the housing is in violation of the State Housing Law, building standards published in the California Building Standards Code relating to employee housing, or the other regulations adopted pursuant to the State Housing Law in a manner that materially affects the health and safety of the occupants, or in the case of a mobilehome or manufactured home, is in violation of the National Manufactured Housing Construction and Safety Standards Act of 1974 (42 U.S.C. Secs. 5401, et seq.) or regulations of the department pursuant to Section 18028 in a manner that materially affects the health and safety of the occupants, or has been found in violation of this chapter within the previous two years.

(b) Whenever the enforcement agency issues an exemption from the requirement of obtaining a permit to operate, it shall make written findings indicating the reasons for issuing the exemption. Exemptions shall be reviewed annually by the enforcement agency.

The findings of the enforcement agency shall include, but not be limited to, all of the following information:

(1) The year the dwellings in the employee housing were constructed.

(2) The number of years the employee housing has been operated with a valid permit to operate.

(3) The number and character of any complaints received during the time the employee housing has been operating either with or without a permit.

(4) Any violations cited in the last inspection of the employee housing.

(c) Failure to maintain any permanent housing in accordance with the State Housing Law, or, in the case of mobilehomes or manufactured homes, failure to maintain these mobilehomes or manufactured homes in accordance with the provisions of Part 2.1 (commencing with Section 18200) of Division 13, and the regulations adopted pursuant thereto, in a manner which materially affects the health and safety of the occupants, shall be considered cause for revocation of an exemption.

(Amended by Stats. 1992, c. 1298 (A.B.3526), § 20; Stats. 2000, c. 471 (A.B.2008), § 3.)

§17031.3 Permit for employee community housing; exemptions

(a) Every person operating or owning employee community housing shall obtain a permit to operate such housing as a labor camp pursuant to this part unless an exemption is granted by the enforcement agency

pursuant to this section. A request for an exemption for each community shall be made in writing to the enforcement agency. The person requesting the exemption shall give written notice to each employee/tenant of the employee community housing that an exemption is being requested. The notice shall state the address and telephone number of the enforcement agency, and shall state that any employee/tenant may inform the enforcement agency of violations of health and safety standards within his or her dwelling unit.

(b) The enforcement agency, after a review of all relevant facts, shall grant an exemption to the owner or operator of the employee community housing unless it finds any of the following:

(1) The housing is in violation of provisions of the State Housing Law or the regulations adopted pursuant thereto in a manner which materially affects the health and safety of the residents of the housing.

(2) The housing, within the previous two years, has been found in violation of the provisions of this part or the regulations adopted pursuant thereto in a manner which materially affects the health and safety of the residents of the housing.

(3) The housing does not meet the requirements of employee community housing as defined by Section 17005.5.

(c) An exemption granted for employee community housing in one community shall not apply to employee community housing in other communities operated or owned by the same person.

(d) Employee community housing granted an exemption pursuant to this section, during the period of such exemption, shall be subject to the provisions of the State Housing Law. During this period, any notice of violation of such law and verification of corrective action shall be forwarded to the department. Not less than once every 10 years after an exemption is granted pursuant to this part, every person operating or owning employee community housing shall give written notice to each employee/tenant of the employee community housing which shall state the address and telephone number of the enforcement agency, and shall state that any employee/tenant may inform the enforcement agency of violations of health and safety standards within his or her dwelling unit.

(e) The exemption granted pursuant to this section shall be rescinded by the enforcement agency if the employee community housing is not operated or maintained in substantial compliance with Section 17005.5.

(Added by Stats. 1979, c. 1031, p. 3556, § 3.)

§17031.4 Local enforcement agency; information to department

When the enforcement agency is a local agency, upon granting an exemption pursuant to Section 17031.3, the enforcement agency shall submit the following information to the department:

(a) The year the housing was constructed.

(b) The number of years, if any, the housing has been operated as employee housing with a valid permit to operate.

(c) The number and character of any complaints received during the time the housing has been operated as employee housing.

(d) Any violations of the provisions of this part and the State Housing Law which materially affect health and safety cited in the last inspection of the housing.

(e) That the employee community housing has been exempted pursuant to Section 17031.3, and conforms with the requirements of Section 17005.5.

(Amended by Stats. 1992, c. 1298, (A.B.3526), § 21.)

§17031.5 Employee Housing; termination or modification of tenancy; tenants' rights

(a) No person operating employee housing shall terminate or modify a tenancy by increasing rent, decreasing services, threatening to bring or bringing an action to evict, refusing to renew a tenancy, or in any other way

intimidating, threatening, restraining, coercing, blacklisting, or discharging an employee or tenant because of the tenant's exercise of any of the following acts:

(1) Complaining in good faith, orally or in writing, to the operator, landlord, or employer about tenantability or about any right provided by this part.

(2) Exercising any legal right with respect to the housing provided by this part.

(3) Complaining in good faith, orally or in writing, to any applicable enforcement agency about tenantability or about any right provided by this part.

(4) Bringing an action to enforce any rights provided for by this part or Chapter 2 (commencing with Section 1940) of Title 5 of Part 4 of Division 3 of the Civil Code.

(5) Bringing an action under Section 1942.5 of the Civil Code.

(b) The tenant shall have a defense of retaliation in any action for possession if the employer or landlord acted in violation of this section. If the employer or landlord acts to discharge an employee or tenant or to modify or terminate a tenancy within six months after the employee or tenant has exercised any of the acts enumerated in subdivision (a), there is a rebuttable presumption affecting the burden of proof that the employer's or landlord's action was retaliatory.

(c) No tenant shall have a defense of retaliation in an action for possession where tenantability is an issue of fact and the untenantable condition was caused by the deliberate or negligent act or omission of the tenant or a member of his or her family, or other persons on the premises with his or her consent.

(Amended by Stats. 1985, c. 900, § 3; Stats. 1991, c. 786 (A.B.923), § 1; Stats. 1992, c. 1298 (A.B.3526), § 22.)

§17031.6 Eviction proceedings; defenses; payment of reasonable monthly rental value to court in cases of delay or continuance

(a) In any action brought pursuant to Chapter 4 (commencing with Section 1159) of Title 3 of Part 3 of the Code of Civil Procedure, in order to evict a tenant from employee housing, this section shall apply to that proceeding, notwithstanding any other provision of law including, but not limited to, Section 1170.5 of the Code of Civil Procedure.

(b) If, in an action subject to this section, a tenant alleges both of the following in an answer or other response to an unlawful detainer action, the trial on that action shall be set not earlier than 30 days from the date of filing the answer, and in no event prior to the completion of reasonable and diligently pursued discovery, as determined by the court, unless both parties stipulate to an earlier date:

(1) The tenant is not guilty of unlawful detainer because he or she has engaged in protected activity pursuant to Section 1942.5 of the Civil Code or Section 17031.5 of this code.

(2) The landlord's claim that the eviction is to allow the landlord to remove the subject rental unit from use as employee housing or from the market in order to rehabilitate or demolish it is a pretext to retaliate against the tenant.

(c) If, in an action subject to this section, a tenant alleged that he or she is not guilty of unlawful detainer because he or she has engaged in protected activity pursuant to Section 1942.5 of the Civil Code or Section 17031.5, and the landlord alleges or introduces evidence at trial that the purpose of the eviction is to allow the landlord to remove the subject rental unit from use as employee housing or from the market in order to rehabilitate or demolish it, the court shall immediately continue the trial for not less than 30 days, unless both parties stipulate to a waiver of this requirement.

(d) **(1)** If, pursuant to this section, a trial is delayed or continued, the court, may, upon a noticed motion for a payment order by the lessor, order the monthly payment of the reasonable monthly rental value to the court, if rent were otherwise due, as a condition of issuing the delay or continuance order.

(2) "Reasonable monthly rental value," as used in this subdivision, means the amount determined by the court after deducting from the contract rent any set offs, including, but not limited to, a reduction in the rent because the dwelling is partially or completely untenantable or rent abatements due to the tenant or lessee. In addition, in determining whether to order the payment of a reasonable monthly rental value to the court, or in ascertaining its amount, the court shall consider the probability of the tenant or lessee prevailing in the trial, the financial ability of the tenant or lessee to maintain this action, and any other factor relevant to the proposed payment order.

(Added by Stats. 1985, c. 900, § 4. Amended by Stats. 1992, c. 1298 (A.B.3526), § 23.)

§17031.7 Retaliatory employment action

(a) No person operating employee community housing that has been granted an exemption pursuant to Section 17031.3, or who is in the process of applying for such exemption, shall take any retaliatory employment action against an employee/tenant because of the employee/tenant's exercise of any of the following acts:

(1) Exercising any legal right with respect to the housing.

(2) Complaining, orally or in writing, to the landlord or employer about tenantability of the housing.

(3) Complaining, orally or in writing, to any applicable agency about tenantability of the housing.

(4) Bringing an action to enforce any rights provided for by this part or Chapter 2 (commencing with Section 1940) of Title 5 of Part 4 of Division 3 of the Civil Code.

(b) "Retaliatory employment action" includes discharge from employment, wage decrease, demotion, or any other action detrimental to the employee/tenant's employment status because of the employee/tenant's exercise of the enumerated acts.

(c) Any person subject to this section shall also be subject to the provisions of Section 1942.5 of the Civil Code.

(Added by Stats. 1979, c. 1031, p. 3557, § 5.)

§17031.8 Local enforcement agency; submission of information; annual report

(a) An agency which exercises the responsibility for the enforcement of this part pursuant to Section 17050 shall submit to the Department of Housing and Community Development, on forms provided by the department, the information specified in subdivision (c) by March 31 of each year regarding the previous calendar year.

(b) The Department of Housing and Community Development shall gather the information specified in subdivision (c) for all permittees for which it acts as the enforcement agency and include a summary of the information from the permittees and enforcement agencies in the annual report submitted pursuant to Section 50408 regarding housing programs administered by the department.

(c) The following information shall be provided for purposes of subdivisions (a) and (b) for the reporting year:

(1) The number and location of employee housing accommodations, including the number of permits to operate issued for employee housing accommodations.

(2) The number and location of inactive employee housing accommodations.

(3) The number and location of employee housing accommodations found operating without a permit.

(4) The number of employees occupying employee housing accommodations with a permit.

(5) The number of employees occupying accommodations found to be operating without a permit.

(6) The number and types of inspections and reinspections performed.

(7) A schedule of fees charged, the amount of fees collected for each type of fee charged and the total amount of fees collected.

(8) The number of complaints received during the reporting year and the character of any violations found for each accommodation operating under permit, operating without a permit, or inactive.

(9) The number and character of violations of this part and regulations adopted pursuant to this part found during inspection of each accommodation operating under permit, or operating without a permit.

(10) The number of violations of this part and regulations adopted pursuant to this part that resulted in civil citations.

(11) The number of cases referred to prosecutorial agencies such as the Attorney General or local district attorneys, the number of cases filed to enforce this part, and the amounts of all fines and civil penalties collected as a result of the enforcement of this part.

(12) The number of staff hours dedicated to the implementation of the Employee Housing Act (Part 1 (commencing with Section 17000)).

(13) The number and location of employee housing receiving an exemption pursuant to Section 17031, 17031.3, 17031.4, or 17033.

(d) The information specified in subdivision (c) shall be maintained by the department and provided to members of the public who have requested it in writing.

(Added by Stats. 1988, c. 292, § 1. Amended by Stats. 1991, c. 790 (A.B.1816), § 1; Stats. 1992, c. 1298 (A.B.3526), § 24; Stats. 1993, c. 952 (A.B.2011), § 3; Stats. 1995, c. 561 (S.B.851), § 1.5.)

§17032 Applications; time; contents; amended permits

Application for a permit to operate shall be made to the1 enforcement agency at least 45 days prior to the date of initial occupancy and shall be on the forms supplied by the enforcement agency and shall contain at least the following information:

(a) The name and address and telephone numbers of the employee housing owner and operator.

(b) The location of the employee housing.

(c) Approximate number of occupants to be housed.

(d) A description of the facilities comprising the employee housing.

(e) Approximate dates of occupancy.

The operator shall obtain an amended permit to operate when there is any change in the foregoing information applicable to the employee housing.

(Amended by Stats. 1992, c. 1298 (A.B.3526), § 25.)

§17033 Railroad Corporations; permits to operate employee housing

Section 17032 shall not apply to employee housing owned or operated by railroad corporations. Application for a permit to operate employee housing owned or operated by a railroad corporation shall be made to the Department of Housing and Community Development within 30 days of initial occupancy and shall contain at least the following information:

(a) The name and address and telephone numbers of the employee housing owner and operator.

(b) The present location of the employee housing.

(c) The present approximate number of occupants to be housed.

(d) A description of the present facilities comprising the employee housing.

(e) Approximate dates of present occupancy. An amended permit shall not be required if there is any change in the foregoing information applicable to the railroad employee housing, provided, however, the railroad corporation shall make this information available to the department upon reasonable request.

(Amended by Stats. 1992, c. 1298 (A.B.3526), § 27.)

§17034 Violations

If any person who holds an annual permit to operate employee housing violates any of the provisions of this part, building standards published in the State Building Standards Code relating to employee housing, the other regulations adopted pursuant to the provisions of this part, or conditions of the permit, the enforcement agency shall proceed according to Section 17055 immediately upon discovery of such a violation.

(Amended by Stats. 1992, c. 1298 (A.B.3526), § 27.)

§17035 Roster

The department shall establish and maintain a roster of all employee housing having a valid permit to operate.

(Amended by Stats. 1992, c. 1298 (A.B.3526), § 28.)

§17036 Regulations; fees

(a) Except as provided in Section 18930, the department shall adopt regulations which it determines are necessary for the administration and enforcement of this part. The regulations adopted, amended, or repealed shall prescribe reasonable requirements for issuance of permits and establish procedures for suspension of permits, including appeal procedures.

(b) The department shall establish a schedule of fees to pay for the cost of administration and enforcement of this part.

(c) The department may adopt additional regulations to facilitate the development of employee housing pursuant to Sections 17021.5 and 17021.6.

(Amended by Stats. 1986, c. 1495, § 3; Stats. 1992, c. 1298 (A.B.3526), § 29.)

§17037 Compliance with requirements; failure to obtain permit; penalty fees

Every person, or the agent or officer thereof, constructing, operating, or maintaining employee housing shall comply with the requirements of this part, with building standards published in the State Building Standards Code relating to employee housing, and with the other regulations adopted pursuant to this part.

(a) Any person operating or maintaining employee housing without first having obtained a permit to operate from the enforcement agency shall pay double the fees prescribed for the permit to operate the employee housing.

(b) Any person found for a second or subsequent time within a five-year period to be operating or maintaining employee housing without first having obtained a permit to operate from the enforcement agency shall pay 10 times the fees prescribed for the permit to operate the employee housing. The two or more violations referenced in this paragraph may be with regard either to the same enforcement agency or to two or more different enforcement agencies.

(Amended by Stats. 1986, c. 1495, § 4; Stats. 1991, c. 790 (A.B.1816), § 2; Stats. 1991, c. 795 (A.B.2164), § 1; Stats. 1992, c. 1298 (A.B.3526), § 30.)

§17037.5 Certificate of non-operation; submittal to enforcement agency; requirements

(a) Any person who ceases to operate or maintain a[1] employee housing which is subject to the permit requirement pursuant to this part shall be required to annually complete and submit a Certificate of Non-Operation to the enforcement agency. The Certificate of Non-Operation shall be submitted for two years following the

discontinuation of the use of any area on the property as employee housing. The Certificate of Non-Operation shall attest under penalty of perjury that the employee housing has been destroyed, or is no longer owned or operated, or has not been and shall not be occupied by five or more employees during the calendar year.

(b) The Certificate of Non-Operation shall include the owner's name and address, the operator's name and address, the employee housing name and location, the maximum number of employees who have occupied or shall occupy the employee housing during the calendar year, and any other information considered relevant by the enforcement agency. The Certificate of Non-Operation shall be completed and submitted to the enforcement agency no later than 30 calendar days after the enforcement agency provides the form to the owner or operator.

(Added by Stats. 1991, c. 795 (A.B.2164), § 2. Amended by Stats. 1992, c. 1298 (A.B.3526), § 31.)

[1]So in enrolled bill.

§17038 Compliance; appointment of responsible person; emergency telephone number
At all employee housing, a responsible person shall be appointed by the operator to maintain the employee housing in compliance with the use, maintenance, and occupancy requirements of this part and the regulations adopted pursuant thereto. In addition, at all employee housing, an operating telephone number shall be posted conspicuously for the purposes of emergencies and complaints.

(Amended by Stats. 1992, c. 1298 (A.B.3526), § 32.)

§17039 Compliance; maintenance and sanitation; application of violation provisions
(a) Every occupant of employee housing shall properly use the facilities furnished and shall comply with the relevant maintenance and sanitation provisions of this part.

(b) The provisions of Chapter 6 (commencing with Section 17060) do not apply to this section.

(Added by Stats. 1997, c. 49 (A.B.359), § 1.)

§17040 Duties of department; enforcement of building standards; adoption and submission of building standards
(a) Except as provided in Section 18930, the department shall adopt, amend, or repeal rules and regulations for the protection of the public health, safety, and general welfare of employees and the public, governing the erection, construction, enlargement, conversion, alteration, repair, occupancy, use, sanitation, ventilation, and maintenance of all employee housing.

(b) The appropriate enforcement agency shall enforce building standards published in the State Building Standards Code relating to employee housing and other regulations of the department promulgated pursuant to subdivision (a), including, but not limited to, processing violations in accordance with Sections 17274 and 24436.5 of the Revenue and Taxation Code.

(c) The department shall adopt and submit building standards for approval pursuant to Chapter 4 (commencing with Section 18935) of Part 2.5 for the purposes described in this chapter.

(Amended by Stats. 1992, c. 1298 (A.B.3526), § 33.)

§17041 Consistency with accepted standards and practices; fee schedule; waiver or reduction of fees
(a) Except as provided in Section 17011, the rules and regulations adopted, amended, or repealed from time to time pursuant to this part shall be consistent with accepted standards and practices reasonably applicable to permanent and temporary employee housing and the utilization of housing or camping facilities. In promulgating rules and regulations, the department shall consider, among other things, geographic, topographic, and climatic conditions. The department may establish a schedule of fees for the construction and operation of employee housing wherever the department is the enforcing agency.

(b) The department may provide for the waiver or reduction of fees during construction or substantial rehabilitation that is not the result of a notice by an enforcement agency where funding is received from a public entity. The department shall provide for a waiver of the fees for an operating permit during the first three years of

operation after new construction or substantial rehabilitation of employee housing that is not the result of a notice by an enforcement agency.

(Amended by Stats. 1992, c. 1298 (A.B.3526), § 34.)

§17042 Building standards; restrictions on department

Notwithstanding any other provision of this code or of law, and except as provided in the State Building Standards Law, Part 2.5 (commencing with Section 18900), on and after January 1, 1980, the department shall not adopt or publish a building standard as defined in Section 18909, unless the provisions of Sections 18930, 18933, 18938, 18940, 18943, 18944, and 18945 are expressly excepted in the statute under which the authority to adopt rules, regulations, or orders is delegated. Any building standard adopted in violation of this section shall have no force or effect. Any building standard adopted before January 1, 1980, or continued in effect, pursuant to this part and not expressly excepted by statute from the provisions of the State Building Standards Law, shall remain in effect only until January 1, 1985, or until adopted, amended, or superseded by provisions published in the State Building Standards Code, whichever occurs sooner.

(Added by Stats. 1979, c. 1152, p. 4252, § 54. Amended by Stats. 1983, c. 101, § 122.)

§17043 Overcrowding of accommodations; notice; proceedings; appeal; vacation of accommodations; alternative housing

(a) Notwithstanding any other provision of law, if the condition rendering any of the accommodations in employee housing substandard is the overcrowding of the accommodations, the enforcement agency shall provide notice to the affected residents of the condition and shall give the residents of the accommodations a reasonable opportunity to correct the violation prior to the commencement of any action or proceeding pursuant to this part. If the enforcement agency determines to institute proceedings to correct the overcrowded condition, the residents may appear and be heard at a hearing convened as part of the proceedings. If the enforcement agency permits the owner or operator of the employee housing to appeal the initial notice of violation or order to abate, the residents shall also be permitted to appeal the initial notice of violation or order to abate.

(b) On appeal, if the enforcement agency determines that the only means of abatement is the vacation of the accommodations, the enforcement agency shall consider the availability of alternative housing for the residents, and shall, if alternative housing is not available, grant the residents a reasonable period of time, as determined by the enforcement agency, to find alternative housing.

(Added by Stats. 1989, c. 1002, § 3, eff. Sept. 22, 1986; Stats. 1986, c. 1495, § 5. Amended by Stats. 1992, c. 1298 (A.B.3526), § 35.)

§17050 Local enforcement; assumption of enforcement by department; powers of enforcement agency

(a) Except as provided in Section 18930, the Department of Housing and Community Development may promulgate rules and regulations to interpret and make specific this part. When adopted, those rules and regulations shall apply to all parts of the state.

(b) Upon written notice to the Department of Housing and Community Development, any city, county, or city and county may assume the responsibility for the enforcement of this part, for the building standards published in the California Building Standards Code relating to employee housing, and for the other regulations adopted pursuant to this part following approval by the department for that assumption.

(c) The Department of Housing and Community Development shall adopt regulations which shall set forth the conditions for assumption and may include required qualifications of local enforcement agencies. When assumption is approved, the department shall transfer the responsibility for enforcement to the city, county, or city and county, together with all records of active and inactive employee housing within its jurisdiction.

(d) A city, county, or city and county may, by ordinance, establish a schedule of fees for the operation of employee housing not to exceed that which is established by the department. In no event may fees be charged to residents of employee housing.

(e) **(1)** In the event of nonenforcement of this part, of the building standards published in the California Building Standards Code relating to employee housing, or of the other rules and regulations adopted pursuant to this

part, the department shall enforce this part, the building standards published in the California Building Standards Code relating to employee housing, and the rules and regulations adopted pursuant to this part in any city, county, or city and county after the department has given written notice to the governing body of the city, county, or city and county, setting forth in what respects the city, county, or city and county has failed to discharge its responsibility, and has failed to initiate corrective measures to carry out its responsibility within 30 days of the date of the notice.

(2) On or after January 1, 1987, in the event the local enforcement agency has failed to initiate adequate and reasonable corrective measures to carry out its responsibility, as determined by the department, within 30 days of the date of notice of one or more specific examples of nonenforcement, the department, at its option, may undertake investigation and enforcement of the alleged violations of this part within the local enforcement agency's jurisdiction, and the local enforcement agency shall be liable to the department and the Attorney General for the actual costs of the investigation and enforcement by these state agencies.

(f) **(1)** The department shall conduct an annual evaluation of the enforcement of this part, of the building standards published in the California Building Standards Code relating to employee housing, and of the other regulations adopted pursuant to this part by each city, county, or city and county which has assumed responsibility for enforcement. The department shall submit a written summary of the evaluation conducted pursuant to this subdivision with the report required by Section 50408.

(2) The department, in consultation with interested persons, including housing advocates and farming organizations, shall conduct an evaluation of the definition of "rural" as used in paragraph (1) of subdivision (b) of Section 17008 and submit a written summary of the evaluation with the report required in calendar year 1996 by Section 17031.8.

(g) Except as provided in Section 18945, the department shall be sole judge as to whether the local enforcement agency is properly enforcing the provisions. Except as provided in Section 18945, the local enforcement agency shall have the right to appeal the decision to the department.

(h) Any city, county, or city and county, upon written notice from the governing body to the department, may cancel its assumption of responsibility for the enforcement of these provisions. The department, upon receipt of that notice, shall assume the responsibility within 30 days.

(i) The enforcement agency may:

(1) Enter public or private properties to determine whether there exists any employee housing to which this part applies.

(2) Enter and inspect all employee housing wheresoever situated, and inspect all accommodations, equipment, or paraphernalia connected therewith.

(3) Enter and inspect the land adjacent to the employee housing to determine whether the sanitary and other requirements of this part, the building standards published in the California Building Standards Code relating to employee housing, and the other rules and regulations adopted pursuant to this part have been or are being complied with.

(Amended by Stats. 1986, c. 1495, § 5.5; Stats. 1991, c. 790 (A.B.1816), § 3; Stats. 1992, c. 1298 (A.B. 3526), § 36; Stats. 1995, c. 561 (S.B.851), §23)

§17051 Service of process or notice

For the purpose of securing compliance with this part, the officers and agents of the enforcement agency may serve any process or notice throughout its jurisdiction.

(Added by Stats. 1979, c. 62, p. 146, § 1, eff. May 14, 1979.)

§17052 Annual inspections; exceptions

The enforcement agency shall annually enter and inspect, and reinspect as necessary, all employee housing accommodations for compliance with the provisions of this part and regulations adopted pursuant to this part, except:

(a) Accommodations for employee housing consisting only of permanent single family housing that have been granted an exemption as provided in Section 17031.

(b) Accommodations for employee housing that have been issued a multiyear permit to operate pursuant to Section 17030.5.

(c) Accommodations for employee housing that are inactive.

(d) Accommodations for employee housing inspected in the prior calendar year with no violations identified or complaints received by the enforcement agency, which shall be inspected at least biennially.

The enforcement agency shall make every effort to complete the inspection prior to the occupancy of the employee housing.

(Amended by Stats. 1992, c. 1298, c. (A.B.3526), § 37; Stats. 1995, c. 561 (S.B.851), § 3.)

§17053 Complaint and information file; public record; availability to local enforcement agencies; district attorneys, and attorney general

The department shall maintain a file of all reports of complaint or other significant information regarding employee housing maintenance and operation. Each file and information shall be available to local enforcement agencies, district attorneys, and the Attorney General. This material shall be a matter of public record.

(Amended by Stats. 1992, c. 1298 (A.B.3526), § 38.)

§17054 Attorney general; investigations; powers; prosecutions

The Attorney General, upon the request of the Director of Housing and Community Development, shall conduct such investigations as may be necessary to determine whether any violation of any provision of this part has occurred. For such purpose, the Attorney General shall have the powers specified in Section 17050.

The Attorney General shall conduct such prosecutions of violations of this part as the director may request.

(Added by Stats. 1979, c. 62, p. 146, §1, eff. May 14, 1979.)

§17055 Administrative complaint; civil action

(a) Any person residing in employee housing subject to this part may file an administrative complaint orally or in writing with the enforcement agency. The enforcement agency shall deliver a summary or copy of the complaint, by mail or in person, to the owner or operator, at the time of filing the complaint.

(b) If a civil action under this part has not been filed by the enforcement agency within 21 days after receipt of the complaint, the complainant may bring a civil action for injunctive or declaratory relief and appropriate statutory damages, civil penalties, actual damages, penalties, and other remedies which arise from any violation of this part, building standards published in the State Building Standards Code relating to employee housing, regulations adopted pursuant to this part, or conditions of the permit.

(c) In any civil action under this section, if the enforcement agency certifies that the employee housing is in compliance with this part, building standards published in the State Building Standards Code relating to employee housing, regulations adopted pursuant to this part, and conditions of the permit, no injunctive relief related to mandatory repairs shall be granted with respect to any alleged violation covered by the certificate.

(d) In any civil action brought by a private person or entity under this section, the private person or entity may be granted reasonable attorney's fees and costs, in addition to any other remedy granted, if the private person or entity prevails, and if the trier of fact finds that the violations involve retaliation or are so extensive and of such a nature that the immediate health and safety of residents or the public is endangered or has been endangered.

(e) If a complainant alleges, and the court finds, that residents of the employee housing were in imminent peril as a result of serious violations of this part, the complainant may immediately proceed with the filing of a civil action without regard to the 21-day waiting period specified in subdivision (b).

(Amended by Stats. 1992, c. 1298 (A.B.3526), § 39, Stats. 2000, c. 702 (S.B.1545), § 2.)

§17056 Prosecution of serious violators; implementation of part; bilingual civil service employees; report

(a) In every part of the state, notwithstanding assumption of responsibilities by local enforcement agencies pursuant to Section 17050, the department shall establish procedures and devote resources to locating and prosecuting the most serious violators of this part and those who refuse to apply for or obtain permits to operate pursuant to this part, as determined by the department.

(b) The department shall maximize the efforts of personnel implementing this part by seeking to use new resources and nontraditional means, by coordinating with state, local, and federal agencies and by training and coordinating with local health and building departments.

(c) All of the requirements of this part shall be performed by civil service employees of the department who, to the extent feasible, shall be bilingual in Spanish and English.

(Added by Stats. 1986, c. 1495, § 6. Amended by Stats. 1991, c. 790 (A.B.1816), § 4; Stats. 1992, c. 1296 (S.B.986), § 14, eff. Sept. 30, 1992; Stats. 1992, c. 1298 (A.B.3526), § 40; Stats. 1993, c. 952 (A.B.2011), § 4; Stats. 1995, c. 561 (S.B.851), § 4.)

§17060 Nuisance; health or safety hazards; jurisdiction; service of summons; lis pendens; recordation

(a) Any employee housing which does not conform to this part, building standards published in the State Building Standards Code relating to employee housing, the other regulations adopted pursuant to this part, or conditions of the permit, is a public nuisance and, if not made to conform within five days or within a longer period of time, not to exceed 30 days, which may be allowed by the enforcement agency after written notice, shall be abated by proper action brought in the superior court of the county in which the employee housing or greater portion thereof is situated. Where inspection verifies that the owner or operator of employee housing is proceeding with reasonable diligence, or where conditions beyond the control of the owner or operator prevent conformance, the enforcement agency may grant time extensions not to exceed 30 days in duration. No more than two of these extensions shall be allowed by the enforcement agency prior to initiation of action to abate the public nuisance.

(b) Any violation of this part, building standards published in the State Building Standards Code relating to employee housing, the other regulations adopted pursuant to this part, or the provisions of the permit which constitute an immediate or material hazard to the health or safety of the occupants of employee housing, shall be remedied within five days after written notice by the enforcement agency, or shorter time in case of emergency. In the event of failure to comply with this section, the Attorney General, or the attorney for the enforcement agency, shall, by verified complaint setting forth the facts, apply to the superior court for an order granting the relief for which the action or proceeding is brought until the entry of a final judgment or order.

(c) The superior court may make any order for which application is made pursuant to this section.

(d) In any action or proceeding brought pursuant to this part, service of summons is sufficient if served in the manner provided in the Code of Civil Procedure.

(e) **(1)** Any enforcement agency which institutes an action or proceeding pursuant to this section shall, at the time of filing the action or proceeding, record in the office of the recorder of the county or counties in which the property affected by the action or proceeding is situated, a notice of the pendency of the action or proceeding.

(2) The enforcement agency may charge the property owner for any costs involved in recording the notice and shall reimburse the owner for any amount charged if the action or proceeding is dismissed or if judgment is rendered for the property owner.

(f) The notice recorded pursuant to subdivision (e) shall be withdrawn by the enforcement agency by recording in the office of the county recorder, in the county or counties in which the notice was recorded, a notice of withdrawal within five days following satisfaction of a court order or other resolution of the action or proceeding.

(g) In any action or proceeding brought pursuant to this part, it is not necessary for the complainant to provide or file any undertaking or bond for the issuance of any preliminary or permanent injunction. In addition, it is not necessary for a complainant to allege or prove actual damages or the threat thereof, or actual injury or the threat thereof, to the plaintiff, so long as a violation of this part is alleged and proven.

(Amended by Stats. 1992, c. 1298 (A.B.3526), § 41; Stats. 1993, c. 589(A.B.2211), § 95.)

§17060.2 Orders or notices of violations; vacating of accommodations; relocation ordinances; attorney's fees and costs; deferral of orders of abatement

(a) Notwithstanding any other provision of law, the operator of employee housing shall provide a resident of every unit in the employee housing with a written copy in English and Spanish of every order or notice of violation issued by an enforcement agency accompanied by an explanation of the owner's or operator's anticipated response to the order or notice. Each notice shall also advise the occupants of the right to a hardship deferral and the procedure for obtaining this, as set forth in subdivision (c). These copies may be provided by first-class mail or by posting a copy of the notice in a prominent place on each residential unit.

(b) (1) (A) The enforcement agency shall not require the vacating of all or any part of an accommodation unless it concurrently orders the operator to provide for the relocation of the tenants consistent with the requirements of Section 17062 prior to the date the vacating is required and requires expeditious demolition or repair to comply with this part, the building standards related to employee housing, or other rules and regulations adopted pursuant to this part. Any local government may, prior to January 1, 1994, enact a local relocation ordinance that imposes requirements more stringent than those contained in this section. The tenant or tenant association may enforce the relocation remedies of this section, and the enforcement agency, to the extent feasible, shall cooperate in these efforts. The enforcement agency may require vacation and demolition or itself vacate the building, repair or demolish the building, or institute any other appropriate action or proceeding, if either of the following occurs:

(i) The repair work is not done as scheduled or cannot be completed within a reasonable period of time.

(ii) There is a significant threat to the residents' or public health and safety.

(B) In any civil action brought by a private person or entity to obtain relocation assistance pursuant to subparagraph (A), following an enforcement agency's order to vacate all or any part of an accommodation, and the failure to comply with the agency's order to provide for the relocation of the tenants, the private person or entity, if he, she, or it is the prevailing party, may be granted reasonable attorney's fees and costs, in addition to any other remedy granted.

(2) Prior to vacating and demolishing the accommodation, the public agency shall exert every reasonable effort to obtain or cause repairs. In addition, to the extent feasible, if the public entity causes vacation of the accommodation, it shall cooperate in efforts to obtain compensation from the owner or operator to compensate the displaced residents for their relocation expenses, including rent differentials.

(c) The enforcement agency or a court of competent jurisdiction may, in cases of extreme hardship to tenants of employee housing, provide for deferral of the effective date of orders of abatement. Any deferral of the effective date of any order of abatement shall include conditions, including, but not limited to, payment of rent to an appropriate receiver, which will ensure progress towards correcting defects, or assist in relocation of tenants prior to closure of the employee housing.

(Added by Stats. 1986, c. 1495, § 7. Amended by Stats. 1992, c. 1298 (A.B.3526), § 42; Stats. 1993, c. 952 (A.B.2011), § 5; Stats. 1995, c. 91 (S.B.975), § 63.)

§17060.5 Transfer to third party; continuance of action or proceeding; subjection of new owner for correction

(a) The sale or other transfer of property to a third party shall not render moot an action or proceeding brought pursuant to this chapter and instituted by an enforcement agency against the owner of record on the date a citation for a violation of this part was issued.

(b) Any person who obtains an ownership interest in any property after a notice of an action or proceeding has been recorded with respect to the property pursuant to Section 17060, and where there has been no withdrawal of the notice, shall be subject to any order to correct a violation, including any time limitations, specified in a citation issued pursuant to Section 17060.

(Added by Stats. 1983, c. 1210, § 3.)

12. REGULATION OF BUILDINGS USED FOR HUMAN HABIATION

Health and Safety Code

§17910	Short title
§17911	Application of part
§17912	Application of rules, regulations and building standards to existing buildings
§17913	Uniform codes; notice of publication, approval and adoption; publication of information bulletins regarding enforcement; distribution of information
§17920	Definitions
§17920.3	Substandard building; conditions
§17920.5	Local appeals board
§17920.6	Housing appeals board
§17920.7	Repealed by Stats
§17920.8	Exit identification near floor
§17920.9	Building standards; fire safety and fire resistant regulations; foam building systems; approved testing agency
§17920.10	Lead hazards; violations; definitions
§17921	Building standards
§17921.1	Hotplates
§17921.3	Water closets, urinals, and associated flushometer valves; requirements, local enforcement
§17921.5	Repealed by Stats
§17921.7	ABS Plumbing pipe; manufacturing; use of approved resins and compounds; documentation; approval standards
§17921.9	CPVC plastic piping; alternative material; safe work practices
§17922	Administrative code rules and regulations; uniform housing code requirements; local requirements
§17922.1	Modification or change of regulation requirements; findings
§17922.2	Hazardous building ordinances and programs; building standards; local conditions; exceptions; study
§17922.3	Residential structure; movement into or within jurisdiction of local agency or the department; application of section 17958.9
§17922.5	Application for, and issuance of, building permit; prerequisites
§17922.6	Noise insulation standards requirements
§17922.7	Noise insulation standards; changes, modifications or additions by cities, counties and public entities
§17922.8	Advisory committee
§17922.9	Low and moderate income housing; FHA mortgage restriction on garage and house size; exemption from local requirements
§17923	Alternate materials and methods of construction; approval; tests to prove compliance
§17924	Promulgation of rules; adoption and submission of building standards
§17925	Opposition to building standards, rules or regulations; hearing; determination; filing
§17927	Garage door springs
§17930	Hearing
§17931	Rules pertaining to hearing appeals
§17932	Finality of decision
§17933	Repealed by Stats
§17934	Blank
§17935	Renumbered §17931
§17936	Blank
§17937, §17938	Renumbered §17930, §17932
§17939	Repealed by Stats
§17940	Repealed by Stats
§17941	Repealed by Stats
§17950	Apartment house, hotel and dwelling provisions
§17951	Local fees; alternate materials and construction methods; approval; evidence

§17952	Enforcement; notice to city or county of violation; hearing; assessment of fees
§17953	Preliminary soil report; ordinance requiring; waiver
§17954	Soil investigation by lot; necessity; preparation; recommendations
§17955	Approval; building permit conditions; appeal
§17956	Liability of public agency or employee
§17957	Alternate procedure
§17958	Adoption of regulations or ordinances imposing requirements in Section 17922 by governing body of cities and counties
§17958.1	Efficiency units
§17958.2	Limited density owner-built rural dwellings; regulations; findings prior to operative effect; local variances
§17958.4	Window security bars; safety release mechanisms; stats and local requirements; disclosure; application of ordinances
§17958.5	Local variances; annual report
§17958.7	Local variances; findings; filing; rejection of modification
§17958.8	Alterations and repairs; original materials and methods
§17958.9	Apartment houses and dwellings; movement; retention of existing materials and methods of construction
§17958.11	Alternative building regulations; joint living and work quarters; geographic areas
§17959	Consideration of proposed universal design guidelines for home construction or home modifications; enhancement of full life cycle use of housing without regard to physical abilities or disabilities of home's occupants or guests as part of state's guidelines or ordinances
§17959.1	Solar energy systems; ordinance to prohibit or to unreasonably restrict use; limitations
§17959.3	Passive solar energy design
§17959.4	Hardship cases; deferral of order of abatement
§17959.5	Variances
§17960	City or county building departments
§17960.1	Plan-checking; contract with employment of private entity
§17960.5	Residential building standards; application to approved projects
§17961	City or county housing or building department, or environmental agency; enforcement duties
§17961.5	Renumbered §17962
§17962	Fire protection provisions; enforcement
§17964	Designation of department or officer
§17965	Department of housing and community development
§17966	Contracts for assistance
§17967	Records and reports of local enforcement agencies; examination; copies
§17970	Authority to enter and inspect premises
§17971	Authority of owner to enter premises to carry out instruction or perform work
§17972	Limitations on authority to enter
§17980	Buildings in violation; notice to abate nuisance; instituting actions or proceedings; substandard buildings; repair or demolition; preferences; notice of violations; costs
§17980.1	Buildings hazardous to life in event of earthquake; retrofitting; conditions; noncompliance; notice; receiver; application; appointment; fees
§17980.2	Lien for costs; fee; contents; recording; expenses
§17980.3	Receiver; powers and duties; fees and commissions; discharge
§17980.4	Action for recovery of expenses incurred by enforcement agency; remedies; criminal and civil liability of owner
§17980.5	Special fund for implementation of §17980.1 to §17980.4
§17980.6	Violations; order or notice to repair, failure to correct; remedies of §17980.7 applicable
§17980.7	Failure of owner to comply within a reasonable time with terms of order or notice pursuant to §17980.6
§17980.8	Administrative determination of unsafe or substandard condition; abatement or other exercise of authority; owner exclusive remedy; judicial review standard; application of section

§17980.8	Jurisdiction to abate nuisance through repairs, razing or removal; expense statement; liability of property owner
§17980.9	City of Los Angeles or City of San Diego; inspection of vacant single-family dwellings; action to correct violations or abate nuisances; tax notice; reimbursement of costs
§17981	Temporary relief pending final judgment
§17982	Order to remove violation or abate nuisance
§17983	Powers of court
§17984	Liability for costs
§17985	Notice of pending action; effect; notice of final dispositions; recording
§17986	Recordation of notice
§17987	Vacation of notice
§17988	Service of summons
§17989	Service of notices and orders; time for service
§17990	Pleading in response to summons; time to file

§17910 Short title
This part is known as the "State Housing Law."

(Added by Stats. 1961, c. 1844, p. 3919, § 8.)

§17911 Application of part
The provisions of this part do not apply to any building regulated by Part 2 (commencing with Section 18000), Part 2.1 (commencing with Section 18200), or Part 6 (commencing with Section 19960) of this division, unless such parts specifically require such application.

(Added by Stats. 1961, c. 1844, p. 3919, § 8. Amended by Stats. 1965, c. 230, p. 1203, § 1; Stats. 1971, c. 438, p. 891, § 131.)

§17912 Application of rules, regulations and building standards to existing buildings
Rules and regulations promulgated pursuant to the provisions of this part and building standards published in the State Building Standards Code, relating to the erection or construction of buildings or structures, shall not apply to existing buildings or structures or to buildings or structures as to which construction is commenced or approved prior to the effective date of the rules, regulations, or building standards, except by act of the Legislature, but rules, regulations, and building standards relating to use, maintenance, and change of occupancy shall apply to all hotels, motels, lodginghouses, apartment houses, and dwellings, or portions thereof, and buildings and structures accessory thereto, approved for construction or constructed before or after the effective date of such rules, regulations, or building standards.

(Added by Stats. 1965, c. 152, p. 1107, § 2. Amended by Stats. 1974, c. 1268, p. 2750, § 1; Stats. 1979, c. 1152, p. 4255, § 59.)

§17913 Uniform codes; notice of publication, approval and adoption; publication of information bulletins regarding enforcement; distribution of information
(a) The department shall notify the entities listed in subdivision (c) of the dates that each of the uniform codes published by the specific organizations described in paragraphs (1) to (5), inclusive, of subdivision (a) of Section 17922 are approved by the California Building Standards Commission pursuant to Section 18930 and the effective date of the model codes as established by the California Building Standards Commission.

(b) The department may publish information bulletins regarding code enforcement as emergencies occur or at any other time the department determines appropriate.

(c) The department shall distribute the information described in subdivision (a), and may distribute the information described in subdivision (b), to the following entities:

(1) The building department in each county and city.

(2) Housing code officials, fire service officials, professional associations concerned with building standards, and any other persons or entities the department determines appropriate.

(Added by Stats. 1986, c. 90, § 1. Amended by Stats. 1997, c. 645 (A.B.1071), § 1.)

§17920 Definitions
As used in this part:

(a) "Approved" means acceptable to the department.

(b) "Building" means a structure subject to this part.

(c) "Building standard" means building standard as defined in Section 18909.

(d) "Department" means the Department of Housing and Community Development.

(e) "Enforcement" means diligent effort to secure compliance, including review of plans and permit applications, response to complaints, citation of violations, and other legal process. Except as otherwise provided in this part, "enforcement" may, but need not, include inspections of existing buildings on which no complaint or permit application has been filed, and effort to secure compliance as to these existing buildings.

(f) "Fire protection district" means any special district, or any other municipal or public corporation or district, which is authorized by law to provide fire protection and prevention services.

(g) "Labeled" means equipment or materials to which has been attached a label, symbol, or other identifying mark of an organization, approved by the department, that maintains a periodic inspection program of production of labeled products, installations, equipment, or materials and by whose labeling the manufacturer indicates compliance with appropriate standards or performance in a specified manner.

(h) "Listed" means all products that appear in a list published by an approved testing or listing agency.

(i) "Listing agency" means an agency approved by the department that is in the business of listing and labeling products, materials, equipment, and installations tested by an approved testing agency, and that maintains a periodic inspection program on current production of listed products, equipment, and installations, and that, at least annually, makes available a published report of these listings.

(j) "Noise insulation" means the protection of persons within buildings from excessive noise, however generated, originating within or without such buildings.

(k) "Nuisance" means any nuisance defined pursuant to Part 3 (commencing with Section 3479) of Division 4 of the Civil Code, or any other form of nuisance recognized at common law or in equity.

(l) "Public entity" has the same meaning as defined in Section 811.2 of the Government Code.

(m) "Testing agency" means an agency approved by the department as qualified and equipped for testing of products, materials, equipment, and installations in accordance with nationally recognized standards.

(Amended by Stats. 1993, c. 413 (A.B.765), § 1, eff. Sept. 21, 1993; Stats. 1997, c. 645 (A.B.1071), § 2.)

§17920.3 Substandard building; conditions
Any building or portion thereof including any dwelling unit, guestroom or suite of rooms, or the premises on which the same is located, in which there exists any of the following listed conditions to an extent that endangers the life, limb, health, property, safety, or welfare of the public or the occupants thereof shall be deemed and hereby is declared to be a substandard building:

(a) Inadequate sanitation shall include, but not be limited to, the following:

(1) Lack of, or improper water closet, lavatory, or bathtub or shower in a dwelling unit.

(2) Lack of, or improper water closets, lavatories, and bathtubs or showers per number of guests in a hotel.

(3) Lack of, or improper kitchen sink.

(4) Lack of hot and cold running water to plumbing fixtures in a hotel.

(5) Lack of hot and cold running water to plumbing fixtures in a dwelling unit.

(6) Lack of adequate heating.

(7) Lack of, or improper operation of required ventilating equipment.

(8) Lack of minimum amounts of natural light and ventilation required by this code.

(9) Room and space dimensions less than required by this code.

(10) Lack of required electrical lighting.

(11) Dampness of habitable rooms.

(12) Infestation of insects, vermin, or rodents as determined by the health officer.

(13) General dilapidation or improper maintenance.

(14) Lack of connection to required sewage disposal system.

(15) Lack of adequate garbage and rubbish storage and removal facilities as determined by the health officer.

(b) Structural hazards shall include, but not be limited to, the following:

(1) Deteriorated or inadequate foundations.

(2) Defective or deteriorated flooring or floor supports.

(3) Flooring or floor supports of insufficient size to carry imposed loads with safety.

(4) Members of walls, partitions, or other vertical supports that split, lean, list, or buckle due to defective material or deterioration.

(5) Members of walls, partitions, or other vertical supports that are of insufficient size to carry imposed loads with safety.

(6) Members of ceilings, roofs, ceilings and roof supports, or other horizontal members which sag, split, or buckle due to defective material or deterioration.

(7) Members of ceiling, roofs, ceiling and roof supports, or other horizontal members that are of insufficient size to carry imposed loads with safety.

(8) Fireplaces or chimneys which list, bulge, or settle due to defective material or deterioration.

(9) Fireplaces or chimneys which are of insufficient size or strength to carry imposed loads with safety.

(c) Any nuisance.

(d) All wiring, except that which conformed with all applicable laws in effect at the time of installation if it is currently in good and safe condition and working properly.

(e) All plumbing, except plumbing that conformed with all applicable laws in effect at the time of installation and has been maintained in good condition, or that may not have conformed with all applicable laws in effect at the time of installation but is currently in good and safe condition and working properly, and that is free of cross connections and siphonage between fixtures.

(f) All mechanical equipment, including vents, except equipment that conformed with all applicable laws in effect at the time of installation and that has been maintained in good and safe condition, or that may not have conformed with all applicable laws in effect at the time of installation but is currently in good and safe condition and working properly.

(g) Faulty weather protection, which shall include, but not be limited to, the following:

(1) Deteriorated, crumbling, or loose plaster.

(2) Deteriorated or ineffective waterproofing of exterior walls, roof, foundations, or floors, including broken windows or doors.

(3) Defective or lack of weather protection for exterior wall coverings, including lack of paint, or weathering due to lack of paint or other approved protective covering.

(4) Broken, rotted, split, or buckled exterior wall coverings or roof coverings.

(h) Any building or portion thereof, device, apparatus, equipment, combustible waste, or vegetation that, in the opinion of the chief of the fire department or his deputy, is in such a condition as to cause a fire or explosion or provide a ready fuel to augment the spread and intensity of fire or explosion arising from any cause.

(i) All materials of construction, except those which are specifically allowed or approved by this code, and which have been adequately maintained in good and safe condition.

(j) Those premises on which an accumulation of weeds, vegetation, junk, dead organic matter, debris, garbage, offal, rodent harborages, stagnant water, combustible materials, and similar materials or conditions constitute fire, health, or safety hazards.

(k) Any building or portion thereof that is determined to be an unsafe building due to inadequate maintenance, in accordance with the latest edition of the Uniform Building Code.

(l) All buildings or portions thereof not provided with adequate exit facilities as required by this code, except those buildings or portions thereof whose exit facilities conformed with all applicable laws at the time of their construction and that have been adequately maintained and increased in relation to any increase in occupant load, alteration or addition, or any change in occupancy.

When an unsafe condition exists through lack of, or improper location of, exits, additional exits may be required to be installed.

(m) All buildings or portions thereof that are not provided with the fire-resistive construction or fire-extinguishing systems or equipment required by this code, except those buildings or portions thereof that conformed with all applicable laws at the time of their construction and whose fire-resistive integrity and fire-extinguishing systems or equipment have been adequately maintained and improved in relation to any increase in occupant load, alteration or addition, or any change in occupancy.

(n) All buildings or portions thereof occupied for living, sleeping, cooking, or dining purposes that were not designed or intended to be used for those occupancies.

(o) Inadequate structural resistance to horizontal forces.

"Substandard building" includes a building not in compliance with Section 13143.2.

However, a condition that would require displacement of sound walls or ceilings to meet height, length, or width requirements for ceilings, rooms, and dwelling units shall not by itself be considered sufficient existence of dangerous conditions making a building a substandard building, unless the building was constructed, altered, or converted in violation of those requirements in effect at the time of construction, alteration, or conversion.

(Amended by Stats. 2000, c. 471 (A.B.2008), § 4.)

§17920.5 Local appeals board

As used in this part "local appeals board" means the board or agency of a city or county which is authorized by the governing body of the city or county to hear appeals regarding the building requirements of the city or county. In any area in which there is no such board or agency, "local appeals board" means the governing body of the city or county having jurisdiction over such area.

(Added by Stats. 1961, c. 18447, p. 3920, § 8.)

§17920.6 Housing appeals board

As used in this part, "housing appeals board" means the board or agency of a city or county which is authorized by the governing body of the city or county to hear appeals regarding the requirements of the city or county relating to the use, maintenance, and change of occupancy of hotels, motels, lodginghouses, apartment houses, and dwellings, or portions thereof, and buildings and structures accessory thereto, including requirements governing alteration, additions, repair, demolition, and moving of such buildings if also authorized to hear such appeals. In any area in which there is not such a board or agency, "housing appeals board" means the local appeals board having jurisdiction over such area.

(Added by Stats. 1977, c. 847, p. 2547, § 2.)

§17920.7 Repealed by Stats. 1990, c. 1083 (S.B.1830), § 6; Stats. 1990, c. 1111 (A.B.2666), § 6

§17920.8 Exit identification near floor

In addition to any other requirements for location of exit signs or devices in hotels, motels, or apartment houses, the State Fire Marshal shall adopt building standards establishing minimum requirements for the placement of distinctive devices, signs, or other means that identify exits and can be felt or seen near the floor. Exit sign technologies permitted by the model building code upon which the California Building Standards Code is based, shall be permitted. These building standards shall apply to all newly constructed occupancies subject to this section for which a building permit is issued, or construction is commenced, where no building permit is issued on or after January 1, 1989.

(Added by Stats. 1987, c. 401, § 2. Amended by Stats. 1997, c. 871 (S.B.1040), § 2.)

§17920.9 Building standards; fire safety and fire resistant regulations; foam building systems; approved testing agency

(a) The department shall propose adoption, amendment, or repeal by the California Building Standards Commission pursuant to Chapter 4 (commencing with Section 18935) of Part 2.5, of those regulations as are necessary for the provision of minimum fire safety and fire-resistant standards relating to the manufacture, composition, and use of foam building systems manufactured for use, or used, in construction of buildings subject to this part, mobilehomes subject to Part 2 (commencing with Section 18000), or factory-built housing subject to Part 6 (commencing with Section 19960), for the protection of the health and safety of persons occupying those buildings, mobilehomes, or factory-built housing. The department shall enforce building standards published in the California Building Standards Code relating to foam building systems, and other rules and regulations adopted by the department or by federal law. Each manufacturer of foam building systems shall have any foam building system manufactured for use in any building, factory-built housing, or mobilehome listed and labeled by an approved testing agency certifying that the system meets fire safety and fire-resistant building standards published in the California Building Standards Code. The department shall consult with all available public and private sources to assist in the development of the building standards and other rules and regulations.

(b) The department shall make inspections of the manufacture of such foam building systems which it determines are necessary to insure compliance with the requirements of subdivision (a).

(c) No person shall sell, offer for sale, or use in construction of buildings subject to this part, mobilehomes subject to Part 2 (commencing with Section 18000), or factory-built housing subject to Part 6 (commencing with Section 19960), in this state, any foam building system, and no person shall sell or offer for sale in this state any such building, mobilehome, or factory-built housing of which a foam building system is a component, which foam building system does not comply with, or has not been listed and labeled by an approved testing agency certifying that the foam building system is in compliance with, the requirements of subdivision (a) on and after the 180th day after the building standards or other rules or regulations become effective.

This subdivision shall not apply to any buildings, mobilehomes, or factory-built housing constructed prior to the 180th day after those standards become effective.

(d) No person shall sell, offer for sale, or use in construction of any building subject to this part, a mobilehome subject to Part 2 (commencing with Section 18000), or factory-built housing subject to Part 6 (commencing with Section 19960), in this state, any foam building system, and no person shall sell or offer for sale in this state any such building, mobilehome, or factory-built housing of which a foam building system is a component, if the manufacturer thereof refuses to permit the department to conduct the inspections required by subdivision (b) on and after the 180th day after the building standards or other rules or regulations become effective.

(e) As used in this section:

(1) "Foam" means a material made by mixing organic polymers with air or other gases in a manner that forms a solid substance with holes filled with air or gas when the mixture is allowed to set.

(2) "Foam building system" means a system of building materials composed of, in whole or in part, of foam. It includes, but is not limited to, all combinations of systems such as those composed of foam inserted between and bonded to two boundary surface materials or those composed exclusively of foam.

(3) "Building standard" means building standard as defined in Section 18909.

(Amended by Stats. 1997, c. 645 (A.B.1071), § 3.)

§17920.10 Lead hazards; violations; definitions

(a) Any building or portion thereof including any dwelling unit, guestroom, or suite of rooms, or portion thereof, or the premises on which it is located, is deemed to be in violation of this part as to any portion that contains lead hazards. For purposes of this part, "lead hazards" means deteriorated lead-based paint, lead-contaminated dust, lead-contaminated soil, or disturbing lead-based paint without containment, if one or more of these hazards are present in one or more locations in amounts that are equal to or exceed the amounts of lead established for these terms in Chapter 8 (commencing with Section 35001) of Division 1 of Title 17 of the California Code of Regulations or by this section and that are likely to endanger the health of the public or the occupants thereof as a result of their proximity to the public or the occupants thereof.

(b) In the absence of new regulations adopted by the State Department of Health Services in accordance with the rulemaking provisions of the Administrative Procedure Act (Chapter 3.5 (commencing with Section 11340) of Part 1 of Division 3 of Title 2 of the Government Code) further interpreting or clarifying the terms "deteriorated lead-based paint," "lead-based paint," "lead-contaminated dust," "containment," or "lead-contaminated soil," regulations in Chapter 8 (commencing with Section 35001) of Division 1 of Title 17 of the California Code of Regulations adopted by the State Department of Health Services pursuant to Sections 105250 and 124150 shall interpret or clarify these terms. If the State Department of Health Services adopts new regulations defining these terms, the new regulations shall supersede the prior regulations for the purposes of this part.

(c) In the absence of new regulations adopted by the State Department of Health Services in accordance with the rulemaking provisions of the Administrative Procedure Act defining the term "disturbing lead-based paint without containment" or modifying the term "deteriorated lead-based paint," for purposes of this part "disturbing

lead-based paint without containment" and "deteriorated lead-based paint" shall be considered lead hazards as described in subdivision (a) only if the aggregate affected area is equal to or in excess of one of the following:

(1) Two square feet in any one interior room or space.

(2) Twenty square feet on exterior surfaces.

(3) Ten percent of the surface area on the interior or exterior type of component with a small surface area. Examples include window sills, baseboards, and trim.

(d) Notwithstanding subdivision (c), "disturbing lead-based paint without containment" and "deteriorated lead-based paint" shall be considered lead hazards, for purposes of this part, if it is determined that an area smaller than those specified in subdivision (c) is associated with a person with a blood lead level equal to or greater than 10 micrograms per deciliter.

(e) If the State Department of Health Services adopts regulations defining or redefining the terms "deteriorated lead-based paint," "lead-contaminated dust," "lead-contaminated soil," "disturbing lead-based paint without containment," "containment," or "lead-based paint," the effective date of the new regulations shall be deferred for a minimum of three months after their approval by the Office of Administrative Law and the regulations shall take effect on the next July 1 or January 1 following that three-month period. Until the new definitions apply, the prior definition shall apply.

(Added by Stats. 2002, c. 931 (S.B.460), § 1.5.)

§17921 Building standards

(a) Except as provided in subdivision (b), the department shall propose the adoption, amendment, or repeal of building standards to the California Building Standards Commission pursuant to the provisions of Chapter 4 (commencing with Section 18935) of Part 2.5, and the department shall adopt, amend, and repeal other rules and regulations for the protection of the public health, safety, and general welfare of the occupant and the public governing the erection, construction, enlargement, conversion, alteration, repair, moving, removal, demolition, occupancy, use, height, court, area, sanitation, ventilation and maintenance of all hotels, motels, lodging houses, apartment houses, and dwellings, and buildings and structures accessory thereto. Except as otherwise provided in this part, the department shall enforce those building standards and those other rules and regulations. The other rules and regulations adopted by the department may include a schedule of fees to pay the cost of enforcement by the department under Sections 17952 and 17965.

(b) The State Fire Marshal shall adopt, amend, or repeal and submit building standards for approval pursuant to the provisions of Chapter 4 (commencing with Section 18935) of Part 2.5, and the State Fire Marshal shall adopt, amend, and repeal other rules and regulations for fire and panic safety in all hotels, motels, lodging houses, apartment houses and dwellings, buildings, and structures accessory thereto. These building standards and regulations shall be enforced pursuant to Sections 13145 and 13146; however, this section is not intended to require an inspection by a local fire agency of each single-family dwelling prior to its occupancy.

(Amended by Stats. 1997, c. 645 (A.B.1071), § 4.)

§17921.1 Hotplates

Notwithstanding the provisions of Section 17921, and except as provided for herein, the department shall not adopt or enforce any rule or regulation relating to the installation, maintenance, or use of a hotplate in a room of any building occupied on or prior to the effective date of this act, if all of the following conditions exist:

(a) The hotplate is used solely for the cooking or preparation of meals for consumption by not more than two occupants of the room.

(b) The hotplate contains not more than two burners or heating elements, and has been approved by a testing agency acceptable to the department.

(c) The installation, maintenance, or use of a hotplate will not be, or is not, hazardous to life or property.

(d) The hotplate rests on its own legs, is set not closer than six inches from any wall or projection thereof, and rests on an impervious surface.

(e) The walls behind and adjacent to the hotplate are lined or backflashed with incombustible material equivalent to one-fourth-inch asbestos millboard; the backflashing extends from 12 inches below to 24 inches above the base of the hotplate; and there is 36 inches of clear and unobstructed space above the surface of the hotplate.

(f) The area of such room is not less than 120 square feet in superficial floor area.

(g) The room contains an approved sink with hot and cold running water.

(h) All plumbing in the room complies with the provisions of this part and building standards published in the State Building Standards Code.

(i) An approved storage cabinet is installed in the room wherein all food, dishes, and cooking and eating utensils are stored when not in use.

(j) The bed, and any drapes, curtains, towels, or other readily combustible materials, in the room are located so that they do not come in contact with the hotplate.

(k) The room complies with the provisions of this part and building standards published in the State Building Standards Code pertaining to window area, ventilation, ceiling height, and cubic airspace.

(l) An approved method of heating is installed in or for the room and the hotplate is not used for the purpose of heating the room or installed within an unventilated area.

(m) Toilet and bath facilities are installed and maintained in the building as required by this part and building standards published in the State Building Standards Code.

In the event of any structural addition or any alteration or reconstruction involving the floor area of any room the provisions of Section 17921 shall apply.

Any city or county may enact an ordinance to prohibit the installation, maintenance, or use of a hotplate in any room.

"Approved," when used in connection with any material, type of construction, or appliance in this section, means meeting the approval of the enforcement agency as the result of investigation and tests conducted by the agency or by reason of accepted principles or tests by national authorities, technical, health, or scientific organizations or agencies.

(Added by Stats. 1963, c. 696, p. 1704, § 1. Amended by Stats. 1979, c. 1152, p. 4260, § 64.)

§17921.3 Water closets, urinals, and associated flushometer valves; requirements, local enforcement

(a) All new buildings constructed in this state shall use water closets and associated flushometer valves, if any, which use no more than an average of 1.6 gallons per flush and which meet performance standards established by American Society of Mechanical Engineers standards A112.19.2-1990 and A112.19.6-1990, and urinals and associated flushometer valves, if any, which use no more than an average of one gallon per flush and which meet performance standards established by American Society of Mechanical Engineers standards A112.19.2-1990 and A112.19.6-1990.

(b) Any city, county, or city and county may enact an ordinance to allow the sale and installation of non-low-consumption water closets or urinals upon its determination that the unique configuration of building drainage systems or portions of a public sewer system within the jurisdiction, or both, requires a greater quantity of water to flush the system in a manner consistent with public health. At the request of a public agency providing sewer services within the jurisdiction, the city, county, or city and county shall hold a public hearing on the need for an ordinance as provided in this subdivision. Prior to this hearing or to the enactment of the ordinance, those agencies responsible for the provision of water and sewer services within the jurisdiction, if other than the agency

considering adoption of the ordinance, shall be given at least 30 days' notice of the meeting at which the ordinance may be considered or adopted.

(c) On and after January 1, 1994, all water closets sold or installed in this state shall be water closets and associated flushometer valves, if any, which use no more than an average of 1.6 gallons per flush and which meet performance standards established by American Society of Mechanical Engineers standards A112.19.2-1990 and A112.19.6-1990, and urinals and associated flushometer valves, if any, which use no more than an average of one gallon per flush and which meet performance standards established by American Society of Mechanical Engineers standards A112.19.2-1990 and A112.19.6-1990. Blowout water closets and associated flushometer valves are exempt from the flush volume requirements of this section.

(d) Notwithstanding subdivision (c), on and after January 1, 1994, water closets and urinals which do not meet the standards referenced in subdivision (c) may be sold or installed for use only under either of the following circumstances:

(1) Installation of the water closet or urinal to comply with the standards referenced in subdivision (c) would require modifications to plumbing system components located beneath a finished wall or surface.

(2) The non-low-consumption water closets, urinals, and flushometer valves, if any, would be installed in a home or building which has been identified by a local, state, or federal government entity as a historical site, and historically accurate water closets and urinals that comply with the flush volumes specified in subdivision (c) are not available.

(e) **(1)** On and after January 1, 1994, all water closets and urinals sold for installation, or installed, shall be labeled, on both fixture and container, in accordance with their consumption classification and the average water consumption, measured in gallons, for that classification. The fixture label shall be intended for removal by the purchaser only, and shall so state on the label.

(2) The wording on the label shall include, but not necessarily be limited to, the following:

"This fixture qualifies according to ASME test procedures as a low-consumption water closet/urinal with an average consumption flush of 1.6 gallons or less/1.0 gallon or less."

(f) **(1)** This section shall not be construed to preempt any actions of cities, counties, cities and counties, or districts which prescribe additional or more restrictive conservation requirements affecting the sale, installation, or use of low-consumption water closets, urinals, and flushometer valves that meet the standards referenced in subdivision (c), or affecting the continued use of non-low-consumption water closets, urinals, and flushometer valves installed prior to January 1, 1994, that shall result in greater savings of water than would result under this section.

(2) This section shall not be construed as granting any new or additional powers to cities, counties, cities and counties, or districts to promulgate or establish laws, ordinances, regulations, or rules governing the sale, installation, or use of low-consumption water closets, urinals, and flushometer valves.

(g) As used in this section, "non-low-consumption flushometer valve," "non-low-consumption urinal," and "non-low-consumption water closet" shall refer to devices which do not meet the standards referenced in subdivision (c).

(Amended by Stats. 1989, c. 1029, § 1; Stats. 1992, c. 1347 (S.B.1224), § 1.)

§17921.5 Repealed by Stats. 1984, c. 888, § 1

§17921.7 ABS Plumbing pipe; manufacturing; use of approved resins and compounds; documentation; approval standards

(a) (1) The Legislature finds and declares all of the following:

(A) Acrylonitrile-butadiene-styrene ("ABS") drain, waste, and vent plumbing pipe is used to drain or vent wastewater from kitchens, bathrooms, washers, and plumbing fixtures found in the home. ABS pipe is commonly used in residential construction, and ABS pipe has been installed in the foundations and walls of thousands of single-family homes, apartments, condominiums, and other residences throughout California.

(B) The American Society for Testing and Materials (ASTM) has established specifications for the manufacture of ABS pipe, including a requirement that ABS pipe be made from virgin plastic resin. These specifications have been incorporated into the Uniform Plumbing Code (UPC), which is applicable to all occupancies throughout the state pursuant to subdivision (b) of Section 18938, a provision of the California Building Standards Law (Part 2.5 (commencing with Section 18901)).

(C) ABS pipe that does not meet ASTM requirements might, within a period of a decade or less, crack and leak wastewater and sewage, resulting in structural damage, vermin infestation, and severe health hazards for residents or occupants of buildings in which defectively manufactured ABS pipe has failed. One apparent cause of these mechanical failures of ABS pipe has been the use of nonvirgin, reprocessed plastic resin for the manufacture of ABS pipe.

(D) The continued use of this nonvirgin, reprocessed plastic resin by some ABS pipe manufacturers violates the requirements of the UPC and is also in violation of the building standards established in accordance with the California Building Standards Law. The problem of the property damage inflicted on the public continues to worsen.

(E) Thousands of California residents either already have, or eventually will, experience serious damage to their homes, apartments, and condominiums, as well as threats to their health and safety, because of the substandard ABS pipe that has been installed, in violation of building standards, in structures throughout the state.

(F) There are currently no statutes or regulations that apply to the sale of defective plastic resin to ABS pipe manufacturers.

(2) It is, therefore, the intent of the Legislature that both of the following occur:

(A) That a provision that addresses the important issues set forth in paragraph (1) be added to the State Housing Law.

(B) That the Department of Housing and Community Development expeditiously implement the provisions of Chapter 413 of the Statutes of 1993 that relate to this section.

(b) On and after the effective date of the act that adds this section, no person shall sell or offer for sale a plastic resin for use in the manufacture of ABS DWV pipe that does not meet the requirements of the listing pursuant to authority granted by subdivision (e).

(c) (1) Any and all plastic resin sold to an ABS DWV pipe manufacturer for use in ABS DWV pipe shall contain a certification that the plastic resin conforms to the requirements specified in the listing pursuant to subdivision (e).

(2) Any and all plastic resin sold to an ABS pipe manufacturer shall be accompanied by a document indicating the name and address of the manufacturer of that plastic resin, the date that the plastic resin was purchased by the seller, and specifications of the chemical and physical properties of the plastic resin. For a period of at least 10 years from the date of the sale of this plastic resin, the information required to be certified by this subdivision shall be kept onsite at the ABS pipe manufacturing plant, and available for inspection by the enforcement agency, at all times.

(d) No ABS DWV pipe that contains plastic resin that does not meet the requirements of the listing pursuant to subdivision (e) may be sold or offered for sale, or installed in any structure that is subject to this part.

(e) The listing agencies, as approved by the department, shall publish in each listing agreement with ABS DWV pipe manufacturers a list of ABS resins and resin compounds used by that manufacturer and approved for use by the listing agency. The approval of ABS resins and resin compounds shall be based on nationally recognized standards. The listing agencies shall consult with the affected parties.

(Added by Stats. 1994, c. 990 (S.B.1873), § 1. Amended by Stats. 1997, c. 580 (S.B.320), § 4.)

§17921.9 CPVC plastic piping; alternative material; safe work practices

(a) The Legislature finds and declares all of the following:

(1) The deterioration of copper piping has become a serious problem in various communities in the state.

(2) Chlorinated polyvinyl chloride (CPVC) plastic piping has been successfully used for many years in other states and in nations around the globe, and has also been widely used, in accordance with federal regulations, in mobilehome construction.

(3) The Department of Community Development of the City of Colton, acting pursuant to a good-faith belief that it was in compliance with state regulations, approved the use of CPVC piping as an alternative to copper piping in early 1993 when the department was confronted with widespread deterioration of copper piping systems in a tract in the western part of that city.

(4) The retrofitting of homes in Colton with CPVC piping has been successful.

(b) It is, therefore, the intent of the Legislature in enacting this section to allow the use of CPVC piping in building construction in California as an alternate material under specified conditions.

(c) Notwithstanding any other provision of law, the provisions of the California Plumbing Code that do not authorize the use of CPVC piping within California shall not apply to any local government that permitted the use of CPVC piping for potable water systems within its jurisdiction prior to January 1, 1996. Any local government that permitted the use of CPVC piping for potable water systems within its jurisdiction prior to January 1, 1996, shall require both of the following:

(1) That the CPVC piping to be used is listed as an approved material in, and is installed in accordance with, the 1994 edition of the Uniform Plumbing Code.

(2) That all installations of CPVC strictly comply with the interim flushing procedures and worker safety measures set forth in subdivisions (d) and (e).

(d) The following safe work practices shall be adhered to when installing both CPVC and copper plumbing pipe in California after the effective date of the act that adds this section:

(1) **(A)** Employers shall provide education and training to inform plumbers of risks, provide equipment and techniques to help reduce exposures from plumbing pipe installation, foster safe work habits, and post signs to warn against the drinking of preoccupancy water.

(B) For purposes of this paragraph, "training" shall include training in ladder safety, safe use of chain saws and wood-boring tools, hazards associated with other construction trades, hazards from molten solder and flux, and the potential hazards and safe use of soldering tools and materials.

(2) Cleaners shall be renamed as primers, include strong warnings on the hazards of using primers as cleaners, and include dyes to discourage use as cleaners.

(3) Applicators and daubers shall be limited to small sizes.

(4) Enclosed spaces shall be ventilated with portable fans when installing CPVC pipe.

(5) Protective impermeable gloves shall be utilized when installing CPVC pipe.

(6) Employers shall provide onsite portable eyewash stations for all employees to allow for immediate flushing of eyes in the event of splashing of hot flux.

(7) Employers using acetylene torches shall ensure that the acetylene tanks are regularly maintained and inspected in accordance with applicable regulatory requirements. Fire extinguishers shall be kept in close proximity to the workplace.

(e) All of the following flushing procedures shall be adhered to when installing CPVC pipe in California after the effective date of the act that adds this section:

(1) When plumbing is completed and ready for pressure testing, each cold water and hot water tap shall be flushed starting with the fixture (basin, sink, tub, or shower) closest to the water meter and continuing with each successive fixture, moving toward the end of the system. Flushing shall be continued for at least one minute or longer until water appears clear at each fixture. This step may be omitted if a jurisdiction requires the building inspector to test each water system.

(2) The system shall be kept filled with water for at least one week and then flushed in accordance with the procedures set forth is [1] paragraph (1). The system shall be kept filled with water and not drained.

(3) Before the premises are occupied, the hot water heater shall be turned on and the system shall be flushed once more. Commencing with the fixture closest to the hot water heater, the hot water tap shall be permitted to run until hot water is obtained. The time required to get hot water in a specific tap shall be determined and then the cold water tap at the same location shall be turned on for the same period of time. This procedure shall be repeated for each fixture in succession toward the end of the system.

(f) Nothing in this section shall be construed to affect the applicability of any existing law imposing liability on a manufacturer, distributor, retailer, installer, or any other person or entity under the laws of this state for liability.

(g) This section shall not be operative after January 1, 1998.

(Added by Stats. 1995, c. 785 (A.B.151), § 1, eff. Oct. 12, 1995.)

[1] So in enrolled bill.

§17922 Administrative code rules and regulations; uniform housing code requirements; local requirements

(a) Except as otherwise specifically provided by law, the building standards adopted and submitted by the department for approval pursuant to Chapter 4 (commencing with Section 18935) of Part 2.5, and the other rules and regulations that are contained in Title 24 of the California Code of Regulations, as adopted, amended, or repealed from time to time pursuant to this chapter shall be adopted by reference, except that the building standards and rules and regulations shall include any additions or deletions made by the department. The building standards and rules and regulations shall impose substantially the same requirements as are contained in the most recent editions of the following uniform industry codes as adopted by the organizations specified:

(1) The Uniform Housing Code of the International Conference of Building Officials, except its definition of "substandard building."

(2) The Uniform Building Code of the International Conference of Building Officials.

(3) The Uniform Plumbing Code of the International Association of Plumbing and Mechanical Officials.

(4) The Uniform Mechanical Code of the International Conference of Building Officials and the International Association of Plumbing and Mechanical Officials.

(5) The National Electrical Code of the National Fire Protection Association.

(6) Appendix Chapter 1 of the Uniform Code for Building Conservation of the International Conference of Building Officials.

(b) In adopting building standards for approval pursuant to Chapter 4 (commencing with Section 18935) of Part 2.5 for publication in the California Building Standards Code and in adopting other regulations, the department shall consider local conditions and any amendments to the uniform codes referred to in this section. Except as provided in Part 2.5 (commencing with Section 18901), in the absence of adoption by regulation, the most recent editions of the uniform codes referred to in this section shall be considered to be adopted one year after the date of publication of the uniform codes.

(c) Except as provided in Section 17959.5, local use zone requirements, local fire zones, building setback, side and rear yard requirements, and property line requirements are hereby specifically and entirely reserved to the local jurisdictions notwithstanding any requirements found or set forth in this part.

(d) Regulations other than building standards which are adopted, amended, or repealed by the department, and building standards adopted and submitted by the department for approval pursuant to Chapter 4 (commencing with Section 18935) of Part 2.5, governing alteration and repair of existing buildings and moving of apartment houses and dwellings shall permit the replacement, retention, and extension of original materials and the continued use of original methods of construction as long as the hotel, lodginghouse, motel, apartment house, or dwelling, or portions thereof, or building and structure accessory thereto, complies with the provisions published in the California Building Standards Code and the other rules and regulations of the department or alternative local standards adopted pursuant to subdivision (b) of Section 13143.2 or Section 17958.5 and does not become or continue to be a substandard building. Building additions or alterations which increase the area, volume, or size of an existing building, and foundations for apartment houses and dwellings moved, shall comply with the requirements for new buildings or structures specified in this part, or in building standards published in the California Building Standards Code, or in the other rules and regulations adopted pursuant to this part. However, the additions and alterations shall not cause the building to exceed area or height limitations applicable to new construction.

(e) Regulations other than building standards which are adopted by the department and building standards adopted and submitted by the department for approval pursuant to Chapter 4 (commencing with Section 18935) of Part 2.5 governing alteration and repair of existing buildings shall permit the use of alternate materials, appliances, installations, devices, arrangements, or methods of construction if the material, appliance, installation, device, arrangement, or method is, for the purpose intended, at least the equivalent of that prescribed in this part, the building standards published in the California Building Standards Code, and the rules and regulations promulgated pursuant to the provisions of this part in performance, safety, and for the protection of life and health. Regulations governing abatement of substandard buildings shall permit those conditions prescribed by Section 17920.3 which do not endanger the life, limb, health, property, safety, or welfare of the public or the occupant thereof.

(f) A local enforcement agency may not prohibit the use of materials, appliances, installations, devices, arrangements, or methods of construction specifically permitted by the department to be used in the alteration or repair of existing buildings, but those materials, appliances, installations, devices, arrangements, or methods of construction may be specifically prohibited by local ordinance as provided pursuant to Section 17958.5.

(g) A local ordinance may not permit any action or proceeding to abate violations of regulations governing maintenance of existing buildings, unless the building is a substandard building or the violation is a misdemeanor.

(Amended by Stats. 1984, c. 908, § 1; Stats. 1991, c. 173 (A.B.204), § 1; Stats. 2001, c. 159 (S.B.662), § 129.)

§17922.1 Modification or change of regulation requirements; findings

Notwithstanding Section 17922, local agencies may modify or change the requirements published in the State Building Standards Code or contained in other regulations adopted by the department pursuant to Section 17922 if they make a finding that temporary housing is required for use in conjunction with a filed mining claim on federally owned property located within the local jurisdiction and that the modification or change would be in the

public interest and consistent with the intent of the so-called Federal Mining Act of 1872 (see 30 U.S.C., Sec. 22, et seq.)[1], relating to the development of mining resources of the United States.

(Added by Stats. 1974, c. 1383, p. 3007, § 1. Amended by Stats. 1979, c. 1152, p. 4264, § 67; Stats. 1983, c. 101, § 128.)

[1]30 U.S.C.A. § 22 et seq.

§17922.2 Hazardous building ordinances and programs; building standards; local conditions; exceptions; study

(a) Notwithstanding any other provisions of this part, ordinances and programs adopted on or before January 1, 1993, that contain standards to strengthen potentially hazardous buildings pursuant to subdivision (b) of Section 8875.2 of the Government Code, shall incorporate the building standards in Appendix Chapter 1 of the Uniform Code for Building Conservation of the International Conference of Building Officials published in the California Building Standards Code, except for standards found by local ordinance to be inapplicable based on local conditions, as defined in subdivision (b), or based on an approved study pursuant to subdivision (c), or both. Ordinances and programs shall be updated in a timely manner to reflect changes in the model code, and more frequently if deemed necessary by local jurisdictions.

(b) For the purpose of subdivision (a), and notwithstanding the meaning of "local conditions" as used elsewhere in this part and in Part 2.5 (commencing with Section 18901), the term "local conditions" shall be limited to those conditions that affect the implementation of seismic strengthening standards on the following only:

(1) The preservation of qualified historic structures as governed by the State Historical Building Code (Part 2.7 (commencing with Section 18950)).

(2) Historic preservation programs, including, but not limited to, the California Mainstreet Program.

(3) The preservation of affordable housing.

(c) Any ordinance or program adopted on or before January 1, 1993, may include exceptions for local conditions not defined in subdivision (b) if the jurisdiction has approved a study on or before January 1, 1993, describing the effects of the exceptions. The study shall include socioeconomic impacts, a seismic hazards assessment, seismic retrofit cost comparisons, and earthquake damage estimates for a major earthquake, including the differences in costs, deaths, and injuries between full compliance with Appendix Chapter 1 of the Uniform Code for Building Conservation or the Uniform Building Code and the ordinance or program. No study shall be required pursuant to this subdivision if the exceptions for local conditions not defined in subdivision (b) result in standards or requirements that are more stringent than those in Appendix Chapter 1 of the Uniform Code for Building Conservation.

(d) Ordinances and programs adopted pursuant to this section shall conclusively be presumed to comply with the requirements of Chapter 173 of the Statutes of 1991.

(Formerly §17922.1, added by Stats. 1992, c. 346 (A.B.2358), § 1. Amended by Stats. 1993, c. 1294 (A.B.1904), § 1, eff. Oct. 11, 1993. Renumbered §17922.2 and amended by Stats. 1994, c. 146 (A.B.3601), § 107; Stats. 1994, c. 1219 (S.B.1988), § 1.)

§17922.3 Residential structure; movement into or within jurisdiction of local agency or the department; application of section 17958.9

Notwithstanding any other provision of law, a residential structure that is moved into, or within, the jurisdiction of a local agency or the department, shall not be treated, for the purposes of Section 104 of the 1991 Edition of the Uniform Building Code, as a new building or structure, but rather shall be treated, for the purposes of this part, as subject to Section 17958.9.

(Added by Stats. 1993, c. 288 (A.B.1736), § 1, eff. July 30, 1993.)

§17922.5 Application for, and issuance of, building permit; prerequisites

Any state or local agency which issues building permits shall require, as a condition of issuing any building permit where the working conditions of the construction would require an employer to obtain a permit from the Division of

Occupational Safety and Health pursuant to Chapter 6 (commencing with Section 6500) of Part 1 of Division 5 of the Labor Code, that proof be submitted showing that the employer has received such a permit from the Division of Occupational Safety and Health.

An employer may apply for a building permit prior to receiving the permit from the Division of Occupational Safety and Health.

(Added by Stats. 1976, c. 33, p. 59, § 3, eff. March 6, 1976. Amended by Stats. 1981, c. 714, p. 2686, § 236; Stats. 1982, c. 1464, § 1.)

§17922.6 Noise insulation standards requirements

(a) The Office of Noise Control in coordination with the department shall adopt and submit building standards for approval pursuant to Chapter 4 (commencing with Section 18934) of Part 2.5 of this division and shall adopt, amend, and repeal rules and regulations other than building standards which establish uniform minimum noise insulation requirements for hotels, motels, apartment houses, and dwellings other than detached single-family dwellings.

(b) Such requirements shall be based on performance in order to require compliance onsite where the hotel, motel, apartment house, or dwelling other than a detached single-family dwelling, is located.

(c) Such requirements shall be sufficient to protect persons within the hotel, motel, apartment house, or dwelling other than a detached single-family dwelling, from the effects of excessive noise, including, but not limited to, hearing loss or impairment and persistent interference with speech and sleep.

(d) The provisions of this section, the building standards published in the State Building Standards Code relating to noise insulation, and the other rules and regulations adopted pursuant to this section shall apply equally to those hotels, motels, apartment houses, and dwellings other than detached single-family dwellings, owned, operated, or maintained by any public entity. The department shall enforce such building standards published in the State Building Standards Code and such other rules and regulations with respect to any such hotel, motel, apartment house, or dwelling other than a detached single-family dwelling, which is not subject to the jurisdiction of any local building department.

(e) The provisions of this section, the building standards published in the State Building Standards Code relating to noise insulation, and the other rules and regulations adopted pursuant to this section shall not apply to detached single-family dwellings.

(f) Such other rules and regulations adopted by the Office of Noise Control shall become operative six months after their date of adoption.

(g) Sections 17925, 17958, 17958.5, and 17958.7 shall not apply to the provisions of this section.

(Added by Stats. 1972, c. 1424, p. 3106, § 2. Amended by Stats. 1975, c. 1124, p. 2738, § 2; Stats. 1979, c. 1152, p. 4264, § 68.)

§17922.7 Noise insulation standards; changes, modifications or additions by cities, counties and public entities

(a) Except as otherwise provided in subdivisions (b) and (c), the governing body of every city, county, city and county, and public entity shall adopt ordinances or regulations imposing the same requirements as are published in the State Building Standards Code relating to noise insulation and as are contained in the other rules and regulations adopted pursuant to Section 17922.6 within six months after the date of publication in the State Building Standards Code or the date of adoption of such other rules and regulations. The building standards relating to noise insulation published in the State Building Standards Code and the other rules and regulations adopted pursuant to Section 17922.6 shall apply in any city, county, city and county, or to any hotel, motel, apartment house, or dwelling other than a detached single-family dwelling, which is owned, operated, or maintained by any public entity, if the appropriate governing body fails to adopt such ordinances or regulations within six months after such date of publication or adoption.

(b) In adopting such ordinances or regulations, the governing body of any city, county, city and county, or public entity may make such changes, modifications, or additions to the minimum requirements contained in such building standards relating to noise insulation published in the State Building Standards Code, or in the other rules and regulations adopted pursuant to Section 17922.6, as such governing body determines are reasonably necessary due to local conditions. The governing body may also impose noise insulation standards on a case by case basis on new single-family detached dwellings, if the governing body determines that such standards are necessary due to substantial noise generated by airports, roadways, or commercial and industrial activities immediately surrounding or adjacent to such proposed dwellings. Any local noise insulation standards adopted for single-family detached dwellings shall not exceed comparable standards for multifamily housing. The governing body shall find that ordinances or regulations, adopted pursuant to this subdivision, will require the dimunition of the noise levels permitted by the building standards relating to noise insulation published in the State Building Standards Code and in the other rules and regulations adopted pursuant to Section 17922.6.

(c) Prior to making such modifications, changes, or additions pursuant to subdivision (b), the governing body shall make an express finding that such modifications, changes, or additions are needed, which finding shall be available as a public record. A copy of such finding, together with the modification, change, or addition, shall be filed with the Office of Noise Control.

(Added by Stats. 1972, c. 1424, p. 3106, § 3. Amended by Stats. 1975, c. 1124, p. 2739, § 3; Stats. 1978, c. 1185, p. 3834, § 1; Stats. 1979, c. 1152, p. 4265, § 69.)

§17922.8 Advisory committee

The Office of Noise Control may appoint an advisory committee to assist the office in reviewing and revising the noise insulation standards previously adopted.

(Amended by Stats. 1997, c. 645 (A.B.1071), § 5.)

§17922.9 Low and moderate income housing; FHA mortgage restriction on garage and house size; exemption from local requirements

(a) The Legislature hereby finds and declares that the provision of an adequate level of affordable housing, in and of itself, is a fundamental responsibility of the state and that a generally inadequate supply of decent, safe, and sanitary housing affordable to persons of low and moderate income threatens orderly community and regional development, including job creation, attracting new private investment, and creating the physical, economic, social, and environmental conditions to support continued growth and security of all areas of the state.

The Legislature further finds and declares that many rural communities depend on mortgage financing available through the Farmers Home Administration and that the continued construction of affordable housing is a priority for the state. However, the Legislature, in requiring waiver of certain local requirements respecting adequacy of garages and carports and house size, does not endorse the restrictive Farmers Home Administration regulations that preclude financing of two-car garages and houses exceeding a maximum size.

The Legislature further finds and declares that inadequate housing supplies have a negative impact on regional development and are, therefore, a matter of statewide interest and concern.

(b) Notwithstanding any local ordinance, charter provision, or regulation to the contrary, if the applicant for a building permit for construction of a qualifying residential structure submits with the application a conditional loan commitment letter or letter of intent to finance issued by the Farmers Home Administration of the United States Department of Agriculture for the structure, the city, county, or city and county issuing the building permit shall not impose any requirement on the permit respecting the size or capacity of any appurtenant garage or carport or house size which exceeds the size or capacity that the Farmers Home Administration will finance under its then applicable regulations and policies. "Qualifying residential structure," as used in this section, means any single-family or multifamily residential structure financed by the Farmers Home Administration and which is restricted pursuant to federal law to ownership or occupancy by households with incomes not exceeding the income criteria for persons and families of low and moderate income, as defined by Section 50093, or more restrictive income criteria.

(c) This section does not preclude a city, county, or city and county from requiring the provision of one uncovered, paved parking space located outside the required setback and outside the driveway approach to the

garage or covered parking space plus a garage or covered parking space that does not exceed the size and capacity allowed for Farmers Home Administration financing. However, this setback requirement may not exceed the setbacks applicable to single-family dwelling units in the same zoning district that have two-car garages.

(Added by Stats. 1988, c. 97, § 1. Amended by Stats. 1994, c. 198 (A.B.832), § 1, eff. July 18, 1994.)

§17923 Alternate materials and methods of construction; approval; tests to prove compliance

(a) The provisions of Section 17922 are not intended to prevent the use of any material, appliance, installation, device, arrangement, or method of construction not specifically prescribed by this part, the building standards published in the State Building Standards Code relating thereto, and the other rules and regulations promulgated pursuant thereto, providing such alternate has been approved. The department may approve any such alternate if it finds that the proposed design is satisfactory and that the material, appliance, installation, device, arrangement, method, or work offered is, for the purpose intended, at least the equivalent of that prescribed in this part, the building standards published in the State Building Standards Code relating thereto, and the other rules and regulations promulgated pursuant thereto in performance, safety, and for the protection of life and health.

(b) Whenever there is evidence that any material, appliance, installation, device, arrangement, or method of construction does not conform to the requirements of this part, the building standards published in the State Building Standards Code relating thereto, and the other rules and regulations promulgated pursuant thereto, or in order to substantiate claims for alternates, the department may require tests as proof of compliance to be made at the expense of the owner or his agent.

(Added by Stats. 1961, c. 1844, p. 3920, § 8. Amended by Stats. 1978, c. 1185, p. 3835. § 2; Stats. 1979, c. 1152, p. 4266, § 70.)

§17924 Promulgation of rules; adoption and submission of building standards

Rules and regulations shall be promulgated pursuant to Chapter 3.5 (commencing with Section 11340) of Part 1 of Division 3 of Title 2 of the Government Code, and no state department, officer, board, agency, committee, or commission shall have power pursuant to the provisions of this part to publish building standards, as defined in Section 18909, but shall propose and submit those building standards as deemed necessary to carry out the provisions of this part for adoption and publishing pursuant to the provisions of Part 2.5 (commencing with Section 18901).

(Amended by Stats. 1988, c. 97, § 1. Amended by Stats. 1994, c. 198 (A.B.832), § 1, eff. July 18, 1994.)

§17925 Opposition to building standards, rules or regulations; hearing; determination; filing

Except as provided in Section 17922.6, any person, firm, corporation, or governmental agency that opposes the application of any applicable building standard published in the State Building Standards Code or any other rule or regulation adopted by the department within a particular local area may request a hearing before the local appeals board regarding the matter. If the local appeals board determines after the hearing that because of local conditions or factors it is not reasonable for the building standard, rule, or regulation to be applied in the local area, the building standard, rule, or regulation shall have no application within that local area. A copy of the determination of the local appeals board, together with a report of the local conditions upon which the determination is based, shall be filed with the department pursuant to Section 17958.7.

(Added by Stats. 1961, c. 1844, p. 3921, § 8. Amended by Stats. 1972, c. 1224, p. 2363, § 4; Stats. 1979, c. 1152, p. 4266, § 72; Stats. 1981, c. 714, p. 2686, § 237; Stats. 1983, c. 101, § 130.)

§17927 Garage door springs

The department shall propose the adoption, amendment, or repeal of building standards pursuant to the provisions of Chapter 4 (commencing with Section 18935) of Part 2.5, and the department shall adopt, amend, and repeal other rules and regulations for garage door springs for installation in garages which are accessory to apartment houses, hotels, motels, and dwellings as the department determines are reasonably necessary to prevent the death or injury of persons or damage to property resulting from the breaking of the garage door springs. Except as otherwise provided in this part, the department shall enforce building standards published in the California Building Standards Code relating to garage door springs and other rules and regulations adopted by the department pursuant to this section.

No garage door spring which violates the provisions of any building standard published in the California Building Standards Code relating to garage door springs or any other rule or regulation adopted by the department pursuant to this section shall be sold or offered for sale, or installed in any garage which is accessory to an apartment house, hotel, motel, or dwelling, on or after the date of publication of the building standard or the effective date of the rule or regulation.

(Amended by Stats. 1997, c. 645 (A.B.1071), § 7.)

§17930 Hearing

Except as provided in Section 18945, the director or the director's designee shall hear appeals brought by any person as to the application of any rule or regulation promulgated pursuant to this part, except a building standard published in the State Building Standards Code, to such person under any facts and circumstances presented to the director or the director's designee by the person alleging that the application or enforcement of any other rule or regulation by the department under the facts and circumstances is an erroneous or unlawful application or enforcement of the other rule or regulation by the department. Any appeal shall be submitted through the designated local agency.

Any appeal alleging erroneous or unlawful application by the department of a building standard published in the State Building Standards Code may be brought pursuant to the provisions of Chapter 5 (commencing with Section 18945) of Part 2.5.

The director or the director's designee shall not, however, hear any appeals regarding local regulations which have been adopted pursuant to Sections 17958.5 and 17958.7.

(Formerly §17937, added by Stats. 1961, c. 1844, p. 3922, § 8. Renumbered §17930 and amended by Stats. 1968, c. 1018, p. 1970, § 7; Stats. 1972, c. 1224, p. 2363, § 5; Stats. 1979, c. 1152, p. 4267, § 74; Stats. 1982, c. 1020, § 1.)

§17931 Rules pertaining to hearing appeals

The department may promulgate rules pertaining to hearing appeals. All rules shall be made in accordance with the provisions of Chapter 3.5 (commencing with Section 11340) of Part 1 of Division 3 of Title 2 of the Government Code.

(Formerly §17935, added by Stats. 1961, c. 1844, p. 3922, § 8. Renumbered §17931 and amended by Stats. 1968, c. 1018, p. 1970, § 6l Stats. 1982, c. 1020, § 2.)

§17932 Finality of decision

A decision of the director or the director's designee made pursuant to Section 17930 is final, except for such action as may be taken by a court as permitted or required by law.

(Formerly §17938, added by Stats. 1961, c. 1844, p. 3922, § 8. Renumbered §19732 and amended by Stats. 1968, c. 1018, p. 1970, § 8; Stats. 1982, c. 1020, § 3.)

§17933 Repealed by Stats. 1968, c. 1018, p. 1970, § 5

§17934 Blank

§17935 Renumbered §17931 and amended by Stats. 1968, c. 1018, p. 1970, § 6

§17936 Blank

§17937, §17938 Renumbered §17930, §17932 and amended by Stats. 1968, c. 1018, p. 1970, § 7, § 8

§17939 Repealed by Stats. 1968, c. 1018, p. 1970, § 9

§17940 Repealed by Stats. 1968, c. 1473, p. 2950, § 58

§17941 Repealed by Stats. 1968, c. 1018, p. 1970, § 11

§17950 Apartment house, hotel and dwelling provisions

The provisions of this part, the building standards published in the State Building Standards Code, or the other rules and regulations promulgated pursuant to the provisions of this part which relate to apartment houses, hotels, motels, and dwellings, and buildings and structures accessory thereto, apply in all parts of the state.

(Added by Stats. 1961, c. 1844, p. 3922, § 8. Amended by Stats. 1965, c. 1033, p. 2671, § 2; Stats. 1979, c. 1152, p. 4268, § 75.)

§17951 Local fees; alternate materials and construction methods; approval; evidence

(a) The governing body of any county or city, including a charter city, may prescribe fees for permits, certificates, or other forms or documents required or authorized by this part or rules and regulations adopted pursuant to this part.

(b) The governing body of any county or city, including a charter city, or fire protection district, may prescribe fees to defray the costs of enforcement required by this part to be carried out by local enforcement agencies.

(c) The amount of the fees prescribed pursuant to subdivisions (a) and (b) shall not exceed the amount reasonably required to administer or process these permits, certificates, or other forms or documents, or to defray the costs of enforcement required by this part to be carried out by local enforcement agencies, and shall not be levied for general revenue purposes. The fees shall be imposed pursuant to Section 66016 of the Government Code.

(d) **(1)** The provisions of this part are not intended to prevent the use of any manufactured home, mobilehome, material, appliance, installation, device, arrangement, or method of construction not specifically prescribed by the California Building Standards Code or this part, provided that this alternate has been approved by the building department.

(2) The building department of any city or county may approve an alternate if it finds that the proposed design is satisfactory and that the material, appliance, installation, device, arrangement, method, or work offered is, for the purpose intended, at least the equivalent of that prescribed in the California Building Standards
Code or this part in performance, safety, and for the protection of
life and health.

(3) The building department of any city or county shall require evidence that any material, appliance, installation, device, arrangement, or method of construction conforms to, or that the proposed alternate is at least equivalent to, the requirements of this part, building standards published in the California Building Standards Code, or the other rules and regulations promulgated pursuant to this part and in order to substantiate claims for alternates, the building department of any city or county may require tests as proof of compliance to be made at the expense of the owner or the owner's agent by an approved testing agency selected by the owner or the owner's agent.

(Amended by Stats. 1990, c. 1572 (A.B.3228), § 24; Stats. 1993, c. 413 (A.B.765), § 2, eff. Sept. 21, 1993; Stats. 2000, c. 471 (A.B.2008), § 5.)

§17952 Enforcement; notice to city or county of violation; hearing; assessment of fees

(a) In the event of nonenforcement of this part, or the building standards published in the California Building Standards Code, or the other rules and regulations promulgated pursuant to the provisions of this part, such provisions, building standards or other rules and regulations shall be enforced by the department in any city or county after the department has given written notice to the governing body of that city or county or fire protection district, as the case may be, of a violation of this part, those building standards, or the other rules or regulations promulgated pursuant to the provisions of this part and the city or county has failed to initiate proceedings to secure correction of the violation within 30 days of the date of that notice. The city or county or fire protection district may request a hearing before the department pursuant to Section 17930 within the 30 days to show cause for nonenforcement. Enforcement by the department shall not be initiated until the decision of the department, adverse to the city or county or fire protection district, is rendered.

(b) In the event of enforcement by the department pursuant to subdivision (a), the costs incurred by the department for such enforcement shall be borne by such city, or county, or city and county, or fire protection

district. The department may assess fees to defray the costs of enforcement, thereby reducing the cost to be borne by the city, county, city and county, or fire protection district, but the department need not assess such fees and may not require the city, county, city and county, or fire protection district to assess fees to offset department costs.

(Amended by Stats. 1997, c. 645 (A.B.1071), § 8.)

§17953 Preliminary soil report; ordinance requiring; waiver

Each city, county, and city and county shall enact an ordinance which requires a preliminary soil report, prepared by a civil engineer who is registered by the state, based upon adequate test borings or excavations, of every subdivision, where a tentative and final map is required pursuant to Section 66426 of the Government Code.

The preliminary soil report may be waived if the building department of the city, county or city and county, or other enforcement agency charged with the administration and enforcement of the provisions of this part, shall determine that, due to the knowledge such department has as to the soil qualities of the soil of the subdivision or lot, no preliminary analysis is necessary.

(Added by Stats. 1965, c. 1001, p. 2631, § 1. Amended by Stats. 1975, c. 24, p. 44, § 27, eff. April 4, 1975.)

§17954 Soil investigation by lot; necessity; preparation; recommendations

If the preliminary soil report indicates the presence of critically expansive soils or other soil problems which, if not corrected, would lead to structural defects, such ordinance shall require a soil investigation of each lot in the subdivision.

The soil investigation shall be prepared by a civil engineer who is registered in this state. It shall recommend corrective action which is likely to prevent structural damage to each dwelling proposed to be constructed on the expansive soil.

(Added by Stats. 1965, c. 1001, p. 2631, § 2).

§17955 Approval; building permit conditions; appeal

The building department of each city, county, or city and county, or other enforcement agency charged with the administration and enforcement of the provisions of this part, shall approve the soil investigation if it determines that the recommended action is likely to prevent structural damage to each dwelling to be constructed. As a condition to the building permit, the ordinance shall require that the approved recommended action be incorporated in the construction of each dwelling. Appeal from such determination shall be to the local appeals board.

(Added by Stats. 1965, c. 1001, p. 2631, § 3.)

§17956 Liability of public agency or employee

A city, county, or city and county or other enforcement agency charged with the administration and enforcement of the provisions of this part, is not liable for any injury which arises out of any act or omission of the city, county or city and county, or other enforcement agency, or a public employee or any other person under Section 17953, 17954, or 17955.

(Added by Stats. 1965, c. 1001, p. 2632, § 4.)

§17957 Alternate procedure

The governing body of any city, county, or city and county may enact an ordinance prescribing an alternate procedure which is equal to or more restrictive than the procedure specified in Sections 17953, 17954, and 17955.

(Added by Stats. 1965, c. 1001, p. 2632, § 5.)

§17958 Adoption of regulations or ordinances imposing requirements in Section 17922 by governing body of cities and counties

Except as provided in Sections 17958.8 and 17958.9, any city or county may make changes in the provisions adopted pursuant to Section 17922 and published in the California Building Standards Code or the other regulations thereafter adopted pursuant to Section 17922 to amend, add, or repeal ordinances or regulations which impose the same requirements as are contained in the provisions adopted pursuant to Section 17922 and published in the California Building Standards Code or the other regulations adopted pursuant to Section 17922 or make changes or modifications in those requirements upon express findings pursuant to Sections 17958.5 and 17958.7. If any city or county does not amend, add, or repeal ordinances or regulations to impose those requirements or make changes or modifications in those requirements upon express findings, the provisions published in the California Building Standards Code or the other regulations promulgated pursuant to Section 17922 shall be applicable to it and shall become effective 180 days after publication by the California Building Standards Commission. Amendments, additions, and deletions to the California Building Standards Code adopted by a city or county pursuant to Section 17958.7, together with all applicable portions of the California Building Standards Code, shall become effective 180 days after publication of the California Building Standards Code by the California Building Standards Commission.

(Added by Stats. 1984, c. 908, § 3. Amended by Stats. 1997, c. 645 (A.B.1071), § 9.)

§17958.1 Efficiency units

Notwithstanding Sections 17922, 17958, and 17958.5, a city or county may, by ordinance, permit efficiency units for occupancy by no more than two persons which have a minimum floor area of 150 square feet and which may also have partial kitchen or bathroom facilities, as specified by the ordinance. In all other respects, these efficiency units shall conform to minimum standards for those occupancies otherwise made applicable pursuant to this part.

"Efficiency unit," as used in this section, has the same meaning specified in the Uniform Building Code of the International Conference of Building Officials, as incorporated by reference in Chapter 2-12 of Part 2 of Title 24 of the California Code of Regulations.

(Added by Stats. 1987, c. 208, § 1. Amended by Stats. 1997, c. 645 (A.B.1071), § 10.)

§17958.2 Limited density owner-built rural dwellings; regulations; findings prior to operative effect; local variances

(a) Notwithstanding Section 17958, regulations of the department adopted for limited-density owner-built rural dwellings, which are codified in Article 8 (commencing with Section 74) of Subchapter 1 of Chapter 1 of Title 25 of the California Code of Regulations, shall not become operative within any city or county unless and until the governing body of the city or county makes an express finding that the application of those regulations within the city or county is reasonably necessary because of local conditions and the city or county files a copy of that finding with the department.

(b) In adopting ordinances or regulations for limited-density owner-built rural dwellings, a city or county may make any changes or modifications in the requirements contained in Article 8 (commencing with Section 74) of Subchapter 1 of Chapter 1 of Title 25 of the California Code of Regulations that it determines are reasonably necessary because of local conditions, if the city or county files a copy of the changes or modifications and the express findings for the changes or modifications with the department. No change or modification of that type shall become effective or operative for any purpose until the finding and the change or modification has been filed with the department.

(Amended by Stats. 2000, c. 471 (A.B.2008), § 6.)

§17958.4 Window security bars; safety release mechanisms; stats and local requirements; disclosure; application of ordinances

(a) Any city, county, or city and county, may, by ordinance, establish a date by which all residential real property with security window bars on bedroom windows shall meet current state and local requirements for safety release mechanisms on security window bars consistent with the applicable standards in the 1995 Edition of the California Building Standards Code, and any changes made by the city, county, or city and county pursuant to Section 17958.

(b) Disclosures of the existence of any safety release mechanism on any security window bar shall be made in writing, and may be included in existing transactional documents including, but not limited to, a real estate sales contract or receipt for deposit, or a transfer disclosure statement pursuant to Section 1102.6 or 1106.6a of the Civil Code.

(c) Enforcement of an ordinance adopted pursuant to subdivision (a) shall not apply as a condition of occupancy or at the time of any transfer that is subject to the Documentary Transfer Tax Act, Part 6.7 (commencing with Section 11901) of the Revenue and Taxation Code.

(Added by Stats. 1996, c. 926 (A.B.3026), § 3, operative July 1, 1997.)

§17958.5 Local variances; annual report

Except as provided in Section 17922.6, in adopting the ordinances or regulations pursuant to Section 17958, a city or county may make such changes or modifications in the requirements contained in the provisions published in the California Building Standards Code and the other regulations adopted pursuant to Section 17922 as it determines, pursuant to the provisions of Section 17958.7, are reasonably necessary because of local climatic, geological, or topographical conditions.

For purposes of this subdivision, a city and county may make reasonably necessary modifications to the requirements, adopted pursuant to Section 17922, contained in the provisions of the code and regulations on the basis of local conditions.

(Amended by Stats. 1984, c. 908, § 4; Stats. 1985, c. 282, § 1; Stats. 1990, c. 1083 (S.B.1830), § 7; Stats. 1990, c. 1111 (A.B.2666), § 7; Stats. 1997, c. 645 (A.B.1071), § 11.)

§17958.7 Local variances; findings; filing; rejection of modification

(a) Except as provided in Section 17922.6, the governing body of a city or county, before making any modifications or changes pursuant to Section 17958.5, shall make an express finding that such modifications or changes are reasonably necessary because of local climatic, geological or topographical conditions. Such a finding shall be available as a public record. A copy of those findings, together with the modification or change expressly marked and identified to which each finding refers, shall be filed with the California Building Standards Commission. No modification or change shall become effective or operative for any purpose until the finding and the modification or change have been filed with the California Building Standards Commission.

(b) The California Building Standards Commission may reject a modification or change filed by the governing body of a city or county if no finding was submitted.

(Amended by Stats. 1984, c. 908, § 5; Stats. 1997, c. 645 (A.B.1071), § 12.)

§17958.8 Alterations and repairs; original materials and methods

Local ordinances or regulations governing alterations and repair of existing buildings shall permit the replacement, retention, and extension of original materials and the use of original methods of construction as long as the hotel, lodginghouse, motel, apartment house, or dwelling, or portions thereof, or building and structure accessory thereto, complies with the provisions published in the California Building Standards Code and the other rules and regulations of the department or alternative local standards adopted pursuant to Section 13143.2 and does not become or continue to be a substandard building.

(Added by Stats. 1974, c. 1268, p. 2752, § 6. Amended by Stats. 1979, c. 1152, p. 4271, § 81; Stats. 1983, c. 101, § 133.)

§17958.9 Apartment houses and dwellings; movement; retention of existing materials and methods of construction

Local ordinances or regulations governing the moving of apartment houses and dwellings shall, after July 1, 1978, permit the retention of existing materials and methods of construction so long as the apartment house or dwelling complies with the building standards for foundation applicable to new construction, and does not become or continue to be a substandard building.

(Amended by Stats. 1993, c. 288 (A.B.1736), § 2, eff. July 30, 1993.)

§17958.11 Alternative building regulations; joint living and work quarters; geographic areas

(a) Any city or county may adopt alternative building regulations for the conversion of commercial or industrial buildings, or portions thereof, to joint living and work quarters. As used in this section, "joint living and work quarters" means residential occupancy by a family maintaining a common household, or by not more than four unrelated persons, of one or more rooms or floors in a building originally designed for industrial or commercial occupancy which include (1) cooking space and sanitary facilities in conformance with local building standards adopted pursuant to Section 17958 or 17958.5 and (2) adequate working space reserved for, and regularly used by, one or more persons residing therein.

The alternative building regulations adopted pursuant to this section shall be applicable in those geographic areas specifically designated for such occupancy, or as expressly permitted by a redevelopment plan with respect to a redevelopment project area. The alternative building regulations need not impose the same requirements as regulations adopted pursuant to Section 17922, except as otherwise provided in this section, but in permitting repairs, alterations, and additions necessary to accommodate joint living and work quarters, the alternative building regulations shall impose such requirements as will, in the determination of the local governing body, protect the public health, safety, and welfare.

(b) The Legislature hereby finds and declares that a substantial number of manufacturing and commercial buildings in urban areas have lost manufacturing and commercial tenants to more modern manufacturing and commercial premises, and that the untenanted portions of such buildings constitute a potential resource capable, when appropriately altered, of accommodating joint living and work quarters which would be physically and economically suitable particularly for use by artists, artisans, and similarly-situated individuals. The Legislature further finds that the public will benefit by making such buildings available for joint living and work quarters for artists, artisans, and similarly-situated individuals because (1) conversion of space to joint living and work quarters provides a new use for such buildings contributing to the revitalization of central city areas, (2) such conversion results in building improvements and rehabilitation, and (3) the cultural life of cities and of the state as a whole is enhanced by the residence in such cities of large numbers of persons regularly engaged in the arts.

(c) The Legislature further finds and declares that (1) persons regularly engaged in the arts require larger amounts of space for the pursuit of their artistic endeavors and for the storage of materials therefor, and of the products thereof, than are regularly found in dwellings, (2) the financial remunerations to be obtained from a career in the arts are generally small, (3) persons regularly engaged in the arts generally find it financially difficult to maintain quarters for their artistic endeavors separate and apart from their places of residence, (4) high property values and resulting rental costs make it particularly difficult for persons regularly engaged in the arts to obtain the use of the amount of space required for their work, and (5) the residential use of such space is accessory to the primary use of such space as a place of work.

It is the intent of the Legislature that local governments have discretion to define geographic areas which may be utilized for joint living and work quarters and to establish standards for such occupancy, consistent with the needs and conditions peculiar to the local environment. The Legislature recognizes that building code regulations applicable to residential housing may have to be relaxed to provide joint living and work quarters in buildings previously used for commercial or industrial purposes.

(Added by Stats. 1979, c. 434, p. 1557, § 3.5.)

§17959 Consideration of proposed universal design guidelines for home construction or home modifications; enhancement of full life cycle use of housing without regard to physical abilities or disabilities of home's occupants or guests as part of state's guidelines or ordinances

(a) No later than December 31, 2003, the department shall consider proposed universal design guidelines for home construction or home modifications which may be submitted by the California Department of Aging, the California Commission on Aging, the Department of Rehabilitation, the office of the State Architect of the Department of General Services, the office of the State Fire Marshal, the California Building Standards Commission, or other state departments. Thereafter, the department, without significantly impacting housing cost and affordability, shall, in consultation with these agencies, develop guidelines and at least one model ordinance for new construction and home modifications that is consistent with the principles of universal design as promulgated by the Center for Universal Design at North Carolina State University or other similar design guidelines that enhance the full life cycle use of housing without regard to the physical abilities or disabilities of a

home's occupants or guests in order to accommodate a wide range of individual preferences and functional abilities. In developing these guidelines and model ordinances, the department also shall meet with, and solicit information from, individuals and organizations representing individuals and entities with interests in construction, local governments, the health and welfare of senior citizens and persons with disabilities, architects, and others with expertise in these design and living issues. The department shall ensure that at least three meetings subject to the Bagley-Keene Open Meeting Act (Article 9 (commencing with Section 11120) of Chapter 1 of Part 1 of Division 3 of the Government Code) shall occur, that shall include opportunities for government agencies, individuals, and organizations identified in this subdivision to participate and comment on proposed guidelines or draft model ordinances.

(b) **(1)** In addition to the authority granted by Sections 17958.5 and 18941.5, and for the purposes of this section, a city, county, or city and county may, by ordinance, make changes or modifications in addition to or in excess of the requirements contained in the California Building Standards Code adopted pursuant to Sections 17922 and 18928 if the city, county, or city and county makes a finding that the changes and modifications are reasonably necessary and are substantially the same as the guidelines or model ordinances adopted pursuant to subdivision (a). In no case shall the changes or modifications be less restrictive than the requirements published in the California Building Standards Code.

(2) A city, county, or city and county adopting an ordinance pursuant to this subdivision shall file a copy of the ordinance and the findings with the department. No such ordinance shall become effective or operative for any purpose until the findings and the ordinance have been filed with the department. The department may review the findings and each ordinance to evaluate their consistency with this subdivision, and shall provide written comments to the adopting entity as to any such evaluation.

(c) **(1)** In a city, county, or city and county where a universal design ordinance has not been adopted pursuant to subdivision (b), developers of housing for senior citizens, persons with disabilities, and other persons and families are encouraged, but not required, to seek information and assistance from the department and the California Department of Aging regarding the principles of universal design specified in subdivision (a) and consider those principles in their construction.

(2) The department, the California Department of Aging, and any other interested state agency also may, to the extent feasible, disseminate information to interested persons and entities in all parts of the state regarding the principles of universal design and their relationship to new construction and home modifications.

(d) Subdivision (b) shall become operative on January 1, 2005.

(Added by Stats. 2002, c. 726 (A.B.2787), § 3.)

§17959.1 Solar energy systems; ordinance to prohibit or to unreasonably restrict use; limitations

No local ordinance enacted pursuant to this chapter shall have the effect of prohibiting or of unreasonably restricting the use of solar energy systems, other than for the preservation of the public health and safety. The provisions of this section shall apply to charter cities.

This section shall not apply to ordinances which impose reasonable restrictions on solar energy systems. However, it is the policy of the state to promote and encourage the use of solar energy systems and to remove obstacles thereto. Accordingly, reasonable restrictions on a solar energy system are those restrictions which do not significantly increase the cost of the system or significantly decrease its efficiency, or which allow for an alternative system of comparable cost and efficiency.

As used in this section, "solar energy system" shall be defined as set forth in Section 801.5 of the Civil Code.

(Added by Stats. 1978, c. 1154, p. 3544, § 7.)

§17959.3 Passive solar energy design

(a) It is the intent of the Legislature to encourage the use of passive solar energy design. The Legislature recognizes that building code regulations with regard to natural light and ventilation standards have to be modified to permit existing buildings to be retrofitted with passive solar energy.

(b) Notwithstanding Section 17922, any city or county may by ordinance or regulation permit windows required for light and ventilation of habitable rooms in dwellings to open into areas provided with natural light and ventilation which are designed and built to act as passive solar energy collectors.

(c) On or before September 1, 1999, the department shall, after consulting with the State Energy Resources Conservation and Development Commission, prepare, adopt, and submit building standards to implement the provisions of this section for approval as part of the California Building Standards Code pursuant to Chapter 4 (commencing with Section 18935) of Part 2.5.

(Amended by Stats. 1998, c. 689 (S.B.1362), § 10; Stats. 1999, c. 643 (A.B.1679), § 10.5.)

§17959.4 Hardship cases; deferral of order of abatement

The housing appeals board may, in cases of extreme hardship to owner-occupants or tenants of dwellings, provide for deferral of the effective date of orders of abatement. Any deferral of the effective date of an order of abatement under this section shall terminate upon any sale or transfer of the dwelling by the owner-occupant but shall not terminate upon the sale or transfer of the dwelling if the dwelling is occupied by a tenant other than the owner-occupant.

(Amended by Stats. 1985, c. 1279, § 4.)

§17959.5 Variances

The housing appeals board may, upon appeal or upon application by the owner, grant variances from local use zone requirements in order to permit an owner-occupant of a dwelling to construct an addition to a dwelling to meet occupancy standards relating the number of persons in a household to the number of rooms or bedrooms. This power of the housing appeals board shall be in addition to, and shall not otherwise affect, the powers of other governmental boards and agencies to allow local use zone variances.

(Added by Stats. 1977, c. 847, p. 2549, § 5.)

§17960 City or county building departments

The building department of every city or county shall enforce within its jurisdiction all the provisions published in the State Building Standards Code, the provisions of this part, and the other rules and regulations promulgated pursuant to the provisions of this part pertaining to the erection, construction, reconstruction, movement, enlargement, conversion, alteration, repair, removal, demolition, or arrangement of apartment houses, hotels, or dwellings.

(Added by Stats. 1961, c. 1844, p. 3923, § 8. Amended by Stats. 1965, c. 546, p. 1875, § 1; Stats. 1979, c. 1152, p. 4272, § 83.)

§17960.1 Plan-checking; contract with employment of private entity

(a) The governing body of a local agency may authorize its enforcement agency to contract with or employ a private entity or persons on a temporary basis to perform the plan-checking function.

(b) A local agency need not enter into a contract or employ persons if it determines that no entities or persons are available or qualified to perform the plan-checking services.

(c) Entities or persons employed by a local agency may, pursuant to agreement with the local agency, perform all functions necessary to check the plans and specifications to comply with other requirements imposed pursuant to this part or by local ordinances adopted pursuant to this part, except those functions reserved by this part or local ordinance to the legislative body. A local agency may charge the applicant fees in an amount necessary to defray costs directly attributable to employing or contracting with entities or persons performing services pursuant to this section which the applicant requested.

(d) When there is an excessive delay in checking plans and specifications submitted as a part of an application for a residential building permit, the local agency shall, upon request of the applicant, contract with or employ a private entity or persons on a temporary basis to perform the plan-checking function subject to subdivisions (b) and (c).

(e) For purposes of this section:

(1) "Enforcement agency" means the building department or building division of a local agency.

(2) "Excessive delay" means the enforcement agency of a local agency has taken either of the following:

(A) More than 30 days after submittal of a complete application to complete the structural building safety plan check of the applicant' s set of plans and specifications which are suitable for checking.

For a discretionary building permit, the time period specified in this paragraph shall commence after certification of the environmental impact report, adoption of a negative declaration, or a determination by the local agency that the project is exempt from Division 13 (commencing with Section 21000) of the Public Resources Code.

(B) Including the days actually taken in (A), more than 45 days to complete the checking of the resubmitted corrected plans and specifications suitable for checking after the enforcement agency had returned the plans and specifications to the applicant for correction.

(3) "Local agency" means a city, county, or city and county.

(4) "Residential building" means a one-to-four family detached structure not exceeding three stories in height.

(Amended by Stats. 1992, c. 839 (A.B.3101), § 1.)

§17960.5 Residential building standards; application to approved projects

The building standards for residential buildings in Chapter 2-53 of Part 2, and Chapter 4-10 of Part 4, of Title 24 of the California Administrative Code effective July 13, 1982, shall not apply to the construction of new residential housing projects which received approval by an advisory agency or other appropriate local agency on or before June 15, 1982, provided application for the permits to construct single-family detached dwellings are submitted or filed on or before June 15, 1983, and the application for all other residential building permits are submitted or filed on or before December 31, 1983.

For the purposes of this section, "approval" includes, but is not limited to, approval or conditional approval of a tentative subdivision or tentative parcel map or parcel map pursuant to the Subdivision Map Act (Division 2 (commencing with Section 66410) of Title 7 of the Government Code), condominium plan or other permit for a residential housing project.

(Added by Stats. 1982, c. 507, § 1, eff. July 13, 1982.)

§17961 City or county housing or building department, or environmental agency; enforcement duties

(a) The housing or building department or, if there is no building department acting pursuant to this section, the health department of every city, county, or city and county, or any environmental agency authorized pursuant to Section 101275, shall enforce within its jurisdiction all of this part, the building standards published in the State Building Standards Code, and the other rules and regulations adopted pursuant to this part pertaining to the maintenance, sanitation, ventilation, use, or occupancy of apartment houses, hotels, or dwellings. The health department or the environmental agency may, in conjunction with a local housing or building department acting pursuant to this section, enforce within its jurisdiction all of this part, the building standards published in the State Building Standards Code, and the other rules and regulations adopted pursuant to this part pertaining to the maintenance, sanitation, ventilation, use, or occupancy of apartment houses, hotels, or dwellings. Each department and agency, as applicable, shall coordinate enforcement activities with each other and interested departments and agencies in order to avoid unnecessary duplication.

(b) Notwithstanding subdivision (a), the health department of every city, county, or city and county, or any environmental agency authorized pursuant to Section 101275 may, in addition to the local building department, if any, enforce within its jurisdiction the provisions of Section 17920.10 and shall coordinate enforcement activities with other interested departments and agencies in order to avoid unnecessary duplication.

(c) The State Department of Health Services may enforce Section 17920.10 if any local agency or department specified in subdivisions (a) and (b) enters into a written agreement, approved and published pursuant to local government procedures, with the State Department of Health Services to enforce that section, or provides the State Department of Health Services with a written request to enforce that section for a specific case following the identification of a lead poisoned child in that jurisdiction.

Amended by Stats. 1996, c. 1023 (S.B.1497), § 204, eff. Sept. 29, 1996; Stats. 2002, c. 931 (S.B.460), § 2.)

§17961.5 Renumbered §17962 and amended by Stats. 1979, c. 1152, p. 4272, § 85

§17962 Fire protection provisions; enforcement

The chief of any city or any county fire department or district providing fire protection services, and their authorized representatives, shall enforce in their respective areas all those provisions of this part, the building standards published in the State Building Standards Code relating to fire and panic safety, and those rules and regulations promulgated pursuant to the provisions of this part pertaining to fire prevention, fire protection, the control of the spread of fire, and safety from fire or panic.

(Formerly §17961.5, added by Stats. 1961, c. 1844, p. 3923, § 8. Renumbered §17962 and amended by Stats. 1979, c. 1152, p. 4272, § 85; Stats. 1980, c. 118, p. 281, § 11.)

§17964 Designation of department or officer

By charter, ordinance, or resolution, a city, county, or city and county may designate and charge a department organized to carry out the purposes of this part, or an officer charged with the responsibility of carrying out this part, with the enforcement of this part, the building standards published in the California Building Standards Code, or any other rules and regulations adopted pursuant to this part for the protection of the public health, safety, and general welfare as set forth in Section 17921. However, this section shall apply to the duties and responsibilities enumerated in Section 17962 only if, in the area involved, there is no city, county, or city and county fire department or district providing fire protection services. By March 1 of each year, the designated department or officer shall provide in writing to the department the name, address, telephone number, and contact person of the designated department or officer.

(Amended by Stats. 2000, c. 471 (A.B.2008), § 8.)

§17965 Department of housing and community development

Where there is no local enforcement agency charged with the enforcement of this part pursuant to Section 17964, and to the extent that enforcement responsibility is not assigned to a local enforcement agency pursuant to Section 17960, 17961, or 17961.5, the department shall enforce all the applicable provisions of this part, the building standards published in the State Building Standards Code, and other rules and regulations promulgated by the department pursuant to the provisions of this part, or alternative standards adopted by a city or county pursuant to this part, pertaining to apartment houses, hotels, or dwellings.

(Added by Stats. 1961, c. 1844, p. 3924, § 8. Amended by Stats. 1979, c. 729, p. 2462, § 5; Stats. 1979, c. 1125, p. 4273, § 8725.)

§17966 Contracts for assistance

Cities or counties or fire protection districts may contract with the department for assistance by the department in the enforcement of the applicable provisions of this part, the building standards published in the State Building Standards Code, and the other rules and regulations promulgated pursuant to the provisions of this part within such cities or counties. Such contracts shall contain provisions for the payment of the costs of such enforcement, or portions thereof, as may be determined by the department.

(Added by Stats. 1961, c. 1844, p. 3924, § 8. Amended by Stats. 1979, c. 729, p. 2463, § 6; Stats. 1979, c. 1152, p. 4273, § 88.5.)

§17967 Records and reports of local enforcement agencies; examination; copies

The department may examine the records of the various city, city and county, or county departments charged with the enforcement of building standards published in the State Building Standards Code and the other rules and

regulations promulgated pursuant to the provisions of this part and secure from them reports and copies of their records at any time. The department shall pay the cost of duplicating such records.

(Added by Stats. 1979, c. 62, p. 157, § 6, eff. May 14, 1979. Amended by Stats. 1979, c. 1152, p. 4273, § 89.)

§17970 Authority to enter and inspect premises

Any officer, employee, or agent of an enforcement agency may enter and inspect any building or premises whenever necessary to secure compliance with, or prevent a violation of, any provision of this part, the building standards published in the State Building Standards Code, and other rules and regulations promulgated pursuant to the provisions of this part which the enforcement agency has the power to enforce.

(Added by Stats. 1961, c. 1844, 3924, § 8. Amended by Stats. 1979, c. 1152, p. 4274, § 90.)

§17971 Authority of owner to enter premises to carry out instruction or perform work

The owner, or authorized agent of any owner, of any building or premises may enter the building or premises whenever necessary to carry out any instructions, or perform any work required to be done pursuant to this part, the building standards published in the State Building Standards Code, and other rules and regulations promulgated pursuant to the provisions of this part.

(Added by Stats. 1961, c. 1844, p. 3924, § 8. Amended by Stats. 1979, c. 1152, p. 4274, § 91.)

§17972 Limitations on authority to enter

No person authorized by this article to enter buildings shall enter any dwelling between the hours of 6 o'clock p.m. of any day and 8 o'clock a.m. of the succeeding day, without the consent of the owner or of the occupants of the dwelling, nor enter any dwelling in the absence of the occupants without a proper written order executed and issued by a court having jurisdiction to issue the order.

(Added by Stats. 1961, c. 1844, p. 3924, § 8.)

§17980 Buildings in violation; notice to abate nuisance; instituting actions or proceedings; substandard buildings; repair or demolition; preferences; notice of violations; costs

(a) If any building is constructed, altered, converted, or maintained in violation of any provision of, or of any order or notice that gives a reasonable time to correct that violation issued by an enforcement agency pursuant to, this part, the building standards published in the California Building Standards Code, or other rules and regulations adopted pursuant to this part, or if a nuisance exists in any building or upon the lot on which it is situated, the enforcement agency shall, after 30 days' notice to abate the nuisance, institute any appropriate action or proceeding to prevent, restrain, correct, or abate the violation or nuisance.

(b) **(1)** Whenever the enforcement agency has inspected or caused to be inspected any building and has determined that the building is a substandard building or a building described in Section 17920.10, the enforcement agency shall commence proceedings to abate the violation by repair, rehabilitation, vacation, or demolition of the building. The enforcement agency shall not require the vacating of a residential building unless it concurrently requires expeditious demolition or repair to comply with this part, the building standards published in the California Building Standards Code, or other rules and regulations adopted pursuant to this part. The owner shall have the choice of repairing or demolishing. However, if the owner chooses to repair, the enforcement agency shall require that the building be brought into compliance according to a reasonable and feasible schedule for expeditious repair. The enforcement agency may require vacation and demolition or may itself vacate the building, repair, demolish, or institute any other appropriate action or proceeding, if any of the following occur:

(A) The repair work is not done as scheduled.

(B) The owner does not make a timely choice of repair or demolition.

(C) The owner selects an option which cannot be completed within a reasonable period of time, as determined by the enforcement agency, for any reason, including, but not limited to, an outstanding judicial or administrative order.

(2) In deciding whether to require vacation of the building or to repair as necessary, the enforcement agency shall give preference to the repair of the building whenever it is economically feasible to do so without having to repair more than 75 percent of the dwelling, as determined by the enforcement agency, and shall give full consideration to the needs for housing as expressed in the local jurisdiction's housing element.

(c) **(1)** Notwithstanding subdivision (b) and notwithstanding local ordinances, tenants in a residential building shall be provided notice of any violation described in subdivision (a) that affects the health and safety of the occupants and that violates Section 1941.1 of the Civil Code, an order of the code enforcement agency issued after inspection of the premises declaring the dwelling to be in violation of any provision described in subdivision (a), the enforcement agency's decision to repair or demolish, or the issuance of a building or demolition permit following the abatement order of an enforcement agency.

(2) Notice pursuant to this subdivision shall be provided to each affected residential unit by the enforcement agency that issued the order or notice, in the manner prescribed by subdivision (a) of Section 17980.6.

(d) All notices issued by the enforcement agency to correct violations or to abate nuisances shall contain a provision notifying the owner that, in accordance with Sections 17274 and 24436.5 of the Revenue and Taxation Code, a tax deduction may not be allowed for interest, taxes, depreciation, or amortization paid or incurred in the taxable year. In addition, in Los Angeles County, the notice shall contain a provision notifying the owner that within 10 days of recordation of a notice of substandard conditions or similar document, the owner is required to comply with Section 17997.

(e) The enforcement agency may charge the owner of the building for its postage or mileage cost for sending or posting the notices required to be given by this section.

(Amended by Stats. 1985, c. 1279, § 5; Stats. 1997, c. 55 (A.B.943), § 1; Stats. 1999, c. 391 (A.B.942), § 1; Stats. 2001, c. 487 (A.B.1112), § 2; Stats. 2002, c. 931 (S.B.460), § 3.)

§17980.1 Buildings hazardous to life in event of earthquake; retrofitting; conditions; noncompliance; notice; receiver; application; appointment; fees

(a) If a building is identified by a city, city and county, or county pursuant to Article 4 (commencing with Section 19160) of Chapter 2 of Part 3 of Division 13, or Section 8875.2 of the Government Code as being potentially hazardous to life in the event of an earthquake or is identified for any other reason to be hazardous to life in the event of an earthquake, an order requiring the building to be retrofitted to local building standards may be executed by the enforcement agency or its agents or contractors if all of the following conditions are satisfied:

(1) The hazardous condition is of a nature which would endanger the immediate health and safety of residents or the public in the event of an earthquake.

(2) The extent and nature of the hazardous condition is such that it could be corrected with the application of current technology.

(3) Any abatement order of the enforcement agency is not complied with or not so far complied with as the enforcement agency may regard as reasonable, within the time therein designated.

(b) If the owner does not comply with the abatement order within a reasonable time after issuance of the order, the enforcement agency may, as an alternative to any other remedy permitted under law, seek the remedy provided by this section if the court finds the owner in violation of the abatement order and finds that the abatement order was issued in order to correct a hazardous condition which would endanger the immediate health and safety of residents or the public in the event of an earthquake.

(c) After serving notice upon the owner not less than 48 hours prior to the filing of the application in accordance with the procedures for notice specified by this subdivision, the enforcement agency, in accordance with this section, Sections 17980.1 to 17980.3, inclusive, and Chapter 5 (commencing with Section 564) of Title 7 of Part 2 of the Code of Civil Procedure, may thereafter apply to the superior court in the county where the property is situated by petition for an order directing the owner and any mortgagees or lienors of record to show cause why

an individual or group as proposed by the enforcement agency should not be appointed as a receiver, and why the receiver should not remove or remedy the condition and obtain a lien, as provided in Section 17980.2, in favor of the enforcement agency against the property, with the lien having the priority as specified in subdivision (b) of Section 17980.2, to secure repayment of the costs incurred by the receiver in removing or remedying the condition. The application shall contain all of the following:

(1) Proof by affidavit that an abatement order of the enforcement agency has been issued and served on the owner, mortgagees, and lienors in accordance with this section, and that the notice containing the same particulars as are required in the abatement order, including the work to be done, has been filed in the office of the county recorder in which mechanic's liens affecting the property would be filed.

(2) A statement that the abatement order has not been complied with or not so far complied with as the enforcement agency may regard as reasonable within the time period therein designated.

(3) A statement that a condition which constitutes a serious earthquake hazard and is a serious threat to life, health, or safety continues to exist upon the property, and a description of the property and the factors constituting the unsafe condition.

(4) A plan describing how the receiver shall perform the required work, and how rents, issues, and profits shall be collected and distributed among the owner, mortgagee, lienor, and enforcement agency or receiver, and including an estimate as to the costs of the required work, the approximate time by which the repairs will be completed, a statement as to whether a displacement of any occupant is required, and provisions regarding assistance for displaced occupants.

(d) The order to show cause shall be returnable not less than five days after service is completed and shall provide for personal service of a copy thereof and the papers on which it is based on the owners and mortgagees of record and lienors. Alternative service may be made upon the owner by posting upon the property and thereafter mailing to the owner at the last known address, and upon the mortgagee or lienor by mailing to the address set forth in the recorded mortgage or lien and by publication in a newspaper of general circulation in the county where the premises are located. The service shall be completed on filing proof of service thereof in the office of the county clerk.

(e) On the return of the order to show cause, the proceeding regarding that order shall have precedence over every other business of the court, unless the court finds that some other pending proceeding, having a similar statutory precedence, shall have priority. If the court finds good cause therefor, and finds that the cost of repairs, when added to any encumbrances on the building, shall not exceed the projected value of the building when repaired, then the court shall appoint a receiver named in the application or another person deemed appropriate, in accordance with this section and Section 17980.2. However, prior to the appointment of a receiver, if the owner or any mortgagee or lienor or other person having an interest in the property applies to the court to be permitted to remove or remedy the conditions, and demonstrates the ability promptly to undertake the work required, and posts security for the performance thereof within the time, and in the amount and manner deemed necessary by the court, then the court may, in lieu of appointing the receiver, issue an order permitting that person to perform the work within a time fixed by the court.

(f) If the conditions have not been satisfactorily remedied or removed within the time fixed in the abatement order, then the court shall appoint a receiver. If, after granting a court order permitting a person to perform the work, but before the time fixed by the court for the completion thereof, it appears to the enforcement agency that the person permitted to do the work is not proceeding in a timely fashion, the enforcement agency may petition the court for a hearing to determine whether a receiver should be appointed immediately. On the failure of the owner, mortgagee, lienor, or other person having an interest in the property to complete the work in accordance with the provisions of the order, the costs of the receiver thereafter appointed in removing or remedying the condition, and for other charges herein provided for, shall be reimbursed, paid, or made subject to a lien pursuant to Section 17980.2, or any combination of these.

(g) Upon the appointment of a receiver by the court, which shall include the posting of a bond by the receiver, pursuant to subdivision (b) of Section 567 of the Code of Civil Procedure, a copy of the order making the

appointment, authenticated by a certificate of the clerk of the court and particularly describing the property which is subject to the receivership, shall be recorded in each county in which any portion of the land is located.

(h) In addition to the powers specifically requested by the enforcement agency for the receiver, the receiver shall be authorized to employ attorneys, accountants, contractors, architects, engineers, and other clerical and professional personnel to assist the receiver in the performance of these duties and responsibilities.

(i) Notwithstanding Section 6103 or 27383 of the Government Code, a county clerk or county recorder, or clerk of the court may charge a fee to any party, including a public agency, for the cost, incurred pursuant to this section, of filing, recording, or authentication of documents at the request of that party.

(Added by Stats. 1990, c. 192 (A.B.1279), § 2.)

§17980.2 Lien for costs; fee; contents; recording; expenses

(a) If the enforcement agency, in accordance with Section 17980.1, shall desire that the receiver obtain a lien for costs incurred in connection therewith in favor of the enforcement agency, the enforcement agency, within five days after the service of the abatement order upon the owner, shall serve a copy of the abatement order upon the lienor and mortgagee of record personally or by registered mail, return receipt requested, at the address set forth in the recorded mortgage or lien. A notice addressed to the mortgagee and lienor shall be appended to the copy of the abatement order, stating that in the event the unsafe conditions are not removed or remedied in the manner and within the time specified in the abatement order, the enforcement agency may apply to the superior court for an order to show cause why a receiver shall not be appointed.

(b) The enforcement agency or a receiver appointed pursuant to this section and Section 17980.1 may record a lien against the real property on which the building is located for the expenses necessarily incurred in the execution of the abatement order, for work done in carrying out the abatement order, and for the costs incurred by the county recorder in recording the lien. Notwithstanding Section 6103 or 27383 of the Government Code, the county recorder may charge a fee to any party for the cost, incurred pursuant to this section, of recording the lien at the request of that party. Liens authorized by this subdivision shall specify the amount of the lien, the name of the agency or agencies on whose behalf the lien is imposed, the date of the abatement order or the order of the court which required the work to be done, the name of the receiver, if any, appointed pursuant to Section 17980.1, and the legal description assessor's parcel number, and the record owner of the real property. The lien shall be recorded in the office of the county recorder of any county in which all or any portion of the real property is located, and from the date of recording shall have the force, effect, and priority of a judgment lien. The enforcement agency may defer payment of the lien until the property is sold or the enforcement agency may require that the lien be paid in installments. The amount of the lien authorized by this subdivision shall in no event exceed the reasonable costs of repair, as determined pursuant to Section 17980.3. Nothing in this section or in Section 17980.3 shall authorize the forced sale of the property to secure payment of the judgment lien.

(c) Whenever the enforcement agency has incurred expense for which payment is due under this section, Section 17980.3, or 17980.4, the enforcement agency may institute and maintain a suit against the owner of the building, and may recover the amount of that expense. In any case where expenditures have been made, or obligations incurred, by a receiver pursuant to Section 17980.3, and these are not paid or reimbursed from rents and income of the building, the receiver may institute and maintain a suit against the owner to recover the deficiency. Upon the awarding of a money judgment in any action authorized by this section, until the same is paid or discharged, the judgment shall be a lien like other judgments, pursuant to Chapter 2 (commencing with Section 697.010) of Division 2 of Title 9 of Part 2 of the Code of Civil Procedure.

(d) Unless, within six months after actual notice, proceedings to discharge the lien are undertaken by the party against whom, or against whose premises, a lien is claimed, the filing shall, as to all persons having actual notice, become conclusive evidence that the amount claimed in the lien, with interest, is due, and is a just lien upon the premises.

(e) Where there is more than one owner, except as the owners may have otherwise mutually agreed, any owner who removes or remedies the unsafe condition shall be entitled to recover a proportionate share of the total expense of the compliance from all other owners to whom the abatement order was issued.

(Added by Stats. 1990, c. 192, (A.B.1279), § 3.)

§17980.3 Receiver; powers and duties; fees and commissions; discharge

(a) Any receiver appointed pursuant to this section shall have all of the powers and duties conferred by this section, and Sections 17980.1 and 17980.2, and shall have the powers and duties of a receiver appointed in an action to foreclose a mortgage on real property, as provided in Chapter 5 (commencing with Section 564) of Title 7 of Part 2 of the Code of Civil Procedure. The receiver, with all reasonable speed, shall remedy the unsafe condition and remove all the delinquent matters and deficiencies in the building, as specified in the abatement order. Unless otherwise ordered by the court, the receiver shall have the power to let contracts therefor or incur expenses in accordance with the provisions of local laws, ordinances, rules, or regulations applicable to contracts for public works.

(b) If the conditions of the premises and repairs thereto significantly interfere with the peaceful enjoyment or safe and sanitary use of the premises by any tenant, the receiver shall arrange for comparable temporary housing which is decent, safe, and sanitary for each tenant required to be relocated. The receiver shall pay relocation costs to each tenant as provided in Section 7262 of the Government Code. The costs shall be limited to the time that the premises are being repaired. The receiver shall mail to the owner and tenants at least 30 days prior to completion of the repairs a notice that the unit will be available for occupancy. The tenant shall have 14 days from the date the receiver's notification was mailed to notify the landlord of his or her intent to reoccupy the dwelling unit. The tenant shall have seven days to reoccupy the unit once the unit is deemed habitable. Failure of the tenant to notify the owner and receiver of the tenant's intent to reoccupy the unit shall extinguish this right to reoccupy.

(c) The receiver shall be entitled to the same fees, commissions, and necessary expenses as receivers in actions to foreclose mortgages. These fees and commissions shall be paid into any fund created pursuant to Section 17980.5. The receiver shall be liable only in the receiver's official capacity for injury to person and property by reason of conditions of the premises in a case where an owner would have been liable. The receiver shall not be liable in the receiver's personal capacity. Upon the request of the receiver, the enforcement agency or the department, or both, shall make their personnel and facilities available to the receiver for the purpose of carrying out the receiver's duties as the receiver, and the cost of these services shall be deemed a necessary expense of the receiver.

(d) The receiver shall be discharged upon rendering a full and complete accounting to the court when the condition has been removed and the cost thereof and all other costs authorized by this section have been paid, reimbursed, or made subject to a lien pursuant to subdivision (b) of Section 17980.2, or any combination of these. Upon the removal of the condition, the owner, the mortgagee, or any lienor may apply for the discharge of the receiver of all moneys not expended by the receiver for removal of the condition and all other costs authorized by this section.

(Added by Stats. 1990, c. 192 (A.B.1279), § 4.)

§17980.4 Action for recovery of expenses incurred by enforcement agency; remedies; criminal and civil liability of owner

(a) Whenever the enforcement agency sues for the expenses involved in the execution of any order, it may join in the same suit and claim any civil remedy for the violation of any provisions of this chapter. Joint or several judgments may be had against one or more of the defendants in the suit, as they or any of them may be liable in respect of all or any of these claims. The expenses of executing the order, and any judgment in any abatement suit provided for in this chapter, and the several judgments that may be recovered for any of these expenses and judgments, until the same are paid or discharged, shall be a lien like other judgments, pursuant to Chapter 2 (commencing with Section 697.010) of Division 2 of Title 9 of Part 2 of the Code of Civil Procedure.

(b) Nothing in this section or in Sections 17980.1 to 17980.3, inclusive, shall be deemed to relieve the owner of any civil or criminal liability incurred or any duty imposed by reason of acts or omissions of the owner prior to the appointment of any receiver, nor shall anything contained to those sections be construed to suspend during the receivership any obligation of the owner for the payment of taxes or operating and maintenance expenses of the dwelling or any obligation of the owner or any other person for the payment of mortgages or liens. The remedies pursuant to this section or Sections 17980.1 to 17980.3, inclusive, shall be in addition to any other remedies provided by law.

(Added by Stats. 1990, c. 192, (A.B.1279), § 5.)

§17980.5 Special fund for implementation of §17980.1 to §17980.4
The local enforcement agency may establish and maintain a special fund for the purpose of implementing Sections 17980.1 to 17980.4, inclusive.

(Added by Stats. 1990, c. 192 (A.B. 1279), § 6.)

§17980.6 Violations; order or notice to repair, failure to correct; remedies of §17980.7 applicable
If any building is maintained in a manner that violates any provisions of this part, the building standards published in the State Building Standards Code relating to the provisions of this part, any other rule or regulation adopted pursuant to the provisions of this part, or any provision in a local ordinance that is similar to a provision in this part, and the violations are so extensive and of such a nature that the health and safety of residents or the public is substantially endangered, the enforcement agency may issue an order or notice to repair or abate pursuant to this part. Any order or notice pursuant to this subdivision shall be provided either by both posting a copy of the order or notice in a conspicuous place on the property and by first-class mail to each affected residential unit, or by posting a copy of the order or notice in a conspicuous place on the property and in a prominent place on each affected residential unit. The order or notice shall include, but is not limited to, all of the following:

(a) The name, address, and telephone number of the agency that issued the notice or order.

(b) The date, time, and location of any public hearing or proceeding concerning the order or notice.

(c) Information that the lessor cannot retaliate against a lessee pursuant to Section 1942.5 of the Civil Code.

(Added by Stats. 1988, c. 1567, § 1. Amended by Stats. 1999, c. 391 (A.B.942), § 2; Stats. 2001, c. 414 (A.B.472), § 4.)

§17980.7 Failure of owner to comply within a reasonable time with terms of order or notice pursuant to §17980.6
If the owner fails to comply within a reasonable time with the terms of the order or notice issued pursuant to Section 17980.6, the following provisions shall apply:

(a) The enforcement agency may seek and the court may order imposition of the penalties provided for under Chapter 6 (commencing with Section 17995).

(b) **(1)** The enforcement agency may seek and the court may order the owner to not claim any deduction with respect to state taxes for interest, taxes, expenses, depreciation, or amortization paid or incurred with respect to the cited structure, in the taxable year of the initial order or notice, in lieu of the enforcement agency processing a violation in accordance with Sections 17274 and 24436.5 of the Revenue and Taxation Code.

(2) If the owner fails to comply with the terms of the order or notice to correct the condition that caused the violation pursuant to Section 17980.6, the court may order the owner to not claim these tax benefits for the following year.

(c) The enforcement agency, tenant, or tenant association or organization may seek and the court may order, the appointment of a receiver for the substandard building pursuant to this subdivision. In its petition to the court, the enforcement agency, tenant, or tenant association or organization shall include proof that notice of the petition was served not less than three days prior to filing the petition, pursuant to Article 3 (commencing with Section 415.10) of Chapter 4 of Title 5 of Part 2 of the Code of Civil Procedure, to all persons with a recorded interest in the real property upon which the substandard building exists.

(1) In appointing a receiver, the court shall consider whether the owner has been afforded a reasonable opportunity to correct the conditions cited in the notice of violation.

(2) The court shall not appoint any person as a receiver unless the person has demonstrated to the court his or her capacity and expertise to develop and supervise a viable financial and construction plan for the satisfactory rehabilitation of the building. A court may appoint as a receiver a nonprofit organization or community development corporation. In addition to the duties and powers that may be granted pursuant to

this section, the nonprofit organization or community development corporation may also apply for grants to assist in the rehabilitation of the building.

(3) If a receiver is appointed, the owner and his or her agent of the substandard building shall be enjoined from collecting rents from the tenants, interfering with the receiver in the operation of the substandard building, and encumbering or transferring the substandard building or real property upon which the building is situated.

(4) Any receiver appointed pursuant to this section shall have all of the following powers and duties in the order of priority listed in this paragraph, unless the court otherwise permits:

(A) To take full and complete control of the substandard property.

(B) To manage the substandard building and pay expenses of the operation of the substandard building and real property upon which the building is located, including taxes, insurance, utilities, general maintenance, and debt secured by an interest in the real property.

(C) To secure a cost estimate and construction plan from a licensed contractor for the repairs necessary to correct the conditions cited in the notice of violation.

(D) To enter into contracts and employ a licensed contractor as necessary to correct the conditions cited in the notice of violation.

(E) To collect all rents and income from the substandard building.

(F) To use all rents and income from the substandard building to pay for the cost of rehabilitation and repairs determined by the court as necessary to correct the conditions cited in the notice of violation.

(G) To borrow funds to pay for repairs necessary to correct the conditions cited in the notice of violation and to borrow funds to pay for any relocation benefits authorized by paragraph (6) and, with court approval, secure that debt and any moneys owed to the receiver for services performed pursuant to this section with a lien on the real property upon which the substandard building is located. The lien shall be recorded in the county recorder's office in the county within which the building is located.

(H) To exercise the powers granted to receivers under Section 568 of the Code of Civil Procedure.

(5) The receiver shall be entitled to the same fees, commissions, and necessary expenses as receivers in actions to foreclose mortgages.

(6) If the conditions of the premises or the repair or rehabilitation thereof significantly affect the safe and sanitary use of the substandard building by any tenant, to the extent that the tenant cannot safely reside in his or her unit, then the receiver shall provide relocation benefits in accordance with subparagraph (A) of paragraph (3) of subdivision (d).

(7) The relocation compensation provided for in this section shall not preempt any local ordinance that provides for greater relocation assistance.

(8) In addition to any reporting required by the court, the receiver shall prepare monthly reports to the state or local enforcement agency which shall contain information on at least the following items:

(A) The total amount of rent payments received.

(B) Nature and amount of contracts negotiated relative to the operation or repair of the property.

(C) Payments made toward the repair of the premises.

(D) Progress of necessary repairs.

(E) Other payments made relative to the operation of the building.

(F) Amount of tenant relocation benefits paid.

(9) The receiver shall be discharged when the conditions cited in the notice of violation have been remedied in accordance with the court order or judgment and a complete accounting of all costs and repairs has been delivered to the court. Upon removal of the condition, the owner, the mortgagee, or any lienor of record may apply for the discharge of all moneys not used by the receiver for removal of the condition and all other costs authorized by this section.

(10) After discharging the receiver, the court may retain jurisdiction for a time period not to exceed 18 consecutive months, and require the owner and the enforcement agency responsible for enforcing Section 17980 to report to the court in accordance with a schedule determined by the court.

(11) The prevailing party in an action pursuant to this section shall be entitled to reasonable attorney's fees and court costs as may be fixed by the court.

(12) The county recorder may charge and collect fees for the recording of all notices and other documents required by this section pursuant to Article 5 (commencing with Section 27360) of Chapter 6 of Division 2 of Title 3 of the Government Code.

(13) Nothing in this section shall be construed to limit those rights available to tenants and owners under any other provision of the law.

(14) Nothing in this section shall be construed to deprive an owner of a substandard building of all procedural due process rights guaranteed by the California Constitution and the United States Constitution, including, but not limited to, receipt of notice of the violation claimed and an adequate and reasonable period of time to comply with any orders which are issued by the enforcement agency or the court.

(d) If the court finds that a building is in a condition which substantially endangers the health and safety of residents pursuant to Section 17980.6, upon the entry of any order or judgment, the court shall do all of the following:

(1) Order the owner to pay all reasonable and actual costs of the enforcement agency including, but not limited to, inspection costs, investigation costs, enforcement costs, attorney fees or costs, and all costs of prosecution.

(2) Order that the local enforcement agency shall provide the tenant with notice of the court order or judgment.

(3) **(A)** Order that if the owner undertakes repairs or rehabilitation as a result of being cited for a notice under this chapter, and if the conditions of the premises or the repair or rehabilitation thereof significantly affect the safe and sanitary use of the premises by any lawful tenant, so that the tenant cannot safely reside in the premises, then the owner shall provide or pay relocation benefits to each lawful tenant. These benefits shall consist of actual reasonable moving and storage costs and relocation compensation. The actual moving and storage costs shall consist of all of the following:

(i) Transportation of the tenant's personal property to the new location. The new location shall be in close proximity to the substandard premises, except where relocation to a new location beyond a close proximity is determined by the court to be justified.

(ii) Packing, crating, unpacking, and uncrating the tenant's personal property.

(iii) Insurance of the tenant's property while in transit.

(iv) The reasonable replacement value of property lost, stolen, or damaged (not through the fault or negligence of the displaced person, his or her agent or employee) in the process of moving, where insurance covering the loss, theft, or damage is not reasonably available.

(v) The cost of disconnecting, dismantling, removing, reassembling, reconnecting, and reinstalling machinery, equipment, or other personal property of the tenant, including connection charges imposed by utility companies for starting utility service.

(B) **(i)** The relocation compensation shall be an amount equal to the differential between the contract rent and the fair market rental value determined by the federal Department of Housing and Urban Development for a unit of comparable size within the area for the period that the unit is being repaired, not to exceed 120 days.

(ii) If the court finds that a tenant has been substantially responsible for causing or substantially contributing to the substandard conditions, then the relocation benefits of this section shall not be paid to this tenant. Each other tenant on the premises who has been ordered to relocate due to the substandard conditions and who is not substantially responsible for causing or contributing to the conditions shall be paid these benefits and moving costs at the time that he or she actually relocates.

(4) Determine the date when the tenant is to relocate, and order the tenant to notify the enforcement agency and the owner of the address of the premises to which he or she has relocated within five days after the relocation.

(5) **(A)** Order that the owner shall offer the first right to occupancy of the premises to each tenant who received benefits pursuant to subparagraph (A) of paragraph (3), before letting the unit for rent to a third party. The owner's offer on the first right to occupancy to the tenant shall be in writing, and sent by first-class certified mail to the address given by the tenant at the time of relocation. If the owner has not been provided the tenant's address by the tenant as prescribed by this section, the owner shall not be required to provide notice under this section or offer the tenant the right to return to occupancy.

(B) The tenant shall notify the owner in writing that he or she will occupy the unit. The notice shall be sent by first-class certified mail no later than 10 days after the notice has been mailed by the owner.

(6) Order that failure to comply with any abatement order under this chapter shall be punishable by civil contempt, penalties under Chapter 6 (commencing with Section 17995), and any other penalties and fines as are available.

(e) The initiation of a proceeding or entry of a judgment pursuant to this section or Section 17980.6 shall be deemed to be a "proceeding" or "judgment" as provided by paragraph (4) or (5) of subdivision (a) of Section 1942.5 of the Civil Code.

(f) The term "owner," for the purposes of this section, shall include the owner, including any public entity that owns residential real property, at the time of the initial notice or order and any successor in interest who had actual or constructive knowledge of the notice, order, or prosecution.

(g) These remedies shall be in addition to those provided by any other law.

(h) Nothing in this section or in Section 17980.6 shall impair the rights of an owner exercising his or her rights established pursuant to Chapter 12.75 (commencing with Section 7060) of Division 7 of Title 1 of the Government Code.

(Added by Stats. 1988, c. 1567, § 2. Amended by Stats. 1989, c. 1194, § 1; Stats. 1990, c. 1334 (A.B.3492), § 1; Stats. 1995, c. 906 (A.B.457), § 2; Stats. 2001, c. 414 (A.B.472), § 5; Stats. 2001, c. 594 (A.B.1467), § 1.5).

§17980.8 Administrative determination of unsafe or substandard condition; abatement or other exercise of authority; owner exclusive remedy; judicial review standard; application of section

Text of section as added by Stats. 1989, c. 376, § 1.

Notwithstanding any other provision of law, if a determination that an unsafe or substandard condition exists in any building, or upon the lot upon which it is situated, has been made in an administrative proceeding conducted under this part, including any code incorporated by Section 17922, the enforcement agency may abate the nuisance as provided in this part or exercise any other authority conferred upon it by this part, subject only to the exclusive remedy of the owner to challenge the administrative determination pursuant to Section 1094. 5 of the Code of Civil Procedure. The court may exercise its independent judgment on the evidence to determine whether the findings are supported by the weight of the evidence. This section shall apply only to administrative proceedings commenced on or after January 1, 1990.

(Added by Stats. 1989, c. 376, § 1.)

For Text of section as added by Stats. 1989, c. 1194, § 2, see Health and Safety Code §17980.8, post.

§17980.8 Jurisdiction to abate nuisance through repairs, razing or removal; expense statement; liability of property owner

Text of section as added by Stats. 1989, c. 1194, § 2.

(a) An enforcement agency which properly declares any dwelling a nuisance and, using the notice requirements and procedures specified in Subchapter 1 (commencing with Section 1) of Chapter 1 of Part 1 of Title 25 of the California Code of Regulations, confirms the declaration by resolution of its governing board shall be deemed to have acquired jurisdiction to abate the nuisance by repairing or causing to have repairs made to the property, by razing or removing the dwelling or in any other way causing the nuisance to be abated.

(b) The enforcement agency shall keep an itemized account of all of the expenses involved in abating the nuisance, including the razing or removing of the dwelling. The enforcement agency shall cause to be posted conspicuously on the property from which the nuisance was abated, repairs made or from which the dwelling was razed or removed, an expense statement. This statement shall be verified by the officer of the enforcement agency in charge of doing the work, showing the reasonable gross and net expense of the abatement actions taken by the agency, including the expense of inspections; repairs, if any; the cost of the razing or removing of the building, if applicable; and any other costs of abatement, together with a notice of the time and place when and where the statement shall be submitted to the governing board of the enforcement agency for approval and confirmation. In addition to being posted on the property, this statement shall be sent by certified mail to each owner and other interested party, as specified in Subchapter 1 (commencing with Section 1) of Chapter 1 of Part 1 of Title 25 of the California Code of Regulations.

(c) At the meeting noticed pursuant to subdivision (b), the governing board shall consider any objections or protests, if any, which may be raised by the property owner liable to be assessed for the cost of such work, or by any other interested persons. If the governing board confirms the statement of costs of abatement, those costs shall be the obligation of each owner of the property to pay to the public entity which has incurred them.

(d) Notwithstanding any other provision of law, any hearing required under this section shall be conducted in accordance with requirements adopted by the enforcement agency that are in substantial compliance with those contained in Chapter 13 (commencing with Section 1301), or the successor provisions to that chapter, of the most recent edition of the Uniform Housing Code of the International Conference of Building Officials.

(Added by Stats. 1989, c. 1194, §2.)

For text of section as added by Stats. 1989, c. 376, § 1, see Health and Safety Code §17980.8, ante.

§17980.9 City of Los Angeles or City of San Diego; inspection of vacant single-family dwellings; action to correct violations or abate nuisances; tax notice; reimbursement of costs

Notwithstanding Section 17980, whenever the enforcement agency inspects any vacant single-family dwelling within the City of Los Angeles or the City of San Diego pursuant to this chapter, all of the following shall apply:

(a) If a nuisance exists in any vacant single-family dwelling or upon the lot on which it is situated, the enforcement agency shall, after 15 days' notice to abate the nuisance, institute any appropriate action or proceeding to prevent, restrain, correct, or abate the nuisance.

(b) **(1)** Whenever the enforcement agency has inspected or caused to be inspected any vacant single-family dwelling and has determined that the building is a substandard dwelling, the enforcement agency shall, after giving 15 days' notice to the owner, commence proceedings to abate the violation by repair, rehabilitation, or demolition of the building. The owner shall have the choice of repairing or demolishing. However, if the owner chooses to repair, the enforcement agency shall require that the building be brought into compliance according to a reasonable and feasible schedule for expeditious repair. The enforcement agency may require demolition or may itself repair, demolish, or institute any other appropriate action or proceeding, if any of the following occur:

(A) The repair work is not done as scheduled.

(B) The owner does not make a timely choice of repair or demolition.

(C) The owner selects an option that cannot be completed within a reasonable period of time, as determined by the department, for any reason, including, but not limited to, an outstanding judicial or administrative order.

(2) In deciding whether to repair as necessary, the enforcement agency shall give preference to the repair of the building whenever it is economically feasible to do so without having to repair more than 50 percent of the dwelling, as determined by the enforcement agency, and shall give full consideration to the needs for housing as expressed in the local jurisdiction's housing element.

(c) All notices issued by the enforcement agency to correct violations or to abate nuisances shall contain a provision notifying the owner that, in accordance with Sections 17274 and 24436.5 of the Revenue and Taxation Code, a tax deduction may not be allowed for interest, taxes, depreciation, or amortization paid or incurred in the taxable year.

(d) The enforcement agency may charge the owner of the building for its postage or mileage cost for sending or posting the notices required to be given by this section.

(Added by Stats. 1997, c. 55 (A.B.943), § 2. Amended by Stats. 2001, c. 594 (A.B.1467), § 2.)

§17981 Temporary relief pending final judgment

An enforcement agency which institutes any action or proceeding pursuant to this article may, by verified complaint setting forth the facts, apply to the superior court for an order granting the relief for which the action or proceeding is brought until the entry of a final judgment or order.

(Added by Stats. 1961, c. 1844, p. 3925, § 8.)

§17982 Order to remove violation or abate nuisance

If any notice or order issued by an enforcement agency is not complied with within a reasonable time as specified in such notice or order the enforcement agency may apply to the superior court for an order authorizing it to remove any violation or abate any nuisance specified in the notice or order.

(Added by Stats. 1961, c. 1844, p. 3925, § 8.)

§17983 Powers of court
The superior court may make any order for which application is made pursuant to this article.

(Added by Stats. 1961, c. 1844, p. 3925, § 8.)

§17984 Liability for costs
Neither an enforcement agency, any of its officers, nor any city or county for which an enforcement agency may act, is liable for costs in any action or proceeding that the enforcement agency may commence pursuant to this article.

(Added by Stats. 1961, c. 1844, p. 3925, § 8.)

§17985 Notice of pending action; effect; notice of final dispositions; recording
(a) Any enforcement agency which institutes an action or proceeding pursuant to this article shall record a notice of the pendency of the action or proceeding in the county recorder's office of the county where the property affected by the action or proceeding is situated. The enforcement agency may charge the property owner for any cost involved in recording the notice. The enforcement agency shall reimburse the owner for any amount charged if the case is dismissed or if the defendant is found innocent. The notice shall be recorded at the time of the commencement of the action or proceeding. It has the same effect as the notice of pendency of action provided for in the Code of Civil Procedure.

(b) The enforcement agency shall record a notice of final disposition of any action or proceeding in the county recorder's office where the property affected by the action or proceeding was recorded immediately following final resolution of the action or proceeding.

(Added by Stats. 1961, c. 1844, p. 3925, § 8. Amended by Stats. 1974, c. 839, p. 1804, § 25; Stats. 1975, c. 201, p. 575, § 3; Stats. 1982, c. 1545, § 3.)

§17986 Recordation of notice
The county recorder with whom a notice of pendency of action or proceeding is filed shall record and index it in the name of each person to be specified in a direction subscribed by an officer of the enforcement agency instituting the action or proceeding.

(Added by Stats. 1961, c. 1844, p. 3924, § 8.)

§17987 Vacation of notice
Any notice of pendency of action or proceeding may be vacated upon the order of a judge of the court in which the action or proceeding is pending. A certified copy of the order of vacation may be recorded in the office of the recorder of the county where the notice of pendency of action is recorded.

(Added by Stats. 1961, c. 1844, p. 3925, § 8.)

§17988 Service of summons
In any action or proceeding brought pursuant to this article, service of summons is sufficient if served in the manner provided in the Code of Civil Procedure.

(Added by Stats. 1961, c. 1844, p. 3925, § 8.)

§17989 Service of notices and orders; time for service
Except under conditions immediately affecting health or safety, every notice or order issued pursuant to this part shall be served five days before the time for doing or refraining from doing the thing to which it pertains.

(Added by Stats. 1961, c. 1844, p. 3925, § 8.)

§17990 Pleading in response to summons; time to file
The time to file a written pleading in response to a summons in an action brought pursuant to this article is 10 days.

(Added by Stats. 1976, c. 807, p. 1756, § 1.)

California Accessibility Regulations

R E G U L A T I O N S
TABLE OF CONTENTS
ACCESSIBILITY PROVISIONS

PART 1 – CALIFORNIA BUILDING STANDARDS ADMINISTRATIVE CODE

CHAPTER 5. ACCESS TO PUBLIC BUILDINGS BY PHYSICALLY HANDICAPPED PERSONS

Page Numbers

ARTICLE 1. COMPLIANCE PROCEDURES
5-101 PURPOSE 1
5-102 GENERAL 1
5-103 APPLICATION 1
5-104 FEES 2
5-105 PROJECT COST 3
5-106 REVISION OF PLANS AND SPECIFICATIONS 3
5-107 BILLING FOR FURTHER FEES 4
5-108 REFUNDS 4
5-109 REVIEW OF PLANS AND SPECIFICATIONS 4
5-110 WRITTEN APPROVAL 4
5-111 GENERAL REQUIREMENTS 5

ARTICLE 2. DIVISION OF THE STATE ARCHITECT – ACCESS COMPLIANCE PROCESSING PRODUCT APPROVALS JANUARY 1, 2001
5-201 PROCESSING INDEPENDENT ENTITY EVALUATION APPROVALS (IEEA) 5
5-202 IEAA APPLICATION PROCEDURE 5
5-203 IEEA ACCEPTANCE PROCEDURE 5
5-204 ACCOUNTING OF IEEA 5
5-205 CONTRACTS FOR QUESTIONS 5

ARTICLE 3. ACCEPTANCE OF DETECTABLE WARNING AND DIRECTIONAL SURFACE PRODUCTS FOR MANUFACTURERS AND DESIGN PROFESSIONALS JANUARY 1, 2001
5-301 DSA/AC ACCEPTANCE OF PRODUCT 6
5-301.1 PRODUCT SUBMITTAL 6

5-301.2 DSA/AC PRODUCTS EXEMPT FROM EVALUATION BY A RECOGNIZED AGENCY 6
5-301.3 PRODUCTS EVALUATED BY RECOGNIZED STATE AND CITY AGENCIES 6
5-301.4 PRODUCTS EVALUATED BY A RECOGNIZED EVALUATION AGENCY 6
5-301.5 DEVELOPMENT OF DSA ACCEPTANCE CRITERIA 6
5-301.6 MARKING 6

ARTICLE 4. APPLICATION FOR INDEPENDENT ENTITY EVALUATION APPROVAL (IEEA) 5-401 APPLICATION FOR IEEA 7

HISTORY NOTE APPENDIX FOR CHAPTER 5 8

PART 2 - THE CALIFORNIA BUILDING CODE

CHAPTER 1. ADMINISTRATION

101.1 TITLE 9
101.2 PURPOSE 9
101.3 SCOPE 9
101.4 EFFECTIVE DATE 9
101.5 FORMAT 9
101.6 VALIDITY 9
101.7 STANDARD REFERENCED DOCUMENTS 10
101.8 NON BUILDING REGULATIONS 10
101.9 ORDER OF PRECEDENCE 10
101.16 AVAILABILITY OF CODE 10
101.17 APPLICATION 10

CHAPTER 2. DEFINITIONS AND ABBREVIATIONS
DEFINITIONS .... 13 thru 23

CHAPTER 3. USE OR OCCUPANCY
301 OCCUPANCY CLASSIFIED 25
310 REQUIREMENTS FOR GROUP R OCCUPANCIES 25
311 REQUIREMENTS FOR GROUP S OCCUPANCIES 25

CHAPTER 4. SPECIAL USE AND OCCUPANCY
405 STAGES AND PLATFORMS 27

CHAPTER 5. GENERAL BUILDING LIMITATIONS
509 GUARDRAILS 31

CHAPTER 10. MEANS OF EGRESS

1001 ADMINISTRATIVE 31
1003 GENERAL 31
1005 EXIT 35
1008 REVIEWING STANDS, GRANDSTANDS, BLEACHERS, AND FOLDING AND TELESCOPING SEATING 35

CHAPTER 11. ACCESSIBILITY

ACCESSIBILITY 37

CHAPTER 11A. HOUSING ACCESSIBILITY

1101A SCOPE 39
1102A DEFINITIONS 39
1103A BUILDING ACCESSIBILITY 43
1104A GROUP U OCCUPANCIES 43
1105A GROUP R OCCUPANCIES 43
1106A DOOR SIGNAL DEVICES 44
1107A DESIGN AND CONSTRUCTION 44
1108A EGRESS AND AREAS OF REFUGE 46
1109A FACILITY ACCESSIBILITY 46
TABLE 1109A.2-1 BATHROOMS 49
TABLE 1109A.2-2 BATHROOMS 50
1110A ELEVATORS AND SPECIAL ACCESS (WHEELCHAIR) LIFTS 51
1111A TELEPHONES 53
1112A KITCHENS 54
1113A SWIMMING POOLS/DRINKING FOUNTAINS 55
1114A SIGNS 55
1115A LAUNDRY ROOMS 55
1116A FLOORING 56
1117A EXTERIOR ROUTES OF TRAVEL 56
1118A PARKING FACILITIES 57
1119A REQUIREMENTS FOR ACCESSIBLE ROUTES IN COVERED BUILDINGS WITHOUT AN ELEVATOR 59
1120A GENERAL ACCESSIBILITY FOR ENTRANCES, EXITS AND PATHS OF TRAVEL 61

CHAPTER 11B ACCESSIBILITY TO PUBLIC BUILDINGS, PUBLIC ACCOMMODATIONS, COMMERCIAL BUILDINGS AND PUBLICLY FUNDED HOUSING
DIVISION I – NEW BUILDINGS....73
1101B SCOPE....73
1102B DEFINITIONS....73
1103B BUILDING ACCESSIBILITY....76
1104B ACCESSIBILITY FOR GROUP A OCCUPANCIES....76
TABLE 11B-1 – WHEELCHAIR SEATING SPACES....77
1105B ACCESSIBILITY FOR GROUP B OCCUPANCIES....81
1106B ACCESSIBILITY FOR GROUP E OCCUPANCIES....82
1107B FACTORIES AND WAREHOUSES....83
1108B ACCESSIBILITY FOR GROUP H OCCUPANCIES....84
1109B ACCESSIBILITY FOR GROUP I OCCUPANCIES....84
1110B ACCESS FOR GROUP M OCCUPANCIES....85
TABLE 11B-2 -- CHECKSTANDS....86
1111B ACCESSIBILITY FOR GROUP R OCCUPANCIES....87
TABLE 11B-3 – ADDITIONAL ACCESSIBILITY REQUIRED IN GUEST ROOMS OR SUITES....89
TABLE 11B-4 – ADDITIONAL ACCESSIBILITY REQUIRED FOR HEARING IMPAIRED IN GUEST ROOMS....90
1112B ACCESSIBILITY FOR GROUP S OCCUPANCIES....90
1113B ACCESSIBILITY FOR GROUP U OCCUPANCIES....90
1114B FACILITY ACCESSIBILITY....90
1115B BATHING AND TOILET FACILITIES....93
TABLE 1115B-1 SUGGESTED DIMENSIONS FOR CHILDREN'S USE....100
1116B ELEVATORS AND SPECIAL ACCESS (WHEELCHAIR) LIFTS....101
1117B OTHER BUILDING COMPONENTS....105
TABLE 11B-5 MAXIMUM REACH DEPTH FOR AUTOMATED TELLER MACHINES....113
1118B SPACE ALLOWANCE AND REACH RANGES....113
1119B SPECIAL STANDARDS OF ACCESSIBILITY FOR BUILDINGS WITH HISTORICAL SIGNIFICANCE....114
1120B FLOORS AND LEVELS....114
1121B RESERVED....114
1122B FIXED OR BUILT-IN SEATING, TABLES, AND COUNTERS....114
1123B ACCESS TO EMPLOYEE AREAS....115
1124B GROUND AND FLOOR SURFACES....115
1125B STORAGE....115
1126B VENDING MACHINES....115

DIVISION II – SITE ACCESSIBILITY 116
1127B EXTERIOR ROUTES OF TRAVEL 118
1128B PEDESTRIAN GRADE SEPARATIONS (OVERPASSES AND UNDERPASSES) 118
1129B ACCESSIBLE PARKING REQUIRED 118
TABLE 11B-6 NUMBER OF ACCESSIBLE PARKING SPACES REQUIRED 119
1130B PARKING STRUCTURES 120
1131B PASSENGER DROP-OFF AND LOADING ZONES 120
1132B OUTDOOR OCCUPANCIES 121

DIVISION III– ACCESSIBILITY FOR ENTRANCES, EXITS AND PATHS OF TRAVEL 123
1133B GENERAL ACCESSIBILITY FOR ENTRANCES, EXITS AND PATHS OF TRAVEL 123

DIVISION IV– ACCESSIBILITY FOR EXISTING BUILDINGS 134
1134B ACCESSIBILITY FOR EXISTING BUILDINGS 134
1135B HISTORIC PRESERVATION-SPECIAL STANDARDS OF ACCESSIBILITY FOR BUILDINGS WITH HISTORICAL SIGNIFICANCE 136

CHAPTER 11C STANDARDS FOR CARD READERS AT GASOLINE FUEL DISPENSING FACITLITES
1101C CARD READER DEVICES AT FUEL DISPENSING EQUIPMENT 195
1102C APPLICATION 195
1103C NUMBER OF ACCESSIBLE CARD-READING DEVICES REQUIRED 196
1104C REQUIRED FEATURES 196
1105C PROTECTION OF DISPENSERS MOUNTED AT GRADE 196

CHAPTER 24
GLASS AND GLAZING 199

CHAPTER 29
PLUMBING SYSTEMS 201

CHAPTER 30 ELEVATORS, DUMBWAITERS, ESCALATORS, AND MOVING WALKS
3001 SCOPE 203
3003 SPECIAL PROVISIONS 203

CHAPTER 31B PUBLIC SWIMMING POOLS
3113B POOL DECKS 207

CHAPTER 34 EXISTING STRUCTURES
DIVISION I
3401 GENERAL 209
DIVISION II STATE HISTORICAL BUILDING CODE 210
CHAPTER 8-1 ADMINISTRATION
8-101 TITLE, PURPOSE AND INTENT 211
8-102 APPLICATION 211
8-103 ORGANIZATION AND ENFORCEMENT 212
8-104 REVIEW AND APPEALS 212
8-105 CONSTRUCTION METHODS AND MATERIALS 212
8-106 SHBSB RULINGS 212
CHAPTER 8-2
DEFINITIONS 213
CHAPTER 8-3 USE AND OCCUPANCY
8-301 PURPOSE AND SCOPE 217
8-302 GENERAL 217
8-303 RESIDENTIAL OCCUPANCIES 217
CHAPTER 8-4 FIRE PROTECTION
8-401 PURPOSE, INTENT & SCOPE 218
8-402 FIRE RESISTIVE CONSTRUCTION 219
8-403 INTERIOR FINISH MATERIALS 219
8-404 WOOD LATH AND PLASTER 219
8-405 OCCUPANCY SEPARATION 219
8-406 MAXIMUM FLOOR AREA 219
8-407 VERTICAL SHAFTS 220
8-408 ROOF COVERING 220
8-409 FIRE ALARM SYSTEMS 220
8-410 AUTOMATIC FIRE EXTINGUISHING SYSTEMS 220
CHAPTER 8-5 MEANS OF EGRESS
8-501 PURPOSE, INTENT AND SCOPE 220
8-502 GENERAL 221
8-503 ESCAPE OR RESCUE WINDOWS AND DOORS 222
CHAPTER 8-6 ALTERNATIVE ACCESSIBILITY PROVISIONS
8-601 PURPOSE, INTENT AND SCOPE 222
8-602 BASIC PROVISIONS 222
8-603 PREFERRED ALTERNATIVES 222
8-604 EQUIVALENT FACILITATION 223
8-605 EXCEPTIONS 224
CHAPTER 8-7 ALTERNATIVE STRUCTURAL REGULATIONS
8-701 PURPOSE, INTENT AND SCOPE 224
8-702 GENERAL 224
8-703 STRUCTURAL SURVEY 225

8-704 NONHISTORICAL ADDITIONS
AND NONHISTORICAL ALTERATIONS 225
8-705 STRUCTURAL REGULATIONS 225
8-706 LATERAL LOAD REGULATIONS 225
CHAPTER 8-8 ARCHAIC MATERIALS AND METHODS OF CONSTRUCTION
8-801 PURPOSE, INTENT AND SCOPE 226
8-802 GENERAL ENGINEERING APPROACH 226
8-803 NONSTRUCTURAL ARCHAIC MATERIALS....227
8-804 ALLOWABLE CONDITIONS FOR SPECIFIC MATERIALS 227
8-805 MASONRY 227
8-806 ADOBE 228
8-807 WOOD....228
8-808 CONCRETE 229
8-809 STEEL AND IRON....229
8-810 HOLLOW CLAY TILE 229
8-811 VENEERS 229
8-812 GLASS & GLAZING....229
TABLE 8-8A ALLOWABLE VALUES FOR EXISTING MATERIALS....230
TABLE 8-8B ALLOWABLE VALUES OF NEW MATERIALS USED IN
CONJUNCTION WITH EXISTING CONSTRUCTION 231
CHAPTER 8-9 MECHANICAL, PLUMBING AND ELECTRICAL REQUIREMENTS
8-901 PURPOSE, INTENT AND SCOPE 232
8-902 MECHANICAL....232
8-903 PLUMBING 233
8-904 ELECTRICAL....235

CHAPTER 8-10 HISTORIC DISTRICTS SITES AND OPEN SPACES
8-1001 PURPOSE, SCOPE AND APPLICABILITY 236
8-1002 SITE RELATIONS....236

CHAPTER 35 UNIFORM BUILDING CODE STANDARDS
3504 RECOGNIZED STANDARDS 237
3505 AMENDMENTS TO NATIONAL STANDARDS 240
3506 CALIFORNIA STANDARDS 251

PART 3 – CALIFORNIA ELECTRICAL CODE

STATE ARTICLE 089
ADMINISTRATION 253

CHAPTER 2 WIRING AND PROTECTION
ARTICLE 210 - BRANCH CIRCUITS 257

CHAPTER 3 WIRING METHODS & MATERIALS
ARTICLE 346 - RIGID METAL CONDUIT 259
ARTICLE 380 - SWITCHES 259

CHAPTER 5 SPECIAL OCCUPANCIES
ARTICLE 540 - MOTION PICTURE PROJECTIONS 261

CHAPTER 7 SPECIAL CONDITIONS
ARTICLE 760 – FIRE ALARM SYSTEMS 263

PART 5 - THE CALIFORNIA PLUMBING CODE

CHAPTER 1 ADMINISTRATION
101.1 TITLE 265
101.2 PURPOSE 265
101.4 SCOPE 265
101.6 NONBUILDING REGULATIONS 266
101.7 ORDER OF PRECEDENCE 266
101.8 FORMAT 266
101.9 VALIDITY 266
101.10 STANDARD REFERENCE DOCUMENTS 266
101.11 APPLICATION-VESTING AUTHORITY 266

101.11.9 DIVISION OF THE STATE ARCHITECT; ACCESS COMPLIANCE 266

CHAPTER 2
DEFINITIONS 269

CHAPTER 3
GENERAL REGULATIONS 271

CHAPTER 4 PLUMBING FIXTURES AND FIXTURE FITTINGS
412.0 FLOOR DRAINS AND SHOWER STALLS 273
MINIMUM PLUMBING FACILITIES
TABLE 4-1 275
TABLE 4-2 279
TABLE 4-3 281
TABLE 4-4 283

CHAPTER 16 PLUMBING REQUIREMENS FOR ACCOMMODATION OF PERSONS WITH PHYSICAL DISABILITIES
1601.0 GENERAL 285

HISTORY NOTE APPENDIX 287

PART 8 - THE CALIFORNIA HISTORICAL BUILDING CODE

CHAPTER 8-6 ALTERNATIVE ACCESSIBILITY PROVISIONS 289

PART 9 - THE CALIFORNIA FIRE CODE

ARTICLE 52 MOTOR VEHICLE FUEL-DISPENSING STATIONS 291

PART 12 - THE CALIFORNIA REFERENCED STANDARDS CODE

CHAPTERS 12-11A and 12-11B BUILDING AND FACILITY ACCESS SPECIFICATIONS
12-11A.201 AND 12-11B.201 DETECTABLE WARNINGS 293
12-11A.202 AND 12-11B.202 PRODUCT APPROVAL FOR DETECTABLE WARNING PRODUCTS AND DIRECTIONAL SURFACES 293
12-11A.203 AND 12-11B.203 DETECTABLE WARNING PRODUCTS 293
12-11A.204 AND 12-11B.204 DIRECTIONAL SURFACES 293
12-11A.205 AND 12-11B.205 INDEPENDENT ENTITY 293
12-11A.206 AND 12-11B.206 TWO – YEAR APPROVAL 293
12-11A.207 AND 12-11B.207 FEE 293
12-11A.208 AND 12-11B.208 DISABILITY ACCESS ACCOUNT 293
12-11A.209 AND 12-11B.209 DETECTABLE WARNING PRODUCTS AND DIRECTIONAL SURFACES 293
12-11A.210 AND 12-11B.210 SIGNIFICANT DEGRADATION 294
12-11A.211 AND 12-11B.211 SELECTION OF INDEPENDENT ENTITY 294

CHAPTERS 12-35 CALIFORNIA BUILDING STANDARDS
12-35-101 AMERICAN NATIONAL STANDARDS INSTITUTE (ANSI) 17.1-86) 295
12-35-102 CALIFORNIA CODE OF REGULATIONS (CCR) 295
12-35-103 NATIONAL FIRE PROTECTION ASSOCIATION (NFPA) 72-96 (NATIONAL FIRE ALARM CODE) 295

HISTORY NOTE APPENDIX 297

2001 California Building Standards Administrative Code

California Code of Regulations Title 24, Part 1

See History Notes for Effective Dates

Chapter 5
ACCESS TO PUBLIC BUILDINGS BY PHYSICALLY HANDICAPPED PERSONS

Article 1. Compliance Procedures

5-101. Purpose. These regulations implement Sections 4450 et seq. of the Government Code to ensure that where state funds are utilized for the construction or alteration of any public building or facility or where the funds of counties, municipalities, or other political subdivisions are utilized for the construction or alteration of elementary, secondary or community college buildings and facilities that the plans and specifications for such buildings and facilities are reviewed by the Division of the State Architect, Office of Regulation Services (DSA/ORS) and certified to be in compliance with the "Access to Public Buildings by Physically Handicapped Persons Law" prior to a contract being awarded.

Authority: Government Code Sections 4450, 4453 and 4454.
Reference: Government Code Section 4454.

HISTORY:

1. New Group 2 (§§ 81 through 86) filed 3-5-71 as an emergency; effective on filing. Certificate of Compliance included (Register 71,No. 10). For history of former Group 2 see Register 66, No. 38.

2. Amendment filed 11-24-78; designated effective 1-1-79 (Register 78, No. 47).

5-102. General. For the purpose of assuring compliance with handicapped design requirements, the governmental agency controlling the appropriation from which the project is funded shall submit an application, together with plans and full, complete, and accurate specifications and filing fee, to the State Architect. The DSA/ORS will process the documents. Written approval shall be obtained prior to award of a construction contract.

Authority: Government Code Section 4453.
Reference: Government Code Section 4454.

HISTORY:

1. Amendment filed 11-24-78; designated effective 1-1-79 (Register 78, No. 47).

5-103. Application. For each project to be reviewed and certified, a separate application (Form No. ORS-1) shall be submitted to the DSA/ORS. The application shall be accompanied by a complete set of project plans and specifications and an appropriate filing fee (see Section 5-104).

The above documents shall be submitted to either of the following offices:

DIVISION OF THE STATE ARCHITECT
HEADQUARTERS OFFICE
ACCESS COMPLIANCE PROGRAM
1130 K Street, Suite 101
Sacramento, California 95814

DIVISION OF THE STATE ARCHITECT
BAY AREA OFFICE -- I
1515 Clay Street, Suite 1201
Oakland, California 94612

DIVISION OF THE STATE ARCHITECT
SACRAMENTO OFFICE -- II
1225 R Street
Sacramento, CA 95814

DIVISION OF THE STATE ARCHITECT
LOS ANGELES BASIN OFFICE – III
107 South Broadway, Room 3029*
Los Angeles, California 90073
Attention: Access Compliance Section

DIVISION OF THE STATE ARCHITECT
SAN DIEGO OFFICE -- IV
Reselent Business Park
16680 West Bernardo Drive
San Diego, CA 92127

The application shall be considered received when all the required documents and fees have been received by the office and the application number assigned.

The documents submitted for review and used for certification shall be retained by the DSA/ORS.

Authority: Government Code Section 4454.
Reference: Government Code Section 4454.

HISTORY:

1. Amendment filed 11-24-78; designated effective 1-1-79 (Register 78, No. 47). For prior history, see Register 76, No. 25.

2. Renumbering and amendment of former Section 83 to Section 83.1 filed 8-30-84; effective upon filing pursuant to Government Code Section 11346.2(d) (Register 84, No. 35).

3. Erratum to reflect locations of offices.

5-104. Fees.

(a) The filing fee for projects under applications received on or after September 1, 1984 shall be two-tenths of one percent (0.2%) of the first $500,000.00 of the estimated project cost plus one- tenth of one percent (0.1%) of the project cost greater than $500,000.00 up to and including $2,000,000.00 plus one-hundredth of one percent (0.01%) of the excess of the estimated project cost over $2,000,000.00, except that the minimum fee in any case shall be $200.00.

Example of filing fee to accompany application:

Estimated project cost = $250,000.00		
.002 × $250,000.00	=	$500.00
Estimated project cost = $1,500,000.00		
.002 × $500,000.00	=	$1,000.00
.001 × $1,000,000.00	=	1,000.00
		$2,000.00
Estimated project cost = $5,000,000.00		
.002 × $500,000.00	=	$1,000.00
.001 × $1,500,000.00	=	1,500.00
.0001 × $3,000,000.00	=	300.00
		$2,800.00

(b) The fee schedule in effect at the time of filing shall apply throughout the duration of such application.

(c) If the actual project cost exceeds the estimated cost by more than 5 percent, a further fee for such projects shall become due and shall be equal to the difference between the filing fee paid and the amount computed under the schedule above using

* The address as published is incorrect. Address should read 311 South Spring St., Suite 1301, Los Angeles, CA 90013. This will be submitted for correction in Rulemaking.

the actual cost of the project. The actual project cost shall be determined as directed in Section 5-105 and billed according to Section 5-107.

(d) If the applicant requests the cancellation or withdrawal of the application and return of the plans and specifications and filing fee, this shall be granted unless the review has begun. No portion of the filing fee can be returned after the review has started.

Authority: Government Code Section 4453.
Reference: Government Code Section 4454.

HISTORY:

1. New section filed 8-30-84; effective upon filing pursuant to Government Code Section 11346.2(d) (Register 84, No. 35).

2. (OSA/AC-A 1/89) Editorial transfer from CCR, Title 21 to Title 24 11-1-89.

3. (OSA/AC-A 2/89) Amend CCR, Title 24, Part 1, Sec. 5-104 (a) (b), effective 1-1-90. Approved by Building Standards Commission 10-30-89.

4. (OSA/AC EF 1/92) Emergency order by the Office of the State Architect/Access Compliance to amend Section 5-104 (a), Part 1, Title 24, California Code of Regulations. Filed as an emergency order with the secretary of state February 25, 1992;effectiveMarch 1, 1992.Approved as an emergency by the California Building Standards Commission on February 24, 1992.

5. (OSA/AC EF 1/92) Emergency order by the Office of the State Architect/Access Compliance to amend Section 5-104 (a), Part l, Title 24, California Code of Regulations; approved by the California Building Standards Commission on February 24, 1992; filed as an emergency order with the secretary of state February 25, 1992, and effective March 1, 1992, has lapsed. No action was taken by the OSA/AC to make these regulations permanent; therefore, the initial regulations are back in effect as of June 29, 1992.

5-105. Project Cost. For purposes of determining the fees, both the estimated and actual project cost shall be the cost for the total outlay contemplated for all work included in the certified plans and specifications. The term "project" shall be defined as all buildings and other structures, together with the development of the site, but in the event the plans and specifications submitted with the application do not provide for the construction of, addition or alteration to a building or structure, then it shall be for the site development proposed in the application.

The actual project cost shall include all items, which are normally considered to be contractors operation costs. Addenda or change order items which increase the contract amount shall be included in the final actual project cost computation.

All fees and/or reimbursable charges paid the construction managers shall be included in the actual project cost. When the contract for the work includes items not otherwise subject to the approval of the office and not included in the approved plans and specifications the actual cost shall include this work unless such costs are segregated by separate bid items or by separately priced items of change orders, or by a certified copy of the subcontractor's bid. Such segregation shall not be made by contract price breakdown or estimates.

Authority: Government Code Section 4454.
Reference: Government Code Section 4454.

HISTORY:

1. New section filed 8-30-84; effective upon filing pursuant to Government Code Section 11346.2 (d) (Register 84, No. 35).

5-106. Revision of Plans and Specifications. No additional fee is charged upon submission of revisions to the approved plans and specifications, provided that the entire matter is actually one transaction having to do with the same project and the revisions do not require substantial review for accessibility. If the original plans are abandoned and the plans and specifications submitted in lieu thereof are in fact for a new project rather than an identical project, or where a modified set of plans is for an essentially different concept, it is necessary that a new application be filed and a fee paid. This is regardless of the fact that the project may have the same name, be of the same general size, and be situated at the same location as the project for which the original application was made.

Authority: Government Code Section 4454.
Reference: Government Code Section 4454.

HISTORY:

1. New section filed 8-30-84; effective upon filing pursuant to Government Code Section 11346.2(d) (Register 84, No. 35).

5-107. Billing for Further Fees. For public school projects the DSA/ORS shall determine whether or not further fees are due and shall bill the district for such further fees.

For projects other than public schools, the applicant or owner shall submit to the office a report verifying the actual project cost within 90 days after the completion of the project. This actual project cost shall be the basis for the further fee computation. The accuracy and timely submission of this actual project cost report shall be the responsibility of the owner or his designated agent.

The owner shall be billed for further fees upon completion of the project or portion thereof if fee is due.

Authority: Government Code Section 4454.
Reference: Government Code Section 4454.

HISTORY:
1. New section filed 8-30-84; effective upon filing pursuant to Government Code Section 11346.2 (d) (Register 84, No. 35).

5-108. Refunds. Claims for refunds of five dollars or less due to errors in cost reporting or fee computation shall be made within one year from the date of payment.

Authority: Government Code Section 4454.
Reference: Government Code Section 4454.

HISTORY:
1. New section filed 8-30-84; effective upon filing pursuant to Government Code Section 11346.2(d) (Register 84, No. 35).

5-109. Review of Plans and Specifications. The DSA/ORS will review the submitted documents to ensure that the requirements cited in Article 1 are fully met.

Authority: Government Code Section 4453.
Reference: Government Code Section 4454.

HISTORY:
1. Amendment filed 11-24-78; designated effective 1-1-79 (Register 78, No. 47).

5-110. Written Approval.
(a) Approval Obtained. Upon completion of review, DSA/ORS will return to the awarding authority a written approval, if the documents comply with the requirements. This approval of the application constitutes the "written approval" required by Section 4454 of the Government Code. No changes or revisions shall be made following written approval, which affect handicapped compliance items unless such changes or revisions are submitted to the Access Compliance Section of the DSA/ORS for approval.

(b) Approval Denied. If the documents fail to meet the requirements of these regulations, DSA/ORS will return to the awarding authority the plans with corrections noted thereon together with instructions for resubmittal of the plans and specifications. The corrected plans are the property of the Division of the State Architect and shall be returned within six months or the application will be void. No valid construction contract may be awarded before written approval is obtained.

(c) Unauthorized Deviations. In the event that there is an unauthorized deviation from the requirements of these regulations with respect to the standards specified, the same shall be rectified by full compliance there with within ninety (90) days after discovery of such deviation.

(d) Notification. Where the State Architect is the enforcement authority and any project is proposed to be approved and such approval action would deny accessibility either required by Sections 4450 and 4458, inclusive, of the Government Code to handicapped persons, or by reason of an equivalent facilitation exception granted pursuant to Section 4451 of the Government Code, the State Architect shall notify affected handicapped persons or organizations and others who have made written requests to be informed as to such proposals under consideration.

Authority: Government Code Sections 4450 and 4453.
Reference: Government Code Sections 4451 (as interpreted by the California Superior Court, City and County of San Francisco, in California Association of the Physically Handicapped vs. Trustees of the California State University and Colleges, No. 692231, judgment entered 9-16-80) and 4454.

HISTORY:

1. Amendment filed 11-24-78; designated effective 1-1-79 (Register 78, No. 47).

2. New subsection (d) filed 3-6-81 as an emergency; effective upon filing (Register 81, No. 10). A Certificate of Compliance must be transmitted to OAL within 120 days or emergency language will be repealed on 7-4-81.
3. Order of Repeal of 3-6-81 emergency order filed 3-13-81 by OAL pursuant to Government Code Section 11349.6 (Register 81, No. 11).

4. New subsection (d) filed 7-28-82; effective thirtieth day (Register 82, No. 31).

5. Amendment of subsection (a) filed 7-17-85; effective thirtieth day thereafter (Register 85, No. 29).

5-111. General Requirements. General requirements and building standards are located in Title 24, Part 2.

Article 2. Division of the State Architect – Access Compliance
Processing Product Approvals
January 1, 2001

NOTE: Detectable warning products and directional surfaces installed after January 1, 2001 shall be evaluated by an independent entity, selected by the Department of General Services, Division of the State Architect, Access Compliance, for all occupancies, including transportation and other outdoor environments, except that when products and surfaces are for use in residential housing, evaluation shall be in consultation with the Department of Housing and Community Development. See Government Code Section 4460.

5-201. Processing Independent Entity Evaluation Approvals (IEEA). Independent Entity Evaluation Approvals shall be registered in the Division of the State Architect (DSA) headquarters office.

To maintain a central file for all IEEA and to operate within the current DSA program, certain administration and all accounting shall be performed at the DSA headquarters office under the direction of the Principal of Access Compliance.

5-202. IEAA Application Procedure.

1. Upon receipt of an IEEA application, send the application fee and a copy of the application to the DSA headquarters office, attention: Access Compliance.

2. A paper file will be created for each IEEA, which will initially include a copy of the application and the application fee. Headquarters personnel will then file the product, manufacturer and registration information, creating an IEEA number.

3. The application fee will be given to the headquarters cashier for deposit.

5-203. IEEA Acceptance Procedure.

1. Prior to issuing IEEA acceptance, it is required that all fees be paid. If fees are due, please contact the manufacturer for payment and forward the payment to the DSA headquarters office, along with the request for the additional payment.

2. The fee, if any, will be given to the headquarters, cashier for filing and deposit.

3. The acceptance letter will be retained at DSA head quarters, Access Compliance. A copy of the status approval letter will be returned to the applicant.

4. Headquarters' personnel will register, prepare and distribute all necessary copies of the acceptance letter. The original file shall be maintained at headquarters.

5-204. Accounting of IEEA. Income for IEEA will be earned in the month in which they are banked. This money will be applied to Disability Access Account for deposit.

5-205. Contacts for Questions.

1. IEEA Contact, SA headquarters, attention: Access Compliance, IEEA Program.

2. Headquarters Administration Contact, Principal Access Compliance.

3. Headquarters Accounting Contact, DSA headquarters, Accounting.

Authority: Government Code Sections 4450, 4460 and Health& Safety Code Section 18949.1.
Reference: Government Code Section 4460.

Article 3. Acceptance of Detectable Warning and Directional Surface Products for Manufacturers and Design Professionals January 01, 2001

NOTE: Detectable warning products and directional surfaces installed after January 1, 2001 shall be evaluated by an independent entity, selected by the Department of General Services, Division of the State Architect, Access Compliance, for all occupancies, including transportation and other outdoor environments, except that when products and surfaces are for use in residential housing, evaluation shall be in consultation with the Department of Housing and Community Development. See Government Code Section 4460.

5-301. Division of the State Architect, Access Compliance, Acceptance of Product. The procedure for the DSA/AC acceptance of manufactured products is detailed in this article.

All products require prior evaluation by a recognized evaluation agency that has a program specifically intended for such purposes. DSA/AC shall review the evaluation report for compliance with related and appropriate national standards and Title 24 requirements.

5-301.1. Product submittal. Products must meet the requirements of Section 5-301.

5-301.2. Division of the State Architect, Access Compliance, products exempt from evaluation by a recognized agency . No products can be approved for use that do not require evaluation by a recognized evaluation agency.

5-301.3. Products evaluated by recognized state and city agencies. No products can be approved by any state and city agencies for use that do not require evaluation by a recognized evaluation agency.

5-301.4. Products evaluated by a recognized evaluation agency. Products must have, as a minimum, an approved report published by a nationally recognized evaluation agency. Without an evaluation report, the applicant will be required to obtain such a report or will be denied acceptance on DSA/AC projects. The report and its evaluation criteria may be reviewed for compliance with national standards.

5-301.5. Development of DSA Acceptance Criteria. Development of new DSA/AC acceptance criteria shall be based on acceptance criteria from a recognized evaluation agency.

5-301.6. Marking. Each detectable warning and directional surface products shall be provided with:

1. Label indicating the DSA label number,

2. Manufacturer' s product number, and

3. Product approval expiration date.

Authority: Government Code Sections 4450 and 4460 and Health & Safety Code Section 18949.1.
Reference: Government Code Section 4460.

Article 4. Application for Independent Entity Evaluation Approval (IEEA)

5-401. Application for IEEA. The following form must be filed in duplicate**:**

APPLICATION FOR IEEA FORM
(Filed in Duplicate)

1. Product Name: _____

2. Description of Product: _____ Expiration Date: _____

3. Intended Product Use: _____

4. Company Name: _____

5. Company Address: _____

6. Contact Person: _____

Title: _____

Contact Person's Phone Number: _____

Contact Person's Fax Number: _____

7. Name of Applicant: _____

8. Signature of Applicant: _____ Date: _____

9. Application Fee Submitted: _____

Please make checks payable to Division of the State Architect, Access Compliance

New Submittal:	$1,500.00
Revised Submittal:	$ 500.00

Fees shown are for initial application. Additional time expended during product review in excess of the initial fee will be billed on an hourly basis.

10. Return application, check and submittal to:

Division of the State Architect – Access Compliance
1130 K Street, Suite 101
Sacramento, CA 95814

HISTORY NOTE APPENDIX FOR CHAPTER 5

Administrative Regulations for the Division of the State Architect, Access Compliance
(Title 24, Part 1, California Code of Regulations)

The format of the history notes has been changed to be consistent with the other parts of the California Building Standards Code. The history notes for prior changes remain within the text of this code.

1. (DSA/AC 2/01) Adoption of detectable warning products and standards, Chapter 5, Articles 2, 3 and 4. Approved by the California Building Standards Commission on November 28, 2001. Filed with the Secretary of State on March 1, 2002, effective April 2, 2002.

2001
California
Building
Code

California Code of Regulations
Title 24, Part 2

Based on 1997 Uniform Building Code

Effective
November 1, 2002

Chapter 1
ADMINISTRATION*

SECTION 101 – TITLE, PURPOSE AND SCOPE

101.1 Title. *For the State of California, these regulations shall be known as the California Building Code. The provisions contained in the California Building Code of the (compiled) California Building Standards Code as defined in Section 18910, Health and Safety Code, may be cited as such and are referred to hereafter as "these Regulations" or "these building standards" or "this code."*

101.2 Purpose. ***[For DSA/AC]*** *The purpose of this code is to ensure that barrier-free design is incorporated in all buildings, facilities, site work and other developments to which this code applies and to ensure that they are accessible to and usable by persons with disabilities.*

101.3 Scope.

101.3.1 *The provisions of the model codes which are adopted by these regulations are applicable to all occupancy groups and uses regulated by this code. The amendments to the model codes are applicable only to those occupancies or uses which the state agency adopting the amendments is authorized to regulate as listed in Section 101.17.*

> ***NOTE:*** *It is not the intent of this section that every existing occupancy within the scope of the state fire marshal's jurisdiction mandatorily conform or be made to conform to the new construction requirements relative to fire, panic and explosion safety. Reasonable judgment must be exercised by the enforcing agency in the application of these building standards to existing occupancies.*

[For DSA/AC] EXCEPTION: *Outdoor environments and uses shall be classified according to accessibility uses described in Chapters 11A, 11B and 11C, and life safety concerns.*

101.4 Effective Date.

101.4.1 *One hundred and eighty days after the date of publication, or as otherwise noted herein.*

> ***NOTE:*** *For clarification purposes, the applicable sections of the Health and Safety Codes are repeated here for clarity and read as follows:*

Section 18938. Application and Effective Date. *The building standards contained in the Uniform Fire Code, of the International Conference of Building Officials and the Western Fire Chiefs Association, Inc., the Uniform Building Code of the International Conference of Building Officials, Appendix Chapter 1 of the Uniform Code for Building Conservation of the International Conference of Building Officials, the Uniform Plumbing Code of the International Association of Plumbing and Mechanical Officials, the National Electrical Code of the National Fire Protection Association, the Uniform Mechanical Code of the International Association of Plumbing and Mechanical Officials, as referenced in the California Building Standards Code, shall apply to all occupancies throughout the state and shall become effective 180 days after publication in the California Buildings Standards Code by the California Building Standards Commission, or at a later date after publication established by the commission.*

101.5 Format. *This part fundamentally adopts the UBC by reference on a chapter-by-chapter basis. Such adoption is reflected in the adoption table of each chapter of this part. When the adoption table of a chapter of this part makes no reference to a specific chapter of the UBC, such chapter of the UBC is not adopted as a portion of this code.*

101.6 Validity. *If any chapter section, subsection, sentence, clause or phrase of this code is for any reason held to be unconstitutional, contrary to statute, exceeding the authority of the state as stipulated by statutes, or otherwise inoperative, such decision shall not affect the validity of the remaining portion of this code.*

---

* For DSA/AC to carry out its statutory responsibilities, DSA/AC historically adopts only those sections indicated as CA amendments. This limited scope will be submitted for correction in Rulemaking.

101.7 Standard Reference Documents. *The codes, standards and publications adopted and set forth in this code, including other codes, standards and publications referred to therein are, by title and date of publication, hereby adopted as standard reference documents of this code.*
When this code does not specifically cover any subject relating to building design and construction, recognized fire-prevention engineering practices shall be employed. The National Fire Codes and the Fire Protection Handbook of the National Fire Protection Association may be used as authoritative guides in determining recognized fire-prevention engineering practices.

101.8 Nonbuilding Regulations. *Requirements contained in the UBC, or in any other referenced standard, code or document, which are not building standards as defined in Section 18909, Health and Safety Code, shall not be construed as part of the provisions of this code.*

For the applicability of regulations relating to maintenance, operation, use, limitations or prohibitions, and similar nonbuilding regulations, see other titles of the California Code of Regulations.

101.9 Order of Precedence.

101.9.1 General. *In the event of any differences between these building standards and the standard reference documents, the text of these building standards shall govern. Where a specific provision varies from a general provision, the specific provision shall apply.*

101.9.2 Fire Codes. *Nothing in these building standards shall diminish the requirements of the state fire marshal.*

101.16 Availability of Code. *For clarification purposes, the applicable section of the Health and Safety Code is repeated here for clarity and reads as follows:*

Section 18942.
(d) (1) *Each city, county, and city and county, including charter cities, shall obtain and maintain with all revisions on a current basis, at least one copy of the building standards and other state regulations relating to buildings published in Title 8, 19, 20, 24 and 25 of the California Code of Regulations. These codes shall be maintained in the office of the building official responsible for the administration and enforcement of this part.*

(2) *This subdivision shall not apply to any city or county which contracts for the administration and enforcement of the provisions of this part with another local government agency that complies with this section.*

101.17 Application.
Vesting Authority. *When adopted by a state agency, the provisions of this code shall be enforced by the appropriate enforcing agency, but only to the extent of authority granted to such agency by the State Legislature.*

Following is a list of the state agencies that adopt building standards, the specific scope of application of the agency responsible for enforcement, and the specific statutory authority of each agency to adopt and enforce such provisions of building standards of this code, unless otherwise stated.

101.17.11 DSA/AC. Access Compliance, Division of the State Architect.
General. *To assure that barrier-free design is incorporated in all buildings, facilities, site work and other improvements to which this code applies in compliance with state law to assure that these improvements are accessible to and usable by persons with disabilities. Additions, alterations and structural repairs in all buildings and facilities shall comply with these provisions for new buildings, except as otherwise provided and specified herein.*

The provisions of these regulations shall apply to any portable buildings leased or owned by a school district, and shall also apply to temporary and emergency buildings and facilities.

In addition, to incorporate standards at least as restrictive as those required by the federal government for barrier-free design under (1) Title III (Public Accommodations and Commercial Facilities), Subpart D (New Construction and Alteration) and Appendix A (Americans with Disabilities Act Accessibility Guidelines) (see 28 C.F.R., Part 36), and (2) Title II (Public Entities), Section 35.151 (New Construction and Alterations) (see 28 C.F.R., Part 35) both from the Americans with

Disabilities Act of 1990, and (3) under the Fair Housing Amendments of 1988. Some of these regulations may be more stringent than state law in order to meet the federal requirement.

***1. Application**. Publicly funded buildings, structures, sidewalks, curbs and related facilities shall be accessible to and usable by persons with disabilities as follows:*

***NOTE:** See Government Code commencing with Section 4450.*

***1.1** All buildings, structures, sidewalks, curbs and related facilities constructed in the state by the use of state, county or municipal funds, or the funds of any political subdivision of the state.*

***1.2** All buildings, structures and facilities that are leased, rented, contracted, sublet or hired by any municipal county, or state division of government, or by a special district.*

***1.3** All publicly funded buildings used for congregate residences or for one- or two-family dwelling unit purposes shall conform to the provisions applicable to living accommodations.*

***1.4** All existing publicly funded buildings and facilities when alterations, structural repairs or additions are made to such buildings or facilities. For detailed requirements on existing buildings, see Chapter 11B, Division IV.*

***1.5** With respect to buildings, structures, sidewalks, curbs and related facilities not requiring a building permit, building standards published in the California Building Standards Code relating to access for persons with disabilities and other regulations adopted pursuant to Government Code Section 4450, and in effect at the time construction is commenced, shall be applicable.*

***2. Application.** All privately funded public accommodations, as defined, and commercial facilities, as defined, shall be accessible to persons with physical disabilities as follows:*

***NOTE:** See Health and Safety Code commencing with Section 19952.:*

***EXCEPTION:** Certain types of privately funded multistory buildings do not require installation of an elevator to provide access above and below the first floor. See Chapter 11B.*

***NOTE:** Exceptions for multistoried buildings formerly located in this section have been moved to Chapter 11B.*

***2.1** Any building, structure, facility, complex, or improved area, or portions thereof, which are used by the general public.*

***2.2** Any sanitary facilities which are made available for the public, clients or employees in such accommodations or facilities.*

***2.3** Any curb or sidewalk intended for public use that is constructed in this state with private funds.*

***2.4** All existing privately funded public accommodations when alterations, structural repairs or additions are made to such public accommodations as set forth under Chapter 11B.*

3. Application. Public Housing and Private Housing Available for Public Use.

***NOTE:** See Government Code Sections 4450 and 12955.1 (d).*

4. Enforcing Agency.

***4.1** The director of General Services where state funds are utilized for any project or where funds of counties, municipalities or other political subdivisions are utilized for the construction of elementary, secondary or community college projects.*

***4.2** The governing bodies where funds of counties, municipalities or other political subdivisions are utilized except as otherwise provided above.*

4.3 *The building department of every city, county, or city and county within the territorial area of its city, county, or city and county, where private funds are utilized. "Building department" means the department, bureau or officer charged with the enforcement of laws or ordinances regulating the erection or construction, or both the erection and construction, of buildings.*

5. Special Conditions for Persons with Disabilities Requiring Appeals Action Ratification. *Whenever reference is made in these regulations to this section, the findings and determinations required to be rendered by the local enforcing agency shall be subject to ratification through an appeals process.*

6. Authority Cited *Government Code Section 4450.*

7. Reference *Government Code Sections 4450 through 4460, 12955.1(d) and Health and Safety Code Sections 18949.1, 19952 through 19959.*

Chapter 2
DEFINITIONS AND ABBREVIATIONS

SECTION 201 – DEFINITIONS

SECTION 202 – A

ACCESSIBLE. [For HCD 1/AC] *See Chapter 11A, Section 1102A.1-A.*
[For DSA/AC] *See Chapter 11A, Section 1102A.1-A and Chapter 11B, Section 1102B.*

ACCESSIBILITY. [For HCD 1/AC] *See Chapter 11A, Section 1102A.1-A.*
[For DSA/AC] *See Chapter 11A, Section 1102A.1-A and Chapter 11B, Section 1102B.*

[For DSA/AC] ACCESSIBLE ELEMENT *is an element specified by the regulations adopted by the Division of the State Architect/Access Compliance.*

[For DSA/AC] ACCESSIBLE LOCATION *is a location, which can be reached by an employee standing on the floor, platform, runway or other permanent working area.*

ACCESSIBLE ROUTE OF TRAVEL. [For HCD 1/AC] *See Chapter 11A, Section 1102A.1-A.* ***[For DSA/AC]*** *See Chapter 11A, Section 1102A.1-A and Chapter 11B, Section 1102B.*

[For DSA/AC] ACCESSIBLE SPACE *is a space that complies with the regulations adopted by the Division of the State Architect/Access Compliance.*

[For DSA/AC & HCD 1/AC] ADAPTABLE DWELLING UNIT. *See Chapter 11A, Section 1102A.1-A.*

ADDITION is an extension or increase in floor area or height of a building or structure.

[For DSA/AC] AISLE *is a circulation path between objects such as seats, tables, merchandise, equipment, displays, shelves, desks, etc.*

[For DSA/AC] AISLE, EMPLOYEE AREAS, *(as required for architectural accessibility) is a space that serves as a passage-way, which is created by architectural components such as walls, fixed cabinetry or fixtures and not moveable components such as furniture.*

ALLEY is any public way or thoroughfare less than 16 feet (4877 mm) but not less than 10 feet (3048 mm) in width that has been dedicated or deeded to the public for public use.

[For DSA/AC] **ALTER** or **ALTERATION** is any change, addition or modification in construction or occupancy *or structural repair or change in primary function to an existing structure other than repair or addition.*

ANSI is the American National Standards Institute, 1430 Broadway, New York, New York 10018.

APARTMENT HOUSE is any building or portion thereof that contains three or more dwelling units and, for the purpose of this code, includes residential condominiums.

APPROVED. [*For HCD 1 & HCD 2, DSA/AC]* *Approved means meeting the approval of the enforcement agency, except as otherwise provided by law, when used in connection with any system, material, type of construction, fixture or appliance as the result of investigations and tests conducted by the agency, or by reason of accepted principles or tests by national authorities, technical, health, or scientific organizations or agencies.*

NOTES:
1. *See Health and Safety Code Section 17920 for" approved" as applied to residential construction and buildings or structures accessory thereto, as referenced in Section 101.17.9.*

2. *See Health and Safety Code Section 17921.1 for "approved" as applied to the use of hotplates in residential construction referenced in Section 101.17.9.*

3. *See Health and Safety Code Section 17921.3 for "approved" as applied to low-flush water closets in residential construction, as referenced in Section 101.17.9.*

4. *See Health and Safety Code Section 19966 for "approved" as applied to factory-built housing as referenced in Section 101.17.9.*

[For DSA/AC, HCD 1 & HCD 2] APPROVED TESTING AGENCY *is any agency, which is determined by enforcement agency, except as otherwise provided by statute, to have adequate personnel and expertise to carry out the testing of systems, materials, type of construction fixtures or appliances.*

ASSEMBLY BUILDING is a building or portion of a building used for the gathering together of 50 or more persons for such purposes as deliberation, education, instruction, worship, entertainment, amusement, drinking or dining, or awaiting transportation. ***[For DSA/AC, SFM]*** *Any building or structure or portion thereof used or intended to be used for the showing of motion pictures when an admission fee is charged and when such building or structure is open to the public and has a capacity of 10 or more persons.*

[For DSA/AC & HCD 1/AC] ASSISTIVE DEVICE. *See Chapter 11A, Section 1102A.1-A.*

AUTOMATIC DOOR. [For HCD 1/AC] *See Chapter 11A, Section 1102A.1-A.*

[For DSA/AC] *See Chapter 11A, Section 1102A.1-A and Chapter 11B, Section 1102B.*

SECTION 203 – B

[For DSA/AC, HCD 1/AC] BATHROOM. *See Chapter 11A, Section 1102A.2-B.*

[For DSA/AC, HCD 1 & HCD 2, SFM] **BUILDING** is any structure *as to which state agencies have regulatory power,* used or intended for supporting or sheltering any use or occupancy, *housing or enclosure of persons, animals, chattels, equipment or property of any kind, and also includes structures wherein things may be grown, made, produced, kept, handled, stored or disposed of, and all appendages, accessories, apparatus, appliances and equipment installed as a part thereof.*

"Building" shall not include machinery, equipment or appliances installed for manufacture or process purposes only, nor shall it include any construction installations which are not a part of a building, any tunnel, mine shaft, highway or bridge, or include any house trailer or vehicle which conforms to the Vehicle Code.

NOTE: *BUILDING shall have the same meaning as defined in Health and Safety Code Section 17920 and 18908 for the applications specified in Sections 101.17.9 and 101.17.10.*

[For HCD 1/AC, DSA/AC] BUILDING ENTRANCE ON AN ACCESSIBLE ROUTE. *See Chapter 11A, Section 1102A.2-B.*

[For HCD 1 & HCD 2, DSA/AC] **BUILDING, EXISTING,** is a building erected prior to the adoption of this code, or one for which a legal building permit has been issued.

[For DSA/AC, HCD 1 & HCD 2] **BUILDING OFFICIAL** is the officer or other designated authority charged with the administration and enforcement of this code, or the building officials duly authorized representative *[for SFM] in accordance with state law, Health and Safety Code Section 13146, in occupancies regulated by the State Fire Marshal.*

SECTION 204 – C

[For HCD 1 & HCD 2, DSA/AC, SFM, DSA/SS] C.C.R. *means the California Code of Regulations.*

[For DSA/AC] CIRCULATION PATH *is an exterior or interior way of passage from one place to another for pedestrians, including, but not limited to, walks, hallways, courtyards, stairways and stair landings.*

[For DSA/AC] CLOSED-CIRCUIT TELEPHONE *is a telephone with dedicated line(s) such as a house phone, courtesy phone or phone that must be used to gain entrance to a facility.*

[For HCD 2, DSA/AC] COMMERCE *is travel, trade, traffic, commerce, transportation, or communication (1) within the state; (2) among several states; (3) between any foreign country or any territory or possession and any state; or (4) between points in the same state, but through another state or foreign country.*

[For HCD 2, DSA/AC] COMMERCIAL FACILITIES *are facilities that are intended for nonresidential use and whose operations will affect commerce, including factories, warehouses, office buildings, and other buildings in which employment may occur. Commercial facilities shall not include railroad locomotives, railroad freight cars, railroad cabooses, railroad cars covered under Title III of the Americans with Disabilities Act of 1990, or facilities that are covered or expressly exempted from coverage under the Fair Housing Amendment Act of 1988 (42 USC 3601-3631, et seq.).*

COMMON USE AREAS. [For HCD 1/AC] *See Chapter 11A, Section 1102A.3-C.* ***[For DSA/AC]*** *See Chapter 11A, Section 1102A.3-C and Chapter 11B, Section 1102B.*

CONDOMINIUM, RESIDENTIAL. See apartment house.

CONGREGATE RESIDENCE is any building or portion thereof that contains facilities for living, sleeping and sanitation, as required by this code, and may include facilities for eating and cooking, for occupancy by other than a family. A congregate residence may be a shelter, convent, monastery, dormitory, fraternity or sorority house, but does not include jails, hospitals, nursing homes, hotels or lodging houses.

[For DSA/AC & HCD 1/AC] COVERED MULTIFAMILY DWELLINGS. *See Chapter 11A, Section 1102A.3-C.*

[For DSA/AC & HCD 1/AC] CROSS SLOPE. *See Chapter 11A, Section 1102A.3-C and Chapter 11B, Section 1102B.*

[For HCD 1/AC, DSA/AC] CURB CUT. *See Chapter 11A, Section 1102A.3-C and Chapter 11B, Section 1102B.*

CURB RAMP. [For HCD 1/AC] *See Chapter 11A, Section 1102A.3-C.* ***[For DSA/AC]*** *See Chapter 11A, Section 1102A.3-C and Chapter 11B, Section 1102B.*

SECTION 205 – D

DETECTABLE WARNING. [For HCD 1/AC] *See Chapter 11A, Section 1102A.4-D.* ***[For DSA/AC]*** *See Chapter 11A, Section 1102A.4-D and Chapter 11B, Section 1102B.*

[For DSA/AC] DISABILITY *is (1) a physical or mental impairment that substantially limits one or more of the major life activities of an individual, or (2) a record of such an impairment, or (3) being regarded as having such an impairment.*

[For DSA/AC] DISABLED. *See "disability."*

[For HCD1 & HCD2, DSA/AC] DIRECTIONAL SIGN *is a sign publicly displayed notice which indicates by use of words or symbols a recommended direction or route of travel.*

[For DSA/AC] DORMITORY *is a room occupied by more than two guests.*

DWELLING UNIT is any building or portion thereof that contains living facilities, including provisions for sleeping, eating, cooking and sanitation, as required by this code, for not more than one family, or a congregate residence for 10 or less persons. ***[For HCD 1/AC]*** *See Chapter 11A, Section 1102A.4-D.* ***[For DSA/AC]*** *See Chapter 11A, Section 1102A.4-D and Chapter 11B, Section 1102B.*

SECTION 206 – E

[For DSA/AC] ELEVATOR, PASSENGER. *See Chapter 11B, Section 1102B.*

[For HCD 1 & HCD 2, DSA/AC] ENFORCING AGENCY *is the designated department or agency as specified by statute or regulation.*

[For DSA/AC] ENTRANCE *shall mean any entrance to a facility, which has a substantial flow of pedestrian traffic to any specific major function of the facility.*

EQUIVALENT FACILITATION. [For HCD 1/AC] *See Chapter 11A, Section 1102A.5-E.* ***[For DSA/AC]*** *See Chapter 11A, Section 1102A.5-E and Chapter 11B, Section 1102B.*

EXISTING BUILDINGS. See "building, existing."

EXIT. See Section 1005.1.

SECTION 207 – F

FACILITY (or FACILITIES). [For HCD 1/AC] *See Chapter 11A, Section 1102A.6-F.* ***[For DSA/AC]*** *See Chapter 11A, Section 1102A.6-F and Chapter 11B, Section 1102B.*

SECTION 208 – G

GRAB BAR *is a bar for the purpose of being grasped by the hand for support.* ***[For HCD 1 & HCD 2]*** *See Chapter 11A, Section 1102A.7-G.* ***[For DSA/AC]*** *See Chapter 11A, Section 1102A.7-G and Chapter 11B, Section 1102B.*

[For HCD 1 & HCD 2, DSA/AC] **GRADE (Adjacent Ground Elevation)** is the lowest point of elevation of the finished surface of the ground, paving or sidewalk within the area between the building and the property line or, when the property line is more than 5 feet (1524 mm) from the building, between the building and a line 5 feet (1524mm) from the building. *See Health and Safety Code Section 19955.3 (d).*

[For DSA/AC, HCD 1/AC] GROUND FLOOR. *See Chapter 11A, Section 1102A.7-G.*

[For HCD 1 & HCD 2, DSA/AC] GUARDRAIL *is a vertical barrier erected along the open edges of a floor opening, wall opening, ramp, platform, runway or other elevated area to prevent persons from falling off the open edge.*

SECTION 209 – H

HANDRAIL is a railing provided for grasping with the hand for support. See also "guardrail". ***[For HCD 1/AC]*** *See Chapter 11A, Section 1102A.8-H.* ***[For DSA/AC]*** *See Chapter 11A, Section 1102A.8-H and Chapter 11B, Section 1102B.*

[For DSA/AC] HEALTH CARE PROVIDER *is a person or entity regulated by a state to provide professional services related to the physical or mental health of an individual and who makes such services available to the public.*

[For DSA/AC] HISTORICAL BUILDING. *See "qualified historical building or property, Chapter 34, Division II, Section 8-218-Q."*
[For HCD 1, HCD 2, DSA/AC] **HOTEL *OR MOTEL*** is any building containing six or more guest rooms intended or

designed to be used, or *which* are used, rented or hired out to be occupied, or *which* are occupied for sleeping purposes by guests.

SECTION 210 – I

***INDEPENDENT ENTITY** is a not-for-profit product safety testing and certification organization, dedicated to testing for public safety. An independent entity would operate for the testing, certification and quality assessment of products, systems and services.*

***INTERNATIONAL SYMBOL OF ACCESSIBILITY. [For HCD 1/AC]** See Chapter 11A, Section 1102A.9-I. **[For DSA/AC]** See Chapter 11A, Section 1102A.9-I and Chapter 11B, Section 1102B.*

SECTION 211 – J

No definitions.

SECTION 212 – K

***KICK PLATE. [For HCD 1/AC]** See Chapter 11A, Section 1102A.11-K. **[For DSA/AC]** See Chapter 11A, Section 1102A.11-K and Chapter 11B, Section 1102B.*

SECTION 213 – L

***LEVEL AREA. [For HCD 1/AC]** See Chapter 11A, Section 1102A.12-L. **[For DSA/AC]** See Chapter 11A, Section 1102A.12-L and Chapter 11B, Section 1102B.*

***LIFT, SPECIAL ACCESS. [For HCD 1/AC]** See Chapter 11A, Section 1102A.12-L. **[For DSA/AC]** See Chapter 11A, Section 1102A.12-L and Chapter 11B, Section 1102B.*

***[For HCD 1, DSA/AC] LIVING ACCOMMODATIONS** means any building or portion thereof having three or more apartments as defined in this code or any publicly funded building or portion thereof.*

SECTION 214 – M

***MARKED CROSSING. [For HCD 1/AC]** See Chapter 11A, Section 1102A.13-M. **[For DSA/AC]** See Chapter 11A, Section 1102A.13-M and Chapter 11B, Section 1102B.*

[For HCD 1, DSA/AC] **MOTEL** shall mean *the same as* hotel as defined in this code.

***[For HCD 1/AC, DSA/AC] MULTISTORY DWELLING UNIT.** See Chapter 11A, Section 1102A.13-M.*

***[For HCD 1 & HCD 2, DSA/AC] MULTIPLE-ACCOMMODATION TOILET FACILITY** is a room that has more than one sanitary fixture, is intended for the use of more than one person at a time, and which usually is provided with privacy compartments or screens shielding some fixtures from view. A bathroom serving a hotel guest room and a privacy toilet in small offices, stores and similar locations are not included in this category.*

---

* The DSA/AC adoption indicator for the definition of Independent Entity was erroneously left out of the publication of the 2001 edition of the California Building Code. This will be submitted for correction in Rulemaking by adding DSA/AC adoption indicator.

SECTION 215 – N

[For HCD 1/AC] NEWLY CONSTRUCTED. *See Chapter 11A, Section 1102A.14-N.* ***[For DSA/AC]*** *See Chapter 11A, Section 1102A.14-N and Chapter 11B, Section 1102B.*

NOSE, NOSING. [For HCD 1/AC] *See Chapter 11A, Section 1102A.14-N.* ***[For DSA/AC]*** *See Chapter 11A, Section 1102A.14-N and Chapter 11B, Section 1102B.*

SECTION 216 – O

[For HCD 2, DSA/AC] OCCUPIABLE *is a room or enclosed space designed for human occupancy in which individuals congregate for amusement, educational or similar purposes, or in which occupants are engaged at labor, and which is equipped with means of egress, light and ventilation.*

OPEN RISER. [For HCD 1/AC] *See Chapter 11A, Section 1102A.15-O.* ***[For DSA/AC]*** *See Chapter 11A, Section 1102A.15-O and Chapter 11B, Section 1102B.*

[For DSA/AC] OPERABLE PART *is a part of a piece of equipment or appliance used to insert or withdraw objects, or to activate, deactivate or adjust the equipment or appliance (for example, coin slot, pushbutton, handle).*

SECTION 217 – P

PASSAGE DOOR. [For DSA/AC] *See Chapter 11A, Section 1102A.16-P and Chapter 11B, Section 1102B.*

[For HCD 1 & HCD 2] PASSENGER ELEVATOR *is an elevator used primarily to carry persons. See definition of elevator, in CCR, Title 24, Part 7, Article 7-6, Section 3009.* ***[For DSA/AC]*** *See Elevator, Passenger in Chapter 11B, Section 1102B.*

[For DSA/AC] PATH OF TRAVEL *is a passage that may consist of walks and sidewalks, curb ramps and pedestrian ramps, lobbies and corridors, elevators, other improved areas, or a necessary combination thereof, that provides free and unobstructed access to and egress from a particular area or location for pedestrians and/or wheelchair users.*

PEDESTRIAN. [For HCD 1/AC] *See Chapter 11A, Section 1102A.16-P.* ***[For DSA/AC]*** *See Chapter 11A, Section 1102A.16-P and Chapter 11B, Section 1102B.*

[For DSA/AC] PEDESTRIAN GRADE SEPARATION *is a structure erected over or under an obstacle such as a freeway, roadway, street, railroad, stream, etc., and intended primarily for pedestrian use.*

PEDESTRIAN RAMP. [For HCD 1/AC] *See Chapter 11A, Section 1102A.16-P.* ***[For DSA/AC]*** *See Chapter 11A, Section 1102A.16-P and Chapter 11B, Section 1102B.*

PEDESTRIAN WALKWAY is a walkway used exclusively as a pedestrian trafficway.

PEDESTRIAN WAY. [For HCD 1/AC] *See Chapter 11A, Section 1102A.16-P.* ***[For DSA/AC]*** *See Chapter 11A, Section 1102A.16-P and Chapter 11B, Section 1102B.*

[For DSA/AC] PERMANENT *shall mean facilities, which, are intended to be used for periods longer than those designated in this code under the definition of" temporary."*

PERMIT is an official document or certificate issued by the building official authorizing performance of a specified activity.

[For HCD 1/AC, DSA/AC] PERSON WITH DISABILITY. *See Chapter 11A, Section 1102A.16-P.*

[For HCD 1/AC, DSA/AC] PERSONS WITH PHYSICAL DISABILITIES. *See Chapter 11A, Section 1102A.16-P.*

[For DSA/AC] PLATFORM, UNENCLOSED, *is a horizontal, generally level and raised surface for speakers, performances, displays, etc., as distinguished from platform, which are enclosed.*

[For HCD 1/AC, DSA/AC] POWDER ROOM. *See Chapter 11A, Section 1102A.16-P.*

[For HCD 1 & HCD 2, DSA/AC] POWER-ASSISTED DOOR *is a door used for human passage with a mechanism that helps to open the door, or relieves the opening resistance of a door, upon the activation of a switch or a continued force applied to the door itself.*

[For HCD 1 & HCD 2, DSA/AC] PUBLIC ACCOMMODATION *includes, but is not limited to, any building or facility or other specific public use facilities not listed in Items 1 through 12 if they fall into one or more of the following categories:*

1. *Places of public lodging.*
2. *Establishments serving food or drink open to public use.*
3. *Places of exhibition or entertainment open to public use.*
4. *Places of public gathering.*
5. *Sales or rental establishments open to public use.*
6. *Service establishments open to public use.*
7. *Stations used for public transportation.*
8. *Places of public display or collection.*
9. *Places of public recreation.*
10. *Places of public education.*
11. *Social service center establishments open to public use.*
12. *Places of exercise or recreation open to public use.*

Examples of public accommodations for purposes of this code shall include, but not be limited to, the following private entities:

1. *An inn, hotel, motel or other place of public lodging, except for a lodging house located within a building that contains not more than five rooms for rent or hire.*
2. *A restaurant, bar, or other establishment serving food or drink.*
3. *A motion picture house, theater, concert hall, stadium or other place of exhibition or entertainment.*
4. *An auditorium, convention center, lecture hall, or other place of public gathering.*
5. *A bakery, grocery store, clothing store, hardware store, shopping center, or other sales or retail establishment.*
6. *A laundromat, dry cleaner, bank, barber shop, beauty shop, travel service, shoe repair service, funeral parlor, gas station, office of an accountant or lawyer, pharmacy, insurance office, professional office of a health care provider, hospital or other service establishment.*
7. *A terminal, depot, or other station used for specified public transportation.*
8. *A museum, library, gallery, or other place of public display or collection.*
9. *A park, zoo, amusement park, or other place of recreation.*

10. A nursery, elementary, secondary, undergraduate, or postgraduate private school, or other place of education.

11. A day-care center, senior citizen center, homeless shelter, food bank, adoption agency or other social service center establishment.

12. A gymnasium, health spa, bowling alley, golf course, or other place of exercise.

13. A church.

14. An office building.

15. A public curb or sidewalk.

***EXCEPTION:** See Chapter 11A, Section 1102A.16-P.*

***[For HCD 1 & HCD 2 & DSA/AC] PUBLICLY FUNDED.** For the purpose of housing, all buildings, structures, sidewalks, curbs and related facilities constructed in the state and used or intended to be used as a public use area, as defined in Section 1102A.16-P, shall comply with the accessibility standards of Chapter 11B of this code when state, county or municipal funds, or funds of any political subdivision of the state are used.*

***PUBLIC USE AREA. [For HCD 1/AC]** See Chapter 11A, Section 1102A.16-P. **[For DSA/AC]** See Chapter 11A, Section 1102A.16-P and Chapter 11B, Section 1102B.*

SECTION 218 – Q

***[For DSA/AC] QUALIFIED HISTORICAL BUILDING (OR STRUCTURE).** See Chapter 34, Division II, Section 8-218-Q.*

SECTION 219 – R

***[For DSA/AC] RAIL TRANSIT BOARDING PLATFORM** is a horizontal, generally level surface, whether raised above, recessed below, or level with a transit rail, from which, persons embark/disembark a fixed rail vehicle.*

***[For HCD 1/AC, DSA/AC] RAMP.** See Chapter 11A, Section 1102A.18-R.*

***[For HCD 2, DSA/AC] REASONABLE PORTION** shall mean that segment of a building, facility, area, space or condition, which would normally be necessary if the activity therein is to be accessible by persons with disabilities.*

***[For HCD 1 & HCD 2, DSA/AC] RECOMMEND** does not require mandatory acceptance, but identifies a suggested action that shall be considered for the purpose of providing a greater degree of accessibility to persons with disabilities.*

***[For HCD 1 & HCD 2, DSA/AC, SFM] REMODELING.** See "alter or alteration".*

REPAIR is the reconstruction or renewal of any part of an existing building for the purpose of its maintenance.

***RISER. [For HCD 1/AC]** See Chapter 11A, Section 1102A.18-R. **[For DSA/AC]** See Chapter 11A, Section 1102A.18-R and Chapter 11B, Section 1102B.*

***[For DSA/AC] RUNNING SLOPE** is the slope that is parallel to the direction of travel.*

SECTION 220 – S

---

* The Exception is shown in error. No definition for Public Accommodation is found in 1120A.16-P. This will be submitted for correction in Rulemaking by deleting the Exception.

[For HCD 1 & HCD 2, DSA/AC] SANITARY FACILITY *is any single water closet, urinal, lavatory, bathtub or shower, or a combination thereof, together with the room or space in which they are housed.*

[For HCD 2, DSA/AC] SHOPPING CENTER *is one or more sales establishments or stores.*

[For HCD 1 & HCD 2, DSA/AC] SHOULD. *See "Recommend."*

[For DSA/AC] SIDEWALK *is a surfaced pedestrian way contiguous to a street used by the public. See definition for "walk."*

[For DSA/AC] SIGNAGE *is displayed verbal, symbolic, tactile, and/or pictorial information.*

[For HCD 1 & HCD 2, DSA/AC] SINGLE-ACCOMMODATION SANITARY FACILITY *is a room that has not more than one of each type of sanitary fixture, is intended for use by only one person at a time, has no partition around the toilet, and has a door that can be locked on the inside by the room occupant.*

[For HCD 1 & HCD 2, DSA/AC] SITE *is a parcel of land bounded by a property line or a designated portion of a public right of way.*

[For HCD 1 & HCD 2, DSA/AC] SITE DEVELOPMENT *is "on-site" and "off-site" work, including, but not limited to, walks, sidewalks, ramps, curbs, curb ramps, parking facilities, stairs, planting areas, pools, promenades, exterior gathering or assembly areas and raised or depressed paved areas.*

SLEEPING ACCOMMODATIONS. [For HCD 1/AC] *See Chapter 11A, Section 1102A.19-S.* ***[For DSA/AC]*** *See Chapter 11A, Section 1102A.19-8 and Chapter 11B, Section 1102B.*

[For HCD 1/AC, DSA/AC] SLOPE. *See Chapter 11A, Section 1102A.19-S.*

[For HCD 2, DSA/AC] SPACE *is a definable area, eg., room, toilet room, hall, assembly area, entrance, storage room, alcove, courtyard, or lobby.*

SPECIAL ACCESS LIFT. [For HCD 1/AC] *See Chapter 11A, Section 1102A.19-S.* ***[For DSA/AC]*** *See Chapter 11A, Section 1102A.19-S and Chapter 11B, Section 1102B.*

STAGE. [See Chapter 4*.]

[For HCD 1/AC, DSA/AC] STAIR RAILING. *See Chapter 11A, Section 1102A.19-S.*

[For HCD 1 & HCD 2, DSA/AC, SFM] STAIRWAY. *Two or more risers shall constitute a stairway.*

STORY is that portion of a building included between the upper surface of any floor and the upper surface of the floor next above, except that the topmost story shall be that portion of a building included between the upper surface of the topmost floor and the ceiling or roof above. If the finished floor level directly above a usable or unused under-floor space is more than 6 feet (1829 mm) above grade, as defined herein, for more than 50 percent of the total perimeter or is more than 12 feet (3658 mm) above grade, as defined herein, at any point, such usable or unused under-floor space shall be considered as a story.

STRUCTURE is that which is built or constructed, an edifice or building of any kind, or any piece of work artificially built up or composed of parts joined together in some definite manner.

---

* The cross-reference to the definition for STAGE is not complete. The definition of STAGE is actually in Chapter 4, Section 405.1.2. This will submitted for correction in Rulemaking to read STAGE. [See Chapter 4, [for DSA/AC] Section 405.1.2].

SECTION 221 – T

[For HCD 2, DSA/AC] TACTILE *describes an object that can be perceived using the sense of touch.*

[For HCD 2, DSA/AC] TECHNICALLY INFEASIBLE *means, with respect to an alteration of a building or a facility, that it has little likelihood of being accomplished because existing structural conditions would require removing or altering a load-bearing member which is an essential part of the structural frame; or because other existing physical or site constraints prohibit modification or addition of elements, spaces, or features which are in full and strict compliance with the minimum requirements for new construction and which are necessary to provide accessibility.*
[For DSA/AC] TEMPORARY *shall mean buildings and facilities intended for use at one location for not more than one year and seats intended for use at one location for not more than 90 days.*

[For DSA/AC] TEXT TELEPHONE *is machinery or equipment that employs interactive graphic (i.e., typed) communications through the transmission of coded signals across the standard telephone network. Text telephones can include, for example, devices known as TTYs (telecommunication display devices) or computers.*

[For HCD 1/AC, DSA/AC] TOEBOARD. *See Chapter 11A, Section 1102A.20-T.*

[For HCD 1/AC, DSA/AC] TOWNHOUSE. *See Chapter 11A, Section 1102A.20-T.*

[For DSA/AC] TRANSIENT LODGING *is a building, facility, or portion thereof, excluding inpatient medical care facilities, that contains one or more dwelling units or sleeping accommodations. Transient lodging may include, but is not limited to, resorts, group homes, hotels, motels and dormitories.*

TREAD. [For HCD 1/AC] *See Chapter 11A, Section 1102A.20-T.* ***[For DSA/AC]*** *See Chapter 11A, Section 1102A.20-T and Chapter 11B, Section 1102B.*

TREAD DEPTH. [For HCD1/AC] *See Chapter 11A, Section 1102A.20-T.* ***[For DSA/AC]*** *See Chapter 11A, Section 1102A.20-T and Chapter 11B, Section 1102B.*

TREAD RUN. [For HCD 1/AC] *See Chapter 11A, Section 1102A.20-T.* ***[For DSA/AC]*** *See Chapter 11A, Section 1102A.20-T and Chapter 11B, Section 1102B.*

SECTION 222 – U

[For HCD 1 & HCD 2, DSA/AC, SFM, DSA/SS] UBC *shall mean the most recently adopted edition of the* Uniform Building Code *as published by the International Conference of Building Officials.*

References to other model code sections which are found in any adopted sections of the model code or Title 24, C.C.R., must be compared to the appropriate matrix adoption table to determine if the enforcing agency has adopted the model code section or a modified Title 24, C.C.R., section.

[For HCD 1 & HCD 2, DSA/AC, SFM] **UBC STANDARDS** are those standards published in Volume 3 of the *Uniform Building Code* promulgated by the International Conference of Building Officials, as adopted by this jurisdiction. (See Chapter 35.)

[For DSA/AC] UNREASONABLE HARDSHIP *exists when the enforcing agency finds that compliance with the building standard would make the specific work of the project affected by the building standard unfeasible, based on an overall evaluation of the following factors:*

1. *The cost of providing access.*

2. *The cost of all construction contemplated.*

3. *The impact of proposed improvements on financial feasibility of the project.*

4. The nature of the accessibility which would be gained or lost.

5. The nature of the use of the facility under construction and its availability to persons with disabilities. The details of any finding of unreasonable hardship shall be recorded and entered in the files of the enforcing agency.

SECTION 223 – V

[For HCD 1/AC, DSA/AC] VEHICULAR OR PEDESTRIAN ARRIVAL POINTS. *See Chapter 11A, Section 1102.22-V.*

[For DSA/AC] VEHICULAR WAY *is a route intended for vehicular traffic, such as a street, driveway or parking lot.*

SECTION 224 -- W

WALK. [For HCD 1/AC] *See Chapter 11A, Section 1102A.23-W.* ***[For DSA/AC]*** *See Chapter 11A, Section 1102A.23-W and Chapter 11B, Section 1102B.*

[For DSA/AC] WHEELCHAIR *is a chair mounted on wheels to be propelled by its occupant manually or with the aid of electric power, of a size and configuration conforming to the recognized standard models of the trade.*

[For DSA/AC] WHEELCHAIR OCCUPANT OR WHEELCHAIR USER *is an individual who, due to a physical impairment or disability, utilizes a wheelchair for mobility.*

[For DSA/AC] WORKING LEVEL OR WORKING AREA *is a platform, walkway, runway, floor or similar area fixed with reference to the hazard. This does not include ladders or portable or temporary means used for access, repair or maintenance, provided such means are removed immediately upon completion of the work.*

[For HCD 2, DSA/AC] WORK STATION *is an area defined by equipment and/or work surfaces intended for use by employees only, and generally for one or a small number of employees at a time. Examples include ticket booths; the employee side of grocery store checkstands; the bartender area behind a bar; the employee side of snack bars, sales counters and public counters; guardhouses; toll booths; kiosk vending stands; lifeguard stations; maintenance equipment closets; counter and equipment areas in restaurant kitchens; file rooms; storage areas; etc.*

SECTION 225 – X

No definitions.

SECTION 226 – Y

No definitions.

SECTION 227 – Z

No definitions.

Chapter 3
USE OR OCCUPANCY

For qualified historical buildings or properties, see Chapter 34, Division II.

SECTION 301 – OCCUPANCY CLASSIFIED

Every building, whether existing or hereafter erected, shall be classified by the building official according to its use or the character of its occupancy, as set forth in Table 3-A, as a building of one of the following occupancy groups:

Group A – Assembly (see Section 303.1.1)
Group B – Business (see Section 304.1)
Group C – Organized Camp (See Section 431A)
Group E – Educational (see Section 305.1)
Group F – Factory and Industrial (see Section 306.1)
Group H – Hazardous (see Section 307.1)
Group I – Institutional (see Section 308.1)
Group M – Mercantile (see Section 309.1)
Group R – Residential (see Section 310.1)
Group S – Storage (see Section 311.1)
Group U – Utility (see Section 312.1)

Any occupancy not mentioned specifically or about which there is any question shall be classified by the building official and included in the group that its use most nearly resembles, based on the existing or proposed fire and life hazard.

For changes in use, see Section 3405.

SECTION 310 – REQUIREMENTS FOR GROUP R OCCUPANCIES

310.13 Access to Buildings and Facilities.

310.13.1 [For DSA/AC] *General accessibility requirements can be found in Chapters 10, 11A, 11B, 11C and 30.*

SECTION 311 – REQUIREMENTS FOR GROUP S OCCUPANCIES

311.2 Construction, Height and Allowable Area.

311.2.3 Specific use provisions.

311.2.3.7 [For DSA/AC] Vehicle barriers to motor vehicle fuel dispensers. *For protection of motor vehicle fuel dispensers mounted at grade, see Section 5201.5.1, Part 9, Title 24 (California Fire Code).*

Chapter 4
SPECIAL USE AND OCCUPANCY

SECTION 405 – STAGES AND PLATFORMS

405.1 Scope.

405.1.2 Definitions. For the purpose of this chapter, certain terms are defined as follows:

***STAGE** is a space within a building used for entertainment or presentations, with a stage height of 50 feet (15 240 mm) or less. Curtains, drops, scenery, lighting devices and other stage effects are hung and not retractable except for a single lighting bank; single main curtain, border and legs; and single backdrop.

* In 405.1.2 the cross-reference to DSA/AC adoption of the definition of 'State' was mistakenly left out of the publication of the 2001 California Building Code. This will be submitted for correction in Rulemaking.

Chapter 5
GENERAL BUILDING LIMITATIONS

SECTION 509 – GUARDRAILS

[For DSA/AC] NOTE: *For accessibility requirements for guardrails where required in public buildings, public accommodations, commercial buildings, and publicly funded housing, see Chapter 11B, Section 1133B.5.7.2.*

509.2 Height.

[For DSA/AC] NOTE*: For accessibility requirements for guardrails height in public buildings, public accommodations, commercial buildings, and publicly funded housing, see Chapter 11B, Section 1133B.5.7.3.*

509.3 Openings.

[For DSA/AC] NOTE*: For accessibility requirements for guardrail openings in public buildings, public accommodations, commercial buildings, and publicly funded housing, see Chapter 11B, Section 1133B.5.7.4*

Chapter 10
MEANS OF EGRESS

NOTE: This chapter has been revised in its entirety.
For qualified historical buildings or properties, see Chapter 34, Division II.

SECTION 1001 – ADMINISTRATIVE

1001.1 Scope.

[For DSA/AC] NOTE: *For additional means of egress provisions adopted by DSA/AC, see Chapters 11A for public housing, 11B for public accommodations, 11C for motor vehicle fuel facilities and Chapter 34, Division II for historical buildings.*

SECTION 1003 – GENERAL

1003.2 System Design Requirements.

1003.2.3 Width.

1003.2.3.1 General. The width of the means of egress system or any portion thereof shall be based on the occupant load served.

1003.2.3.2 Minimum width. The width, in inches (mm), of any component in the means of egress system shall not be less than the product determined by multiplying the total occupant load served by such component by the applicable factor set forth in Table 10-B. In no case shall the width of an individual means of egress component be less than the minimum required for such component as specified elsewhere in this chapter.

Where more than one exit or exit-access doorway serves a building or portion thereof, such calculated width shall be divided approximately equally among the means of egress components serving as exits or exit-access doorways for that area.

1003.2.3.3 Maintaining width. If the minimum required width of the means of egress system increases along the path of exit travel based on cumulative occupant loads served, such width shall not be reduced or otherwise diminished to less than the largest minimum width required to that point along the path of exit travel.

EXCEPTION: In other than Group H, Divisions 1, 2, 3 and 7Occupancies, the width of exterior exit doors from an exit enclosure may be based on the largest occupant load of all levels served by such exit enclosure multiplied by a factor of 0.2 (5.08) inch per person.

1003.2.3.4 Exiting from adjacent levels. No cumulative or contributing occupant loads from adjacent building levels need be considered when determining the required width of means of egress components from a given level.

Where an exit enclosure from an upper floor and a lower floor converge at an intermediate floor, the width of the exit from the intermediate floor shall be based on the sum of the occupant loads of such upper and lower floors.

1003.2.3.5 Two-way exits. Where exit or exit-access doorways serve paths of exit travel from opposite directions, the width of such exit or exit-access doorways shall be based on the largest occupant load served. Where such exit or exit-access doorways are required to swing in the direction of exit travel by Section 1003.3.1.5, separate exit width for each path of exit travel shall be provided based on the occupant load of the area that is served.

1003.2.8 Means of egress identification.

1003.2.8.1 ***[For DSA/AC & SFM] Visual exit signs.*** For the purposes of Section *1003.2.8.1*, the term "exit sign" shall mean those required signs that *visually* indicate the path of exit travel within the means of egress system.

1003.2.8.2 Where required. The path of exit travel to and within exits in a building shall be identified by exit signs conforming to the requirements of Section 1003.2.8. Exit signs shall be readily visible from any direction of approach. Exit signs shall be located as necessary to clearly indicate the direction of egress travel. No point shall be more than 100 feet (30 480 mm) from the nearest visible sign.

EXCEPTIONS:
1. Main exterior exit doors that obviously and clearly are identifiable as exit doors need not have exit signs when approved by the building official.

2. Rooms or areas that require only one exit or exit access.

3. In Group R, Division 3 Occupancies and within individual units of Group R, Division 1 Occupancies.

4. Exits or exit access from rooms or areas with an occupant load of less than 50 where located within a Group I, Division 1.1, 1.2 or 2 Occupancy or a Group E, Division 3 day-care occupancy.

1003.2.8.3 Graphics. The color and design of lettering, arrows and other symbols on exit signs shall be in high contrast with their background. Exit signs shall have the word "EXIT" on the sign in block capital letters not less than 6 inches (152 mm) in height with a stroke of not less than 3/4 inch (19 mm). The word "EXIT" shall have letters having a width of not less than 2 inches (51 mm) except for the letter "I" and a minimum spacing between letters of not less than 3/8 inch (9.5 mm). Signs with lettering larger than the minimum dimensions established herein shall have the letter width, stroke and spacing in proportion to their height.

1003.2.8.4 Illumination. Exit signs shall be internally or externally illuminated. When the face of an exit sign is illuminated from an external source, it shall have an intensity of not less than 5 foot candles (54 lx) from either of two electric lamps. Internally illuminated signs shall provide equivalent luminance and be listed for the purpose.

EXCEPTIONS:
1. Approved self-luminous signs that provide evenly illuminated letters that have a minimum luminance of 0.06 foot lambert (0.21 cd/m2).

2. [For SFM] *Approved internally illuminated exit signs which use light-emitting diodes or electroluminescent lamps are not required to have two electric lamps.*

1003.2.8.5 Power source. All exit signs shall be illuminated at all times. To ensure continued illumination for a duration of not less than 11/2 hours in case of primary power loss, the exit signs shall also be connected to an emergency electrical system provided from storage batteries, unit equipment or an on-site generator set, and the system shall be installed in accordance with the Electrical Code. For high-rise buildings, see Section 403.

EXCEPTIONS:
1. Approved self-luminous signs that provide continuous illumination independent of an external power source.

2. [For SFM] *The power supply for internally illuminated exit signs and exit path marking, which do not contain electric lamps, shall normally be provided by the premises. wiring system. In the event of its failure, power shall be automatically provided from storage batteries or an on-site generator set and the system shall be installed in accordance with the California Electrical Code.*

1003.2.8.6 [For DSA/AC & SFM] Tactile exit signage. *For the purposes of Section 1003.2.8.6, the term "tactile exit signs" shall mean those required signs that comply with Section *1117B.5.1-B.*

1003.2.8.6.1 [For DSA/AC & SFM] Where required. *Tactile exit signs shall be required at the following locations:*

1*. Each grade-level exterior exit door shall be identified by a tactile exit with the word, "EXIT."*

2*. Each exit door that leads directly to a grade-level exterior exit by means of a stairway or ramp shall be identified by a tactile exit sign with the following words as appropriate:*

* In 1003.2.8.6 (Tactile exit signage) cross-reference to 1117B.5.1-B is incorrect. Cross-reference will be submitted for correction in Rulemaking to read 1117B.5.1.

A. *"EXIT STAIR DOWN"*

B. *"EXIT RAMP DOWN"*

C. *"EXIT STAIR UP"*

D. *"EXIT RAMP UP"*

3*. Each exit door that leads directly to a grade-level exterior exit by means of an exit enclosure or an exit passageway shall be identified by a tactile exit sign with the words, "EXIT ROUTE."*

4*. Each exit access door from an interior room or area to a corridor or hallway that is required to have a visual exit sign, shall be identified by a tactile exit sign with the words "EXIT ROUTE."*

5*. Each exit door through a horizontal exit shall be identified by a sign with the words, "TO EXIT."*

1003.2.10 Building accessibility. In addition to the requirements of this chapter, means of egress, which provide access to, or egress from, buildings for persons with disabilities, shall also comply with the requirements of Chapter 11.

EXCEPTIONS:
1. [For HCD 1/AC, DSA/AC] *For housing accessibility, see Chapter 11A.*

2. [For DSA/AC] *For accessibility to public accommodations, commercial buildings and publicly funded housing, see Chapter 11B.*

1003.3 Means of egress components. Doors, gates, stairways and ramps that are incorporated into the design of any portion of the means of egress system shall comply with the requirements of this section. These means of egress components may be selectively included in the exit access, the exit or the exit discharge portions of the means of egress system.

1003.3.1 Doors.

1003.3.1.3 Width and height.

[For DSA/AC] NOTE: *For accessibility requirements for width and height of doors in housing accessibility, see Chapter 11A, Section 1120A.2.2, and for public buildings, public accommodations, commercial buildings and publicly funded housing, see Chapter 11B, Section 1133B.2.2.*

1003.3.1.6 Floor Level at Doors

1003.3.1.6.1 [For DSA/AC] Thresholds.

NOTE: *For accessibility requirements for thresholds in accessible housing, see Chapter 11A, Section 1120A.2.4, and for public buildings, public accommodations, commercial buildings and publicly funded housing, see Chapter 11B, Section 1133B.2.4.1.*

***1003.3.1.8 Type of lock or latch.** Regardless of the occupant load served, exit doors shall be openable from the inside without the use of a key or any special knowledge or effort.

EXCEPTIONS:
1. In Groups A, Division 3; B; F; M and S Occupancies and in all churches, key-locking hardware may be used on the main exit where the main exit consists of a single door or pair of doors where there is a readily visible, durable sign on or adjacent to the door stating, "THIS DOOR MUST REMAIN UNLOCKED DURING BUSINESS HOURS". ***[For SFM]*** *THIS DOOR TO REMAIN UNLOCKED WHENEVER THE BUILDING IS OCCUPIED.* The sign shall be in letters not less than 1 inch (25 mm) high on a contrasting background. When unlocked, the single door or both leaves of a pair of doors must be free to swing without operation of any latching device. The use of this exception may be revoked by the building official ***[for HCD 1 & HCD 2]*** *enforcing agency for due cause.*

2. Exit doors from individual dwelling units; ***[for SFM]*** *buildings or rooms*; Group R, Division 3 congregate residences; and guest rooms of Group R Occupancies having an occupant load of 10 or less may be provided with a night latch, dead bolt or security chain, provided such devices are openable from the inside without the use of a key or tool ***[for SFM]*** *or special knowledge or effort* and mounted at a height not to exceed 48 inches (1219 mm) above the finished floor.

---

*The cross-reference Note is shown in error. The provisions for type of lock or latch were intended to be relocated to Chapter 11B, but instead were not relocated. DSA/AC adopts 1003.3.1.8 without the note. This will be submitted for correction in Rulemaking.

*3. **[For SFM]** Mental, penal or corrective institutions where supervisory personnel are continually on duty and effective provisions are made to remove occupants in case of fire or other emergency.*

[For SFM*] *Bars, grilles, grates or similar devices placed over any required exit door shall be openable from the inside without the use of a key, tool, or any special knowledge or effort. Such bars, grilles, grates or similar devices shall be equipped with an approved release device for use by the fire department only on the exterior side for the purpose of fire department emergency access, when required by the authority having jurisdiction.*

Manually operated edge- or surface-mounted flush bolts and surface bolts or any other type of device that may be used to close or restrain the door other than by operation of the locking device shall not be used. Where exit doors are used in pairs and approved automatic flush bolts are used, the door leaf having the automatic flush bolts shall have no doorknob or surface-mounted hardware. The unlatching of any leaf shall not require more than one operation.

EXCEPTIONS:
1. Group R, Division 3 Occupancies.

2. Where a pair of doors serving a room not normally occupied is needed for the movement of equipment, manually operated edge- or surface-mounted bolts may be used.

***[For DSA/AC] NOTE:** For accessibility requirements for type of lock or latch in public buildings, public accommodations, commercial buildings and publicly funded housing, see Chapter 11B, Section 1133B.2.1.*

1003.3.1.10 Special egress-control devices.

***A sign shall be provided on the door located above and within 12 inches (305 mm) of the panic bar or other door-latching hardware reading:

"KEEP PUSHING" THIS DOOR WILL OPEN IN
_____ SECONDS "ALARM WILL SOUND"

Sign lettering shall be at least 1 inch (25mm) in height and shall have a stroke of not less than l/8 inch (3.2 mm).

Regardless of the means of deactivation, relocking of the egress-control device shall be by manual means only at the door.

[For SFM & DSA/AC] *A tactile sign shall also be provided in Braille and raised characters, which complies with Section ****1117B.5.1-B*

1003.3.3 Stairways

1003.3.3.6.1 Handrails.

1003.3.3.6.1.1 [For HCD 1 w/exceptions; HCD 2 w/exceptions 1, 2, 4 and 5; HCD 1/AC w/exception 6] Required handrails.

***[For DSA/AC] NOTE:** For Accessibility requirements for handrails in accessible housing, see Chapter 11A, Section 1120A.4.1, and for public buildings, public accommodations, commercial buildings and publicly funded housing, see Chapter 11B, Section 1133B.4.1.1.*

1003.3.3.13 Stairway Identification

1003.3.3.13.1 [For SFM & DSA/AC] Tactile stair level identification sign. *Tactile stair level identification signs that comply with ****1117B.5.1-B shall be located at each floor level landing in all enclosed stairways in buildings two or more stories in height to identify the floor level. At exit discharge level, the sign shall include a raised five pointed star located to the left of the identifying floor level. The outside diameter of the star shall be the same as the height of the raised characters.*

---

* DSA/AC should be shown as adopting the same provision as SFM for bars, grilles, etc.
** Note is shown in error. Provisions for type of lock or latch were intended to be relocated to Chapter 11B.
*** Text is not adopted by DSA/AC, included for informational purposes only.
**** Section reference should read 1117B.5. All footnotes will be submitted for correction in Rulemaking.

1003.3.4.4 Landings. Ramps having slopes steeper than 1 unit vertical in 20 units horizontal (5% slope) shall have landings at the top and bottom, and at least one intermediate landing shall be provided for each 5 feet (1524 mm) of vertical rise measured between the horizontal planes of adjacent landings. Top landings and intermediate landings shall have a dimension measured in the direction of ramp run of not less than 5 feet (1524 mm). Landings at the bottom of ramps shall have a dimension in the direction of ramp run of not less than 6 feet (1829 mm).*

Doors in any position shall not reduce the minimum dimension of the landing to less than 42 inches (1067 mm) and shall not reduce the required width by more than 7 inches (178 mm) ***[for HCD 1/AC**]*** *3 inches (76 mm)* when fully open.

Where ramp access is provided to comply with the requirements of Chapter 11 and a door swings over a landing, the landing shall extend at least 24 inches (610 mm) beyond the latch edge of the door, measured parallel to the door in the closed position, and shall have a length measured in the direction of travel through the doorway of not less than 5 feet (1524 mm).***

> *******For DSA/AC] NOTE:*** *For accessibility requirements for landings in public buildings, public accommodations, commercial buildings and publicly funded housing, see Chapter 11B, Section 1133B.5.4.1.*

1003.3.4.6 Guardrails.

> ***[For DSA/AC] NOTE:*** *For accessibility requirements for guardrails in public buildings, public accommodations, commercial buildings and publicly funded housing, see Chapter 11B, Section 1133B.5.7.1.*

SECTION 1005 – THE EXIT

*******1005.1 General.** The exit is that portion of the means of egress system between the exit access and the exit discharge or the public way. Components that may be selectively included in the exit include exterior exit doors, exit enclosures, exit passageways and horizontal exits, in addition to those common means of egress components described in Section 1003.3.

SECTION 1008 – REVIEWING STANDS, GRANDSTANDS, BLEACHERS, AND FOLDING AND TELESCOPING SEATING

1008.5 General Requirements.

1008.5.7 Guardrails.

> ***[For DSA/AC] NOTE:*** *For accessibility requirements for perimeter guardrails in public buildings, public accommodations, commercial buildings and publicly funded housing, see Chapter 11B, Section 1133B.5.7.5.*

---

* DSA/AC does not adopt paragraph one. A note will be submitted in Rulemaking to correctly state that DSA/AC does not adopt paragraph one.
** DSA/AC should be included in paragraph 2 for doors. This will be submitted in Rulemaking to correct by adding DSA/AC adoption acronym.
*** DSA/AC does not adopt paragraph three (3). A note will be submitted in Rulemaking to correctly state that DSA/AC does not adopt paragraph three.
*** Note is shown in error. The provisions for doors were intended to be relocated to Chapter 11B, but remained in Chapter 10. A Note will be submitted in Rulemaking correct by deleting the Note.
**** DSA/AC adopts 1005.1, by reference in Chapter 2, definition of EXIT. DSA/AC adoption acronym was mistakenly left out of the publication of the 2001 CA Building Code. This will be submitted for correction in Rulemaking by adding DSA/AC adoption cross-reference in 1005.1.

Chapter 11
ACCESSIBILITY

For qualified historical buildings or properties, see Chapter 34, Division II.

NOTE: *This chapter is not applicable in California.*
See Chapters 11A, 11B and 11C.

Chapter 11A
HOUSING ACCESSIBILITY

SECTION 1101A [FOR HCD 1/AC] – SCOPE

The application of authority and scope of this chapter are referenced in Section 101.17.9. The provisions of Chapter 11A, applied through HCD 1/AC, are applicable to all covered multifamily dwellings except public use area, public accommodations and other areas which are subject to DSA/AC.

1101A.1 General. *Buildings or portions of buildings shall be accessible to persons with disabilities as required by this chapter.*

[For DSA/AC] *Regulations adopting building standards necessary to implement, interpret or make specific the provisions of Government Code Section 12955.1 (d) shall be developed by the State Architect for public housing. See Section 101.17.11 for application of DSA/AC adopted provisions.*

SECTION 1102A [FOR HCD 1/AC & DSA/AC] – DEFINITIONS

For the purpose of this chapter, certain terms are defined as follows:

1102A.1-A ACCESSIBLE *for covered multifamily dwellings is the public- or common-use areas of the building that can be approached, entered and used by individuals with physical disabilities. The phrase "readily accessible to and usable by" is synonymous with accessible.*

ACCESSIBLE ROUTE OF TRAVEL *is a continuous unobstructed path connecting all accessible elements and spaces in an accessible building or facility that can be negotiated by a person with a severe disability using a wheelchair, and that is also safe for and usable by persons with other disabilities.*

ACCESSIBILITY *is the combination of various elements in a building or area, which allows access, circulation and the full use of the building and facilities by persons with physical disabilities.*

ADAPTABLE DWELLING UNIT *is an accessible dwelling unit within a covered multifamily building as designed with elements and spaces allowing the dwelling unit to be adapted or adjusted to accommodate the user. See Sections 1109A and 1112A.*

ASSISTIVE DEVICE *is an aid, tool or instrument used by persons with disabilities to assist in activities of daily living. Examples of assistive devices include tongs, knob-turners and oven-rack pusher/pullers.*

AUTOMATIC DOOR *is a door equipped with a power-operated mechanism and controls that open and close the door automatically upon receipt of a momentary actuating signal. The switch that begins the automatic cycle may be a photoelectric device, floor mat or manual switch.*

1102A.2-B BATHROOM *is, for the purposes of this chapter, a room which includes a water closet (toilet), lavatory (sink), and/or a bathtub and/or a shower. It does not include single-fixture facilities or those with only a water closet and lavatory. It does include a compartmented bathroom. A compartmented bathroom is one in which the fixtures are distributed among interconnected rooms. A compartmented bathroom is considered a single unit and is subject to the requirements for bathrooms for disabled persons.*

BUILDING ENTRANCE ON AN ACCESSIBLE ROUTE *is an accessible entrance to a building that is connected by an accessible route to public transportation stops, to parking or passenger loading zones, or to public streets or sidewalks, if available.*

1102A.3-C COMMON-USE AREAS *are private use areas within multifamily residential facilities where the uses of these areas are limited exclusively to owners, residents and their guests. The areas may be defined as rooms or spaces or elements inside or outside of a building.*

COVERED MULTIFAMILY DWELLINGS *are all dwelling units in buildings consisting of three or more dwelling units or four or more condominium units. Covered Multifamily Dwellings include dwelling units listed in Section 101.17.9. Dwelling units within a single structure separated by firewalls do not constitute separate buildings.*

> ***[For DSA/AC] NOTE:*** *For buildings and complexes containing publicly funded dwelling units, see Section 1111B.5*

CROSS SLOPE *is the slope that is perpendicular to the direction of travel*

CURB CUT *is an interruption of a curb at a pedestrian way, which separates surfaces that are substantially at the same elevation.*

CURB RAMP *is a sloping pedestrian way, intended for pedestrian traffic, which provides access between a walk or sidewalk to a surface located above or below an adjacent curb face.*

1102A.4-D
DETECTABLE WARNING *is a standardized surface or feature built into or applied to walking surfaces or other elements to warn visually impaired persons of hazards in the path of travel. Only approved DSA/AC detectable warning products and directional surfaces shall be installed as provided in the California Code of Regulations (CCR), Title 24, Part 1, Articles 2, 3 and 4. Refer to CCR Title 24, Part 12, Chapter 12-11A and B, for building and facility access specifications for product approval for detectable warning products and directional surfaces.*

> ***[For DSA/AC] NOTE:*** *Detectable warning products and directional surfaces installed after January 1, 2001, shall be evaluated by an independent entity, selected by the Department of General Services, Division of the State Architect-Access Compliance, for all occupancies, including transportation and other outdoor environments, except that when products and surfaces are for use in residential housing, evaluation shall be in consultation with the Department of Housing and Community Development. See Government Code Section 4460.*

DWELLING UNIT *is a single unit of residence for a family of one or more persons. Examples of dwelling units covered by this chapter include condominiums, an apartment unit within an apartment building, and other types of dwellings in which sleeping accommodations are provided but toileting or cooking facilities are shared by occupants of more than one room or portion of the dwelling. Examples of the latter include dormitory rooms and sleeping accommodations in shelters intended for occupancy as residences for homeless persons.*

1102A.5-E EQUIVALENT FACILITATION *is an alternate means of complying with the literal requirements of these standards and specifications that provides access in terms of the purpose of these standards and specifications.*

> ***NOTE:***
> ***1.*** *See Section 101.2, Purpose.*
>
> ***2.*** *In determining equivalent facilitation, consideration shall be given to means that provide for the maximum independence of persons with disabilities while presenting the least risk of harm, injury or other hazard to such persons or others.*

1102A.6-F FACILITY (or FACILITIES) *is a building, structure, room, site, complex or any portion thereof, that is built, altered, improved or developed to serve a particular purpose.*

1102A.7-G GRAB BAR *is a bar for the purpose of being grasped by the hand for support.*

GRADE. *See Chapter 2, Section 208-G.*

GROUND FLOOR *is the floor of a building with a building entrance on an accessible route. A building may have one or more ground floors. Where the first floor containing dwelling units in a building is above grade, all units on that floor must be served by a building entrance on an accessible route. This floor will be considered to be a ground floor.*

1102A.8-H HANDRAIL *is a device to be used as a hand hold.*

1102A.9-I INDEPENDENT ENTITY. *See Chapter 2, Section 210-I.*

INTERNATIONAL SYMBOL OF ACCESSIBILITY *is that symbol adopted by Rehabilitation International's 11th World Congress for the purpose of indicating that buildings and facilities are accessible to persons with disabilities. See Chapter 11B, Figure 11B-6.*

1102A.10-J *(No definitions)*

1102A.11-K KICK PLATE *is an abrasion-resistant plate affixed to the bottom portion of a door to prevent a trap condition and protect its surface.*

1102A.12-L LEVEL AREA *is a specified surface that does not have a slope in any direction exceeding ¼ inch (6.4 mm) in 1 foot (305 mm) from the horizontal (2.083 percent gradient).*

LIFT, SPECIAL ACCESS. *See "special access lifts."*

1102A.13-M MARKED CROSSING *is a crosswalk or other identified path intended for pedestrian use in crossing a vehicular way.*

MULTISTORY DWELLING UNIT *is a dwelling unit with finished living space located on one floor and the floor or floors immediately above or below it.*

1102A.14-N NEWLY CONSTRUCTED *is a building that has never before been used or occupied for any purpose.*

NOSE, NOSING, *is that portion of a tread projecting beyond the face of the riser immediately below.*

1102A.15-O OPEN RISER *is the air space between a tread projecting beyond the face of the riser immediately below.*

1102A.16-P PASSAGE DOOR *is a door other than an exit door through which persons may traverse.*

PEDESTRIAN *is an individual who moves in walking areas with or without the use of walking, assistive devices such as crutches, leg braces, wheelchairs, etc.*

PEDESTRIAN RAMP *is a sloping path of travel intended for pedestrian traffic and as differentiated from a curb ramp.*

PEDESTRIAN WAY *is a route by which a pedestrian may pass.*

PERSON WITH DISABILITY *is an individual who has a physical impairment, including impaired sensory, manual or speaking abilities, that results in a functional limitation in gaining access to and using a building or facility.*

PERSONS WITH PHYSICAL DISABILITIES *means, as with respect to a person, a physical or mental impairment which substantially limits one or more major life activities, a record of such an impairment, or being regarded as having such an impairment. This term does not include current, illegal use of or addiction to a controlled substance. For purposes of these guidelines, an individual shall not be considered to have a physical disability solely because that individual is a transvestite. As used in this definition "physical or mental impairment" includes:*

Impairments which affect ambulation due to cerebral palsy, poliomyelitis, spinal cord injury, amputation, arthritis, cardiac and pulmonary conditions, and other conditions or diseases which reduce mobility, including aging. Any physiological disorder or condition, cosmetic disfigurement, or anatomical loss affecting one or more of the following body systems: neurological; musculoskeletal; special sense organs; respiratory, including speech organs; cardiovascular; reproductive; digestive; genito-urinary; hemic and lymphatic; skin; and endocrine; or

Any mental or psychological disorder, such as mental retardation, organic brain syndrome, emotional or mental illness, and specific learning disabilities. The term "physical or mental impairment" includes, but is not limited to, such diseases and conditions as orthopedic, visual, speech and hearing impairments; cerebral palsy; autism; epilepsy; muscular dystrophy; multiple sclerosis; cancer; heart disease; diabetes; human immunodeficiency virus infection; mental retardation; emotional illness; drug addiction (other than addiction caused by current, illegal use of a controlled substance) and alcoholism. These guidelines are designed to make units accessible or adaptable for people with physical disabilities.

"Major life activities" means functions such as caring for one's self, performing manual tasks, walking, seeing, hearing,

speaking, breathing, learning and working.

"Has a record of such an impairment" means the person has a history of, or has been misclassified as having, a mental or physical impairment that substantially limits one or more major life activities

"Is regarded as having an impairment" means:

The person has a physical or mental impairment that does not substantially limit one or more major life activities but that is treated by another person as constituting such a limitation:

The person has a physical or mental impairment that substantially limits one or more major life activities only as a result of the attitudes of others toward such impairment; or

The person has none of the impairments defined in Section 1102A.16-P but is treated by another person as having such impairment.

***POWDER ROOM** is a room containing only a water closet (toilet) and lavatory (sink).*

***PRIMARY ENTRY** is the principal entrance through which most people enter the building, as designated by the building official.*

***PRIMARY ENTRY LEVEL** is the floor or level of the building on which the primary entry is located.*

***PUBLIC-USE AREAS** means interior or exterior rooms or spaces of a building that are made available to the general public and does not include Common Use Areas as defined in Section 1102A.3-C. Public Use Areas may be provided at a building that is privately or publicly owned.*

***1102A.17-Q** (No definitions)*

***1102A.18-R RAMP.** See "Pedestrian Ramp," Section 1102A.16-P.*

***[For DSA/AC] RECOMMENDED.** See "Recommend," Chapter 2, Section 202.*

***RISER** is the vertical distance from the top of a tread to the top of the next higher tread.*

***1102A.19-S SLEEPING ACCOMMODATIONS** are rooms in which people may sleep; for example, dormitory and hotel or motel guestrooms or suites.*

***SLOPE** is, for the purpose of covered multifamily buildings, the relative steepness of the land between two points and is calculated as follows: The horizontal distance and elevation change between the two points (e.g., an entrance and a passenger loading zone). The difference in elevation is divided by the distance and the resulting fraction is multiplied by 100 to obtain the percentage of slope. For example: if a principal entrance is 10 feet (3048 mm) from a passenger loading zone, and the principal entrance is raised 1 foot (305 mm) higher than the passenger loading zone, then the slope is 1/10 x 100 = 10 percent.*

***SPECIAL ACCESS LIFT** is a hoisting and lowering mechanism equipped with a car or platform, or support which serves two landings of a building or structure and is designed to carry a passenger or passengers and (or) luggage or other material a vertical distance as may be allowed by Section 1110A.2.*

***STAIR RAILING** is a vertical barrier constructed along the open side or sides of stairways and as intermediate stair rails where required on wide stairways.*

***1102A.20-T TOEBOARD** is a vertical barrier erected along the open edges of floor openings or floor holes, platforms and runways.*

***TOWNHOUSE** is a multistory dwelling unit.*

***TREAD** is the horizontal member of a step.*

TREAD DEPTH *is the horizontal distance from front to back of tread, including nosing when used.*

TREAD RUN *is the horizontal distance from the leading edge of a tread to the leading edge of an adjacent tread.*

1102A.21-U *(No definitions)*

1102A.22-V VEHICULAR OR PEDESTRIAN ARRIVAL POINTS *are public or resident parking areas, public transportation stops, passenger loading zones, and public streets or sidewalks.*

1102A.23-W WALK *is a surfaced pedestrian way not located contiguous to a street used by the public. (See definition for "sidewalk.")*

WHEELCHAIR *is a chair mounted on wheels to be propelled by its occupant manually or with the aid of electric power, of a size and configuration conforming to the recognized standard models of the trade.*

WHEELCHAIR OCCUPANT OR WHEELCHAIR USER *is an individual who, due to a physical impairment or disability, utilizes a wheelchair for mobility.*

1102A.24-X *(No definitions)*

1102A.25-Y *(No definitions)*

1102A.26-Z *(No definitions)*

SECTION 1103A [FOR HCD 1/AC & DSA/AC] – BUILDING ACCESSIBILITY

1103A.1 [For HCD 1/AC] Where Required.

1103A.1.1 [For HCD 1/AC] General. *Accessibility to buildings or portions of buildings and facilities shall be provided for all occupancy classifications identified in Section 101.17.9 or 101.17.11 except as modified by this chapter.*

SECTION 1104A [FOR HCD 1/AC & DSA/AC – GROUP U OCCUPANCIES

1104A.1 [For HCD 1/AC] General. *Group U, Division 1 private garages which are accessory to dwelling units required to be adaptable shall be accessible.*

> ***EXCEPTION:*** *A private garage which serves a single covered multifamily dwelling unit is an accessible garage if a person with a disability can exit the dwelling unit's accessible entry door and enter the garage from the driveway.*

**SECTION 1105A [FOR HCD 1/AC] – GROUP R OCCUPANCIES*

1105A.1 [For HCD 1/AC] General. *In Group R Occupancies that are covered multifamily dwellings shall be accessible as provided in this chapter. Public-use and common-use areas serving adaptable dwelling units shall be accessible.*

> ***EXCEPTION:*** *Multistory dwelling units in nonelevator buildings are not subject to these requirements because, in such cases, there is no ground-floor unit.*

SECTION 1106A [FOR HCD 1/AC & DSA/AC] – DOOR SIGNAL DEVICES

1106A.1 For HCD 1/AC] General. *Every primary entrance to a dwelling unit in buildings containing three or more dwelling units shall be provided with a door buzzer, bell, chime or equivalent installation, mounted a maximum of 48 inches*

---

* In 1105A (Group R Occupancies) this section is not adopted by DSA/AC. A cross-reference in the form of a Note will be submitted for correction in Rulemaking to clearly state that this section is not adopted by DSA/AC.

(1219 mm) above the floor, connected to permanent wiring.

SECTION 1107A [FOR HCD 1/AC & DSA/AC] – DESIGN AND CONSTRUCTION

1107A.1 General.

1107A.1.1 [For HCD 1/AC] *When accessibility is required, it shall be designed and constructed as provided in Chapters 11A and 30 of this building code with California amendments.*

1107A.1.2 [For DSA/AC] *When accessibility is required, for publicly funded construction of housing, it shall be designed and constructed as provided in Chapters 11A, 11B and 30 of this building code with California amendments.*

1107A.2 [For HCD 1/AC & DSA/AC] Accessible Route of Travel.

1107A.2.1 [For HCD1/AC & DSA/AC] *When a building, or portion of a building, is required to be accessible or adaptable, an accessible route of travel shall be provided to all portions of the building, to accessible building entrances and between the building and the public way. Except within an individual dwelling unit, an accessible route of travel shall not pass through kitchens, storage rooms, restrooms, closets or other spaces used for similar purposes. At least one accessible route within the boundary of the site shall be provided from public transportation stops, accessible parking and accessible passenger loading zones, and public streets or sidewalks to the accessible building entrance they serve. The accessible route shall, to the maximum extent feasible, coincide with the route for the general public. At least one accessible route shall connect accessible buildings, facilities, elements and spaces that are on the same site. At least one accessible route shall connect accessible building or facility entrances with all accessible spaces and elements and with all accessible dwelling units within the building or facility. An accessible route shall connect at least one accessible entrance of each accessible dwelling unit with those exterior and interior spaces and facilities that serve the accessible dwelling unit.*

1107A.3 [For HCD 1/AC & DSA/AC] Multiple Accessible Routes. *Where more than one route of travel is provided, all routes shall be accessible.* ***[For DSA/AC]*** *See Section 114B.1.2.*

> ***EXCEPTION:*** *Where an elevator is provided for vertical access, only one elevator is required. Where more than one elevator is provided, all elevators shall be accessible.*

1107A.4 [For HCD 1/AC & DSA/AC w/o Except. 1] Pedestrian Way Width. *All walks, sidewalks, halls, corridors, aisles and other spaces that are part of an accessible route shall provide a minimum clear width of 48 inches (1219 mm), except at doors.*

> ***EXCEPTIONS:***
> ***1.*** *Covered multifamily dwelling units shall provide a minimum clear width of 36 inches (914mm), except at doors.*
>
> ***2.*** *For sidewalks or walks serving individual dwelling units in covered multifamily buildings, see Section 1120A.6.*

1107A.5 [For HCD 1/AC & DSA/AC] Ground Floors Above Grade. *When the first floor containing one or more covered dwelling units is a floor above grade, all units must be served by an accessible route.*

> ***EXCEPTION:*** *In multistory dwelling units, i.e., townhouse-type construction, access is not required for buildings without elevators. In multistory dwelling units in buildings with elevators, the story of the unit that is served by the building elevator is the primary entry to the unit. The primary floor shall contain a bathroom or powder room usable to a person in a wheelchair.*

1107A.6 [For HCD 1/AC & DSA/AC] Participation Areas. *Access shall be provided to elements listed in Section 1104B.4.3, Participation Areas.*

1107A.7 [For HCD 1/AC & DSA/AC] Headroom Clearance. *Walks, halls, corridors, passageways, aisles and other circulation spaces shall have 80 inches (2032 mm) minimum clear headroom. If vertical clearance of an area adjoining an accessible route is reduced to less than 80 inches (2032 mm) nominal dimension, a guardrail or other barrier having its leading edge at or below 27 inches (686 mm) above the finished floor shall be provided.*

1107A.8 [For HCD 1/AC & DSA/AC] Changes Greater than One-half Inch. *When an accessible route has changes in level greater than ½ inch (12.7 mm), then a curb ramp, ramp, elevator or special access lift shall be provided. Stairs shall not be part of an accessible route.*

1107A.9 [For HCD 1/AC & DSA/AC] Emergency Egress. *Accessible routes serving any accessible space or element shall also serve as a means of egress for emergencies or connect to an accessible place of refuge. Such accessible routes and places of refuge shall comply with the requirements established by the enforcement authority having jurisdiction.*

1107A.10 [For HCD 1/AC & DSA/AC] Primary Entry Access. *Covered multifamily buildings shall comply with Section 1119A.*

1107A.11 [For HCD 1/AC & DSA/AC] Separate Ground-floor Unit Entrances. *When a ground-floor unit of a building has a separate entrance, each such ground-floor unit shall be served by an accessible route, except for any unit where the terrain or unusual characteristics of the site prohibit the provision of an accessible route to the entrance of that unit.*

1107A.12 [For HCD 1/AC & DSA/AC] Multiple Entrances. *Only one entrance to covered multifamily buildings is required to be accessible to any one ground floor of a building, except in cases where an individual dwelling unit has a separate exterior entrance or where the building contains clusters of dwelling units with each cluster sharing a different exterior entrance. In these cases, more than one entrance may be required to be accessible, as determined by analysis of the site. In every case, the accessible entrance shall be on an accessible route to the covered dwelling units it serves.*

1107A.13 [For HCD 1/AC & DSA/AC] Site Impracticality.

1107A.13.1 [For HCD 1/AC] General. *Covered multifamily dwellings with elevators shall be designed and constructed to provide at least one accessible entrance on an accessible route, regardless of terrain or unusual characteristics of the site. Covered multifamily dwellings without elevators shall be designed and constructed to provide at least one accessible entrance on an accessible route unless terrain or unusual characteristics of the site prevent an accessible route based on the conditions listed below.*

1107A.13.2 [For HCD 1/AC & DSA/AC] Accessible entrance. *Regardless of site considerations described in Section 1119A, an accessible entrance on an accessible route is practical when there is an elevator connecting the parking area with the dwelling units on a ground floor. (In this case, those dwelling units on the ground floor served by an elevator, and at least one of each type of public- and common-use areas, would be subject to these requirements.)*

1107A.13.3 [For HCD 1/AC & DSA/AC] Elevator building. *When a building elevator or elevators are provided as a means of access to dwelling units other than dwelling units on a ground floor, then the building is an elevator building. All dwelling units become covered multifamily dwelling units in that building. The elevator in that building must provide accessibility to all dwelling units in the building, regardless of the slope of the natural terrain.*

1107A.13.4 [For HCD 1/AC & DSA/AC] Elevated walkway. *When an elevated walkway is planned between a building entrance and a vehicular or pedestrian arrival point, and the planned walkway has a slope no greater than 10 percent (1 unit vertical in 10 units horizontal), the floor being served by the elevated walkway becomes a ground floor and accessibility to all covered multifamily dwellings on that ground floor is required.*

1107A.13.5 [For HCD 1/AC & DSA/AC] Slope of finished grade. *If the slope of the finished grade between covered multifamily dwellings and a public- or common-use facility (including parking) exceeds 1 unit vertical in 12 units horizontal (8.33% slope), or where other physical barriers (natural or artificial) or legal restrictions, all of which are outside the control of the owner, prevent the installation of an accessible route of travel, an acceptable alternative is to provide access via a vehicular route, provided necessary site provisions such as parking spaces and curb ramps are provided at the public- or common-use facility.*

1107A.14 [For HCD 1/AC & DSA/AC] Signs. *See Section 1117A.3.*

1107A.15 Adaptable Dwelling Units.

1107A.15.1 [For HCD 1/AC] *Dwelling units shall be considered adaptable when they comply with the appropriate provisions of adaptability contained in Chapter 10 and this chapter.*

1107A.15.2 [For DSA/AC] *Publicly funded dwelling units shall be considered adaptable when they comply with the appropriate provisions of adaptability contained in Chapters 10, 11B and this chapter.*

SECTION 1108A [FOR SFM & DSA/AC] – EGRESS AND AREAS OF REFUGE

1108A.1 [For SFM & DSA/AC] Means of Egress.

1108A.1.1 [For SFM & DSA/AC] General. *All required accessible spaces shall be provided with not less than one accessible means of egress. When more than one exit is required from any accessible space, each accessible portion of the space shall be served by not less than two accessible means of egress. The maximum travel distance from any accessible space to an area of refuge shall not exceed the travel distance set forth in Chapter 10. Each accessible means of egress shall be continuous from each required accessible occupied area to a public way and shall include accessible routes, ramps, exit stairs, elevators, horizontal exits or smoke barriers.*

> ***EXCEPTIONS:***
> ***1.*** *Areas for evacuation assistance are not required in buildings or facilities having a supervised automatic sprinkler system.*
>
> ***2.*** *Areas for evacuation assistance are not required in alterations of existing buildings.*
>
> ***NOTE:*** *This section is also adopted by the Division of the State Architect, Access Compliance, for buildings not regulated by the State Fire Marshal.*

1108A.2 [For SFM & DSA/AC] Emergency Warning Systems/ Accessibility Requirements*. Emergency warning systems as part of the fire-alarm system shall be designed and installed in accordance with NFPA 72 as amended in Chapter 35.*

SECTION 1109A [FOR HCD 1/AC & DSA/AC] -- FACILITY ACCESSIBILITY

1109A.1 [For HCD 1/AC & DSA/AC] General. *When buildings are required to be accessible, building facilities shall be accessible as provided in this section. Where specific floors of a building are required to be accessible, the requirements shall apply only to the facilities located on accessible floors. Doors and openings shall comply with the requirements of Section 1120A.*

> ***EXCEPTION:*** *In covered multifamily dwelling units, except for primary entrances and required exits, doors and openings within units shall provide a minimum of 32 inches (813 mm) nominal clear space, measured between the face of the door and the stop, when the door is in the 90-degree open position to permit the passage of a disabled person in a wheelchair. A 34-inch (864 mm) door is acceptable. The nominal 32-inch (813 mm) clear opening provided by a standard 6-foot (1829 mm) sliding patio door assembly is acceptable. Site access to the primary entry shall be as provided for in this section.*

1109A.2 [For HCD 1/AC & DSA/AC] Bathing and Toilet Facilities.

1109A.2.1 [For HCD 1/AC & DSA/AC] Bathing facilities. *See Tables 1109A.2-1 and 1109A.2- for complying bathrooms.*

1109A.2.2 [For HCD 1/AC & DSA/AC] *Only one bathroom in accessible dwelling units need comply with the requirements for physically disabled persons. See Table 1109A.2-2.*

1109A.2.3 [For HCD 1/AC & DSA/AC] *If a developer desires to provide requirements for physically disabled persons in all bathrooms, use Table 1109A.2-1.*

1109A.2.4 [For HCD 1/AC & DSA/AC] *If a developer desires to provide requirements for physically disabled persons in only one bathroom, use Table 1109A.2-2.*

1109A.2.4.1 [For HCD 1/AC & DSA/AC] *In addition to the requirements listed in Table 1109A.2-2, all bathrooms shall conform to the following general accessibility requirements:*

1. *Title 24, Part 3, California Electrical Code requirements for usable light switches, electrical outlets, thermostats and other environmental controls.*

2. *Minimum 36-inch wide accessible route within each bathroom.*

3. *General door widths and strike side clearance consistent with sections 1109A.1 and 1120A.*

4. *Wall reinforcement for future grab bar installations consistent with Section 1109A.*

1109A.3 [For HCD 1/AC & DSA/AC] Water Closets. *Water closets in bathrooms required to be accessible shall conform to the provisions of this section. The water closet shall be located in a space a minimum of 36 inches (914 mm) in clear width with 48 inches (1219 mm) minimum clear space provided in front of the water closet. This space may include maneuverable space under a lavatory, if provided, arranged so as not to impede access. The minimum height of water closet seats shall be 15 inches (381 mm) above the floor.*

EXCEPTION: *In covered multifamily dwelling units, the water closet may be located in a space 48 inches (1219 mm) in clear width with 36 inches (914 mm) of clear space provided in front of the water closet.*

1109A.3.1 [For HCD 1/AC & DSA/AC] Controls. *Water closet controls for the flush valves shall be mounted on the wide side of toilet areas, no more than 44 inches (1118 mm) above the floor. The force required to activate controls shall be no greater than 5-pound force (lbf)*
(22.2 N).

1109A.4 [For HCD 1/AC & DSA/AC] Lavatories, Mirrors and Towel Fixtures. *At least one accessible lavatory shall be provided within any toilet facility. Where mirrors and towel fixtures are provided at least one of each shall be accessible.*

1109A.4.1 [For HCD 1/AC & DSA/AC] Lavatories. *See Tables 1109A.2-1 and 1109A.2-2.*

1109A.4.2 [For HCD 1/AC & DSA/AC] Plumbing protection. *Hot water and drainpipes accessible under lavatories shall be insulated or otherwise covered. There shall be no sharp or abrasive surfaces under lavatories.*

1109A.4.3 [HCD 1/AC & DSA/AC] Faucet controls. *Faucet controls and operation mechanisms shall be operable with one hand and shall not require tight grasping, pinching or twisting of the wrist.*

The force required to activate controls shall be no greater than 5 pound force (lbf) (22.2 N). Lever operated, push-type and electronically controlled mechanisms are examples of acceptable designs. Self-closing valves are allowed if the faucet remains open for at least 10 seconds.

1109A.5 [For HCD 1/AC & DSA/AC] Fixtures in Adaptable Dwelling Units. *Grab bars need not be installed in either a bathing or toilet facility within an adaptable dwelling unit provided all structural reinforcements for future grab bar installation are provided in the appropriate locations in the adjoining walls. The reinforcement shall be of sufficient length to permit the installation of grab bars as specified. The reinforced wall shall be capable of supporting a load of at least 250 pounds (1112 N).*

1109A.6 [For HCD 1/AC & DSA/AC] Toilet. *Where the toilet is not placed adjacent to a sidewall, the bathroom shall have provisions for installation of floor-mounted, foldaway or similar alternative grab bars. Where the powder room (a room with a toilet and sink) is the only toilet facility located on an accessible level of a multistory dwelling unit, it shall comply with the requirement for reinforced walls for grab bars.*

Where the toilet is placed adjacent to a sidewall, reinforcement shall be installed on both sides or one side and the back. If reinforcement is installed at the back it shall be installed between 32 inches (813 mm) and 38 inches (965 mm) above the floor. The grab bar reinforcement shall be a minimum of 6 inches (152 mm) nominal in height. The backing shall be a minimum of 40 inches (1016 mm) in length.

Reinforcement installed at the side of the toilet shall be installed 32 inches to 38 inches (813 mm to 965 mm) above the floor.

The reinforcement shall be installed a maximum of 12 inches (305 mm) from the rear wall and shall extend a minimum of 26 inches (660 mm) in front of the water closet stool. The grab bar reinforcement shall be a minimum of 6 inches (152 mm) nominal in height.

1109A.7 [For HCD 1/AC & DSA/AC] Bathtub. *A bathtub may be installed without surrounding walls provided reinforced areas are provided for installation of floor-mounted grab bars.*

Where a tub is installed with surrounding walls, grab bar reinforcement shall be installed on each end of the bathtub, 32 inches to 38 inches (813mmto 965 mm) above the floor, extending a minimum of 24 inches (610 mm) aligned with the front edge of the bathtub toward the back wall of the bathtub.

The grab bar reinforcement shall be a minimum of 6 inches (152 mm) nominal in height. Grab bar reinforcement shall be installed on the back wall of the bathtub commencing a maximum of 6 inches (152 mm) above the bathtub rim and extending upward to a point a minimum of 38 inches (965 mm) above the floor. The grab bar backing shall be installed horizontally a length to permit the installation of a 48-inch (1219 mm) grab bar with each end a maximum of 6 inches (152 mm) from the end walls of the bathtub. The grab bar reinforcement shall be a minimum of 6 inches (152 mm) nominal in height.

1109A.8 [For HCD 1/AC & DSA/AC] Shower Stalls. *Glass walled shower stalls shall provide reinforcement for installation of floor-mounted grab bars. Reinforcement for installation of ceiling-mounted grab bars is permitted.*

Grab bar reinforcement shall be installed continuous in the walls of adaptable showers 32 inches to 38 inches (813 mm to 965 mm) above the floor. The grab bar reinforcement shall be a minimum of 6 inches (152 mm) nominal in height.

TABLE 1109A.2-1
Use this table when all bathrooms are complying bathrooms.

1.	*Bathroom entrance doorways shall have an 18-inch (457 mm) clear space to the side of the strike edge of the door on the swing side of the door.*
2.	*Sufficient maneuvering space shall be provided for a person using a wheelchair or other mobility aid to enter and close the door, use the fixtures, reopen the door and exit. Doors may swing into the clear space at any fixture if the maneuvering space is provided. Maneuvering spaces may include any knee space or toe space available below bathroom fixtures.*
3.	*Where the door swings into the bathroom, there shall be a clear space [approximately 30 inches by 48 inches (762 mm by 1219 mm)] within the room to position a wheelchair or other mobility aid clear of the path of the door as it is closed and to permit use of fixtures.*
4.	*There shall be a minimum clear space 48 inches parallel by 30 inches perpendicular (1219 mm by 762 mm) to the side of bathtub or bathtub-shower combination (measured from the foot of the bathtub) to provide for the maneuvering of a wheelchair and transfer to and from the bathing facilities, which may include the maneuverable area under the lavatory.* ***EXCEPTION:*** *Prior to July 1, 1994, condominium dwelling units may provide a minimum clear space 30 inches parallel by 48 inches perpendicular (762 mm by 1219 mm) to the side of a bathtub or bathtub-shower combination.*
4.1.	*A shower spray unit is not required in bathtubs.*
5.	*When a shower stall is provided in an accessible dwelling unit, at least one shower stall shall measure at least 42 inches wide by 48 inches (1067 mm by 1219 mm) deep with an entrance opening of at least 36 inches (914 mm). When a threshold (a recessed drop) is used, it shall be a maximum of ½ inch (12.7 mm) in height and have a beveled or sloped angle not exceeding 45 degrees from the horizontal. Maximum slope of the shower floor shall be 1/2 inch (12.7 mm) per foot in any direction and shall slope toward the rear to a drain located within 6 inches (152 mm) of the rear wall. The floor surfaces shall be of Carborundum or grit-faced tile or of material providing equivalent slip resistance.*
5.1	*Doors and panels of shower and bathtub enclosures shall be substantially constructed from approved, shatter-resistant materials. Hinged shower doors shall open outward. Glazing used in doors and panels of shower and bathtub enclosures shall be fully tempered, laminated safety glass or approved plastic. When glass is used, it shall have minimum thickness of not less than 1/8 inch (3 mm) when fully tempered, or 1/4 inch (6 mm) when laminated, and shall pass the test requirement of this part, Chapter 24 Glass and Glazing. Plastics used in doors and panels of showers and bathtub enclosures shall be of a shatter-resistant type.*
6.	*Walls must be reinforced to support grab bars as required by Section 1109A.5.*
7.	*Space requirements for the installation of water closets shall be as specified in Section 1109A.3.*
8.	*Structural reinforcements for future grab bar installation shall be as specified in Section 1109A.5.*
9.	*Vanities and lavatories shall be installed with the centerline of the fixture a minimum of 18 inches (457 mm) horizontally from an adjoining wall or fixture. The top of the fixture rim shall be a maximum of 34 inches (864 mm) above the finished floor. Cabinets under lavatories are acceptable provided the bathroom has space to allow a parallel approach by a person in a wheelchair and the lavatory cabinets are designed with adaptable knee space. Knee space shall be provided as follows:* *1. The knee space shall be at least 30 inches (762 mm) wide and 8 inches deep (203 mm).* *2. The knee space shall be at least 29 inches (737 mm) high at the front face and reducing to not less than 27 inches (686 mm) at a point 8 inches (203 mm) back from the front edge.* *3. The knee space required in this section shall be provided by one of the following:* *A. The space beneath the lavatory is left clear and unobstructed.* *B. Any cabinet beneath the lavatory is removable without the use of specialized knowledge or specialized tools or,* *C. Doors to the cabinet beneath the lavatory are removable or openable to provide the required unobstructed knee space.* *Toe space shall be provided as follows:* *1. Shall be at least 30 inches (762 mm) wide and centered on the lavatory.* *2. Shall be at least 17 inches (432 mm) deep, measured from the front edge.* *3. Shall be at least 9 inches (229 mm) high from the floor.* *In each such case, the finish floor beneath the lavatory shall be extended to the back of the wall.*

TABLE 1109A.2-2

Use this table when only one complying bathroom is provided. If Table 119A.2-2 is used, all other bathrooms and powder rooms within the dwelling unit shall be on an accessible route with usable entry doors.

1. Bathroom entrance doorways shall have an 18-inch (457 mm) clear space to the side of the strike edge of the door on the swing side of the door.
2. Sufficient maneuvering space shall be provided for a person using a wheelchair or other mobility aid to enter and close the door, use the fixtures, reopen the door and exit. Doors may swing into the clear space at any fixture if the maneuvering space is provided. Maneuvering spaces may include any knee space or toe space available below bathroom fixtures.
3. Where the door swings into the bathroom, there shall be a clear space [approximately 30 inches by 48 inches (762 mm by 1219 mm)] within the room to position a wheelchair or other mobility aid clear of the path of the door as it is closed and to permit use of fixtures.
4. Where the door swings out, a clear space is provided within the bathroom for a person using a wheelchair or other mobility aid to position the wheelchair such that the person is allowed use of fixtures. There also shall be clear space to allow persons using wheelchairs to reopen the door to exit.
5. There shall be a minimum clear space 48 inches parallel by 30 inches perpendicular (1219 mm by 762 mm) to the side of a bathtub or bathtub shower combination (measured from the foot of the bathtub) to provide for the maneuvering of a wheelchair and transfer to and from the bathing facilities, which may include the maneuverable area under the lavatory.
5.1. A shower spray unit is not required in bathtubs.
6. When a shower stall is provided in an accessible dwelling unit, at least one shower stall shall measure at least 42 inches wide by 48 inches deep (1067 mm by 1219 mm) with an entrance opening of at least 36 inches (914 mm). When a threshold (a recessed drop) is used, it shall be a maximum of 1/2 inch (12.7 mm) in height and have a beveled or sloped angle not exceeding 45 percent from the horizontal. Maximum slope of the shower floor shall be 1/2 inch (12.7 mm) per foot in any direction and shall slope toward the rear to a drain located within 6 inches (152 mm) of the rear wall. The floor surfaces shall be of Carborundum or grit-faced tile or of material providing equivalent slip resistance.
6.1 Doors and panels of shower and bathtub enclosures shall be substantially constructed from approved, shatter-resistant materials. Hinged shower doors shall open outward. Glazing used in doors and panels of shower and bathtub enclosures shall be fully tempered, laminated safety glass or approved plastic. When glass is used, it shall have minimum thickness of not less than 1/8 inch (3 mm) when fully tempered, or 1/4 inch (6 mm) when laminated, and shall pass the test requirements of this part, Chapter 24 Glass and Glazing. Plastics used in doors and panels of showers and bathtub enclosures shall be of a shatter- resistant type.
7. Walls must be reinforced to support grab bars as required by Section 1109A.5.
8. Space requirements for the installation of water closets shall be as specified in Section 1109A.3.
9. Structural reinforcements for future grab bar installation shall be as specified in Section 1109A.5.
10. When both tub and shower fixtures are provided in the bathroom, at least one shall be made accessible. When two or more lavatories in a bathroom are provided, at least one shall be made accessible.
11. Toilets shall be located within bathrooms in a manner that permits a grab bar to be installed on one side of the fixture. In locations where toilets are adjacent to walls or bathtubs, the center line of the fixture shall be a minimum of 18 inches (457 mm) from the obstacle. The other (nongrab bar) side of the toilet fixture shall be a minimum of 18 inches (457 mm) from the finished surface of adjoining walls, vanities or from the edge of a lavatory.
12. Vanities and lavatories shall be installed with the centerline of the fixture a minimum of 18 inches (457 mm) horizontally from an adjoining wall or fixture. The top of the fixture rim shall be a maximum of 34 inches (864 mm) above the finished floor. Cabinets under lavatories are acceptable provided the bathroom has space to allow a parallel approach by a person in a wheelchair and the lavatory cabinets are designed with adaptable knee space. Knee space shall be provided as follows: *1. The knee space shall be at least 30 inches (762 mm) wide and 8 inches deep (203 mm).* *2. The knee space shall be at least 29 inches (737 mm) high at the front face and reducing to not less than 27 inches (686 mm) at a point 8 inches (203 mm) back from the front edge.* *3. The knee space required in this section shall be provided by one of the following:* *A. The space beneath the lavatory is left clear and unobstructed.* *B. Any cabinet beneath the lavatory is removable without the use of specialized knowledge or specialized tools or,* *C. Doors to the cabinet beneath the lavatory are removable or openable to provide the required unobstructed knee space.* *Toe space shall be provided as follows:* *1. Shall be at least 30 inches (762 mm) wide and centered on the lavatory.* *2. Shall be at least 17 inches (432 mm) deep, measured from the front edge.* *3 Shall be at least 9 inches (229 mm) high from the floor.* *In each such case, the finish floor beneath the lavatory shall be extended to the back of the wall.*

SECTION 1110A [FOR HCD 1/AC & DSA/AC] – ELEVATORS AND SPECIAL ACCESS (WHEEL-CHAIR) LIFTS

1110A.1 [For HCD 1/AC & DSA/AC] Elevators. *Elevators provided in covered multifamily buildings shall be accessible and comply with Chapter 11A, and Title 24, Part 7, of the California Code of Regulations.*

> ***EXCEPTION:*** *Private elevators serving only one dwelling unit.*

1110A.1.1 [For HCD 1/AC & DSA/AC] General.

1110A.1.2 [For HCD 1/AC & DSA/AC] Size of cab and control locations and requirements for accommodation of people with disabilities. *In covered multifamily buildings two or more stories in height served by an elevator, or a building served by an elevator required by Chapter 11A or 11B, or a building served by an elevator required for accessibility by Chapter 1 and Sections 101.17.9 and 101.17.11 all elevators provided shall accommodate a wheelchair.*

> ***EXCEPTION:*** *When the enforcing agency determines that compliance with any regulation under this section would create an unreasonable hardship, an exception to such regulation shall be granted when equivalent facilitation is provided, and where it can be demonstrated that a person using a wheelchair can enter and operate the elevator.*

1110A.1.3 [For HCD 1/AC & DSA/AC] Operation and leveling. *The elevator shall be automatic and be provided with a self-leveling feature that will automatically bring the car to the floor landings within a tolerance of plus or minus ½ inch (12.7 mm) under normal loading and unloading conditions. This self-leveling shall, within its zone, be entirely automatic and independent of the operating device and shall correct the overtravel or undertravel. The car shall also be maintained approximately level with the landing, irrespective of load.*

The clearance between the car platform sill and the edge of the hoistway landing shall be no greater than 1 and ¼ inch (32 mm).

1110A.1.4 [For HCD 1/AC & DSA/AC] Door protective and reopening devices. *Doors closed by automatic means shall be provided with a door-reopening device that will function to stop and reopen a car door and adjacent hoistway door in case the car door is obstructed while closing.*

This reopening device shall also be capable of sensing an object or person in the path of a closing door without requiring contact for activation at a nominal 5 inches and 29 inches (127 mm and 737 mm) above the floor.

Door-reopening devices shall remain effective for a period of not less than 20 seconds.

After such an interval, the doors may close in accordance with the requirements of ANSI 17.1-86, the American Society of Mechanical Engineers (ASME) document ASME 17.1-1990.

1110A.1.5 [For HCD 1/AC & DSA/AC] Hall call. *The minimum acceptable time from notification that a car is answering a call (lantern and audible signal) until the doors of the car start to close shall be calculated by the following equation:*

T = D / (1.5 ft/s) or T = D / (445 mm/s)

*Where T is the total time in seconds and D is the distance from a point in the lobby or landing area 60 inches (1524 mm) directly in front of the farthest call button controlling that car to the centerline of its hoistway door (see Figure *11A-C). For cars with in-car lanterns, T begins when the lantern is visible from the vicinity of hall call buttons and an audible signal is sounded.*

1110A.1.6 [For HCD 1/AC & DSA/AC] Car call. *The minimum acceptable time for doors to remain fully open shall not be less than five seconds.*

---

* In 1110A.1.5 (Hall call) in the 2nd paragraph the cross-reference to Figures 11A-C is incorrect, the correct cross-reference are Figures 11A A-C. This will be submitted for correction in Rulemaking.

1110A.1.7 [For HCD 1/AC & DSA/AC] Car inside. *The car inside shall allow for the turning of a wheelchair. The minimum clear distance between walls or between wall and door, excluding return panels, shall not be less than 80 inches by 54 inches (2032 mm by 1372 mm) for center-opening doors, and 68 inches by 54 inches (1727 mm by 1372 mm) for side-slide opening doors. See Figure 11A-A. Minimum distance from wall to return panel shall not be less than 51 inches (1295 mm).*

*Elevator floor buttons shall be within 4 feet 6 inches (1372 mm) above the finish floor for side approach and 48 inches (1219 mm) for front approach. Except for photoelectric tube bypass switches, emergency controls, including the emergency stop and alarm, shall be grouped in or adjacent to the bottom of the panel and shall be no lower than 2 feet 11 inches (889 mm) from the floor. For multiple controls only, one set must comply with these height requirements. Floor buttons shall be provided with visual indicators to show when each call is registered. The visual indicators shall be extinguished when each call is answered. The emergency telephone handset shall be positioned no higher than 4 feet (1219 mm) above the floor, and the handset cord shall be a minimum of 2 feet 5 inches (737 mm) in length. If the telephone system is located in a closed compartment, the compartment door hardware shall be lever type conforming to the provisions of Section *1004.3, type of lock or latch. Emergency intercommunication shall not require voice communication.*

NOTE: *Where possible, a 48-inch (1219 mm) maximum height for elevator floor buttons is preferred.*

1110A.1.8 [For HCD1/AC & DSA/AC] Car controls. *Identification for the visually impaired shall be as follows:*

Passenger elevator car controls shall have a minimum dimension of ¾-inch (19.1 mm) and shall be raised 1/8-inch (3.2 mm) plus or minus 1/32-inch (0.8 mm) above the surrounding surface.

Control buttons shall be illuminated, shall have square shoulders and shall be activated by a mechanical motion that is detectable.

All control buttons shall be designated by a 5/8-inch-minimum (15.9 mm), Arabic numeral, standard alphabet character, or standard symbol immediately to the left of the control button. A Braille symbol shall be located immediately below the numeral, character or symbol. A minimum clear space of 3/8-inch (9.5mm) or other suitable means of separation shall be provided between rows of control buttons.

NOTE: *See Figure 11A-B.*

The raised characters shall be white on a black background. Controls and emergency equipment identified by raised symbols shall include, but not be limited to, door open, door close, alarm bell, emergency stop and telephone. The call button for the main entry floor shall be designated by a raised star at the left of the floor designation.

1110A.1.9 [For HCD 1/AC & DSA/AC] Car position indicator and signal. *Call operation buttons shall be within 3 feet 6 inches (1067 mm) of the floor. Buttons shall be a minimum of ¾ -inch (19.1 mm) in size and shall be raised 1/8-inch (3.2 mm) plus or minus 1/32-inch (0.8mm) above the surrounding surface. Visual indication shall be provided to show each call registered and extinguished when answered. Objects adjacent to, and below, hall call buttons shall not project more than 4 inches (102 mm) from the wall.*

1110A.1.10 [For HCD 1/AC] Minimum illumination. *The minimum illumination at the car controls threshold and the landing when the car and landing doors are open shall not be less than 5 foot-candles (54 lx).*

1110A.1.11 [For HCD 1/AC] Hall lantern. *A visual and audible signal shall be provided at each hoistway entrance indicating to the prospective passenger the car answering the call and its direction of travel as follows:*

The visual signal for each direction shall be a minimum of 2-½ inches (64mm) high by 2-½ inches (64 mm) high by 2-½ inches (64 mm) wide, and visible from the proximity of the hall call button.

---

* In 1110A.1.7 (Car inside) in the 2nd paragraph the reference to Section 1004.3 is incorrect. Reference should read 1003.3.1.8. This will besubmitted fr correcttio in Rulemaking.

The audible signal shall sound once for the up direction and twice for the down direction or of a configuration that distinguishes between up and down elevator travel.

The center line of the fixture shall be located a minimum of 6 feet (1829 mm) in height from the lobby floor.

The use of in-car lanterns, located in or on the car doorjambs, visible from the proximity of the hall call buttons and conforming to the above requirements shall or will be acceptable.

The use of arrow shapes are preferred for visible signals.

1110A.1.12 [For HCD 1/AC] Doorjamb marking. *Passenger elevator landing jambs on all elevator floors shall have the number of the floor on that the jamb is located designated by raised Arabic numerals which are a minimum of 2 inches (51 mm) in height and raised Braille symbols that conform to Section *1117B.5.2 located approximately 5 feet (1524 mm) above the floor on the jamb panels on both sides of the door so that they are visible from within the elevator. Raised Braille symbols shall be placed directly to the left of the corresponding raised Arabic numerals. The raised characters shall be on a contrasting background. See Figure 11A-B.*

1110A.1.13 [For HCD 1/AC] Location. *Passenger elevators shall be located near a major path of travel and provisions shall be made to ensure that they remain accessible and usable at all times the building is occupied.*

1110A.2 [For HCD 1/AC & DSA/AC] Special Access (Wheelchair) Lifts. *Special access wheelchair lifts may be provided between levels, in lieu of passenger elevators, when the vertical distance between landings, as well as the structural design and safeguards are as allowed by the State of California, the Department of Industrial Relations, Division of Occupational Safety and Health, and any applicable safety regulations of other administrative authorities having jurisdiction.*

If lifts are provided, they shall be designed and constructed to facilitate unassisted entry, operation, and exit from the lift, and shall comply with restrictions and enhancements of this section in conjunction with Section 3093 to 3094.5, Part 7 of the California Code of Regulations.

SECTION 1111A [FOR HCD 1/AC & DSA/AC] – TELEPHONES

1111A.1 [For HCD 1/AC & DSA/AC] General. *If public telephones are provided, they shall comply with this section. On floors where public telephones are provided, at least one telephone shall be accessible. On any floor where two or more banks of multiple telephones are provided, at least one telephone in each bank shall be accessible.*

1111A.2 [For HCD 1/AC & DSA/AC] Clear Floor Ground Space. *A clear floor or ground space at least 30 inches by 48 inches (762 mm by 1219 mm) that allows either a forward or parallel approach by a person using a wheelchair shall be provided at telephones.*

1111A.3 [For HCD 1/AC & DSA/AC] Size and Approach. *The minimum clear floor ground space required to accommodate a single, stationary wheelchair and occupant is 30 inches by 48 inches (762 mm by 1219 mm). The minimum clear floor or ground space for wheelchairs may be positioned for forward or parallel approach to an object. Clear floor or ground space for*
wheelchairs may be part of the knee space required under some objects.

1111A.4 [For HCD 1/AC & DSA/AC] Relationship of Maneuvering Clearances to Wheelchair Spaces. *One full unobstructed side of the clear floor or ground space for a wheelchair shall adjoin another wheelchair clear floor space. If a clear floor space is located in an alcove or otherwise confined on all or part of three sides, additional maneuvering clearances shall be provided.*

1111A.5 [For HCD 1/AC & DSA/AC] Floor Surfaces of Wheelchair Spaces. *Floor surfaces of wheelchair spaces shall conform to the figures in Chapter 11B. Bases, enclosures and fixed seats shall not impede approaches to telephones by people who use wheelchairs.*

---

* In 1110A.1.12 (Doorjamb marking) the cross-reference to Section 1117B.5.2 is incorrect. Section references should read Sections 1117B.5.5 and 1117B.5.6. This will be submitted for correction in Rulemaking.

1111A.6 [For HCD 1/AC & DSA/AC] Mounting Height. *The highest operable part of the telephone shall be within the reach ranges specified in the figures in Chapter 11B. Telephones mounted diagonally in a corner that require wheelchair users to reach diagonally shall have the highest operable part no higher than 54 inches (1372 mm) above the floor.*

1111A.7 [For HCD 1/AC & DSA/AC] Enclosures. *If telephone enclosures are provided, they may overhang the clear floor space required in Sections 1111A.2, 1111A.3 and 1111A.4 with the following limits:*

1111A.7.1 [For HCD 1/AC & DSA/AC] Side reach possible. *The overhang shall be no greater than 19 inches (483 mm). The height of the lowest overhanging part shall be equal to or greater than 27 inches (686 mm).*

1111A.7.2 [For HCD 1/AC & DSA/AC] Full-height enclosures. *Entrances to full-height enclosures shall be 30 inches (762 mm) minimum.*

1111A.7.3 [For HCD 1/AC & DSA/AC] Forward reach required. *If the overhang is greater than 12 inches (305 mm), then the clear width of the enclosure shall be 30 inches (762 mm) mini-mum; if the clear width of the enclosure is less than 30 inches (762 mm), then the height of the lowest overhanging part shall be equal to or greater than 27 inches (686 mm).*

1111A.8 [For HCD 1/AC & DSA/AC] Equipment for Hearing Impaired People. *Telephones shall be equipped with a receiver that generates a magnetic field in the area of the receiver cap. A reasonable number of the public telephones provided, but always at least one on each floor or in each bank, whichever is more, in a building or facility, shall be equipped with a volume control. Such telephones shall be capable of a minimum of 12 dbA and a maximum of 18 dbA above normal. If an automatic reset is provided, 18 dbA may be exceeded. Public telephones with volume control shall be hearing aid compatible and shall be identified by a sign containing a depiction of a telephone handset with radiating sound waves.*

1111A.9 [For HCD 1/AC & DSA/AC] Text Telephones. *If a total of four or more public pay telephones are provided at the interior and exterior of a site, and if at least one of the total is in an interior location, then at least one interior public text telephone shall be provided.*

1111A.10 [For HCD 1/AC & DSA/AC] Controls. *Telephones shall have push-button controls where service for such equipment is available.*

1111A.11 [For HCD 1/AC & DSA/AC] Cord Length. *The cord from the telephone to the handset shall be at least 29 inches (737 mm) long.*

1111A.12 [For HCD 1/AC & DSA/AC] Telephone Books. *If telephone books are provided, they shall be located in a position that complies with the reach ranges in the figures in Chapter 11B.*

SECTION 1112A [FOR HCD 1/AC & DSA/AC] – KITCHENS

1112A.1 [For HCD 1/AC & DSA/AC] General. *Kitchens within adaptable dwelling units shall be accessible.*

1112A.2 [For HCD1/AC & DSA/AC] Clear Floor Space. *Kitchens in covered multifamily dwelling units that are required to provide access to persons with physical disabilities shall have a clear floor space at least 30 inches by 48 inches (762 mm by 1219 mm) that allows a parallel approach by a person in a wheelchair at the range or cook top and either a parallel or forward approach at the oven, dishwasher, refrigerator/freezer and trash compactor.*

> ***EXCEPTION:*** *In covered multifamily dwelling units containing U shaped kitchens with a range or cook top at the base of the U, a 60-inch (1524 mm) clear width between cabinet fronts, appliances or fixtures shall be provided to allow a parallel approach, or base cabinets shall be removable at that location to a height of 27 inches (686 mm) above the floor to allow knee space for a forward approach. Base cabinets directly under kitchen sink counter area, including toeboard and shelving, shall be removable, without the use of special tools or knowledge, to provide clearance for a wheelchair. Finished flooring shall be installed on the floor beneath such countertop. A minimum clear space of 48 inches (1219 mm) shall be provided for all other kitchen designs.*

1112A.3 [For HCD 1/AC & DSA/AC] Kitchen Sink Faucet Controls. *Faucet controls and operating mechanism shall be operable with one hand and shall not require tight grasping, pinching or twisting of the wrist. The force required to activate controls shall be no greater than 5 pound force (lbf) (22.2 N). Lever-operated, push-type and electronically controlled mechanisms are examples of acceptable designs. Self-closing valves are allowed if the faucet remains open for at least 10*

seconds.

1112A.4 [For HCD 1/AC & DSA/AC] Countertops. *A minimum linear length of 30 inches (762 mm) of countertop shall be provided for the kitchen sink, and a minimum linear length of 30 inches (762 mm) of countertop shall be provided for a work surface, both of which shall be designed to enable repositioning to a minimum height of 28 inches (711 mm). The sink and work surface may be a single integral unit, or be separate components. The base cabinets directly under sink and work surface counter areas which are designed for repositioning shall be removable to provide clearance for a wheelchair.*

> ***EXCEPTIONS:***
> ***1.*** *Only 5 percent of the covered multifamily apartment house dwelling units that are required to be accessible are required to comply with the requirements for repositionable countertops. All other covered multifamily dwelling units are exempt.*
>
> ***2.*** *Stone, cultured stone and tiled countertops may be used without meeting the repositioning requirements.*
>
> ***3.*** *In covered multifamily apartment house dwelling units, two 15-inch (381 mm) minimum width breadboards may be provided in lieu of the required 30 inches (762 mm) of countertop work surface.*

The sides and back of adjacent cabinets, which may become exposed to moisture or food handling when a countertop is lowered, shall be constructed of durable, nonabsorbent materials appropriate for such uses. Finished flooring shall be installed on the floor beneath such countertop.

1112A.5 [For HCD 1/AC & DSA/AC] Lower Shelving. *Lower shelving and/or drawer space shall be provided in the kitchen at a height of no more than 48 inches (1219 mm).*

1112A.6 [For HCD 1/AC & DSA/AC] Base Cabinets. *In covered multifamily dwelling units required to be accessible, base cabinets directly under kitchen sink counter area, including toeboard and shelving, shall be removable without the use of specialized tools or specialized knowledge to provide clearance for a wheelchair. Finished flooring shall be provided on the floor beneath the countertop.*

SECTION 1113A [FOR HCD 1/AC & DSA/AC] – SWIMMING POOLS/DRINKING FOUNTAINS

1113A.1 [For HCD 1/AC & DSA/AC] Swimming Pools. *Swimming pools required to be accessible to persons with physical disabilities shall comply with the provisions of Chapters 11B and 31B.*

1113A.2 [For HCD 1/AC] Drinking Fountains.

1113A.2.1 Accessible route. *If provided in covered multifamily buildings, drinking fountains and water coolers shall be on an accessible route. Wall-mounted and post-mounted cantilevered drinking fountains and water coolers shall have a clear knee space a minimum of 30 inches (762 mm) in width and shall also have a minimum clear floor space 30 inches by 48 inches (762mm by 1219 mm) to allow a person in a wheelchair to approach the unit facing forward.*

1113A.2.2 Water flow. *The spout shall provide a flow of water at least 4 inches (102 mm) high so as to allow the insertion of a cup or glass under the flow of water. The force required to activate controls shall be no greater than 5 pound force (lbf) (22.2 N).*

SECTION 1114A [FOR HCD 1/AC & DSA/AC] – SIGNS

1114A.1 [For HCD 1/AC & DSA/AC] General. *All accessible toilet and bathing facilities shall be identified by the international symbol of accessibility. Signs need not be provided for facilities within an adaptable covered multifamily dwelling unit, or within an accessible patient or guest room.*

SECTION 1115A [FOR HCD 1/AC & DSA/AC] – LAUNDRY ROOMS

1115A.1 [For HCD 1/AC & DSA/AC] General. *If clothes-washing machines and clothes dryers are provided in covered multifamily buildings or dwelling units, at least one of each type of appliance shall be provided in each laundry area. Laundry rooms serving covered multifamily dwellings are not required to have front-loading clothes washers. Where front-loading clothes washers are not provided, management shall provide assistive devices, on request, if necessary to permit a resident to use a top-loading clothes washer.*

SECTION 1116A [FOR HCD 1/AC & DSA/AC] – FLOORING

1116A.1 [For HCD 1/AC & DSA/AC] General. *If carpet or carpet tile is used in a common-use area or public-use area on a ground or floor surface, it shall have firm backing or no backing.*
The maximum pile height shall be ½ inch (12.7 mm). Exposed edges of carpet shall be fastened to floor surfaces and have trim along the entire length of the exposed edge. Carpet edge trim shall comply with the requirements for changes in level.

SECTION 1117A [FOR HCD 1/AC & DSA/AC] – EXTERIOR ROUTES OF TRAVEL

1117A.1 [For HCD 1/AC & DSA/AC] General. *When more than one building or facility is located on a site, accessible routes of travel shall be provided between buildings and accessible site facilities. The accessible route of travel shall be the most practical direct route between accessible building entrances, accessible site facilities and the accessible entrance to the site.*

1117A.2 [For HCD 1/AC & DSA/AC] Design and Construction. *Use the provisions of this chapter and Chapter 10.*

1117A.3 [For HCD 1/AC & DSA/AC] Signs. *At every primary public entrance and at every major junction along or leading to an accessible route of travel, there shall be a sign displaying the International Symbol of Accessibility. Signs shall indicate the direction to accessible building entrances and facilities.*

1117A.4 [For HCD 1/AC & DSA/AC] Curb Ramps.

1117A.4.1 [For HCD 1/AC & DSA/AC] General. *Curb ramps shall be constructed at each corner of street intersections and where a pedestrian way crosses a curb. The preferred and recommended location for curb ramps is in the center of the crosswalk of each street corner. Where it is necessary to locate a curb ramp in the center of the curb return and the street surfaces are marked to identify pedestrian crosswalks, the lower end of the curb ramp shall terminate within such crosswalk areas. Curb ramps do not require handrails.*

1117A.4.2 [For HCD 1/AC & DSA/AC] Width of curb ramps. *Curb ramps shall be a minimum of 4 feet (1219 mm) in width and shall lie, generally, in a single sloped plane, with a minimum of surface warping and cross slope.*

1117A.4.3 [For HCD 1/AC & DSA/AC] Slope of curb ramps. *The slope of curb ramps shall not exceed 1 unit vertical to 12 units horizontal (8.33% slope). Transitions from ramps to walks, gutters or streets shall be flush and free of abrupt changes, except that curb ramps shall comply with Section 1117A.4.5. The slope of the fanned or flared sides of curb ramps shall not exceed 1 unit vertical to 8 units horizontal (12.5% slope). If a curb ramp is located where pedestrians must walk across the ramp, then it shall have flared sides; the maximum slope of the flare shall be 1 unit vertical in 10 units horizontal (10% slope). Curb ramps with returned curbs may be used where pedestrians would not normally walk across the ramp.*

1117A.4.4 [For HCD 1/AC & DSA/AC] Level landing. *A level landing 4 feet (1219 mm) deep shall be provided at the upper end of each curb ramp over its full width to permit safe egress from the ramp surface, or the slope of the fanned or flared sides of the curb ramp shall not exceed 1 unit vertical to 12 units horizontal (8.33% slope).*

1117A.4.5 [For HCD 1/AC & DSA/AC] Beveled lip. *The lower end of each curb ramp shall have a ½-inch (13 mm) lip beveled at 45 degrees.*

1117A.4.6 [For HCD 1/AC & DSA/AC] Finish. *The surface of each curb ramp and its flared sides shall be stable, firm and slipresistant and shall be of contrasting finish from that of the adjacent sidewalk.*

1117A.4.7 [For HCD 1/AC & DSA/AC] Detectable warnings. *A curb ramp shall have a detectable warning that extends the full width and depth of the curb ramp when the ramp slope is less than 1 unit vertical in 15 units horizontal (6.7% slope). Detectable warnings shall consist of raised truncated domes with a diameter of nominal 0.9 inch (22.9 mm), a height of nominal 0.2 inch (5.08 mm) and a center-to-center spacing of nominal 2.35 inches (59.7 mm) and shall contrast visually with adjoining surfaces, either light-on-dark or dark-on-light. Warning surfaces shall be of the color yellow conforming to Federal Color No. 33538, as shown in Table IV of Standard No. 595B.Where the color value contrast between the yellow warning and the main walking surface is less than 70 percent, a 1-inch-wide (25 mm) black strip shall separate the yellow warning from the main walking surface. Contrast shall be determined by:*

Contrast = [(B1-B2/B1 1X 100%) where B1 = light reflectance value (LRV) of the lighter area and B2 = light reflectance value (LRV) of the darker area]. The material used to provide contrast shall be an integral part of the walking surface. The domes may be constructed in a variety of methods, including cast in place or stamped, or they may be part of a prefabricated surface treatment.

Only approved DSA/AC detectable warning products and directional surfaces shall be installed as provided in the CCR, Title 24, Part 1 Articles 2, 3 and 4. Refer to CCR, Title 24, Part 12, Chapter 12-11A and B for building and facilities access specifications for product approval for detectable warning products and directional surfaces.

> ***[For DSA/AC] NOTE:*** *Detectable warning products and directional surfaces installed after January 1, 2001, shall be evaluated by an independent entity, selected by the Department of General Services, Division of the State Architect, Access Compliance, for all occupancies, including transportation and other outdoor environments, except that when products and surfaces are for use in residential housing evaluation shall be in consultation with the Department of Housing and Community Development. See Government Code Section 4460.*

1117A.4.8 [For HCD 1/AC & DSA/AC] Obstructions. *Curb ramps shall be located or protected to prevent their obstruction by parked cars. Built-up curb ramps shall be located so that they do not project into vehicular traffic lanes.*

1117A.4.9 [For HCD 1/AC & DSA/AC] Diagonal curb ramps. *If diagonal (or corner-type) curb ramps have returned curbs or other well-defined edges, such edges shall be parallel to the direction of pedestrian flow. The bottom of diagonal curb ramps shall have 48 inches (1219 mm) minimum clear space as shown in the figures in Chapter 11B. If diagonal curb ramps are provided at marked crossings, the 48-inch (1219 mm) clear space shall be within the markings (see figures in Chapter 11B). If diagonal curb ramps have flared sides, they shall also have at least a 24-inch-long (610 mm) segment of straight curb located on each side of the curb ramp and within the marked crossing (see figures in Chapter 11B).*

SECTION 1118A [FOR HCD 1/AC & DSA/AC] – PARKING FACILITIES

1118A.1 [For HCD 1/AC & DSA/AC] Accessible Parking Required. *Accessible parking spaces shall be located on the shortest possible accessible route of travel to an accessible building entrance. In facilities with multiple accessible building entrances with adjacent parking, accessible parking spaces shall be dispersed and located near the accessible entrances. When practical, the accessible route of travel shall not cross lanes for vehicular traffic. When crossing vehicle traffic lanes is necessary, the route of travel shall be designated and marked as a crosswalk.*

Each lot or parking structure where parking is provided for clients, guests, employees or residents shall provide accessible parking as required by this section. In separate parking structures or lots that do not serve a particular building, parking spaces for physically disabled people shall be located on the shortest possible circulation route to an accessible pedestrian entrance of the parking facility.

If assigned parking is provided at covered multifamily building sites, designated accessible parking at the dwelling unit shall be provided on request of residents with physical disabilities on the same terms and with the full range of choices (e.g., surface parking or garage) provided for other residents, with accessible parking on a route accessible to wheelchairs for at least 2 percent of the covered dwelling units. Signage is not required. When visitor parking is provided, a minimum of 5 percent of the visitor parking shall provide access to grade-level entrances of multifamily dwellings and accessible parking at facilities (e.g., swimming pools) that serve accessible buildings. Visitor parking spaces shall be provided with signage as required by Section 1118A.5.

Such sign shall not be blocked from view by a vehicle parked in the space.

1118A.2 [For HCD 1/AC & DSA/AC] Parking Structures. *All entrances to and vertical clearances within parking structures shall have a minimum vertical clearance of 8 feet 2 inches (2489 mm) where required for accessibility to parking spaces for persons with physical disabilities.*

> ***EXCEPTION:*** *Private garages are exempt from the 8-foot 2-inch (2489 mm) minimum height requirement. Covered parking spaces and parking spaces in common areas shall provide a minimum of 8 feet 2 inches (2489 mm) vertical clearance.*

1118A.2.1 [For HCD 1/AC & DSA/AC] Passenger parking. *Passenger parking spaces shall not be considered to be passenger loading zones.*

1118A.3 [For HCD 1/AC & DSA/AC] Design and Construction. *When accessible parking spaces are required by this section, they shall be designed and constructed in accordance with the California Building Code, Title 24, Part 2, commencing with Section 1118A.*

1118A.4 [For HCD 1/AC & DSA/AC] Parking Space Size. *Parking spaces for persons with physical disabilities shall be located on the shortest possible route to an accessible entrance and shall be sized as follows:*

1118A.4.1 [For HCD 1/AC & DSA/AC] Single parking space size. *Where single spaces are provided, they shall be 14 feet (4267 mm) wide and outlined to provide a 9-foot (2743 mm) parking area and a 5-foot (1524 mm) loading and unloading access aisle on the passenger side of the vehicle. When more than one space is provided in lieu of providing a 14-foot-wide (4267 mm) space for each parking space, two spaces can be provided within a 23-foot-wide (7010 mm) area lined to provide a 9-foot (2743 mm) parking area on each side of a 5-foot (1524 mm) loading and unloading access aisle in the center. The minimum length of each parking space shall be 18 feet (5486 mm). The words NO PARKING shall be painted on the ground within each five-foot (1524 mm) loading and unloading access aisle. This notice shall be painted in white letters no less than 12-inches (154 mm) high and located so that it is visible to traffic enforcement officials. See Figure 11B-18B.*

1118A.4.2 [For HCD 1/AC & DSA/AC] Van parking. *One in every eight accessible spaces, but not less than one, shall be served by an access aisle 8-feet (2438 mm) wide minimum, placed on the side opposite the driver's side when the vehicle is going forward into the parking space and shall be designated van accessible as required by Section 1118A.4.1. All such spaces may be grouped on one level of a parking structure. The words NO PARKING shall be painted on the ground within each eight-foot (2438 mm) loading and unloading access aisle. This notice shall be painted in white letters no less than 12-inches (154 mm) high and located so that it is visible to traffic enforcement officials. See Figure 11B-18B.*

1118A.4.3 [For HCD 1/AC & DSA/AC] Arrangement of parking spaces. *In each parking area, a bumper or curb shall be provided and located to prevent encroachment of cars over the required width of walkways. Also, the space shall be so located that people with physical disabilities are not compelled to wheel or walk behind parked cars other than their own. Pedestrian ways which are accessible to people with physical disabilities shall be provided from each such parking space to related facilities, including curb cuts or ramps as needed. Ramps shall not encroach into any accessible parking space or the adjacent access aisle. The maximum cross slope in any direction of an accessible parking space and adjacent access aisle shall not exceed 2%. See Figures 11B-18A through 11B-18C.*

> ***EXCEPTION:*** *Parking spaces may be provided which would require a person with physical disabilities to wheel or walk behind other than accessible parking spaces when the enforcing agency determines that compliance with these regulations or providing equivalent facilitation would create an unreasonable hardship.*

1118A.4.4 [For HCD 1/AC & DSA/AC] Slope of parking spaces. *Surface slopes of accessible parking spaces shall be the minimum possible and shall not exceed ¼ inch (6 mm) per foot (2.083% gradient) in any direction.*

1118A.5 [For HCD 1/AC & DSA/AC] Signs. *Every parking space required by this section shall be identified by a sign, centered between 3 feet (914 mm) and 5 feet (1524 mm) above the parking surface, at the head of the parking space. The sign shall include the International Symbol of Accessibility and state RESERVED, or equivalent language.*

> ***NOTE:*** *For parking spaces at covered multifamily buildings, use Section 1118A.1.*

An additional sign shall also be posted in a conspicuous place at each entrance to off-street parking facilities or immediately adjacent to and visible from each stall or space. The sign shall not be less than 17 inches (432 mm) by 22 inches (559 mm) in size with lettering not less than 1 inch (25 mm) in height, which clearly and conspicuously states the following: Unauthorized vehicles parked in designated handicapped spaces not displaying distinguishing placards or license plates issued for physically disabled persons may be towed away at owner's expense. Towed vehicles may be reclaimed at ____ _____ or by telephoning _____.

In addition to the above requirements, the surface of each accessible parking space or stall shall have a surface identification duplicating either of the following schemes:

1. [For HCD 1/AC & DSA/AC] *By outlining or painting the stall or space in blue and outlining on the ground in the stall or space in white or suitable contrasting color a profile view depicting a wheelchair with occupant; or,*

2. [For HCD1/AC & DSA/AC] *By outlining a profile view of a wheelchair with occupant in white on blue background. The profile view shall be located so that it is visible to a traffic enforcement officer when a vehicle is properly parked in the space and shall be 36 inches high by 36 inches wide (914 mm by 914 mm).*

NOTE: *See figures in Chapter 11B.*

SECTION 1119A [FOR HCD 1/AC & DSA/AC] – REQUIREMENTS FOR ACCESSIBLE ROUTES IN COVERED BUILDINGS WITHOUT AN ELEVATOR

(Provisions below do not apply to multiple-story dwelling units in nonelevator buildings, i.e., townhouses.)

IF SINGLE BUILDING WITH COMMON (LOBBY) ENTRANCE Use only the following steps for determining required access to adaptable units:
1. *All ground-floor units in nonelevator buildings must be adaptable and on an accessible route to comply with the requirements unless an accessible route is not required as determined by Test No. 1, Individual Building Test, or Test No. 3, Unusual Characteristics Test as described below. Twenty percent of the ground-floor dwelling units that are not required to have an accessible route shall be adaptable. The remaining ground-floor dwelling units must comply with the features listed in Section 1119A.2 unless exempted by Test No. 3, Unusual Characteristics Test.* 2. *You may use Individual Building Test No. 1 only if site has terrain over 15 percent slope.* 3. *You may use Unusual Characteristics Test No. 3 if applicable. See the test.*
ALL OTHER SITES, INCLUDING SINGLE BUILDING WITH MULTIPLE ENTRANCES Use only the following steps for determining required access to adaptable units:
1. *All ground-floor units in nonelevator buildings must be adaptable and on an accessible route to comply with the requirements unless an accessible route is not required as determined by Test No. 1, Individual Building Test, or Test No. 2, Site Analysis Test, or Test No. 3, Unusual Characteristics Test as described below. A minimum of 20 percent of the ground- floor dwelling units are required to have an accessible route and shall be adaptable. The remaining ground-floor dwelling units must comply with the features listed in Section 1119A.2 unless exempted by Test No. 3, Unusual Characteristics Test.* 2. *Use Individual Building Test No. 1 only if site has terrain over 15 percent slope.* 3. *Use Site Analysis Test No. 2 only if site has terrain over 10 percent slope.* 4. *Use Unusual Characteristics Test No. 3 if applicable. See the test.*

Provisions to Test Nos. 1 and 2. *Where a building elevator is provided only as means of creating an accessible route to covered multifamily dwelling units on a ground floor, the building is not considered to be an elevator building for purposes of this code; hence, only the ground-floor dwelling units would be covered.*

TEST NO. 1 – INDIVIDUAL BUILDING TEST

It is not required by this code to provide an accessible route when the terrain of the site is such that both of the following apply:

1. *The slopes of the undisturbed site measured between the planned entrance and all vehicular or pedestrian arrival points within 50 feet (15 240 mm) of the planned entrance exceed 15 per- cent; and*

2. *The slopes of the planned finished grade measured between the entrance and all vehicular or pedestrian arrival points within 50 feet (15 240 mm) of the planned entrance also exceed 15 percent.*

   If there are no vehicular or pedestrian arrival points within 50 feet (15 240 mm) of the planned entrance, the slope for the purposes of Test No. 1 will be measured to the closest vehicular or pedestrian arrival point.

   For purposes of these requirements, vehicular or pedestrian arrival points include public or resident parking areas, public transportation stops, passenger loading zones, and public streets or sidewalks. To determine site impracticality, the slope would be measured at ground level from the point of the planned entrance on a straight line to (i) each vehicular or pedestrian arrival point that is within 50 feet (15 240 mm) of the planned entrance, or (ii) if there are no vehicular or pedestrian arrival points within the specified area, the vehicular or pedestrian arrival point closest to the planned entrance. In the case of sidewalks, the closest point to the entrance will be where a public sidewalk entering the site intersects with the walk to the entrance. In the case of resident parking areas, the closest point to the planned entrance will be measured from the entry point to the parking area that is located closest to the planned entrance.

TEST NO. 2 – SITE ANALYSIS TEST

For a site having multiple buildings, or a site with a single building with multiple entrances, it is not required to provide an accessible route under the following conditions:

1. *Calculate the percentage of the total buildable area of the undisturbed site with a natural grade less than 10 percent slope. The analysis of the existing slope (before grading) shall be done on a topographic survey with 2-foot (610 mm) contour intervals with slope determination made between each successive interval. The accuracy of the slope analysis shall be certified by a licensed engineer, landscape architect, architect or surveyor.*

2. *Determine the requirement of providing an accessible route to planned multifamily dwellings based on the topography of the existing natural terrain. The minimum percentage of ground-floor units required on an accessible route shall equal the percentage of the total buildable area (not restricted-use areas) of the undisturbed site with an existing natural grade of less than 10 percent slope.*

   3. In addition to the percentage established in paragraph (2), all ground-floor units in a building, or ground-floor units served by a particular entrance, shall be made accessible if the entrance to the units is on an accessible route with a slope between the planned entrance and a pedestrian or vehicular arrival point not exceeding 8.33 percent.

TEST NO. 3 – UNUSUAL CHARACTERISTICS TEST

Unusual characteristics include sites located in a federally designated floodplain or coastal high-hazard area and sites subject to other similar requirements of law or code that the lowest floor or the lowest structural member of the lowest floor must be raised to a specified level at or above the base flood elevation. An accessible route to a building entrance is impractical due to unusual characteristics of the site when:

1. *The original site characteristics result in a difference in finished grade elevation exceeding 30 inches (762 mm) and 10 percent measured between an entrance and all vehicular or pedestrian arrival points within 50 feet (15 240 mm) of the planned entrance; or*

2. *If there are no vehicular or pedestrian arrival points within 50 feet (15 240 mm) of the planned entrance, the unusual characteristics result in a difference in finished grade elevation exceeding 30 inches (762 mm) and 10 percent measured between an entrance and the closest vehicular or pedestrian arrival point.*

1119A.1 [For HCD 1/AC] General. *Each building on a building site shall be considered separately when determining applicability of this chapter.*

1119A.2 [For HCD 1/AC] Additional Requirements for Section 1119A.

NOTE: *The following section was relocated from Section 101.17.9 with modifications.*

All other ground-floor dwelling units in nonelevator buildings shall be made to comply with the following requirements:

1. *Grab bar reinforcement: see Section 1109A.*

2. *32-inch (813 mm) clear door interior opening width: see Section 1109A.*

3. *Lever hardware: see Section 1120A.2.*

4. *Door signal devices: see Section 1106A.*

5. *Clear space by doors: (Chapters 10 and 11A).*

6. *Minimum 15-inch (381 mm) water closet seat height: see Section 1109A.*

7. *Electrical receptacle outlet height: [Article 210-7 (g.1), California Electrical Code, Title 24, Part 3].*

8. *Lighting and environmental control height: [Article 380-8 (c.1), California Electrical Code, Title 24, Part 3].*

9. *Faucet controls: See Section 1112A.3.*

10. *Water closet, bathtub and lavatory minimum space requirements: see Section 1109A.*

11. *Removable cabinets under the kitchen sink counter area: see Section 1112A.*

SECTION 1120A – [FOR HCD 1/AC & DSA/AC] GENERAL ACCESSIBILITY FOR ENTRANCES, EXITS AND PATHS OF TRAVEL

NOTE: *In addition to provisions of this section, exits that provide access to, or egress from, buildings for persons with disabilities shall also comply with Chapter 10, Section 1001.1 and 1003.2.10 and* ***[for DSA/AC]*** *Chapter 11B, Section 1133B.*

1120A.1 [For HCD 1/AC & DSA/AC] Building Accessibility. *See Chapter 10, Sections 1001.1 and 1003.2.10.*

1120A.1.1 [For HCD 1/AC & DSA/AC] Primary entrances and exterior exit doors. *All primary entrances and exterior ground floor exit doors to buildings and facilities shall be made accessible to persons with disabilities.*

1120A.1.2 [For HCD 1/AC & DSA/AC] Temporary restrictions. *During periods of partial or restricted use of a building or facility, the entrances used for primary access shall be accessible to and usable by persons with disabilities.*

1120A.1.3 [ForHCD1/AC & DSA/AC] Recessed doormats. *Recessed doormats shall be adequately anchored to prevent interference with wheelchair traffic.*

1120A.2 [For HCD 1/AC & DSA/AC] Doors.

1120A.2.1 [For HCD 1/AC & DSA/AC] Type of lock or latch. *See Chapter 10, Section 1003.3.1.8.*

1120A.2.2 [For HCD 1/AC & DSA/AC] Width and height of doors. *Every required exit doorway shall be of a size as to permit the installation of a door not less than 3 feet (914 mm) in width and not less than 6 feet 8 inches (2032 mm) in height.*

When installed in exit doorways, exit doors shall be capable of opening at least 90 degrees and shall be so mounted that the clear width of the exitway is not less than 32 inches (813 mm). In computing the exit width required by Section 1003.2.3 the net dimensions of the exitway shall be used.

1120A.2.3 [For HCD 1/AC & DSA/AC] Hinged doors. *For hinged doors, the opening width shall be measured with the door positioned at an angle of 90 degrees from its closed position.*

1120A.2.3.1 [For HCD 1/AC & DSA/AC] Pairs of doors. *Where a pair of doors is utilized, at least one of the doors shall provide a clear, unobstructed opening width of 32 inches (813 mm) with the leaf positioned at an angle of 90 degrees from its closed position.*

1120A.2.3.2 [For HCD 1/AC & DSA/AC] Automatic doors. *When an automatic door operator is utilized to operate a pair of doors, at least one of the doors shall provide a clear, unobstructed opening width of 32 inches (813 mm) with the door positioned at an angle of 90 degrees from its closed position.*

> ***EXCEPTION:*** *The provisions of Section 1120A.2.3.2 shall not apply to existing buildings, except when otherwise required under conditions applicable to access for persons with disabilities. See Chapter 1 and Section 101.17.9.*
>
> ***[For DSA/AC] NOTE:*** *For all existing publicly funded buildings and facilities see Chapter 11B, Division IV.*

1120A.2.3.3 [For HCD 1/AC & DSA/AC] Revolving doors. *Revolving doors shall not be used as a required entrance for persons with disabilities.*

1120A.2.4 [For HCD 1/AC w/exceptions & DSA/AC] Thresholds. *The floor or landing shall not be more than ½ inch (12.7 mm) lower than the threshold of the doorway.*

Changes in level between ¼ inch (6 mm) and ½ inch (12.7mm) shall be beveled with a slope no greater than 1 unit vertical in 2 units horizontal (50% slope). Changes in level greater than ½ inch (12.7 mm) shall be accomplished by means of a ramp.

> ***EXCEPTIONS:***
> ***1.*** *Section 1120A.2.4 shall not be enforced retroactively.*
>
> ***2.*** *At the primary entry door to dwelling units in covered multifamily buildings, with direct exterior access, outside landing surfaces constructed of impervious materials such as concrete, brick or flagstone, shall be no more than ½ inch (12.7 mm) below the floor level of the interior of the dwelling unit immediately adjacent to the primary entry door.*
>
> ***3.*** *Changes in elevation in covered multifamily dwellings shall comply with this provision. Except as provided at the primary entrance, thresholds at exterior doors, including sliding door tracks, shall be no higher than ¾ inch (19 mm). Thresholds and changes in level at these locations shall be beveled with a slope no greater than 1 unit vertical in 2 units horizontal (50% slope).*
>
> ***4.*** *Exterior deck, patio or balcony surfaces shall be no more than 4 inches (102 mm) below the floor level of the interior of the dwelling unit. Change in level greater than ½ inch (12.7 mm) shall be accomplished by means of a ramp.*

1120A.2.4.1 [For HCD 1/AC & DSA/AC] Level floor or landing. *See Chapter 10, Section 1003.3.1.6.1.2.*

1120A.2.4.2 [For HCD 1/AC & DSA/AC] Maneuvering clearances at doors. *The floor or landing on each side of an exit door shall be level. The level area shall have a length in the direction of the door swing of at least 60 inches (1524 mm) and the length opposite the direction of the door swing of 44 inches (1118 mm) as measured at right angles to the plane of the door in its closed position.*

> ***EXCEPTIONS:***
> ***1.*** *In Group R Occupancies, the level area shall have a length both in the direction of door swing and opposite the direction of door swing of 44 inches (1118 mm) as measured at right angles to the plane of the door in its closed position.*
>
> ***2.*** *In buildings containing covered multifamily dwelling units, the floor or landing immediately outside the entry may be sloped up to 1/8 inch (3 mm) per foot (12 inches) (305 mm), in a direction away from the primary entrance of the dwelling unit for drainage.*
>
> ***3.*** *Interior passage door(s) in individual Group R, Division 3, and Group U Occupancies and within individual units of Group R, Division 1 Occupancies, such length need not exceed 36 inches (914 mm).*

1120A.2.4.3 [For HCD 1/AC & DSA/AC] *The width of the level area on the side to which the door swings shall extend 24 inches (610 mm) past the strike edge of the door for exterior doors and 18 inches (457 mm) past the strike edge for interior doors.*

> ***NOTES:***
> ***1.*** *Twenty-four inches (610 mm) is preferred for strike-side clearance.*
>
> ***2.*** *See Section 1109A.2 and Tables 1109A.2-1 and 1109A.2-2 for bathrooms that are required to be accessible.*

1120A.2.4.4 [For HCD 1/AC & DSA/AC] Space between consecutive doors. *The space between two consecutive door openings in a vestibule, serving other than a required exit stairway shall provide a minimum of 48 inches (1219 mm) of clear space from any door opening into such vestibule when the door is positioned at an angle of 90 degrees from its closed position. Doors in a series shall swing either in the same direction or away from the space between the doors.*

Where the door opens into a stair or smoke proof enclosure, the landing need not have a length of 60 inches (1524 mm).

1120A.2.4.5 [For HCD 1/AC & DSA/AC] Egress from door. *Every exit door required by this section shall give immediate access to an approved means of egress from the building.*

1120A.2.5 [For HCD 1/AC & DSA/AC] Closer-Effort to operate doors. *Maximum effort to operate doors shall not exceed 8-½ pounds (38 N) for exterior doors and 5 pounds (22 N) for interior doors, such pull or push effort being applied at right angles to hinged doors and at the center plane of sliding or folding doors. Compensating devices or automatic door operators may be utilized to meet the above standards. When fire doors are required, the maximum effort to operate the door may be increased to the minimum allowable by the appropriate administrative authority, not to exceed 15 pounds (66.7 N).*

1120A.2.5.1 [For HCD 1/AC & DSA/AC] Hand-activated door hardware. *Hand-activated door-opening hardware shall be centered between 30 inches (762 mm) and 44 inches (1118 mm) above the floor. Latching and locking doors that are hand-activated and that are in a path of travel shall be operable with a single effort by lever-type hardware, panic bars, push-pull activating bars, or other hardware designed to provide passage without requiring the ability to grasp the opening hardware. Locked exit doors shall operate consistent with Section 1120A.2.5, in egress direction.*

1120A.2.6 [For HCD 1/AC & DSA/AC] Smooth surface. *The bottom 10 inches (254 mm) of all doors except automatic and sliding shall have a smooth, uninterrupted surface to allow the door to be opened by a wheelchair footrest without creating a trap or hazardous condition. Where narrow frame doors are used, a 10 inch (254 mm) high smooth panel shall be installed on the push side of the door, which will allow the door to be opened by a wheelchair footrest without creating a trap or hazardous condition.*

1120A.3 [For HCD 1/AC & DSA/AC] Corridors and Exterior Exit Balconies.

1120A.3.1 [For HCD 1/AC & DSA/AC] Corridor widths. *Every corridor serving an occupant load of 10 or more shall not be less than 44 inches (1118 mm) in width. Corridors serving an occupant load of less than 10 shall not be less than 36 inches (914 mm) in width.*

1120A.3.2 [For HCD 1/AC & DSA/AC] Corridors over 200 feet (60960 mm). *Corridors that exceed 200 feet (60960 mm) in length shall:*

1. *Have minimum clear width of 60 inches (1524 mm); or*

2. *Have at a central location, a 60-inch by 60-inch (1524 mm by 1524 mm) minimum wheelchair turning space or passing alcove; or*

3. *Have at a central location, an intervening cross or tee corridor a minimum of 44 inches (1118 mm) in width; or*

4. *Have, at a central location, an operable door.*

EXCEPTION [For HCD 1/AC]: *All corridors within privately funded multifamily dwelling units shall be at least 36 inches (914 mm) wide.*

1120A.3.3 [For DSA/AC w/exception 2 & HCD 1/AC w/exceptions 1 & 2] Changes in elevation. *When a corridor or exterior exit balcony is on an accessible route of travel, changes in elevation of the floor shall be made by means of a ramp, except as provided for doors by Section 1003.3.4.*

EXCEPTIONS:
1. *Changes in elevation in covered multifamily dwellings shall comply with this provision. Except as provided at the primary entrance, thresholds at exterior doors, including sliding door tracks, shall be no higher than ¾ inch (19 mm). Thresholds and changes in level at these locations shall be beveled with a slope no greater than 1 unit vertical in 2 units horizontal (50% slope).*

2. Exterior deck, patio or balcony surfaces shall be no more than 4 inches (102 mm) below the floor level of the interior of the dwelling unit. Change in level greater than ½ inch (12.7 mm) shall be accomplished by means of a ramp.

1120A.4 [For HCD 1/AC & DSA/AC] Handrails.

1120A.4.1 [For HCD1/AC with Exceptions 1, 2, 3, 4 and 5] [For DSA/AC with exceptions 2 & 3] Required handrails. *Stairways shall have handrails on each side, and every stairway required to be more than 88 inches (2235 mm) in width shall be provided with not less than one intermediate handrail for each 88 inches (2235 mm) of required width. Intermediate handrails shall be located equidistant with the width of the stairway.*

EXCEPTIONS:
1. Stairways 44 inches (1118 mm) or less in width may have one handrail except that such stairways open on one or both sides shall have handrails provided on the open side or sides.

2. Stairways serving one individual dwelling unit in Group R, Division 1 or 3 Occupancies, may have one handrail, except that stairways open on one or both sides shall have handrails on the open side or sides.

3. Private stairways 30 inches (762 mm) or less in height may have handrails on one side only.

4. Stairways having three risers or less and stairways giving access to portable work stands less than 30 inches (762 mm) high are not required to have handrails.

5. Stairways less than 30 inches (762 mm) in width are permitted to have handrails on one side only.

1120A.4.2 [For HCD 1/AC & DSA/AC] Handrail Configuration.

1120A.4.2.1 [For HCD 1/AC & DSA/AC] Handrail heights. *Handrails shall be 34 to 38 inches (864 to 965 mm) above the nosing of the treads.*

1120A.4.2.2 [For HCD 1/AC & DSA/AC] *Handrails shall extend a minimum of 12 inches (305 mm) beyond the top nosing and 12 inches (305 mm), plus the tread width, beyond the bottom nosing.*

1120A.4.2.3 [For HCD 1/AC & DSA/AC] Handrail ends. *Ends shall be returned or shall terminate in newel posts or safety terminals.*

1120A.4.2.4 [For HCD 1/AC & DSA/AC] Handrail extensions.
Where the extension of the handrail in the direction of the stair run would create a hazard, the termination of the extension shall be made either rounded or returned smoothly to floor, wall or post. Where the stairs are continuous from landing to landing, the inner rail shall be continuous and need not extend out into the landing.

1120A.4.2.5 [For HCD1/AC & DSA/AC] Handrail projections.
Handrails projecting from a wall shall have a space of 1-½ inches (38 mm) between the wall and the handrail.

Handrails may be located in a recess if the recess is a maximum of 3 inches (76 mm) deep and extends at least 18 inches (457 mm) above the top of the rail. Handrails shall not rotate within their fittings.

1120A.4.2.6 [For HCD 1/AC & DSA/AC] Handrail grips. *The handgrip portion of handrails shall not be less than 1-¼ inches (32 mm) nor more than 1-½ inches (38 mm) in cross-sectional dimension or the shape shall provide an equivalent gripping surface. The handgrip portion of handrails shall have a smooth surface with no sharp corners. Any wall or other surface adjacent to the handrail shall be free of sharp or abrasive elements. Edges shall have a minimum radius of 1/8 inch (3 mm).*

EXCEPTIONS:
1. In covered multifamily dwellings, the diameter or width of the gripping surface of a handrail shall be 1-¼ inches (32 mm) to 1-½ inches (38 mm) or shaped to provide an equivalent gripping surface.

2. In covered multifamily dwellings, any wall or other surface adjacent to the handrail shall be free of any sharp or abrasive elements. Edges shall have a minimum radius of 1/8 inch (3 mm).

1120A.4.3 [For HCD1/AC & DSA/AC] Striping for the visually impaired.
The upper approach and the lower tread of each stair shall be marked by a strip of clearly contrasting color at least 2 inches (51 mm) wide placed parallel to, and not more than 1 inch (25 mm) from, the nose of the step or landing to alert the visually impaired. The strip shall be of material that is at least as slip resistant as the other treads of the stair.

Where stairways occur outside a building, the upper approach and all treads shall be marked by a strip of clearly contrasting color at least 2 inches (51 mm) wide and placed parallel to and not more than 1 inch (25 mm) from the nose of the step or landing to alert the visually impaired. The strip shall be of a material that is at least as slip resistant as the other treads of the stair. A painted strip shall be acceptable.

1120A.4.3.1 [For HCD 1/AC & DSA/AC] Treads. *All tread surfaces shall be slip-resistant. Treads shall have smooth, rounded or chamfered exposed edges, and no abrupt edges at the nosing (lower front edge).*

1120A.4.3.2 [For HCD 1/AC & DSA/AC] Nosing. *Nosing shall not project more than 1-½ inches (38 mm) past the face of the riser below.*

1120A.4.3.3 [For HCD1/AC & DSA/AC] Open risers. *Open risers are not permitted on stairways outside of the dwelling unit.*

In covered multifamily buildings, open risers are not permitted on accessible routes of travel.

1120A.5 [For HCD 1/AC & DSA/AC] Ramps.

1120A.5.1 [For HCD 1/AC & DSA/AC] Widths as for exits. *The width of ramps shall be as required for stairways and exits.*

1120A.5.2 [For HCD 1/AC & DSA/AC] Width. *The width of ramps shall be as required for stairways and exits.*

1120A.5.3 [For HCD 1/AC & DSA/AC] Primary entrance and special occupancy. *Pedestrian ramps serving primary entrances to buildings having an occupant load of 300 or more shall have a minimum clear width of 60 inches (1524 mm). Ramps serving Group R Occupancies may be 36 inches (914 mm) clear width when the occupant load is 50 or less. All other pedestrian ramps shall have a minimum width of 48 inches (1219 mm).*

1120A.5.4 [For HCD 1/AC & DSA/AC] Slope. *The maximum slope of a ramp that serves any exit way, provides access for persons with physical disabilities or is in the path of travel shall be 1-foot (305 mm) rise in 12 feet (3658 mm) of horizontal run.*

1120A.5.4.1 [For HCD1/AC & DSA/AC] Cross slope. *The cross slope of ramp surfaces shall be no greater than 1 unit vertical in 50 units horizontal (2% slope).*

1120A.5.4.2 [For HCD 1/AC] Outdoor ramps. *See Chapter 10, Section 1006.3.4.1.1.*

1120A.5.5 [For HCD 1/AC & DSA/AC] Landings. *Ramp landings shall be installed as follows:*

1120A.5.5.1 [For HCD 1/AC & DSA/AC] Location of landings. *Landings shall be provided at the top and bottom of each ramp. Intermediate landings shall be provided at intervals not exceeding 30 inches (762 mm) of vertical rise and at each change of direction. Landings are not considered in determining the maximum horizontal distance of each ramp.*

NOTE: *Examples of ramp dimensions are:*

SLOPE (Grading %)	MAXIMUM RISE (Inches)	MAXIMUM HORIZONTAL PROJECTION (Feet)
	(x 2.54 for mm)	(x 304.8 for mm)
1:12 (8.33%)	30	30
1:15 (6.67%)	30	37.5
1:16 (6.25 %)	30	40
1:20 (5.00 %)	30	50

1120A.5.5.2 [For HCD 1/AC w/exception & DSA/AC w/o exception] Size of top landings. *Top landings shall not be less than 60 inches (1524 mm) wide and shall have a length of not less than 60 inches (1524 mm) in the direction of ramp run.*

> ***EXCEPTION:*** *In covered multifamily buildings, the top landings shall not be less than 60 inches (1524 mm) wide and shall have a length of not less than 44 inches (1118 mm) in the direction of ramp run. The top landing width shall extend a minimum of 24 inches (610 mm) past the strike edge of the door.*

1120A.5.5.3 [For HCD 1/AC & DSA/AC] Encroachment of doors. *See Chapter 10, Section 1003.3.4.4.*

1120A.5.5.4 [For HCD1/AC & DSA/AC] Strike edge extension. *The width of the landing shall extend 24 inches (610 mm) past the strike edge of any door or gate for exterior ramps and 18 inches (457 mm) past the strike edge for interior ramps.*

1120A.5.5.5 [For HCD 1/AC & DSA/AC] Landing width. *At bottom and intermediate landings, the width shall be at least the same as required for the ramps.*

1120A.5.5.6 [For HCD 1/AC & DSA/AC] Change of direction. *Intermediate and bottom landings at a change of direction in excess of 30 degrees shall have a dimension in the direction of ramp run of not less than 72 inches (1829 mm) to accommodate the handrail extension.*

1120A.5.5.7 [For HCD 1/AC & DSA/AC] Other intermediate landings. *Other intermediate landings shall have a dimension in the direction of ramp run of not less than 60 inches (1524 mm).*

1120A.5.5.8 [For HCD 1/AC & DSA/AC] *For existing ramps or ramps not covered by Section 1003.3.4, landings shall be provided as set forth in Section *1003.3.4.*

1120A.5.5.9 [For HCD 1/AC & DSA/AC] Hazards. *Required ramps shall have a curb at least 2 inches (51 mm) high, or a wheel guide rail 2 to 4 inches (51 to 102 mm) high on each side of the ramp landing that has a vertical drop exceeding 4 inches (102 mm) and that is not bounded by a wall or fence.*

1120A.5.6 [For HCD 1/AC & DSA/AC w/exceptions 1, 2 and 3] Handrails. *Handrails are required on ramps that provide access if slope exceeds 1 foot rise in 20 feet of horizontal run (5% slope). Handrails shall be placed on each side of each ramp, shall be continuous the full length of the ramp, shall be 34 to 38 inches (864 to 965 mm) above the ramp surface, shall extend a minimum of 1 foot (305 mm) beyond the top and bottom of the ramp, and the ends shall be returned. Handrails projecting from a wall shall have a space of not less than 1-½ inches (38mm) between the wall and the handrail. Handrails may be located in a recess if the recess is a maximum of 3 inches (76 mm) deep and extends at least 18 inches (457 mm) above the top of the rail. The grip portion shall not be less than 1-¼ inches (32 mm) nor more than 1-½ inches (38 mm), or the shape shall provide an equivalent gripping surface and all surfaces shall be smooth with no sharp corners. Handrails shall not rotate within their fittings. Any wall or other surface adjacent to the handrail shall be free of sharp or abrasive elements. Edges shall have a minimum radius of 1/8 inch (3 mm).*

> ***EXCEPTIONS:***
> ***1.*** *Curb ramps do not require handrails.*
>
> ***2.*** *Covered multifamily buildings that are required to provide ramps for persons with physical disabilities shall have handrails if the slope exceeds 1 foot of rise in 20 feet of horizontal run (5% slope).*
>
> ***3.*** *Ramps that require handrails and that serve one individual dwelling unit in Group R, Division 1 or 3 Occupancies may have one handrail except that such ramps open on one or both sides shall have handrails provided on the open side or sides.*

1120A.5.7 [For HCD 1/AC, DSA/AC] Wheel guides. *Where the ramp surface is not bounded by a wall or fence and the ramp exceeds 10 feet (3048 mm) in length, the ramp shall comply with one of the following requirements:*

> ***1.*** *A guide curb a minimum of 2 inches (51 mm) in height shall be provided at each side of the ramp; or*
>
> ***2.*** *A wheel guide rail shall be provided, centered 3 inches (76 mm) plus or minus 1 inch (25 mm) above the surface or the ramp.*

---

* In 1120A.5.5.8 the cross-reference to Section 1003.3.4.4 (Landings) is incorrect. Reference should read 1003.3.4.4 for landings. This will be submitted for correction in Rulemaking.

1120A.5.8 [For HCD 1/AC & DSA/AC] Ramp heights. *Ramps more than 30 inches (762 mm) above the adjacent ground shall be provided with guardrails as required by Section 509, and handrails as required in Section 1003.3.4.5. Such guardrails shall be continuous from the top of the ramp to the bottom of the ramp.*

1120A.6 [For HCD 1/AC & DSA/AC] Walks and Sidewalks.

1120A.6.1 [For HCD 1/AC & DSA/AC] Continuous surface. *Walks and sidewalks subject to these regulations shall have a continuous common surface, not interrupted by steps or by abrupt changes in level exceeding ½ inch (12.7 mm) (see Section 1120A.6.3), and shall be a minimum of 48 inches (1219 mm) in width. Surfaces shall be slip-resistant as follows:*

> ***1. Slopes less than 6 percent.*** *Surfaces with a slope of less than 6 percent gradient shall be at least as slip-resistant as that described as a medium salted finish.*
>
> ***2. Slopes 6 percent or greater.*** *Surfaces with a slope of 6 percent gradient shall be slip-resistant.*
>
> ***3. Surface cross slopes.*** *Surface cross slopes shall not exceed ¼ inch (6 mm) per foot except when the enforcing agency finds that due to local conditions it creates an unreasonable hardship, the cross slope shall be increased to a maximum of ½ inch (12.7 mm) per foot for distances not to exceed 20 feet (6096 mm).*
>
> ***EXCEPTION:*** *Sidewalks serving individual dwelling units in privately covered multifamily buildings may be reduced to 36 inches (914 mm) in clear width. All other sidewalks shall be a minimum of 48 inches (1219 mm) in clear width.*

1120A.6.2 [For HCD 1/AC & DSA/AC] Gratings. *Walks, sidewalks and pedestrian ways shall be free of gratings whenever possible. For gratings located in the surface of any of these areas, grid openings in gratings shall be limited to ½ inch (12.7 mm) in the direction of traffic flow.*

> ***EXCEPTIONS:***
> ***1.*** *Where the enforcing agency determines that compliance with this section would create an unreasonable hardship, an exception may be granted when equivalent facilitation is provided.*
>
> ***2.*** *This section shall not apply in those conditions where, due to legal or physical constraints, the site of the project will not allow compliance with these building standards or equivalent facilitation without creating an unreasonable hardship. See Section 101.17.11, Item 4.*

1120A.6.3 [For HCD 1/AC & DSA/AC] Five percent gradient. *When the slope in the direction of travel of any walk exceeds 1 unit vertical in 20 units horizontal (5% slope), it shall comply with the provisions of Section 1120A.5, Ramps.*

1120A.6.4 [For HCD 1/AC] Changes in level.

1120A.6.4.1 [For HCD 1/AC] Abrupt changes. *Abrupt changes in level along any accessible route shall not exceed ½ inch (12.7 mm). When changes in level do occur, they shall be beveled with a slope no greater than 1 unit vertical in 2 units horizontal (50% slope), except that level changes not exceeding ¼ inch (6 mm) may be vertical. When changes in levels greater than ½ inch (12.7 mm) are necessary, they shall comply with the requirements for curb ramps.*

> ***NOTE:*** *See Section 1117A.4.*

1120A.6.5 [For HCD1/AC & DSA/AC] Level areas. *Walks shall be provided with a level area not less than 60 inches by 60 inches (1524 mm by 1524 mm) at a door or gate that swings toward the walk, and not less than 48 inches wide by 44 inches (1219 mm by 1118 mm) deep at a door or gate that swings away from the walk.*

Such walks shall extend 24 inches (610 mm) to the side of the strike edge of a door or gate that swings toward the walk. (For an example, see Figure 11B-26B.)

1120A.6.6 [For HCD 1/AC & DSA/AC] Walks with continuous gradients. *All walks with continuous gradients shall have level areas at least 5 feet (1524 mm) in length at intervals of at least every 400 feet (121 920 mm).*

1120A.7 [For HCD 1/AC & DSA/AC] Hazards.

1120A.7.1 [For HCD 1/AC & DSA/AC] Warning curbs. *Abrupt changes in level, except between a walk or sidewalk and an adjacent street or driveway, exceeding 4 inches (102 mm) in a vertical dimension, such as at planters or fountains located in or adjacent to walks, sidewalks or other pedestrian ways, shall be identified by curbs projecting at least 6 inches (152 mm) in height above the walk or sidewalk surface to warn the blind of a potential drop off.*

When a guardrail or handrail is provided, no curb is required when a guide rail is provided centered 3 inches (76 mm) plus or minus 1 inch (25 mm) above the surface of the walk or sidewalk, the walk is 5 percent or less gradient, or no adjacent hazard exists.

1120A.7.2 [For HCD 1/AC & DSA/AC] Overhanging obstructions. *Any obstruction that overhangs a pedestrian's way shall be a minimum of 80 inches (2032 mm) above the walking surface as measured from the bottom of the obstruction. Where a guy support is used parallel to a path of travel, including, but not limited to, sidewalks, a guy brace, sidewalk guy or similar device shall be used to prevent an overhanging obstruction as defined (see Figure 11B-28).*

Hazards such as drop-offs adjacent to walkways or overhanging obstructions can be dangerous to persons with vision problems. This section addresses these situations.

1120A.7.2.1 [For HCD 1/AC] Free-standing signs. *Whenever signs mounted on posts or pylons protrude from the posts or pylons and the bottom edge of the sign is below 80 inches (2032 mm) above the finished floor or ground level, the edges of such signs shall be rounded or eased, and the corners shall have a minimum radius of 0.125 inches.*

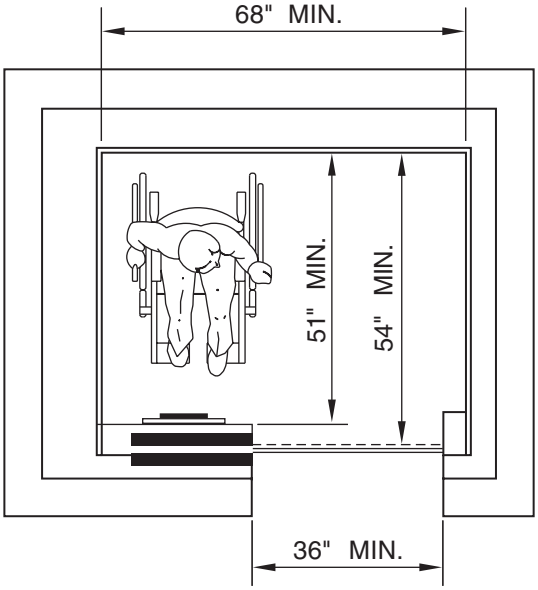

(a) SIDE OPENING DOOR

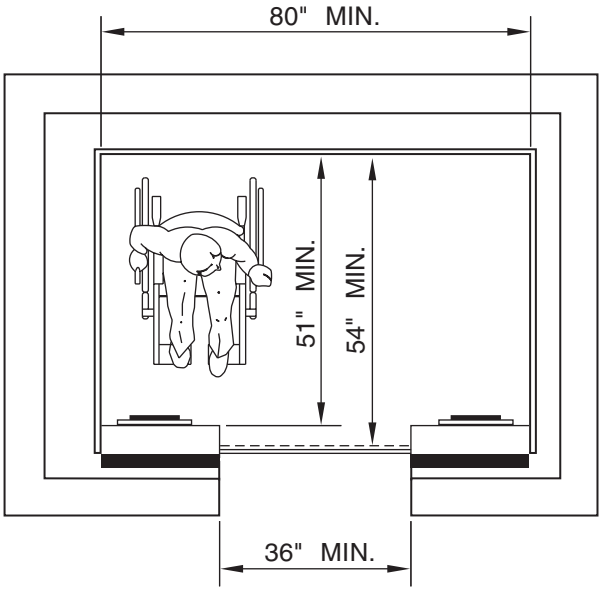

(b) CENTER OPENING DOOR

THIS DIAGRAM ILLUSTRATES THE SPECIFIC REQUIREMENTS OF THESE REGULATIONS AND IS INTENDED ONLY AS AN AID FOR BUILDING DESIGN AND CONSTRUCTION

FIGURE 11A-A—MINIMUM DIMENSIONS OF ELEVATOR CARS

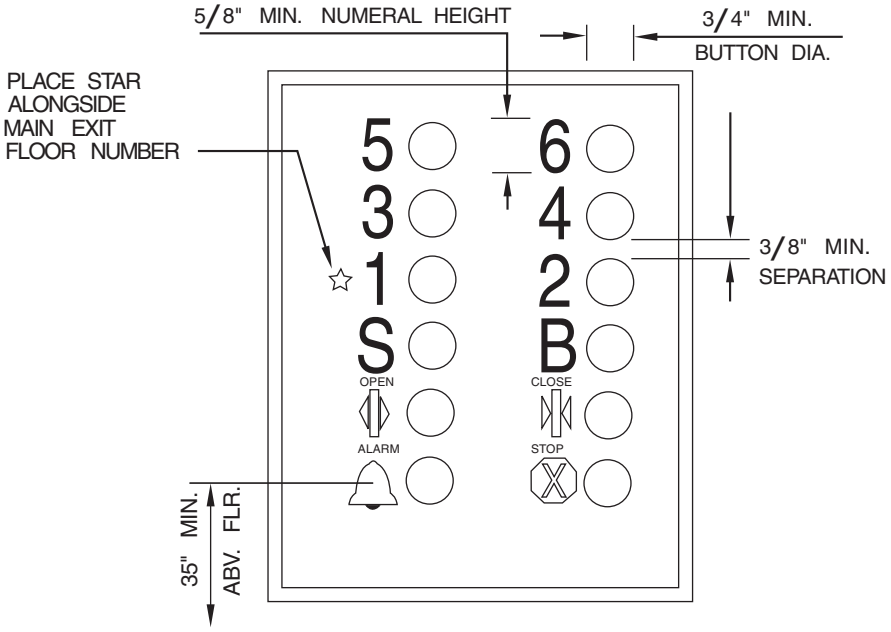

(a) ELEVATOR CONTROL PANEL DETAIL

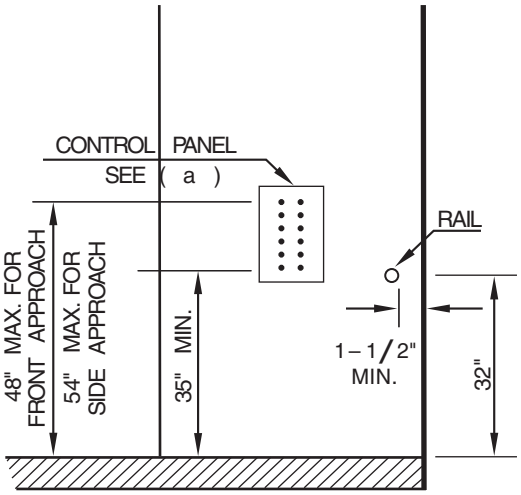

(b) MAXIMUM INSTALLATION HEIGHTS ABOVE CAB FLOOR

THIS DIAGRAM ILLUSTRATES THE SPECIFIC REQUIREMENTS OF THESE REGULATIONS AND IS INTENDED ONLY AS AN AID FOR BUILDING DESIGN AND CONSTRUCTION.

FIGURE 11A-B—ELEVATOR CONTROL PANEL

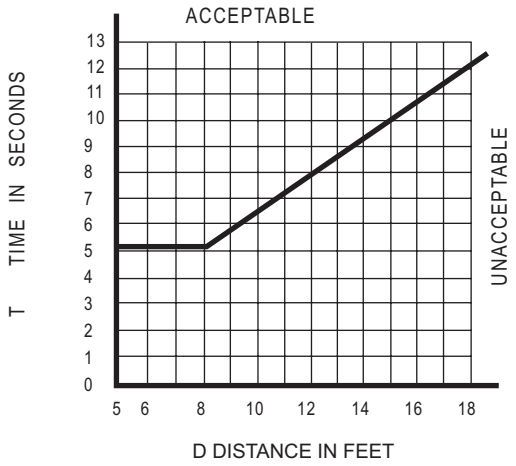

THIS DIAGRAM ILLUSTRATES THE SPECIFIC REQUIREMENTS OF THESE REGULATIONS AND IS INTENDED ONLY AS AN AID FOR BUILDING DESIGN AND CONSTRUCTION.

FIGURE 11A-C—GRAPH OF TIMING EQUATION

CHAPTER 11B [For DSA/AC]
ACCESSIBILITY TO PUBLIC BUILDINGS, PUBLIC ACCOMMODATIONS, COMMERCIAL BUILDINGS AND PUBLICLY FUNDED HOUSING

NOTE: *For housing accessibility, see Chapter 11A.*

Division I – NEW BUILDINGS

SECTION 1101B – SCOPE

See Chapter 1, Section 101.17.11.

1101B.1 General. *Buildings or portions of buildings shall be accessible to persons with disabilities as required by this chapter.*

1101B.2 Design. *The design and construction of accessible building elements shall be in accordance with this chapter and sections that are listed in Section 1114B.1.1.*

1101B.3 Maintenance of Accessible Features.

1. *A public accommodation shall maintain in operable working condition those features of facilities and equipment that are required to be accessible to and usable by persons with disabilities.*

2. *This section does not prohibit isolated or temporary interruptions in service or access due to maintenance or repairs.*

1101B.4 Dimensional Tolerances. *All dimensions are subject to conventional building industry tolerances for field conditions.*

SECTION 1102B – DEFINITIONS

For the purpose of the chapter, certain terms are defined as follows:

ACCESSIBILITY *is the combination of various elements in a building or area, which allows access, circulation and the full use of the building and facilities by persons with disabilities.*

ACCESSIBLE *is approachable and usable by persons with disabilities in compliance with this code.*

ACCESSIBLE ROUTE OF TRAVEL *is a continuous unobstructed path connecting all accessible elements and spaces in an accessible building or facility that can be negotiated by a person with a severe disability using a wheelchair and that is also safe for and usable by persons with other disabilities, and that is consistent with the definition of "path of travel" in Section 217.*

ADAPTABILITY *refers to the capability of spaces or facilities to be readily modified and made accessible.*

AREA FOR EVACUATION ASSISTANCE *is an accessible space which is protected from fire and smoke and which facilitates a delay in egress.*

AUTOMATIC DOOR *is a door equipped with a power operated mechanism and controls that open and close the door automatically upon receipt of a momentary actuating signal. The switch that begins the automatic cycle may be a photoelectric device, floor mat or manual switch.*

COMMONUSE AREAS *are public areas where the uses of the space is not limited exclusively to owners, residents or individual employees.*
CROSS SLOPE *is the slope that is perpendicular to the direction of travel.*

CURB CUT *is an interruption of a curb at a pedestrian way, which separates surfaces that are substantially at the same*

elevation.

CURB RAMP *is a sloping pedestrian way, intended for pedestrian traffic, which provides access between a walk or sidewalk to a surface located above or below an adjacent curb face.*

DETECTABLE WARNING *is a standardized surface or feature built into or applied to walking surfaces or other elements to warn visually impaired persons of hazards in the path of travel. Only approved DSA/AC detectable warning products and directional surfaces shall be installed as provided in the California Code of Regulations (CCR). Title 24, Part 1, Articles 2, 3 and 4. Refer to CCR Title 24, Part 12, Chapter 12-11A and B, for building and facility access specifications for product approval for detectable warning products and directional surfaces.*

> ***NOTE:*** *Detectable warning products and directional surfaces installed after January 1,2001, shall be evaluated by an independent entity, selected by the Department of General Services, Division of the State Architect-Access Compliance, for all occupancies, including transportation and other outdoor environments, except that when products and surfaces are for use in residential housing evaluation shall be in consultation with the Department of Housing and Community Development. See Government Code Section 4460.*

DWELLING UNIT *is a single unit of residence for a family of one or more persons. Examples of dwelling units covered by this chapter include condominiums, an apartment unit within an apartment building, and other types of dwellings in which sleeping accommodations are provided but toileting or cooking facilities are shared by occupants of more than one room or portion of the dwelling. Examples of the latter include dormitory rooms and sleeping accommodations in shelters intended for occupancy as residences for homeless persons.*

ELEVATOR, PASSENGER *is an elevator used primarily to carry passengers.*

EQUIVALENT FACILITATION *is an alternate means of complying with the literal requirements of these standards and specifications that provides access in terms of the purpose of these standards and specifications.*

> ***NOTES:***
> ***1.*** *See Section 101.2, Purpose.*
>
> ***2.*** *In determining equivalent facilitation, consideration shall be given to means that provide for the maximum independence of persons with disabilities while presenting the least risk of harm, injury or other hazard to such persons or others.*

FACILITY (or FACILITIES) *is a building, structure, room, site, complex or any portion thereof, that is built, altered, improved or developed to serve a particular purpose.*

GRAB BAR *is a bar for the purpose of being grasped by the hand for support.*

HANDRAIL *is a device to be used as a hand hold.*

INDEPENDENT ENTITY. *See Chapter 2, Section 210-I.*

> ***NOTE:*** *Detectable warning products and directional surfaces installed after January 1, 2001, shall be evaluated by an independent entity, selected by the Department of General Services, Division of the State Architect-Access Compliance, for all occupancies, including transportation and other outdoor environments, except that when products and surfaces are for use in residential housing evaluation shall be in consultation with the Department of Housing and Community Development. See Government Code Section 4460.*

INTERNATIONAL SYMBOL OF ACCESSIBILITY *is that symbol adopted by Rehabilitation International's 11th World Congress for the purpose of indicating that buildings and facilities are accessible to persons with disabilities. See Chapter 11B, Figure 11B-6.*

KICK PLATE *is an abrasion-resistant plate affixed to the bottom portion of a door to prevent a trap condition and protect its surface.*

LEVEL AREA *is a specified surface that does not have a slope in any direction exceeding 1/4 inch (6.4 mm) in 1 foot (305 mm) from the horizontal (2.083 percent gradient).*

****LIFT, SPECIAL ACCESS.*** *"See Special Access Lift."*

MARKED CROSSING *is a crosswalk or other identified path intended for pedestrian use in crossing a vehicular way.*

****NEWLY CONSTRUCTED*** *is a building that has never before been used or occupied for any purpose.*

NOSE, NOSING, *is that portion of a tread projecting beyond the face of the riser immediately below.*

OPEN RISER *is the air space between tread projecting beyond the face of the riser immediately below.*

PASSAGE DOOR *is a door other than an exit door through which persons may traverse.*

PEDESTRIAN *is an individual who moves in walking areas with or without the use of walking assistive devices such as crutches, leg braces, wheelchairs, etc.*

PEDESTRIAN RAMP *is a sloping path of travel intended for pedestrian traffic and as differentiated from a curb ramp.*

PEDESTRIAN WAY *is a route by which a pedestrian may pass.*

PRIMARY ENTRY LEVEL *is the floor or level of the building on which the primary entry is located.*

****PUBLIC USE AREA*** *means interior or exterior rooms or spaces of a building that are made available to the general public and does not include Common Use Areas as defined in Section 1102A.3-C. Public Use Areas may be provided at a building that is privately or publicly owned.*

RISER *is the vertical distance from the top of the tread to the top of the next higher tread.*

SLEEPING ACCOMMODATIONS *are rooms in which people may sleep; for example, dormitory and hotel or motel guest rooms or suites.*

SPECIAL ACCESS LIFT *is a hoisting and lowering mechanism equipped with a car or platform, or support that serves two landings of a building or structure and is designed to carry a passenger or passengers and (or) luggage or other material a vertical distance as may be allowed.*

STAIR RAILING *is a vertical barrier constructed along the open side or sides of stairways and as intermediate stair rails where required on wide stairways.*

TREAD *is the horizontal member of a step.*

TREAD DEPTH *is the horizontal distance from the front to back of tread, including nosing when used.*

TREAD RUN *is the horizontal distance from the leading edge of a tread to the leading edge of an adjacent tread.*

> ***NOTE:*** *For additional definitions pertinent to the Division of the State Architect/Access Compliance accessibility requirements, see Chapter 2.*

WALK *is a surfaced pedestrian way not located contiguous to a street used by the public. (See definition for "sidewalk".)*

> ***NOTE:*** *For additional definitions pertinent to the Division of the State Architect-Access Compliance accessibility requirements, see Chapter 2.*

SECTION 1103B – BUILDING ACCESSIBILITY

---

* The definitions of Lift, Special Access, Newly Constructed, and Public Use Area were erroneously left out of Chapter 11B. This will be submitted for correction in Rulemaking.

1103B.1 General. *Accessibility to buildings or portions of buildings shall be provided for all occupancy classifications except as modified or enhanced by this chapter. Occupancy requirements in this chapter may modify general requirements, but never to the exclusion of them. Multistory buildings must provide access by ramp or elevator.*

In new construction of buildings and only where elevators are required, pursuant to Section 1103B.1, and which exceed 10,000 square feet on any floor, an accessible means of vertical access via ramp, elevator or lift shall be provided within 200 feet of travel of each stairs and each escalator. In existing buildings that exceed 10,000 square feet on any floor and in which elevators are otherwise required pursuant to Section 1103B.1, whenever a newly constructed means of vertical access is provided via stairs or an escalator, an accessible means of vertical access via ramp, elevator or lift shall be provided within 200 feet of travel of each new stairs or escalator.

EXCEPTIONS:
1. *This section shall not apply with respect to stairs used solely for emergency egress.*

2. *Floors or portions of floors not customarily occupied, including, but not limited to, nonoccupiable or employee spaces accessed only by ladders, catwalks, crawl spaces, very narrow passageways or freight (nonpasssenger) elevators, and frequented only by service personnel for repair or maintenance purposes: such spaces as elevator pits and elevator penthouses, piping and equipment catwalks and machinery rooms. Stair stripping shall be required on stairs.*

3. *The following types of privately funded multistory buildings do not require a ramp or elevator above and below the first floor:*

3.1 *Multistoried office buildings (other than the professional office of a health care provider) and passenger vehicle service stations less than three stories high or less than 3,000 square feet (279 m2) per story.*

3.2 *Any other privately funded multistoried building that is not a shopping center, shopping mall or the professional office of a health care provider, and that is less than three stories high or less than 3,000 square feet (279 m2) per story if a reasonable portion of all facilities and accommodations normally sought and used by the public in such a building are accessible to and usable by persons with disabilities.*

SECTION 1104B – ACCESSIBILITY FOR GROUP A OCCUPANCIES

1104B.1 General. *All Group A Occupancies shall be accessible as provided in this chapter. See also the general requirements listed in Section 1114B.1.1.*

1104B.2 Assistive-listening Systems in Assembly Areas. *Assembly areas, conference and meeting rooms shall provide assistive-listening systems for persons with hearing impairments as provided in this section.*

EXCEPTION: *This section does not apply to systems used exclusively for paging, or background music, or a combination of these two uses.*

1. Number of personal receivers required. *The minimum number of receivers to be provided shall be equal to 4 percent of the total number of seats, but in no case less than two.*

2. Types of listening systems. *Types of assistive-listening systems include, but are not limited to, audio-induction loops, radio frequency systems (AM or FM) and infrared transmission.*

3. Location. *If the assistive-listening system provided is limited to specific areas or seats, then such areas or seats shall be within a 50-foot (15 240 mm) viewing distance of the performing area.*

4. Signage. *A sign shall be posted in a prominent place indicating the availability of assistive-listening devices. The sign shall include the international symbol of access for hearing loss and wording that states "Assistive-listening System Available". See Figure 11B-14.*

5. Fees and charges. *Nothing in this section shall preclude a facility charging for such assistive-listening system its usual fee for audiovisual equipment. However, no surcharge may be placed directly on any particular individual with a disability or any group of individuals with disabilities to cover the costs of such equipment.*

6. Portable systems. *If portable assistive-listening systems are used for conference or meeting rooms, the system may serve more than one room. However, permanently installed assistive-listening systems are required in areas if (1) they*

accommodate at least 50 persons or if they have audio-amplification systems, and (2) they have fixed seating.

1104B.3 Auditoriums, Assembly Halls, Theaters and Related Facilities.

1104B.3.1 Seating. *In all assembly places where seating is provided, there shall be spaces for persons using wheelchairs and semi ambulant persons, as provided in this section.*

> ***EXCEPTIONS:***
> ***1.*** *In existing buildings and facilities when the enforcing agency determines that compliance with the seating requirements of this code would create an unreasonable hardship, such requirements shall not apply. When the unreasonable hardship finding is applied, at least 1 percent of the total seating provided shall be accessible to and usable by persons with disabilities who use wheelchairs and such seating shall comply with the level requirements and the individual space requirements of this code.*
>
> ***2.*** *When an existing theater is subdivided into more than one facility having upper levels not accessible by ramp or elevator, and the enforcing agency determines that full compliance with this code would create an unreasonable hardship, such upper levels need not be made accessible, provided all facilities at grade are accessible and any event, showing of motion pictures or other activities made available to the public in all of the facilities are scheduled to ensure that all such functions are available to the public in the accessible facility.*

1104B.3.2 Accessibility to key facilities. *Seating for persons with disabilities shall be accessible from the main lobby or from a primary entrance, together with related toilet facilities.*

1104B.3.3 Variety of locations. *Accessible seating or accommodations in places of public amusement and resort, including theaters, concert halls and stadiums, but not including hotels and motels, shall be provided in a variety of locations so as to provide persons with disabilities a choice of admission prices otherwise available to members of the general public.*

1104B.3.4 Wheelchair spaces.

1. *The number of such spaces is as shown in Table 11B-1.*

TABLE 11B-1 – WHEELCHAIR SEATING SPACES

SEATING CAPACITY	NO. OF WHEELCHAIR SEATING SPACES
4 to 26	1
27 to 50	2
51 to 300	4
301 to 500	6

In addition, 1 percent, but not less than one, of all fixed seats, shall be aisle seats with no armrests on the aisle side, or removable or folding armrests on the aisle side. Each such seat shall be identified by a sign or marker. Signage notifying patrons of the availability of such seats shall be posted at the ticket office.

2. *When the seating capacity exceeds 500, one additional wheelchair seating space shall be provided for each total seating capacity increase of 100.*

3. *The ground or floor at spaces shall be level and shall comply with Section 1124B.*

1104B.3.5 Placement of wheelchair locations. *Wheelchair areas shall be an integral part of any fixed seating plan, and shall be arranged so as to provide persons with disabilities a choice of admission prices and lines of sight comparable to those for members of the general public. Each wheelchair area shall adjoin an accessible route which shall also serve as a means of egress in case of emergency. At least one companion fixed seat shall be provided next to each wheelchair seating area. When the seating capacity exceeds 300, wheelchair spaces shall be provided in more than one location in addition to complying with Section 1104B.3.3.*

EXCEPTION: *Accessible viewing positions where seating capacity is less than 300 may be clustered for bleachers, balconies and other areas having sight lines that require slopes of greater than 5 percent. Equivalent accessible viewing positions may be located on levels having accessible egress.*

1104B.3.6 Size of wheelchair location. *Each wheelchair location shall provide minimum clear floor or ground space as shown in Figure 11B-15, and shall adjoin an egress aisle on at least one side.*

1104B.3.7 Removable seats. *Readily removable seats may be installed in these wheelchair spaces when such spaces are not required to accommodate wheelchair users.*

1104B.3.8 Seating for semi ambulant individuals. *In addition to spaces provided for wheelchair users as noted in Sections 1104B.3.4 through 1104B.3.7 above, there shall be provided seating for semi ambulant individuals. The number of such seating shall be equal to at least 1 percent of the total seating and shall be no fewer than two. Such seats shall provide at least 24 inches (610*
mm) clear leg space between the front of the seat to the nearest obstruction or to the back of the seat immediately in front.

1104B.3.9 Life safety. *In determining the location of seating for persons with disabilities, life safety shall be considered, and all seating provided must comply with the fire and panic safety requirements of the state fire marshal.*

1104B.3.10 Access to performing areas. *An accessible route shall connect wheelchair seating locations with performing areas, including stages, arena floors, dressing rooms, locker rooms and other spaces used by performers.*

1104B.3.11 Stages, enclosed and unenclosed platforms, and orchestra pits. *Stages, enclosed and unenclosed platforms, and orchestra pits shall be made accessible to persons with disabilities.*

EXCEPTIONS:
1. *When the enforcing agency finds that requiring compliance with this code, for an enclosed or unenclosed platform or depressed area not more than 24 inches (610 mm) above or below an adjacent accessible level, would create an unreasonable hardship, the enclosed and unenclosed platform or depressed area shall be made accessible by a portable ramp with a slope not exceeding 1 unit vertical to 12 units horizontal (8.33% slope).*

2. *In existing buildings and facilities, all stages, enclosed or unenclosed platforms, and orchestra pits need not be accessible when the enforcing agency determines that compliance with this code would create an unreasonable hardship.*

1104B.3.12 Ticket booths. *Customer and employee sides of ticket booths and of concession and refreshment sales facilities shall be made accessible to persons with disabilities.*

1104B.3.13 Miscellaneous areas. *Public toilets and other public areas shall be made accessible to persons with disabilities.*

1104B.4 Stadiums, Grandstands, Bleachers, Athletic Pavilions, Gymnasiums and Miscellaneous Sport-related Facilities.

1104B.4.1 Spectator seating. *Spectator seating shall comply with Section 1104B.3.*

1104B.4.2 Ticket booth. *The customer side of a ticket booth shall be, and the employee side may be, accessible.*

1104B.4.3 Participation areas. *Participation areas shall be accessible to persons with disabilities, including the following listed and similar activity areas:*

1. *Tennis, racquetball and handball courts.*

2. *Gymnasium floor areas and general exercise rooms.*

3. *Basketball, volleyball and badminton courts, and bowling lanes.*

4. *Swimming pool deck areas must be accessible, and a mechanism to assist persons with disabilities in gaining entry into the pool and in exiting from the pool shall be provided. Such a mechanism may consist of a swimming pool lift device as long as the device meets all of the following criteria:*

4.1 *Have a seat that meets all of the following:*

4.1.1 *The seat must be rigid;*

4.1.2 *The seat must be not less than 17 inches (423 mm) and not more than 19 inches (483 mm), inclusive of any cushioned surface that might be provided, above the pool deck;*

4.1.3 *The seat must have two armrests. The armrest on the side of the seat by which access is gained shall be either removable or fold clear of the seat;*

4.1.4 *The seat must have a back support that is at least 12 inches (305 mm) tall;*

4.1.5 *The seat must have an occupant restraint for use by the occupant of the seat, and the restraint must meet the standards for operable controls in compliance with Section *1117B.6-4.*

4.2 *Be capable of unassisted operation from both the deck and water levels.*

4.3 *Be stable and not permit unintended movement when a person is getting into or out of the seat.*

4.4 *Be designed to have a live-load capacity of not less than 300 pounds.*

4.5 *Be positioned so that, if the pool has water of different depths, it will place the operator into water that is at least three feet (914 mm) deep.*

4.6 *Lower the operator at least 18 inches (457 mm) below the surface of the water.*

5. *Athletic team rooms and facilities, playing fields and running tracks.*

1104B.4.4 Clubrooms. *Clubrooms shall be made accessible to persons with disabilities.*

1104B.4.5 Sanitary and locker facilities. *Where spectator and/or participant sanitary and/or locker facilities are provided, they shall conform with the requirements in Sections 1115B and 1116B.*

EXCEPTIONS:
1. *Where the enforcing agency determines that compliance with these regulations would create an unreasonable hardship, an exception may be granted when equivalent facilitation is provided through the use of other methods or materials.*

2. *In existing buildings, when the enforcing agency finds that compliance with regulations would create an unreasonable hardship, an exception may be granted when all of the following minimum conditions are met:*

2.1 When *the total seating does not exceed 5,000 at least 1 percent of such seating shall be accessible to and usable by persons with disabilities. When the total seating provided exceeds 5,000, one additional seat for each 2,000 seats provided over 5,000 shall be accessible to and usable by persons with disabilities.*

2.2 *Sanitary facilities, ticket booths, clubrooms, concessions and refreshment facilities be accessible.*

2.3 *One of each type of participation area is usable and accessible.*

1104B.5 Dining, Banquet and Bar Facilities.

1. General. *Dining, banquet, and bar facilities shall be made accessible to persons with disabilities as provided in this section.*

EXCEPTIONS:
1. *In existing buildings, when the enforcing agency determines that compliance with any regulation under this section would create an unreasonable hardship, an exception shall be granted when equivalent facilitation is provided.*

2. *In existing buildings, these regulations shall not apply when legal or physical constraints would not allow compliance with these regulations*

* In 1104B.4.3 (Participation areas) Items 4.1.5 the cross-reference to 1117B.6-4 is incorrect. Cross-reference should read 1117B.6 with Items 1-4. This will be submitted for correction in Rulemaking.

*or equivalent facilitation without creating an unreasonable hardship. See Section 101.17.11,*Item 4.*

2. Entrance. *Access to these facilities shall be provided at entrances and exits a required by Section 1133B.1.1.*

3. Functional activity. *Wheelchair access shall be provided to all areas where each type of functional activity occurs.*

4. Seating. *Each dining, banquet and bar area shall have one wheelchair seating space for each 20 seats, with at least one minimum wheelchair seating space per functional area. Such seating shall be designed and arranged to permit use by wheelchair occupants, and shall comply with Section 1122B, "Fixed or Built-in Seating, Tables, and Counters." Access to such seating spaces shall be provided with main aisles not less than 36 inches (914 mm) clear width. Accessible seating spaces shall be integrated with general seating to allow a reasonable selection of seating area and to avoid having one area specifically highlighted as the area for persons with disabilities. The ratio of accessible seating is based on the total number of seats provided.*

5. Food service aisles. *Food service aisles shall be a minimum of 36 inches (914 mm) of clear width with a preferred width of 42 inches (1067 mm) where passage of stopped wheelchairs by pedestrians is desired. Tray slides shall be mounted no higher than 34 inches (864 mm) above the floor. If self-service shelves are provided, a reasonable portion must be within the ranges shown in Figure 11B-16.*

6. Tableware areas. *Tableware, dishware, condiments, food and beverage display shelves, and dispensing devices shall comply with Section 1122B.4. See Figure 11B-17.*

7. Restrooms. *Restrooms and powder rooms shall conform to requirements in Section 1115B.*

8. Food preparation areas. *Access to food preparation areas shall comply with the provisions for entrance doors and doorways in Section **1004, and aisles in Sections 1004.3.2.1 and 1004.3.2.2.*

1104B.6 Religious Facilities.

1104B.6.1 General. *Religious facilities shall be made accessible to persons with disabilities as provided in this section.*

> ***EXCEPTION:*** *In existing buildings, when the enforcing agency determines that compliance with any regulation under this section would create an unreasonable hardship, an exception shall be granted when equivalent facilitation is provided.*

1104B.6.2 Sanctuary. *Sanctuary areas shall be made accessible to persons with disabilities.*

1104B.6.2.1 Wheelchair *seating spaces in these areas shall conform to the requirements in Section 1104B.3.1.*

1104B.6.2.2 *Wheelchair access shall be provided to raised platforms, choir rooms, choir lofts, performing areas and other similar areas.*

> ***EXCEPTION:*** *In existing buildings, these regulations shall not apply to choir lofts when the enforcing agency determines that such compliance would create an unreasonable hardship.*

1104B.6.3 Assembly areas. *Assembly areas shall be made accessible to persons with disabilities. Enclosed and unenclosed platforms and stages in assembly areas shall conform to these requirements.*

1104B.6.4 Classrooms and offices. *Classrooms and offices shall have entry doors that conform to the requirements in Chapter 10.*

1104B.6.5 Sanitary facilities. *Sanitary facilities shall conform to the requirements in Section 1115B.*

SECTION 1105B – ACCESSIBILITY FOR GROUP B OCCUPANCIES

---

*In 1104B.5 (Dining, Banquet and Bar Facilities) #1 (General) Exception 2 cross-reference to Section 101.17.11, Item 4 is incorrect. Cross-reference should read Item 5.

** In 1104B.5 (Dining, Banquet and Bar Facilities) #8 (Food preparation areas) cross-references to 1004, 1004.3.2.1, and 1004.3.2.2 are incorrect. Cross-references should read "… doorways in Section 1133B.2.2, and aisles in Sections 1133B.6 and 1133B.7." Footnotes will be submitted for correction in Rulemaking.

Group B Occupancies shall be accessible as provided in this chapter. See also the general requirements listed in Section 1114B.1.1.

EXCEPTIONS:
1. *In existing buildings, when the enforcing agency determines that compliance with any regulation under this section would create an unreasonable hardship, an exception shall be granted when equivalent facilitation is provided.*

2. *In existing buildings, the provisions of this section shall not apply when legal or physical constraints will not allow compliance with these building standards or equivalent facilitation without creating an unreasonable hardship. See Section 101.17.11, *Item 4.*

3. *For floors and levels in new and existing buildings, see Section 1120B.*

1105B.1 General. *The provisions of this section apply to the specified types of facilities and identify specific requirements of accessibility and usability which shall be provided for each of the listed occupancy uses.*

1105B.2 Group B Occupancies. *Group B Occupancies used for assembly purposes, but having an occupant load of less than 50, shall conform to the requirements as specified in Sections 1105B, 1107B and 1110B.*

NOTE: *For floors and levels in dining, banquet and bar facilities, see Section 1120B.*

1105B.3 Office Buildings and Personal and Public Service Facilities. *Office buildings and personal and public service facilities shall conform to the provisions of this section.*

1105B.3.1 Facilities covered. *Facilities covered in this section are those that are used by the public as customers, clients, visitors or which are potentially places of employment and shall include, but not be limited to, the following requirements:*

1. *All types of general and specialized business professional offices, including those related to professional medicine or dentistry, insurance, real estate, attorneys, credit bureaus, consultants, counseling and accounting.*

2. *All types of sales establishments, including outlets for all general and special merchandise and equipment, including personal and household furnishings and supplies, foods, sporting equipment, office supplies, vehicles and related parts and supplies, building materials, and pet shops.*

3. *All personal and public service facilities, including banks, savings and loan companies, credit unions, newspaper and printing establishments, photographic studios, launder mats, cleaning and laundry outlets, veterinarian clinics and hospitals, automobile rental agencies, travel bureaus, public utility facilities, police stations and detention facilities, courtrooms and fire stations.*

1105B.3.2 Business and professional offices. *Areas to be made accessible include the following:*

1. *Client and visitor areas and office areas, together with related toilet rooms.*

2. *Conference rooms, counseling rooms or cubicles and similar areas.*

3. *Employee work areas shall have a minimum of 36 inches (914 mm) wide clear access, except as modified in other portions of these regulations. See Sections 1133B.6.1 and 1133B.6.2.*

4. *Professional medical and dental offices shall be made accessible and shall also comply with Section 1109B.*

1105B.3.3 Personal and public service facilities. *Areas to be made accessible include the following:*

1. *Client and visitor areas, office areas, and related toilet rooms shall be made accessible.*

2. *Employee work areas shall have 36 inches (914 mm) wide clear access, except as modified in other portions of these regulations. See Sections 1133B.6.1 and 1133B.6.2.*

3. *Automated teller machines used by a financial institution and its customers for the primary purposes of executing financial*

---

* In 1105B (Accessibility for Group B Occupancies) in Exception 2 cross-reference to Section 101.17.11, Item 4 is incorrect. Cross- reference should read Item 5. This will be submitted for correction in Rulemaking.

transactions. See Section 1117B.7.

1105B.3.4 Public utility facilities. *Areas to be made accessible include the following:*

1. *Office areas, meeting rooms and similar areas together with related toilet rooms shall be made accessible.*

2. *Public tour areas, to the extent that such public tours are conducted through or about a facility, or where the public is permitted to walk in such areas, shall provide accessibility in those portions of the facility and grounds where this occurs.*

> ***EXCEPTIONS:***
> ***1.*** *Facilities located in operational areas which would not have any reasonable availability to or usage by persons who use wheelchairs for mobility are not subject to the wheelchair accessibility requirements of these regulations.*
>
> ***2.*** *When the enforcing agency determines that compliance with this subsection would create an unreasonable hardship, an exception to such provision shall be granted when equivalent facilitation is provided.*
>
> ***3.*** *Visitor overlook facilities, orientation areas and similar public-use areas, and any sanitary facilities that serve these facilities shall be made accessible.*
>
> ***4.*** *Where public parking is provided, spaces shall be provided for persons with disabilities as specified in Sections 1129B and 1130B.*

1105B.3.5 Police department, law enforcement, fire department facilities and courtrooms. *Areas to be made accessible include the following:*

1. *Office areas, conference rooms, classrooms, dispatch rooms and similar areas, along with related sanitary facilities, shall be made accessible.*

2. *Detention-area visitor room shall be made accessible.*

3. *At least one detention cell facility with supporting sanitary facilities shall be made accessible.*

4. *Courtroom areas, including the judge's chambers and bench, counsel tables, jury box, witness stand and public seating area shall be made accessible.*

1105B.3.6 Miscellaneous general standards.

1. *Circulation aisles and pedestrian ways shall be sized according to functional requirements and in no case shall be less than 36 inches (914 mm) in clear width.*

2. Storage areas. *The doorway providing access to all such areas shall not be less than 32 inches (813 mm) in clear width. Storage areas shall be made accessible in the number and dimensions provided in Section 1125B.*

SECTION 1106B – ACCESSIBILITY FOR GROUP E OCCUPANCIES

1106B.1 General. *Group E Occupancies shall be accessible as provided in this chapter. See also the general requirements listed in Section 1114B.1.1.*

> ***EXCEPTIONS:***
> ***1.*** *In existing buildings, when the enforcing agency determines that compliance with any regulation under this section would create an unreasonable hardship, an exception shall be granted when equivalent facilitation is provided.*
>
> ***2.*** *In existing buildings, where the enforcing agency determines that, because of physical constraints, compliance with these regulations or equivalent facilitation would create an unreasonable hardship, these regulations shall not apply. See Section 101.17.11, *Item 4.*

1106B.2 Laboratory Rooms. *Laboratory rooms shall have at least one workstation and at least 5 percent of all workstations accessible to and usable by persons with disabilities.*

> ***EXCEPTION:*** *Where the enforcing agency determines that it would create an unreasonable hardship to require compliance with*

---

* In 1106B.1 (General) in Exception 2 cross-reference to "Section 101.17.11, Item 4" is incorrect. Cross-reference should read Item 5. This will be submitted for correction in Rulemaking.

these regulations for special-use rooms such as laboratory preparation rooms, supply rooms, small research laboratories, and areas containing specialized equipment not readily usable by persons with particular disabilities, such facilities need not comply with these regulations, except that a clear width of 32 inches (813 mm) shall be maintained into such rooms.

1106B.3 Teaching Facility Cubicles, Study Carrels, etc. *Teaching facility cubicles, study carrels, etc., shall have 5 percent, but always at least one cubicle or carrel in each group (language, dental, audiovisual, typing, drafting, darkrooms, etc.) made accessible to and usable by persons with disabilities in compliance with Section 1118B, "Space Allowance and Reach Ranges" and Section 1122B, "Fixed or Built-in Seating, Tables, and Counters."*

1106B.4 Library General Use Areas.

1. General. *Library general use areas such as those housing card files, book stacks, periodicals, reading and reference areas, information desks, circulation counters, etc., shall be made accessible to persons with disabilities.*

2. Open book stacks. *Open book stacks (those available for customer use) may be of normal height, and shall have main aisles no less than 44 inches (1118 mm) in width and side, range and end aisles no less than 36 inches (914 mm) in width.*

EXCEPTIONS:
1. *In existing buildings, shelving in the amount of not more than 15 percent of the total amount of library shelving may be located on an inaccessible mezzanine area.*

2. *In existing buildings, multitiered, closed book stacks (those restricted to employee use) are exempt from these accessibility standards.*

3. Height of book shelves. *Unless an attendant is available to assist persons with disabilities, all book shelving shall be located not more than 54 inches (1372 mm) above the floor.*

4. Card catalogs. *Reach heights at card catalogs and magazine displays shall comply with Section 1118B, with a height of 48 inches (1219 mm) preferred irrespective of reach allowed.*

SECTION 1107B – FACTORIES AND WAREHOUSES

*Factories and warehouses shall conform to the provisions of this section, Section 1103B.1 and Section 1103B.1, *Exception 2, for multistory buildings.*

EXCEPTION: *In existing buildings, when the enforcing agency determines that compliance with any regulation under this section would create an unreasonable hardship, an exception shall be granted when equivalent facilitation is provided.*

1107B.1 Factories.

1. *Major or principal floor areas shall be made accessible.*

2. *Office areas shall be made accessible.*

3. *Sanitary facilities serving these areas shall be made accessible.*

1107B.2 Warehouses.

1. *Miscellaneous warehousing areas which are located on the floor nearest grade and those areas on other floors that are otherwise provided with access by level entry, ramp or elevator shall be made accessible.*

2. *Office areas shall be made accessible.*

3. *Sanitary facilities serving these areas shall be made accessible.*

SECTION 1108B – ACCESSIBILITY FOR GROUP H OCCUPANCIES

1108B.1 General. *Group H Occupancies shall be accessible as provided in this chapter. See also the general requirements listed in Section 1114B.1.1.*

---

* In 1107B (Factories and Warehouses) cross-reference to "Section 1103B.1 Exception 2 is incorrect. Cross-reference should read Exception 3. This will be submitted for correction in Rulemaking.

EXCEPTIONS:
1. *In existing Group H Occupancies, when the enforcing agency determines that compliance with any regulation under this section would create an unreasonable hardship, an exception shall be granted when equivalent facilitation and protection are provided.*

2. *In existing Group H Occupancies, the provisions of this section shall not apply when legal or physical constraints prevent compliance with these building standards or the provisions of equivalent facilitation without creating an unreasonable hardship. See Section 101.17.11, *Item 4.*

1108B.2 Accessible Sanitation Facilities. *Accessible sanitation facilities in all Group H Occupancies shall be provided as specified in this chapter.*

1108B.3 Accessible Routes. *Entrances, stairs, ramps, doors, turnstiles, corridors, walks and sidewalks and hazards shall provide accessibility as specified in Section 1133B.*

1108B.4 Accessible Floors and Levels. *Accessible floors and levels shall comply with the requirements specified in this chapter.*

1108B.5 Employee Work Areas. *Employee work areas shall be accessible by means of a 36 inch-minimum (914 mm) aisle width and a 32 inch-minimum (813 mm) clear opening door width, as specified in Sections 1133B.6.1 and 1133B.6.2.*

1108B.6 *Accessible facilities covered in this chapter are those that are used by the public as customers, clients, visitors or which are potential places of employment.*

SECTION 1109B – ACCESSIBILITY FOR GROUP I OCCUPANCIES

1109B.1 General. *All Group I Occupancies shall be accessible as provided in this chapter. See also the general requirements listed in Section 1114B.1.1.*

EXCEPTION: *In existing buildings, when the enforcing agency determines that compliance with any regulation under this section would create an unreasonable hardship, an exception shall be granted when equivalent facilitation is provided.*

1109B.2 Entrance. *At least one accessible entrance shall be protected from the weather by canopy or roof overhang. Such entrances shall incorporate a passenger loading zone. Passenger loading zones shall provide an access aisle at least 60 inches (1524 mm) wide and 20 feet (6096 mm) long adjacent and parallel to the vehicle pull-up space. If there are curbs between the access aisle and the vehicle pull-up space, then a curb ramp complying with Chapter 11B shall be provided. Vehicle standing spaces and access aisles shall be level with surface slopes not exceeding 1 unit vertical in 50 units horizontal (2% slope) in all directions. Minimum vertical clearance of 114 inches (2896 mm) at accessible passenger loading zones and along vehicle access routes to such areas from site entrances shall be provided.*

EXCEPTION: *Clinics and other medical facilities that are not intended for patient stays of 24 hours or more, and that are located above the first story of a building, and that do not have a dedicated entrance from the exterior of the building at the first story.*

---

* In 1108B (Accessibility for Group H Occupancies) in Exception 2 cross-reference to Section 101.17.11, item 4 is incorrect. Cross-reference should read Item 5. This will be submitted for correction in Rulemaking.

1109B.3 Patient Bedrooms and Toilet Rooms. *Patient bedrooms and associated toilet facilities shall be made accessible as follows:*

1. *Long-term-care facilities, including skilled nursing facilities, intermediate care facilities, bed and care, and nursing homes shall have at least 50 percent of patient bedrooms and toilet rooms, and all public-use and common-use areas, accessible.*

2. *General-purpose hospitals, psychiatric facilities, and detoxification facilities shall have at least 10 percent of patient bedrooms and toilets, and all public-use and common-use areas, accessible.*

3. *Hospitals and rehabilitation facilities that specialize in treating conditions that affect mobility, or units within either that specialize in treating conditions that affect mobility, shall have all patient bedrooms and toilets and all public-use and common-use areas accessible.*

1109B.4 Patient Bedroom Areas. *Accessible patient bedrooms shall comply with the following requirements:*

1. *Each bedroom shall have a turning space measuring 60 inches (1524 mm) clear in diameter, or that is a T-shaped space complying with Figure 11B-12. In rooms with two beds, it is preferable that this space be located between beds.*

2. *Each bedroom shall have a minimum clear floor space of 36 inches (914 mm) along each side of the bed, and shall provide an accessible route to each side of the bed.*

3. *Each bedroom shall have an accessible door that complies with Section 1133B.2.*

1109B.5 Patient Toilet Rooms. *Patient toilet rooms required to be accessible shall comply with Section 1115B.*

1109B.6 Diagnostic and Treatment Areas. *Diagnostic and treatment areas and, where applicable, at least one dressing room, sanitary facility, etc., for each unit or suite, shall be made accessible.*

1109B.7 Waiting Areas, Offices and Sanitary Facilities. *Waiting areas, offices and sanitary facilities serving them shall be made accessible as covered in other portions of these standards.*

1109B.8 Office and Suites. *In buildings that house offices and suites of physicians, dentists, etc., all such offices or suites shall be made accessible, subject to other provisions of these regulations.*

SECTION 1110B – ACCESS FOR GROUP M OCCUPANCIES

1110B.1 Sales.

1110B.1.1 General areas. *General sales, display and office areas together with related toilet rooms shall be made accessible.*

1110B.1.2 Work areas. *Sales employee workstations shall be located on accessible levels, and the customer side of sales or check-out stations shall be accessible. Employee work areas shall be sized and arranged to provide access to employees in wheelchairs.*

1110B.1.3 Check stands. *In new construction, check stands, including service counters requiring a surface for transactions, shall be made accessible by providing a 36-inch (914 mm) aisle on the customer side of the check stand. Where quick check stands are provided, at least one shall be accessible. Where regular check stands are provided, the number of check stands that are accessible shall be as shown in Table 11B-2.*

TABLE 11B – 2-CHECKSTANDS

NUMBER OF REGULAR CHECKSTANDS	NUMBER TO BE ACCESSIBLE
1 to 4	*1*
5 to 8	*2*
9 to 15	*3*
over 15	*3 plus 20% of additional aisles*

In new and existing construction, accessible check stands shall provide a clear checkout aisle width of 36 inches (914 mm) with a maximum adjoining counter height not exceeding 38 inches (965 mm) above the finish floor. The top of the counter lip shall not exceed 40 inches (1016 mm) above the finish floor. Accessible check-stands shall always be open to customers with disabilities and shall be identified by a sign clearly visible to those in wheelchairs. The sign shall display the international symbol of accessibility in white on a blue background and shall state "This check stand to be open at all times for customers with disabilities".

In existing buildings, at least one checkout aisle shall be accessible in facilities with less than 5,000 square feet (465 m2) of selling space. In facilities of 5,000 square feet (465 m2) or more of selling space, at least one of each design of checkout aisle shall be made accessible when altered until the number of accessible checkout aisles of each design equals the number required in new construction.

> ***NOTE:*** *Examples of checkout aisles of different design include those which are specifically designed to serve different functions. Different design includes, but is not limited to, the following features: length of belt or no belt, or permanent signage designating the aisle as an express lane.*

1110B.1.4 Point-of-sale machines. *All point-of-sale machines used by customers for the primary purpose of executing transactions between the business entity and the customer shall comply with Section 1117B.7.*

1110B.1.5 Turnstiles. *See Section 1133B.2.3.4.*

1110B.1.6 Theft-prevention barriers. *Where shopping cart theft prevention barriers are used, they shall conform to the following requirements:*

1. *Each entrance and exit provided for public use shall be accessible to and usable by persons with disabilities.*

2. *Shopping cart barriers located at a public entrance or exit shall be designed to provide a clear, unobstructed opening at least 32 inches (813 mm) in width for ingress and egress of persons with disabilities.*

3. *Where gates are used, they shall open in the direction of travel, provide a clear unobstructed opening 32 inches (813 mm) in width and be maintained unlocked during business hours. Gates shall not operate a publicly audible alarm system or require more than 5 foot-pounds of force (22.2 N·m).*

4. *Where a clear unobstructed opening is provided, a level area is required on both sides of the clear opening or gate which extends a minimum of 44 inches (1118 mm) on each side of the opening and is at least 48 inches (1219 mm) in width.*

5. *Where a gate is used, the level area on both sides of the clear opening or gate shall be a minimum of 60 inches (1524 mm) in width and extend a minimum of 60 inches (1524 mm) (measured from the gate in a closed position) in the direction of the gate swing. The level area opposite the gate swing shall be a minimum of 48 inches (1219 mm) in width and extend a minimum of 42 inches (1067 mm).*

6. *Where a gate is used, the bottom of the gate shall be within 3 inches (76 mm) of the surface of the path of travel. The surface of the gate on each side shall be smooth to present no hazard to persons with disabilities using the gate and shall be structurally adequate to allow it to be opened with the wheelchair foot pedals.*

7. The path of travel to and through the clear opening or gate shall be designed to prevent barriers from obstructing it and shall be continuously maintained unobstructed during business hours. Also, the design shall specifically prevent parked vehicles from obstructing ingress and egress.

8. Interior and exterior pedestrian traffic barriers (posts, rails, turnstiles, etc.) shall allow unobstructed travel for persons with disabilities through a 32-inch (813 mm) clear opening.

1110B.1.7 Fitting and dressing rooms. *Where fitting or dressing rooms are provided for male or female customers, patients, employees, or the general public, 5 percent, but never less than one, of dressings rooms for each type of use in each cluster of dressing rooms shall be accessible.*

- *Entry doors shall conform to the requirements of Section 1133B.2 and aisles leading to such doors shall conform to Sections 1133B.6.1 and 1133B.6.2.*
- *The bottom of mirrors provided for use by persons with disabilities shall not be greater than 20 inches (508 mm) from the floor. Mirrors to be used by persons with disabilities shall be full-length, measuring at least 18 inches (457 mm) wide by 54 inches (1372 mm) high, and shall be mounted in a position affording a view to a person on the bench as well as to a person in a standing position.*
- *Clothing hooks shall be located not greater than 48 inches (1219 mm) from the floor.*
- *Every accessible dressing room shall have a 24-inch by 48-inch (610 mm by 1219 mm) bench fixed to the wall along the longer dimension. The bench shall be mounted 17 to 19 inches (432 to 483 mm) above the finish floor. Clear floor space shall be provided alongside the bench to allow a person using a wheelchair to make a parallel transfer onto the bench. The structural strength of the bench and attachments shall comply with Section 1115B.8. The minimum clear space within the room shall be 60 inches (1524 mm) in width and length. No door shall encroach into the required space.*

EXCEPTIONS:
1. *Minor specialized display areas that do not exceed 200 square feet (18.6 m2) in floor area and to which the general public is excluded need not be made accessible.*

2. *Offices in sales facilities that do not exceed 5,000 square feet (465 m2) in total area, that are located on nonaccessible levels, need not be made accessible.*

1110B.2 Miscellaneous General Standards.

1110B.2.1 Circulation. *Circulation aisles and pedestrian ways shall be sized according to functional requirements and in no case shall be less than 36 inches (914 mm) in clear width.*

1110B.2.2 Storage areas. *The doorway providing access to all such areas shall not be less than 32 inches (813 mm) in clear width. Storage areas shall be made accessible in the number and dimensions provided in Section 1125B.*

SECTION 1111B – ACCESSIBILITY FOR GROUP R OCCUPANCIES

1111B.1 General. *Group R Occupancies shall be accessible or adaptable as provided in this chapter. Public-use and common use areas serving adaptable guest and/or dwelling units shall be accessible. See also the general accessibility requirements as listed in Sections 1114B.1.1 and 1111B.*

EXCEPTION: *When the enforcing agency determines that compliance with any regulation under this section would create an unreasonable hardship, an exception shall be granted when equivalent facilitation is provided.*

1111B.2 Public and Common-use Rooms or Areas. *Public and common-use rooms and similar areas shall be made accessible to people with disabilities, subject to specific provisions contained in other portions of these regulations. See also general requirements listed in Section 1114B.1.1.*

1111B.3 Recreational Facilities. *When recreational facilities are provided, including swimming pools, they shall comply with Sections 1104B.4.3 and 1132B.2.*

1111B.4 Hotels, Motels, Inns, Dormitories, Resorts, Homeless Shelters, Halfway Houses, Transient Group Homes and Similar Places of Transient Lodging. *Hotels, motels, inns, dormitories, resorts, and similar places of transient lodging shall provide access for persons with disabilities in accordance with the provisions of the accessibility requirements of this California Building Code, except as herein provided.*

1111B.4.1 Available range of accommodations. *Accessible guest rooms or suites shall be dispersed among the various classes of sleeping accommodations to provide a range of options applicable to room sizes, costs, amenities provided, and the number of beds provided.*

1111B.4.2 Guest rooms and suites. *Places of transient lodging shall incorporate the accessibility requirements of this code as modified by this chapter in at least one guest room or dormitory room together with their sanitary facilities in conformance with Table 11B-3. All accessible sleeping rooms or suites required by Table 11B-3 shall comply with the requirements of Section 1111B.4 for hearing impaired guests.*

> ***EXCEPTION:*** *When guest rooms are being altered in an existing facility, or portion thereof, subject to the requirements of this section, at least one guest room or suite that complies with the accessibility requirements of this code as modified by this chapter shall be provided for each 25 guest rooms, or fraction thereof, of rooms being altered until the number of such rooms provided equals the number required to be accessible in Table 11B-3. In addition, at least one guest room or suite that complies with the requirements of Section 1111B.4.5 shall be provided for each 25 guest rooms, or fraction thereof, of rooms being altered until the number of such rooms equals the number required to be accessible in Table 11B-4.*

1111B.4.3 Access to beds. *Accessible sleeping rooms shall have a 36-inch (914 mm) clear width maneuvering space located along both sides of a bed, except that where two beds are provided, this requirement can be met by providing a 36-inch-wide (914 mm) maneuvering space located between the beds.*

In addition, there shall be a clear space under the bed for the use of a personal lift device. The clear space shall be on a long side of the bed adjacent to an accessible aisle. The clear space shall extend horizontally to points not more than 12 inches (305 mm) from each end of the bed, vertically not less than 7 inches (178 mm), and not less than 30 inches (762 mm) deep.

1111B.4.4 Kitchen facilities. *When accommodations are provided with kitchen units, accessible kitchens shall be provided to those accommodations required to be accessible in conformance with Table 11B-3, and shall meet the requirements of Section 1112A.*

1111B.4.5 Visual alarms, notification devices and telephones for persons with hearing impairments. *In addition to those accessible sleeping rooms and suites required by Section 1111B.4.2 to comply with this section, additional sleeping rooms and suites shall be provided with the following features in conformance with Table 11B-4 and as follows:*

1111B.4.5.1 Visual alarms. *Auxiliary visual alarms shall be provided and shall comply with Section 1114B.2.4.*

1111B.4.5.2 Visual notification devices. *Visual notification devices shall also be provided in units, sleeping rooms and suites to alert room occupants of incoming telephone calls and a door knock or bell. Notification devices shall not be connected to auxiliary visual alarm signal appliances.*

1111B.4.5.3 Telephones. *Permanently installed telephones shall have volume controls complying with Section 1117B.2.8; an accessible electrical outlet within 48 inches (1219 mm) of a telephone connection shall be provided to facilitate the use of a text telephone.*

1111B.4.6 Bathrooms in hotels, motels, inns, dormitories, resorts, homeless shelters, halfway houses, transient group homes and similar places of transient lodging. *Required accessible bathrooms for places of transient lodging shall comply with the following provisions:*

EXCEPTION: *Hotel and motel bathrooms beyond those specified in Section 1111B.4 need not comply with the provisions of this section or other accessibility provision of the California Building, Electrical, and Plumbing Codes if they provide the following features:*

1. *All bathroom fixtures are in a location that allows a person using a wheelchair measuring 30 inches by 48 inches (762 mm by 1219 mm) to touch the wheelchair to any lavatory, urinal, water closet, tub, sauna, shower stall and any other similar sanitary installation, if provided.*

2. *All bathroom entrance doors have a clear opening width of 32 inches (813 mm) and shall be either sliding doors or shall be hung to swing in the direction of egress from the bathroom.*

1. Doors. *Doors to accessible bathrooms shall comply with Section 1133B.2. Doors shall not swing into the floor space required for any fixture.*

2. Clear floor space. *All fixtures and controls shall be on an accessible route. There must be within the bathroom a clear floor space measuring 30 inches by 60 inches (762 mm by 1524 mm). The clear floor spaces at fixtures and controls, the accessible route, and the turning space may overlap.*

3. Water closets. *If a toilet stall is provided, it shall comply with Section 1115B.7.1 or 1115B.7.2, its water closet shall comply with Section 1115B of this code.*

4. Lavatory and mirrors. *If a lavatory and/or mirror is provided, it shall comply with Section 1115B.9 of this code.*

5. Controls and dispensers. *If controls, dispensers, receptacles, or other types of equipment are provided, then at least one of each shall be on an accessible route and shall comply with Section 1117B.6,"Controls and Operating Mechanisms."*

6. Bathing and shower facilities. *If tubs or showers are provided, then at least one accessible tub that complies with Section 1115B.6.1 or at least one accessible shower that complies with Section 1115B.6.2 of this code shall be provided.*

7. Toilet facilities. *Toilet facilities shall comply with Section 1111B.4.6, as modified for hotel, motel and dormitory accommodations.*

1111B.4.7 Dormitory rooms. *Dormitory rooms beyond those specified herein shall comply with the adaptability requirements of Section 1111B.5.*

1111B.5 Buildings and Complexes Containing Publicly Funded Dwelling Units.

1111B.5.1 General. *Buildings and complexes containing publicly funded dwelling units shall be accessible as required by Chapter 11A, Housing Accessibility, except that scoping requirements for covered multifamily dwellings include one or more publicly funded dwelling units, and is required to comply with Division IV. Accessibility for Existing Buildings, beginning with Section 1134B.*

*TABLE 11B-3. ADDITIONAL ACCESSIBILITY REQUIRED IN GUEST ROOMS OR SUITES**

TOTAL NUMBER OF ROOMS	FULLY ACCESSIBLE ROOMS	PLUS ADDITIONAL ACCESSIBLE ROOMS WITH ROLL-IN SHOWERS
1 to 25	0	1
26 to 50	1	1
51 to 75	3	1
76 to 100	4	1
101 to 150	5	2
151 to 200	6	2
201 to 300	7	3
301 to 400	8	4
401 to 500	9	4
501 to 1,000	2% of total	4 plus 1 for each additional 100 over 400
1,001 and over	20 plus 1 for each 100 over 1,000	

**Note: Provisions of this chapter are additional modifications to general requirements listed in Section 1114B.1.1.*

TABLE 11B-4. ADDITIONAL ACCESSIBILITY REQUIRED FOR HEARING IMPAIRED IN GUEST ROOMS*

TOTAL NUMBER OF ROOMS	NUMBER OF ROOMS EQUIPPED FOR HEARING IMPAIRED
1 to 25	*1*
26 to 50	*2*
51 to 75	*3*
76 to 104	*4*
101 to 150	*5*
151 to 200	*6*
201 to 300	*7*
301 to 400	*8*
401 to 500	*9*
501 to 1,000	*2% of total*
1,001 and over	*20 plus 1 for each 100 over 1,000*

**Note: Provisions of this chapter are additional modifications to general requirements listed in Section 1114B.1.1.*

SECTION 1112B – ACCESSIBILITY FOR GROUP S OCCUPANCIES

(Reserved for future use.)

SECTION 1113B – ACCESSIBILITY FOR GROUP U OCCUPANCIES

(Reserved for future use.)

SECTION 1114B – FACILITY ACCESSIBILITY

When buildings are required to be accessible, buildings and facilities shall be accessible as provided in this section and in those sections listed in Section 1114B.1.1.

1114B.1 Design and Construction.

1114B.1.1 General. *When accessibility is required by this chapter, it shall be designed and constructed to meet the minimum requirements of the following sections:*

Chapter 11B. Accessibility; Division I, New Buildings; Division II, Site Accessibility; Division III, Accessibility for Entrances, Exits and Paths of Travel; and Division IV, Accessibility for Existing Buildings

Entrances – ***[for HCD 1/AC] Section*** *1120A.1;* ***[for DSA/AC] Section ****1133B*

Doors – ***[for HCD 1/AC] Section*** *1120A.2;* ***[for DSA/AC] Section*** *1133B.2*

Corridors – ***[for HCD 1/AC] Section*** *1120A.3;* ***[for DSA/AC] Section*** *1133B.3*

Stairways – ***[for HCD 1/AC] Section*** *1120A.4;* ***[for DSA/AC] Section*** *1133B.4*

Ramps – ***[for HCD 1/AC] Section*** *1120A.5;* ***[for DSA/AC] Section*** *1133B.5*

Aisles – ***[for DSA/AC] Section*** *1133B.6*

Walks and Sidewalks – ***[for HCD 1/AC] Section ****1120A.7;* ***[for DSA/AC] Section*** *1133B.7*

Hazards – ***[for HCD 1/AC] Section*** *1120A.7;* ***[for DSA/AC] Section*** *1133B.8*

---

* In 1114B.1.1 (General) cross-reference in "Entrances" to Section 1133B is incorrect. Cross-reference should read 1133B.1.1.
** In 1114B.1.1 (General) cross-reference in "Walks and Sidewalks" to Section 1120A.7 is incorrect. Cross-reference should read 1120A.6.
Footnotes will be submitted for correction in Rulemaking.

Elevators – ***[for HCD 1/AC] Section*** *3003*

*Special *Wheelchair Lifts –* ***[for HCD 1/AC] Section*** *1110A.2;* ***[for DSA/AC] Section*** *1116B.2*

Alarms – Chapter 35.

See also Part 3, California Electrical Code.

1114B.1.2 Accessible route of travel. *When a building, or portion of a building, is required to be accessible or adaptable, an accessible route of travel shall be provided to all portions of the building, to accessible building entrances and between the building and the public way. Except within an individual dwelling unit, an accessible route of travel shall not pass though kitchens, storage rooms, restrooms, closets or other spaces used for similar purposes. At least one accessible route within the boundary of the site shall be provided from public transportation stops, accessible parking and accessible passenger loading zones, and public streets or sidewalks, to the accessible building entrance they serve. The accessible route shall, to the maximum extent feasible, coincide with the route for the general public. At least one accessible route shall connect accessible buildings, facilities, elements and spaces that are on the same site.*

At least one accessible route shall connect accessible building or facility entrances with all accessible spaces and elements and with all accessible dwelling units within the building or facility. An accessible route shall connect at least one accessible entrance of each accessible dwelling unit with those exterior and interior spaces and facilities that serve the accessible dwelling unit.

Where more than one route of travel is provided, all routes shall be accessible.

> ***EXCEPTION:*** *Where an elevator is provided for vertical access, only one elevator is required. Where more than one elevator is provided, all elevators shall be accessible.*
>
> *See Section **1114B.1.1 for a list of code sections applicable to accessible route of travel.*

1114B.1.3 Primary entry access. *All entrances and all exterior ground-level exits shall be accessible in compliance with Section 1133B.1.1.*

1114B.1.4 Signs. *See Section 1117B.5.*

1114B.1.5 Adaptable dwelling units. *See Section 1111B.*

1114B.2 Egress and Areas for Evacuation Assistance.

1114B.2.1 [For SFM] General. *In buildings or portions of buildings required to be accessible, accessible means of egress shall be provided in the same number as required for exits by Chapter 10. When an exit required by Chapter 10 is not accessible, an area for evacuation assistance shall be provided.*

Areas for evacuation assistance shall comply with the requirements of this code and shall adjoin an accessible route of travel complying with this code.

> ***EXCEPTIONS:***
> ***1.*** *Areas of evacuation assistance are not required in buildings or facilities having a supervised automatic sprinkler system.*
>
> ***2.*** *In alterations of existing buildings, areas of evacuation assistance are not required.*

1114B.2.2 [For SFM] Areas for evacuation assistance.

1114B.2.2.1 [For SFM] Location and construction. *An area for evacuation assistance shall be one of the following:*

> ***1. [For SFM] A*** *portion of a stairway landing within a smoke proof enclosure, complying with Section 1005.3.3.*

---

* In 1114B.1.1 (General) cross-reference to "Special Wheelchair Lifts" is incorrect. Cross-reference should read Special Access (Wheelchair) Lifts.
** In 1114B.1.2 (Accessible route of travel) in the exception the cross-reference to Section 1114B.1.1 is incorrect. Cross-reference should read 1114B.1.2. Footnotes will be submitted for correction in Rulemaking.

***2. [For SFM] A** portion of an exterior exit balcony located immediately adjacent to an exit stairway when the exterior exit balcony complies with Section 1006.3. Openings to the exterior of the building located within 20 feet (6096 mm) of the area for evacuation assistance shall be protected with fire assemblies having a three-fourths-hour fire-protection rating.*

***3. [For SFM] A** portion of a one-hour fire-resistive corridor complying with Section 1004.3.4 located immediately adjacent to an exit enclosure.*

***4. [For SFM] A** vestibule located immediately adjacent to an exit enclosure and constructed to the same fire-resistive standards as required by Section 1004.3.4.*

***5. [For SFM] A** portion of a stairway landing within an exit enclosure which is vented to the exterior and is separated from the interior of the building by not less than one-hour fire-resistive door assemblies.*

***6. [For SFM] when** approved by the building official, an area or room, which is separated from other portions of the building by a smoke barrier. Smoke barriers shall have a fire-resistive rating of not less than one hour and shall completely enclose the area or room. Doors in the smoke barrier shall be tight fitting smoke- and draft-control assemblies having a fire-protection rating of not less than 20 minutes and shall be self-closing or automatic closing. The area or room shall be provided with an exit directly to an exit enclosure. When the room or area exits into an exit enclosure which is required to be of more than one-hour fire-resistive construction, the room or area shall have the same fire-resistive construction, including the same opening protection, as required for the adjacent exit enclosure.*

***7. [For SFM] An** elevator lobby complying with Section 1114B.2.3.*

***1114B.2.2.2 [For SFM] Size.** Each area for evacuation assistance shall provide at least two accessible areas that are not less than 30 inches by 48 inches (762 mm by 1219 mm). The area for evacuation assistance shall not encroach on any required exit width. The total number of such 30-inch by 48-inch (762 mm by 1219 mm) areas per story shall not be less than one for every 200 persons of calculated occupant load served by the area for evacuation assistance.*

> ***EXCEPTION:** The building official may reduce the minimum number of 30-inch by 48-inch (762 mm by 1219 mm) areas to one for each area for evacuation assistance on floors where the occupant load is less than 200.*

***1114B.2.2.3 [For SFM] Adjacent stairway width.** Each stairway adjacent to an area for evacuation assistance shall have a minimum clear width of 48 inches (1219 mm) between handrails.*

1114B.2.2.4 [For SFM] Two-way communication.

***1114B.2.2.4.1 [For SFM] A** telephone with controlled access to a public telephone system or another method of two-way communication shall be provided between each area of refuge and the primary entry. The fire department may approve a location other than the primary entry.*

***1114B.2.2.4.2 [For DSA/AC] A** method of two-way communication with both visible and audible communication shall be provided between each area of evacuation assistance and the primary entry. A button in the area of rescue assistance shall activate both a light in the area of rescue assistance indicating that rescue has been requested and a light at the primary entry indicating that rescue is being requested. A button at the primary entry shall activate both a light at the primary entry and a light in the area of rescue assistance indicating that the request has been received.*

A telephone with controlled access to a public telephone system or another method of two-way communication shall be provided between each area of refuge and the primary entry. The fire department may approve a location other than the primary entry.

1114B.2.2.5 [For SFM] Identification. *Each area for evacuation assistance shall be identified by a sign which states AREA FOR EVACUATION ASSISTANCE and the international symbol of accessibility. The sign shall be illuminated when exit sign illumination is required. In each area for evacuation assistance, instructions on the use of the area under emergency conditions shall be posted adjoining the two-way communication system.*

1114B.2.3 [For SFM] Area for evacuation assistance, high rise alternative. *Within a building of any height or occupancy constructed in accordance with the requirements of Sections 403.1 through 403.10, an area for evacuation assistance may be located in the elevator lobby when:*

> ***1.*** *The area for evacuation assistance complies with the requirements for size, two-way communication and identification as specified in Section 1114B.2.2; and*
>
> ***2.*** *Elevator shafts and adjacent lobbies are pressurized as required for smoke-proof enclosures in Section 1005.3.3. Such pressurization system shall be activated by smoke detectors on each floor located in a manner approved by the building official. Pressurization equipment and its ductwork within the building shall be separated from other portions of the building by a minimum two-hour fire-resistive construction.*

1114B.2.4 [For SFM] Alarms/emergency warning systems/accessibility. *If emergency warning systems are required, they shall activate a means of warning the hearing impaired. Emergency warning systems as part of the fire-alarm system shall be designed and installed in accordance with NFPA 72 as amended in Chapter 35.*

SECTION 1115B – BATHING AND TOILET FACILITIES

1115B.1 General. *Sanitary facilities that serve buildings, facilities or portions of buildings or facilities that are required by these standards to be accessible to persons with disabilities, shall conform to the following requirements, except as specifically exempted in other portions of this code.*

> ***NOTE:*** *See Section 1111B.4.6 and Chapter 11A for bathrooms in residential occupancies.*
>
> ***EXCEPTION:*** *In existing buildings or facilities, when the enforcing agency determines that compliance with any building standard under this section would create an unreasonable hardship, an exception to such standard shall be granted when equivalent facilitation is provided. When equivalent facilitation is used, the following criteria shall apply:*
>
> ***1.*** *All sanitary facilities are not required to comply with these building standards when the enforcing agency determines that sanitary facilities are accessible to and usable by persons with disabilities within a reasonable distance of accessible areas.*
>
> ***2.*** *Equivalent facilitation would require doors to have a clear, unobstructed opening of at least 30 inches (762 mm).*

1115B.2 Toilet Facilities. *Where separate facilities are provided for nondisabled persons of each sex, separate facilities shall be provided for persons with disabilities of each sex also. Where unisex facilities are provided for persons without disabilities, at least one unisex facility shall be provided for persons with disabilities within close proximity to the nonaccessible facility. (See Figure 11B-1A.)*

1115B.2.1 Accessible water closets.

1. *The height of accessible water closets shall be a minimum of 17 inches (432 mm) and a maximum of 19 inches (483 mm) measured to the top of a maximum 2-inch high (51 mm) toilet seat.*

> ***EXCEPTION:*** *A 3-inch (76 mm) high seat shall be permitted only in alterations where the existing fixture is less than 15 inches (381 mm) high.*

2. *Controls shall be operable with one hand and shall not require tight grasping, pinching or twisting. Controls for the flush valves shall be mounted on the wide side of toilet areas, no more than 44 inches (1118 mm) above the floor. The force required to activate controls shall be no greater than 5-pound-force (lbf) (22.2 N).*

NOTES:
1. *See the California Building Code, Chapter 11A*, for additional requirements for water closets in publicly funded housing and all nonresidential occupancies.*

2. *Automatic "spring to lifted position" seats are not allowed.*

1115B.2.1.1 Accessible urinals.

1115B.2.1.1.1 Urinals *shall be floor mounted or wall hung. Where one or more wall hung urinals are provide, at least one with a rim projecting a minimum of 14 inches (356 mm) from the wall and a maximum of 17 inches (432 mm) from the wall and a maximum of 17 inches (432 mm) above the floor shall be provided.*

1115B.2.1.1.2 Flush *controls shall be operable with one hand and shall not require tight grasping, pinching or twisting of the wrist and shall be mounted no more than 44 inches (1118 mm) above the floor. The force required to activate controls shall be no greater than 5 lbf (22.2 N). Electronic automatic flushing controls are acceptable and preferable.*

1115B.2.1.2 Accessible lavatories.

1115B.2.1.2.1 Faucet *controls and operating mechanisms shall be operable with one hand in accordance with Chapter 11B of the California Building Code and shall not require tight grasping, pinching or twisting of the wrist. The force required to activate controls shall be no greater than 5 lbf (22.2 N). Lever-operated, push-type and electronically controlled mechanisms (preferable) are examples of acceptable designs. Self-closing valves are allowed if the faucet remains open for at least 10 seconds.*

Lavatories, when located adjacent to a side wall or partition, shall be a minimum of 18 inches (457 mm) to the centerline of the fixture. All lavatories that are designated to be accessible shall be mounted with the rim or counter edge no higher than 34 inches (864 mm) above the finished floor and with vertical clearance measured from the bottom of the apron or the outside bottom edge of the lavatory of 29 inches (737 mm) reducing to 27 inches (686 mm) at a point located 8 inches (203 mm) back from the front edge.

Knee clearance below the lavatory shall extend a minimum of 30 inches (762 mm) in width by 17 inches (432 mm) in depth. See Figure 11B-1D--Knee Clearance.

1115B.2.1.2.2 Hot *water and drainpipes accessible under lavatories shall be insulated or otherwise covered. There shall be no sharp or abrasive surfaces under lavatories.*

1115B.2.1.3 Accessible showers.

1115B.2.1.3.1 Water *controls of a single-lever design shall be located on a sidewall **opposite the seat and operable with a maximum force of 5-lbf (22.2 N). The controls shall be located 40 inches (1016 mm) [plus or minus 1 inch (25 mm) tolerance] above the shower floor.*

1115B.2.1.3.2 A *flexible handheld shower unit with a hose at least 60 inches (1524 mm) long shall be provided with head mounting height of 48 inches (1219 mm) [plus or minus 1-inch (25 mm) tolerance] maximum above the shower floor.*

1115B.2.1.3.3 Where *shower facilities for persons with disabilities are provided in areas subject to excessive vandalism, in lieu of providing the fixed flexible hose and handheld showerhead required above two wall-mounted showerheads shall be installed. Each showerhead shall be controlled so that it can be operated independently of the other and shall have swivel angle adjustment, both vertically and horizontally. One showerhead shall be located at a height of ***40 inches (1016 mm) [plus or minus 1 inch (25 mm) tolerance] above the floor.*

---

* In 1115B.2.1 (Accessible water closets) the cross-reference to Chapter 11A is incomplete. Cross–reference should read Chapter 11A, Section 1109A.3.
** In 1115B.2.1.3.1 (under Accessible showers) the cross-reference to "Water controls … "opposite" the seat, the word "opposite" is incorrect. The correct word should read "adjacent" to be consistent with 1115B.6.2.4.1.
*** In 1115B.2.1.3.3 the cross-reference to the "40 inches" is incorrect. Cross-reference should read 48-inches (1219 mm). Footnotes will be submitted for correction in Rulemaking.

***1115B.2.1.3.4 Where**, within the same functional area, two or more showers are provided for people with disabilities, there shall be at least one shower constructed opposite hand from the other or others (i.e., one with left-hand controls versus right-hand controls.*

***NOTE:** See the California Building Code, Chapter 11B, for showers in living accommodations.*

***1115B.2.1.4 Accessible bathtubs.** Bathtubs shall be provided with a shower spray unit having a hose at least 60 inches (1524 mm) long that can be used as a shower. Bathtub enclosures, if pro-vided, shall not obstruct controls or transfer from wheelchair onto bathtub seats or into tubs. Enclosures on bathtubs shall not have tracks mounted on their rims.*

***NOTE:** See the California Building Code, Chapter 11B, for bathtubs in living accommodations.*

1115B.2.1.5 Accessible drinking fountains.

***1115B.2.1.5.1 The** drinking fountain shall be a minimum of 18 inches (457 mm) in depth and there shall be clear and unobstructed knee space under the drinking fountain not less than 27 inches (686 mm) in height and 8 inches (203 mm) in depth, the depth measurements being taken from the front edge of the fountain. Additionally, there shall be toe clearance of 9 inches (229 mm) in height above the floor and 17 inches (432 mm) in height above the floor and 17 inches (432 mm) in depth from the front edge of the fountain. A side approach drinking fountain is not acceptable.*

***1115B.2.1.5.2 If** provided in covered multifamily buildings, drinking fountains and water coolers shall be on an accessible route. Wall-mounted and post-mounted cantilevered drinking fountains and water coolers shall have a clear knee space a minimum of 30 inches (762 mm) in width and shall also have a minimum clear floor space 30 inches by 48 inches (762 mm by 1219 mm) to allow a person in a wheelchair to approach the unit facing forward.*

***1115B.2.1.5.3** The bubbler shall be activated by a manually operated system not requiring a force greater than 5 lbf (22.2 N) that is located within 6 inches (152 mm) of the front edge of the fountain or an electronically controlled device (preferably). The bubbler outlet orifice shall be located within 6 inches (152 mm) of the front edge of the drinking fountain and within 36 inches (914 mm) of the floor. The water steam from the bubbler shall be substantially parallel to the front edge of the drinking fountain.*

***1115B.2.1.5.4 The** spout shall provide a flow of water at least 4 inches (102 mm) high so as to allow the insertion of a cup or glass under the flow of water. The force required to activate controls shall be no greater than 5 lbf (22.2 N).*

1115B.2.1.6 Accessible sinks.

***1115B.2.1.6.1 Accessible kitchen sinks.** Faucet controls and operating mechanisms shall be operable with one hand and shall not require tight grasping, pinching or twisting of the wrist. The force required to activate controls shall be not greater than 5 lbf (22.2 N). Lever-operated controls shall be ***greater than 5 pound-force (lbf) (22.2 N). Lever-operated, push-type and electronically controlled mechanisms are examples of acceptable designs. Self-closing valves are allowed if the faucet remains open for at least 10 seconds.*

***1115B.2.1.6.2 Noncommercial kitchen and counter bar sinks.** Kitchen and counter bar sinks located in common use areas shall have faucet controls and operating mechanisms operable with one hand in accordance with Chapter 11B of the California Building Code and shall not require grasping, pinching or twisting of the wrist. The force required to activate controls shall be no greater than 5 lbf (22.2 N). Lever-operated, push-type and electronically controlled mechanisms are examples of acceptable designs.*

---

* In 1115B.2.1.3.4 the cross-referenced Note is incorrect as one is already in the section for 'showers in living accommodations.' Cross-referenced Note should be deleted.

** In 1115B.2.4 the cross-referenced Note is incorrect as one is already in the section for 'accessible bathtubs.' Cross-referenced Note should be deleted.

*** In 1115B.2.1.6.1 (Accessible kitchen sinks) the 3rd sentence is incorrect. To be consistent with the 2nd sentence of this section and section 1112A.3 the 3rd sentence should read: "Lever-operated controls shall be no greater than 5 pounds-force (lbf) (22.2 N)." Footnotes will be submitted for correction in Rulemaking.

***NOTE:** See the California Building Code, Chapter 11B.*

**This diagram illustrates the specific requirements of the regulations and is intended only as an aid for building and construction.*

***1115B.3 Where Used by Children.** Where facilities are to be used solely by small children, the specific heights may be adjusted to meet their accessibility needs. See Table 1115B-1 for suggested mounting heights.*

***1115B.4 Passageways.** Passageways leading to sanitary facilities shall have a clear access. All doorways leading to such sanitary facilities shall have:*

***1115B.4.1 Clear opening.** A clear unobstructed opening width of 32 inches (813 mm).*

***1115B.4.2 Level area.** A level and clear area for a minimum depth of 60 inches (1524 mm) in the direction of the door swing as measured at right angles to the plane of the door in its closed position, and 44 inches (1118 mm) where the door swings away from the level and clear area. The width of the level area on the side to which the door swings shall extend 24 inches (610 mm) past the strike edge of the door for exterior doors and 18 inches (457 mm) past the strike edge for interior doors.*

***1115B.5 Identification Symbols.** Doorways leading to men's sanitary facilities shall be identified by an equilateral triangle 1/4 inch thick (6.4 mm) with edges 12 inches (305 mm) long and a vertex pointing upward. Women's sanitary facilities shall be identified by a circle, 1/4 inch thick (6.4mm) and 12 inches (305 mm) in diameter. Unisex sanitary facilities shall be identified by a circle 1/4 inch thick (6.4 mm), 12 inches (305 mm) in diameter with a 1/4-inch thick (6.4 mm) triangle superimposed on the circle and within the 12-inch (305 mm) diameter. These geometric symbols shall be centered on the door at a height of 60 inches (1524 mm) and their color and contrast shall be distinctly different from the color and contrast of the door.*

***NOTE:** See also Section **1117B.5.7 for additional signage requirements applicable to sanitary facilities.*

***1115B.6 Bathing Facilities.** Where facilities for bathing are provided for the public, clients or employees, including showers, bathtubs or lockers, at least one such facility, and not less than 1 percent of all facilities, shall conform to the following standards unless specifically exempted by other portions of these regulations.*

***1115B.6.1 Bathtubs.** Bathtubs required to be accessible shall comply with this section.*

***1. Floor space.** Clear floor space at bathtubs shall be as shown in Figure 11B-8.*

***2. Seat.** An in-tub seat or a seat at the head end of the tub shall be provided as shown in Figures 11B-8 and 11B-9B. The structural strength of seats and their attachments shall comply with Section 1115B.8.3. Seats shall be mounted securely and shall not slip during use.*

***3. Grab bars.** Grab bars complying with Sections 1115B.8.2, 1115B.8.3 and 1115B.8.4 shall be provided as shown in Figures 11B-9A and 11B-9B.*

***4. Controls.** Faucets and other controls shall be located as shown in Figure 11B-9B. They shall be operable with one hand and shall not require tight grasping, pinching or twisting of the wrist. The force required to activate controls shall be no greater than 5 pounds (22.2 N).*

***5. Shower unit.** A shower spray unit with a hose at least 60 inches (1524 mm) long that can be used both as a fixed shower head and as a hand-held shower shall be provided.*

***6. Bathtub enclosures.** If provided, enclosures for bathtubs shall not obstruct controls or transfer from wheelchairs onto bathtub seats or into tubs. Enclosures on bathtubs shall not have tracks mounted on their rims.*
***1115B.6.2 Showers.** Showers shall conform to the following requirements.*

---

* In 1115B.2.1.6.2 (Noncommercial kitchen and counter bar sinks) the cross-referenced note is incorrect. The cross-reference to Note should be deleted. Also cross-reference to 'This diagram' in the 2nd paragraph is incorrect. The cross-reference should be corrected in the 2nd paragraph to read "Diagram 11B-D ~~This diagram~~ illustrates the specific …"
** In 1115B.5 (Identification Symbols) the cross-reference to 1117B.5.7 is incorrect. Cross-reference should read 1117B.5.1 #2. Footnotes will be submitted for correction in Rulemaking.

1115B.6.2.1 Size. *Showers shall be 60 inches (1524 mm) minimum in width between wall surfaces and 30 inches (762 mm) minimum in depth with a full opening width on the long side, or 42 inches (1067 mm) in width between wall surfaces and 48 inches (1219 mm) minimum in depth with an entrance opening of 42 inches (1067 mm). As an alternative, showers 60 inches (1524 mm) minimum in width may be 36 inches (914 mm) minimum in depth as long as the entrance opening width is a minimum 36 inches (914 mm).*

1115B.6.2.2 Thresholds. *When a threshold or recessed drop is permitted, it shall be a maximum of 1/2 inch (13 mm) in height and shall be beveled or sloped at an angle not exceeding 45 degrees (100 percent gradient) from the horizontal.*

1115B.6.2.3 Where*, within the same functional area, two or more accessible showers are provided, there shall be at least one shower constructed opposite hand from the other or others (i.e., one left-hand controls versus right-hand controls).*

1115B.6.2.4 Accessories. *Shower accessories shall include:*

1115B.6.2.4.1 Water controls. *Water controls of a single-lever design shall be located on the side wall of the compartment adjacent to the seat and operable with a maximum force of 5 lb (22.2N) mounted at 40 inches (1016 mm) [plus or minus 1 inch (25 mm) tolerance] above the shower floor, and the centerline of the controls shall be within a reach range of no less than 18 inches (457 mm) and no more than 24 inches (610 mm) from the rear edge of the seat.*

1115B.6.2.4.2 Hand-held sprayer unit. *A flexible handheld sprayer unit with a hose at least 60 inches (1524 mm) long shall be provided within reach range of the seat at a distance not to exceed 27 inches (686 mm) horizontally measured from the rear seat edge to the centerline of the mounting bracket. This unit shall be mounted at a maximum height of 48 inches (1219 mm) [plus or minus 1 inch (25 mm) tolerance] above the shower floor.*

1115B.6.2.4.3 Sprayer unit alternative. *Except within guest rooms and suites in hotels, motels and similar transient lodging establishments where accessible shower facilities are provided in areas subject to excessive vandalism, in lieu of providing the fixed flexible hose, two wall mounted shower heads shall be installed. Each shower head shall be installed so that it can be operated independently of the other and shall have swivel angle adjustments, both vertically and horizontally. One shower head shall be located at a height of 48 inches (1219 mm) [plus or minus 1 inch (25 mm) tolerance] above the floor.*

1115B.6.2.4.4 Floor slope. *The maximum slope of the floor shall be 2 percent per foot in any direction. Where drains are provided, grate openings shall be a minimum of 1/4 inch (6.4 mm) and located flush with the floor surface.*

1115B.6.2.4.5 Shower fixtures. *Shower accessories shall include:*

1. *A folding seat located within 27 inches (686 mm) of the controls mounted 18 inches (457 mm) above the floor, and with a minimum space of 1 inch (25 mm) and maximum space of 1-½ inches (38 mm) allowed between the edge of the seat and any wall. When folded, the seat shall not extend more than 6 inches (152 mm) from the mounting wall. See Figures 11B-2A, 11B-2B, 11B-2C and 11B-2D.*

2. *Grab bars located on walls adjacent to and opposite the seat. Grab bars also comply with the diameter, loading and projection requirements of Sections 1115B.8.2, 1115B.8.3 and 1115B.8.4. Grab bars shall be mounted between a minimum of 33 inches (838 mm) and a maximum of 36 inches (914 mm) above the shower floor with an L-shaped grab bar mounted on walls opposite and adjacent to the front edge of the seat, but not extended to include that portion of wall over the seat. See Figure 11B-2A or 11B-2B.*

1115B.6.2.4.6 Soap dish. *When a soap dish is provided, it shall be located on the control wall at a maximum height of 40 inches (1016 mm) above the shower floor, and within reach limits from the seat.*

1115B.6.2.5 Enclosures. *Enclosures, when provided for shower stalls, shall not obstruct transfer from wheelchairs onto shower seats.*

NOTE: *See Figures 11B-2A, 11B-2B, 11B-2C and 11B-2D.*

1115B.6.3 Open showers. *Where no separate shower compartments are provided, the shower for persons with disabilities shall be located in a corner with L-shaped grab bars extending along two adjacent walls with a folding seat adjacent to the*

shower controls. See Figures 11B-2A, 11B-2B, 11B-2C and 11B-2D.

1115B.6.4 Lockers. *Where lockers are provided for the public, clients, employees, members or participants, at least one locker and not less than 1 percent of all lockers shall be made accessible to persons with disabilities. A path of travel not less than 36 inches (914 mm) in clear width shall be provided to these lockers.*

1115B.7 Toilet Facilities.

1115B.7.1 Multiple-accommodation toilet facilities. *Multiple-accommodation toilet facilities shall have the following:*

NOTE: *See definition in Chapter 2.*

1. Wheelchair clearance. *A clear space measured from the floor to a height of 27 inches (686 mm) above the floor, within the sanitary facility room, of sufficient size to inscribe a circle with a diameter not less than 60 inches (1524 mm), or a clear space 56 inches by 63 inches (1422 mm by 1600 mm) in size. Other than the door to the accessible water closet compartment, a door, in any position, may encroach into this space by not more than 12 inches (305 mm).*

2. Clear space at fixtures. *Doors shall not swing into the floor space required for any fixture.*

3. Accessible water closet compartment. *A water closet fixture located in a compartment shall provide a minimum 28 inch wide (711 mm) clear space from a fixture or a minimum 32 inch-wide (813 mm) clear space from a wall at one side of the water closet. The other side of the water closet shall provide 18 inches (457 mm) from the centerline of the water closet to the wall. The stall shall be a minimum of 60-inches (1524 mm) wide. A minimum 48-inch-long (1219 mm) clear space shall be provided in front of the water closet if the compartment has an end-opening door (facing the water closet). A minimum 60 inch-long (1524 mm) clear space shall be provided in a compartment with the door located at the side. Grab bars shall not project more than 3 inches (76 mm) into the clear spaces as specified above.*

4. Compartment doors. *Water closet compartment shall be equipped with a door that has an automatic-closing device, and shall have a clear, unobstructed opening width of 32 inches (813 mm) when located at the end and 34 inches (864 mm) when located at the side with the door positioned at an angle of 90 degrees from its closed position. When standard compartment doors are used, with a minimum 9-inch (229 mm) clearance for footrests underneath and a self-closing device, clearance at the strike edge as specified in Section 1133B.2.4.3 is not required.*

The inside and outside of the compartment door shall be equipped with a loop or U-shaped handle immediately below the latch. The latch shall be flip-over style, sliding, or other hardware not requiring the user to grasp or twist. Except for door-opening widths and door swings, a clear, unobstructed access of not less than 44 inches (1118 mm) shall be provided to water closet compartments designed for use by persons with disabilities and the space immediately in front of a water closet compartment shall not be less than 48 inches (1219 mm) as measured at right angles to compartment door in its closed position.

5. Large toilet rooms. *Where six or more stalls are provided within a multiple-accommodation toilet room, at least one stall shall comply with Items 2 and 3, and at least one additional stall shall be 36 inches (914 mm) wide with an outward swinging self closing door and parallel grab bars complying with Sections 1115B.8.2, 1115B.8.3 and 1115B.8.4.*

1115B.7.2 Single-accommodation toilet facilities. *There shall be sufficient space in the toilet room for a wheelchair measuring 30 inches (762 mm) wide by 48 inches (1219 mm) long to enter the room and permit the door to close. There shall be in the room a clear floor space of at least 60 inches (1524 mm) in diameter, or a T-shaped space complying with Figure 11B-12 (a) and (b). No door shall encroach into this space for more than 12 inches (305 mm) except for the panel door to any water closet compartment if there is one. (See Figure 11B-1A). The water closet shall be located in a space which provides a minimum 28-inch-wide (711 mm) clear space from a fixture or a minimum 32-inch-wide (813 mm) clear space from a wall at one side. The other side shall provide 18 inches (457 mm) from the centerline of the water closet to the wall.*

A minimum 48 inches (1219 mm) of clear space shall be provided in front of the water closet. All doors, fixtures and controls shall be on an accessible route. The minimum clear width of an accessible route shall be 36 inches (914 mm) except at doors (see Section 1133B.2). If a person in a wheelchair must make a turn around an obstruction, the minimum clear width of the

accessible route shall be as shown in Figure 11B-5E. (See also Figure 11B-1A.)

> ***NOTE:*** *For bathrooms serving residential occupancies, see Section 1111B.4.6 and Chapter 11A.*
>
> ***EXCEPTION:*** *In an existing building, a single-accommodation toilet facility may have the water closet fixture located in an area which provides a clear space of not less than 36 inches (914 mm) wide by 48 inches (1219 mm) long in front of the water closet.*

1115B.8 Grab Bars.

1115B.8.1 Location. *Grab bars located on each side, or one side and the back of the accessible toilet stall or compartment, shall be securely attached 33 inches (838 mm) above and parallel to the floor, except that where a tank-type toilet is used which obstructs placement at 33 inches (838 mm), the grab bar may be as high as 36 inches (914 mm). Grab bars shall be at least 42 inches (1067 mm) long with the front end positioned 24 inches (610 mm) in front of the water closet stool. Grab bars at the back shall not be less than 36 inches (914 mm) long. See Figures 11B-1A, 11B-1B and 11B-1C.*

1115B.8.2 Diameter or width. *The diameter or width of the gripping surfaces of a grab bar shall be 1-¼ inches to 1-½ inches (32 mm to 38 mm) or the shape shall provide an equivalent gripping surface. If grab bars are mounted adjacent to a wall, the space between the wall and the grab bars shall be 1-½ inches (38 mm). See Figure 11B-1C.*

1115B.8.3 Structural strength. *The structural strength of grab bars, tub and shower seats, fasteners, and mounting devices shall meet the following specifications:*

> ***1.*** *Bending stress in a grab bar or seat induced by the maximum bending moment from the application of a 250-pound (1112 N) point load shall be less than the allowable stress for the material of the grab bar or seat.*
>
> ***2.*** *Shear stress induced in a grab bar or seat by the application of a 250-pound (1112N) point load shall be less than the allowable shear stress for the material of the grab bar or seat, and its mounting bracket or other support is considered to be fully restrained, then direct and torsional shear stresses shall not exceed the allowable shear stress.*
>
> ***3.*** *Shear force induced in fastener or mounting device from the application of a 250-pound (1112 N) point load shall be less than the allowable lateral load of either the fastener or mounting device or the supporting structure, whichever is the smaller allowable load.*
>
> ***4.*** *Tensile force induced in a fastener by a direct tension force of a 250-pound (1112 N) point load, plus the maximum moment from the application of a 250-pound (1112 N) point load, shall be less than the allowable withdrawal load between the fastener and supporting structure.*
>
> ***5.*** *Grab bars shall not rotate within their fittings.*

1115B.8.4 Surface. *A grab bar and any wall or other surface adjacent to it shall be free of any sharp or abrasive elements. Edges shall have a minimum radius of 1/8 inch (3.2 mm).*

1115B.9 Toilet Room Fixtures and Accessories.

1115B.9.1 Lavatory fixtures. *The requirements of this subsection shall apply to lavatory fixtures, vanities and built-in lavatories.*

> ***1.*** *A clear floor space 30 inches by 48 inches (762 mm by 1219 mm) complying with Section 1118B.4 shall be provided in front of a lavatory to allow a forward approach. Such clear floor space shall adjoin or overlap an accessible route and shall extend into knee and toe space underneath the lavatory.*
>
> ***2.*** *Mirrors shall be mounted with the bottom edge no higher than 40 inches (1016 mm) from the floor.*

1115B.9.2 Towel, sanitary napkins, waste receptacles. *Where towel, sanitary napkins, waste receptacles, and other similar dispensing and disposal fixtures are provided, at least one of each type shall be located with all operable parts, including coin slots, within 40 inches (1016 mm) from the finished floor.*

1115B.9.3 Toilet tissue dispensers. *Toilet tissue dispensers shall be located on the wall within 12 inches (305 mm) of the front edge of the toilet seat. Dispensers that control delivery or that do not permit continuous paper flow shall not be used. See Figure 11B-1A.*

1115B.9.4 Urinals. *Where urinals are provided, at least one shall have a clear floor space 30 inches by 48 inches (762 mm by 1219 mm) in front of the urinal to allow forward approach. This clear space shall comply with Section 1118B.4.*

1115B.9.5 Interior surfaces. *In other than dwelling units, toilet room floors shall have a smooth, hard, nonabsorbent surface such as Portland cement, concrete, ceramic tile or other approved material which extends upward onto the walls at least 5 inches (127 mm). Walls within water closet compartments and walls within 24 inches (610 mm) of the front and sides of urinals shall be similarly finished to a height of 48 inches (1219 mm) and, except for structural elements, the materials used in such walls shall be a type which is not adversely affected by moisture.*

1115B.9.6 Shower areas. *Showers in all occupancies shall be finished as specified in Section 1115B.9.5 to a height of not less than 70 inches (1778 mm) above the drain inlet. Materials other than structural elements used in such walls shall be of a type which is not adversely affected by moisture.*

1115B.9.7 Doors and panels. *Doors and panels of shower and bathtub enclosures shall be substantially constructed from approved, shatter-resistant materials. Hinged shower doors shall open outward.*

1115B.9.8 Glazing for shower and bathtub enclosures. *Glazing used in doors and panels of shower and bathtub enclosures shall be fully tempered, laminated safety glass or approved plastic. When glass is used, it shall have minimum thickness of not less than 1/8 inch (3.2 mm) when fully tempered, or 1/4 inch (6.4 mm) when laminated, and shall pass the test requirements of UBC Standard 24-2.*

1115B.9.9 Plastics. *Plastics used in doors and panels of showers and bathtub enclosures shall be of a shatter-resistant type.*

TABLE 1115B-1 – SUGGESTED DIMENSIONS FOR CHILDREN'S USE

*The Division of the State Architect, *Office of Regulation Services recommends the following dimensions as adequately serving the needs of children in projects under our jurisdiction. These recommendations are based on the federal "Recommendations for Accessibility for Children in Elementary School" and other recognized publications on access for children:*
A = Adult Dimensions (age 12 and over)
E = Elementary Dimensions
K = Kindergarten and Pre-school Dimensions

		SUGGESTED	
DIMENSION	**A (Inches)**	**E (Inches)**	**K (Inches)**
Toilet centering from wall	18	15	12
Toilet seat height/Dimensions to top of seat	17-19	15	10-12
Grab bar height (side)	33	27	20-22
Toilet paper in front of toilet	12 max.	6 max.	6 max.
Napkin disposal in front of toilet	12 max.	12 max.	N/A
Dispenser or mirror height.	40 max	36 max	32 max
Lavatory/sink top height...	34 max	29 max	24 max
Lavatory/sink knee clearance	27 min.	24 min.	19 min.
Urinal lip height...	17 max	15 max	13 min
Urinal flush handle height..	44 max.	37 max	32 max
Drinking fountain bubbler height..	36 max	32 max	30 max
Drinking fountain knee clearance.	27 min	24 min.	22 min
Ramp/stair handrail height	34-38	27	22

SECTION 1116B – ELEVATORS AND SPECIAL ACCESS (WHEELCHAIR) LIFTS

1116B.1 Elevators. *Elevators shall be accessible. Elevators required to be accessible shall be designed and constructed to comply with this section.*

* In Table 1115B-1 (Suggested Dimensions for Children's Use) the cross-reference to the Division of the State Architect, "Office of Regulations Services is incorrect. To correct cross-reference Office of Regulation Services should read Access Compliance. This will be submitted for correction in Rulemaking.

1116B.1.1 General. *Size of cab and control locations and requirements for accommodation of people with disabilities.*

In buildings two or more stories in height, served by an elevator, or a building served by an elevator required by Chapter 11B, or a building served by an elevator required for accessibility by Section 101.17, all elevators provided shall accommodate a wheelchair.

> ***EXCEPTIONS:***
> ***1.*** *When the enforcing agency determines that compliance with any regulation under this section would create an unreasonable hardship, an exception to such regulation shall be granted when equivalent facilitation is provided, and where it can be demonstrated that a person using a wheelchair can enter and operate the elevator.*
>
> ***2.*** *These provisions shall not apply to existing buildings when legal or physical constraints will not allow compliance with these regulations or equivalent facilitation without creating an unreasonable hardship. See Section 101.17.*

1116B.1.2 Operation and leveling. *The elevator shall be automatic and provided with a self-leveling feature that will automatically bring the car to the floor landings within a tolerance of plus or minus 1/2 inch (12.7 mm) under normal loading and unloading conditions. This self-leveling shall, within its zone, be entirely automatic and independent of the operating device and shall correct the overtravel or undertravel. The car shall also be maintained approximately level with the landing, irrespective of load.*

The clearance between the car platform sill and the edge of the hoistway landing shall be no greater than 1-¼ inches (32 mm).

1116B.1.3 Door operation. *Power-operated horizontally sliding car and hoistway doors opened and closed by automatic means shall be provided.*

1116B.1.4 Door size. *Minimum clear width for elevator doors shall be 36 inches (914 mm).*

> ***EXCEPTION:*** *When approved by the building official, the minimum door width may be reduced to 32 inches (813 mm) for a car with dimensions as permitted by the exception to Section *1116B.1.6.*

1116B.1.5 Door protective and reopening device. *Doors closed by automatic means shall be provided with a door-reopening device that will function to stop and reopen a car door and adjacent hoistway door in case the car door is obstructed while closing.*

This reopening device shall also be capable of sensing an object or person in the path of a closing door without requiring contact for activation at a nominal 5 inches and 29 inches (127 mm and 737 mm) above the floor.

Door-reopening devices shall remain effective for a period of not less than 20 seconds.

After such an interval, the doors may close in accordance with the requirements of ANSI 17.1-86, the American Society of Mechanical Engineers (ASME) document ASME 17.1-1990.

1116B.1.6 Hall call. *The minimum acceptable time from notification that a car is answering a call (lantern and audible signal) until the doors of the car start to close shall be calculated by the following equation:*

$$T = D / (1.5 \text{ ft/s}) \text{ or } T = D / (445 \text{ mm/s})$$

---

* In 1116B.1.4 (Door size) in the exception the cross-reference to 'Section 1116B.1.6' is incorrect. Cross-reference should read 1116B.1.8. This will be submitted for correction in Rulemaking.

Where T is the total time in seconds and D is the distance from a point in the lobby or landing area 60 inches (1524 mm) directly in front of the farthest call button controlling that car to the centerline of its hoistway door (see Figure 11B-40D). For cars with in car lanterns, T begins when the lantern is visible from the vicinity of hall call buttons and an audible signal is sounded.

1116B.1.7 Car call. *The minimum acceptable time for doors to remain fully open shall not be less than five seconds.*

1116B.1.8 Car inside. *The car inside shall allow for the turning of a wheelchair. The minimum clear distance between walls or between wall and door, excluding return panels, shall not be less than 80 inches by 54 inches (2032 mm by 1372 mm) for center opening doors, and 68 inches by 54 inches (1727mmby 1372 mm) for side-slide openings doors. See Figure 11B-40A.Minimum distance from wall to return panel shall not be less than 51 inches (1295 mm).*

The centerline of elevator floor buttons shall be no higher than 54 inches (1372 mm) above the finish floor for side approach and 48 inches (1219 mm) for front approach. Except for photoelectric tube bypass switches, emergency controls, including the emergency stop and alarm, shall be grouped in or adjacent to the bottom of the panel and shall be no lower than 2 feet 11 inches (889 mm) from the floor.

*For multiple controls only, one set must comply with these height requirements. Floor buttons shall be provided with visual indicators to show when each call is registered. The visual indicators shall be extinguished when each call is answered. The emergency telephone handset shall be positioned no higher than 4 feet (1219 mm) above the floor, and the handset cord shall be a minimum of 2 feet 5 inches (737 mm) in length. If the telephone system is located in a closed compartment, the compartment door hardware shall be lever type conforming to the provisions of Section **1004.3, type of lock or latch. Emergency intercommunication shall not require voice communication.*

> ***NOTE:*** *Where possible, a 48-inch (1219 mm) maximum height for elevator floor buttons is preferred.*

1116B.1.9 Car controls. *Identification for the visually impaired shall be as follows:*

Passenger elevator car controls shall have a minimum dimension of 3/4 inch (19.1 mm) and shall be raised 1/8 inch (3.2 mm) plus or minus 1/32 inch (0.8 mm) above the surrounding surface.

Control buttons shall be illuminated, shall have square shoulders and shall be activated by a mechanical motion that is detectable.

All control buttons shall be designated by 5/8-inch-minimum (15.9 mm) characters that conform to Section 1117B.5.5, or standard raised symbol immediately to the left of the control button. Grade 2 Braille that conforms to Section 1117B.5.6 shall be located immediately below the character or symbol. A minimum clear space of 3/8 inch (9.5 mm) or other suitable means of separation shall be provided between rows of control buttons.

> ***NOTE:*** *See Figure 11B-40B.*

The raised characters shall be white on a black background.

Controls and emergency equipment identified by raised symbols shall include, but not be limited to, door open, door close, alarm bell, emergency stop and telephone. The call button for the main entry floor shall be designated by a raised star at the left of the floor designation.

1116B.1.10 *Car position indicator and signal. *The centerline of the hall call button shall be within 42 inches (1067 mm) of the floor. Buttons shall be a minimum of 3/4-inch (19.1mm) in size and shall be raised 1/8 inch (3.2 mm) [plus or minus 1/32 inch (0.8 mm)] above the surrounding surface. Visual indication shall be provided to show each call registered and extinguished when answered. Objects adjacent to, and below, hall call buttons shall not project more than 4 inches (102 mm) from the wall.*

1116B.1.11 Handrails. *A handrail shall be provided on one wall of the car, preferably the rear. The rails shall be smooth,*

** In 1116B.1.8 in the last sentence of the 3rd paragraph the cross-reference to 'Section 1004.3' is incorrect. Cross-reference should read 1003.3.1.8.
* In 1116B.1.10 title of 'Car position indicator and signal' is incorrect. Title should read Hall Buttons. Also, the 4th line of section 1116B.1.13 is relocated to 1116B.1.10 as the 3rd line. This sentence is new language that was adopted in the 2001 Code Adoption cycle and is now published in the 2002 ed. of Part 2; however, it was adopted into the wrong section for 'Hall Buttons.' Footnotes will be submitted for correction in Rulemaking.

and the inside surface at least 1- ½ inches (38 mm) clear of the walls at a nominal height of 32 inches (813 mm) from the floor. Nominal equals ± 1 inch (25 mm).

> ***NOTE:*** *Thirty-two inches (813 mm) required to reduce interference with car controls where lowest button is centered at 35 inches (889mm) above floor.*

1116B.1.12 Minimum illumination. *The minimum illumination at the car controls threshold and the landing when the car and landing doors are open shall not be less than 5 foot-candles (54 lx).*

****1116B.1.13 Hall buttons.*** *The centerline of the hall call buttons shall be a nominal 42 inches (1067 mm) above the floor.*

Direction buttons, exclusive of border, shall be a minimum of ¾ inch (19.1 mm) in size, raised, flush or recessed. Visual indication shall be provided to show each call registered and extinguished when the call is answered. Hall call buttons shall be internally illuminated with a white light over the entire surface of the button. Depth of flush or recessed button when operated shall not exceed 3/8 inch (9.5 mm).

1116B.1.14 Hall lantern. *A visual and audible signal shall be provided at each hoistway entrance indicating to the prospective passenger the car answering the call and its direction of travel as follows:*

The visual signal for each direction shall be a minimum of 2-½ inches (64 mm) high by 2 ½ inches (64 mm) wide and visible from the proximity of the hall call button.

The audible signal shall sound once for the up direction and twice for the down direction or of a configuration that distinguishes between up and down elevator travel.

The centerline of the fixture shall be located a minimum of 6 feet (1829 mm) in height from the lobby floor.

The use of in-car lanterns, located in or on the car doorjambs, visible from the proximity of the hall call buttons and conforming to the above requirements, shall or will be acceptable.

The use of arrow shapes are preferred for visible signals.

1116B.1.15 Doorjamb marking. *Passenger elevator landing jambs on all elevator floors shall have the number of the floor on which the jamb is located designated by raised characters that are a minimum of 2 inches (51 mm) in height and conform to Section 1117B.5.5 and Grade 2 Braille that conforms to Section 1117B.5.6 located 60 inches on center (1524 mm) above the floor on the jamb panels on both sides of the door so that they are visible from within the elevator. On the grade level, a raised five pointed star shall be placed to the left of the raised character. The outside diameter of the star shall be 2 inches. Braille shall be placed below the corresponding raised characters.*

The raised characters shall otherwise comply with Sections 1117B.5.3, 1117B.5.4 and 1117B.5.2. See Figure 11B-40B.

1116B.1.16 Location. *Passenger elevators shall be located near a major path of travel, and provisions shall be made to ensure that they remain accessible and usable at all times the building is occupied.*

1116B.2 Special Access (Wheelchair) Lifts. *Special access wheelchair lifts may be provided between levels in lieu of passenger elevators when the vertical distance between landings, as well as the structural design and safeguards are as allowed by the State of California, Division of the State Architect, Access Compliance, the Department of Industrial Relations, Division of Occupational Safety and Health and any applicable safety regulations of other administrative authorities having jurisdiction.*

---

*In 1116B.1.13 (Hall buttons) was erroneously shown as being adopted by DSA/AC. Section 1116B.1.13 is model code language as published in the 2001 ed. of Part 2 in Chapter 30 and is in conflict with existing State language for 'hall buttons' in 1116B.1.10. Repeal 1116B.1.13 except for the 4th sentence, which is being relocated to 1116B.1.10. This will be submitted for correction in Rulemaking.

If lifts are provided, they shall be designed and constructed to facilitate unassisted entry, operation and exit from the lift and shall comply with the restrictions and enhancements of this section in conjunction with Sections 3093 to 3094, Part 7 of the California Code of Regulations.

Additionally, lifts may be provided as part of an accessible route only for the following conditions:

***1116B.2.1 To** provide an accessible route to a performing area in an assembly occupancy, or to a speaking area or similar place (such as a dais for "head table") in an assembly or Group B Occupancy.*

***1116B.2.2 To** comply with the wheelchair viewing position line of-sight and dispersion requirements of Section 1104B.3.5.*

***1116B.2.3 To** provide access to incidental occupiable spaces and rooms which are not open to the general public and which house no more than five persons, including, but not limited to, equipment control rooms and projection booths.*

***1116B.2.4 To** provide access where existing site constraints or other constraints make use of a ramp or an elevator infeasible.*

> ***EXCEPTIONS:***
> ***1.** The provisions of this section shall not apply to existing buildings when physical constraints will not allow compliance with these regulations or equivalent facilitation without creating an unreasonable hardship.*
>
> ***NOTE:** See Section 101.17.*
>
> ***2.** When the enforcing agency determines that compliance with any regulation under this section would create an unreasonable hardship, an exception to such regulation shall be granted when equivalent facilitation is provided.*
>
> ***3.** The installation of lifts as part of an accessible route for additions or alterations is not limited to the four conditions required by Section 1116B.*

***1116B.2.4.1 Landing size.** In new construction, the minimum size of landings specified in this section shall be 60 inches by 60 inches (1524 mm by 1524 mm). Other dimensions may be substituted where it can be demonstrated that a person using a wheelchair measuring 30 inches by 48 inches (762mmby 1219 mm) can enter and operate the lift safely.*

***1116B.2.4.2 Relationship to the path of travel.** Level and clear floor areas or landings as specified in this section shall be part of "path of travel" requirements. See Section 217.*

***1116B.3 Special Access (Wheelchair) Lifts.** Special access (wheelchair) lifts shall not be used as a component of an exit component in an egress system.*

> ***EXCEPTION:** When provided as a means of egress component per Section *1116B.2.2 the specialty access lift is permitted to be part of an accessible exit component when:*
>
> ***1.** The building has a supervised automatic sprinkler system.*
>
> ***2.** The area served by the special access lift does not serve more than 4 wheelchair viewing positions.*
>
> ***3.** The length of the common path of travel to a point where the occupant has a choice of two directions to an exit shall not exceed 30 feet (9144 mm). The length of the common path of travel shall include the vertical travel distance of the lift.*
>
> ***4.** The special access lift is provided with standby power or with self-recharging battery power that provides sufficient power to operate all platform lift functions for a minimum of 5 (five) upward and downward trips.*

***1116B.3.1 Platform** lifts used, as a component in a means of egress system shall conform to the requirements of Section 1116B.3.*

***1116B.3.2 Platform** lifts shall be provided with standby power or with self-rechargeable battery power that provides sufficient power to operate all platform lift functions for a minimum of 5 (five) upward and downward trips.*

---

* In 1116B.3 (Special Access (Wheelchair) Lifts) in the exception the cross-reference to "Section 1116B.2.2" is incorrect. Cross-reference should read 1116B.2. This will be submitted for correction in Rulemaking.

1116B.3.3 When *used to comply to Section 1116B.2.2 wheelchair viewing position line-of-sight and dispersion requirements of Chapter 11B and the maximum distance to a point where the occupant has a choice of two directions of travel to an exit shall not exceed 30 feet (9144 mm) from the point where the wheelchair occupant is seated. Where a platform lift is used as the accessible means of egress, the maximum distance shall include the vertical travel distance of the platform lift.*

SECTION 1117B – OTHER BUILDING COMPONENTS

1117B.1 Water Fountains (Drinking).

1117B.1.1 General. *Where water fountains are provided, they shall comply with this section.*

*In new construction, where only one drinking fountain area is provided on a floor, there shall be a drinking fountain that is accessible to individuals who use wheelchairs in accordance with Section **1115B.2.1.2 and one accessible to those who have difficulty bending or stooping. This can be accommodated by the use of "hi-low" fountains, or by such other means as would achieve the required accessibility for each group on each floor.*

1117B.1.2 Alcoves. *Water fountains shall be located completely within alcoves or otherwise positioned so as not to encroach into pedestrian ways. The alcove in which the water fountain is located shall not be less than 32 inches (813 mm) in width and 18 inches (457 mm) in depth. See Figure 11B-3 of this code. Protruding objects located in alcoves or otherwise positioned so as to limit encroachment into pedestrian ways are permitted to project 4 inches into ***walls, halls corridors, passageways or aisles.*

> ***EXCEPTION:*** *When the enforcing agency determines that it would create an unreasonable hardship to locate the water fountain in an alcove, the water fountain may project into the path of travel, and the path of travel shall be identifiable to the blind as follows:*
>
> ***1.*** *The surface of the path of travel at the water fountain shall be textured so that it is clearly identifiable by a blind person using a cane. The minimum textured area shall extend from the wall supporting the water fountain to 1 foot (305 mm) beyond the front edge of the water fountain and shall extend 1 foot (305mm) beyond each side of the water fountain, or*
>
> ***2.*** *Wing walls shall be provided on each side of the water fountain. The wing walls shall project out from the supporting wall at least as far as the water fountain to within 6 inches (152 mm) of the surface of the path of travel. There shall also be a minimum of 32 inches (813 mm) clear between the wing walls.*

1117B.2 Telephones.

1117B.2.1 General. *If public telephones are provided, they shall comply with this section to the extent required by the following table. See Figure 11B-4.*

Number of each type of telephone provided on each floor	*Minimum number of telephones required to comply with Section 1117B.2*[1]
1 or more single units	*1 or at least 50 percent of telephone unit(s) per floor*
1 telephone bank	*1 or at least 50 percent of telephone unit(s) per bank*
2 or more banks	*1 or at least 50 percent of telephone unit(s) per bank at least 1 telephone per floor shall meet the requirements for a forward reach telephone*

[1]*Additional public telephones may be installed at any height.*

1117B.2.2 Clear floor ground space. *A clear floor or ground space at least 30 inches by 48 inches (762 mm by 1219 mm) that allows either a forward or parallel approach by a person using a wheelchair shall be provided at telephones.*

** In 1117B.1.1 (General) in paragraph 2 the cross-reference to "Section 1115B.2.1.2" is incorrect. Cross-reference should read 1115B.2.1.5.
*** In 1117B.1.2 the word 'walls' is spelled incorrectly. Word should read 'walks'. Footnotes will be submitted for correction in Rulemaking.

1117B.2.3 Size and approach. *The minimum clear floor ground space required to accommodate a single, stationary wheelchair and occupant is 30 inches by 48 inches (762mmby 1219 mm). The minimum clear floor or ground space for wheelchairs may be positioned for forward or parallel approach to an object. Clear floor or ground space for wheelchairs may be part of the knee space required under some objects. See Figure 11B-5A.*

1117B.2.4 Relationship of maneuvering clearances to wheelchair spaces. *One full unobstructed side of the clear floor or ground space for a wheelchair shall adjoin another wheelchair clear floor space. If a clear floor space is located in an alcove or otherwise confined on all or part of three sides, additional maneuvering clearances shall be provided. See Figure 11B-5A.*

1117B.2.5 Floor surfaces of wheelchair spaces. *Floor surfaces of wheelchair spaces shall conform to Section 1124B. Bases, enclosures and fixed seats shall not impede approaches to telephones by people who use wheelchairs.*

1117B.2.6 Mounting height. *The highest operable part of the telephone shall be within the reach ranges specified in Sections 1118B.5 and 1118B.6. Telephones mounted diagonally in a corner that require wheelchair users to reach diagonally shall have the highest operable part no higher than 54 inches (1372 mm) above the floor. See Figure 11B-4.*

1117B.2.7 Enclosures. *If telephone enclosures are provided, they may overhang the clear floor space required in Sections 1117B.2.2, 1117B.2.3 and 1117B.2.4 within the following limits:*

> ***1. Side reach possible.*** *The overhang shall be no greater than 19 inches (483 mm). The height of the lowest overhanging part shall be equal to or greater than 27 inches (686 mm). See Figure 11B-4 (a).*
>
> ***2. Full-height enclosures.*** *Entrances to full-height enclosures shall be 30 inches (762 mm) minimum. See Figure 11B-4 (b).*
>
> ***3. Forward reach required.*** *If the overhang is greater than 12 inches (305 mm), then the clear width of the enclosure shall be 30 inches (762 mm) minimum; if the clear width of the enclosure is less than 30 inches (762 mm), then the height of the lowest overhanging part shall be equal to or greater than 27 inches (686 mm). See Figure 11B-4 (c).*
>
> ***4. Protruding telephone enclosures.*** *Where telephone enclosures protrude into walls, halls, corridors or aisles, they shall also comply with Section 1133B.8.6.*

1117B.2.8 Telephone equipment for hearing impaired persons. *Telephones shall be equipped with a receiver that generates a magnetic field in the area of the receiver cap. If banks of public telephones are provided, at least one in each bank and a total of at least 25 percent of the total number of public telephones, including closed-circuit telephones in a building or facility, shall be equipped with a volume control. Such telephones shall be capable of a minimum of 12 dBA and a maximum of 18 dBA above normal. If an automatic reset is provided, 18 dBA may be exceeded. Public telephones with volume control shall be hearing aid compatible and shall be identified by a sign containing a depiction of a telephone handset with radiating sound waves.*

1117B.2.9 Text telephones.

1117B.2.9.1 Where required. *If a total of four or more public pay telephones are provided at the interior and exterior of a site, and if at least one of the total is in an interior location, then at least one interior public text telephone shall be provided.*

> ***EXCEPTIONS:***
> ***1.*** *If an interior public pay telephone is provided in a stadium or arena, in a convention center, in a hotel with a convention center, or in a covered mall, at least one interior public text telephone shall be provided in the facility.*
>
> ***2.*** *If a public pay telephone is located in or adjacent to a hospital emergency room, hospital recovery room or hospital waiting room, one public text telephone shall be provided at each location.*

1117B.2.9.2 General. *Text telephones shall comply with the following requirements:*

1. *Text telephones used with a pay telephone shall be permanently affixed within or adjacent to the telephone enclosure. If an acoustic coupler is used, the telephone cord shall be sufficiently long to allow connection of the text telephone and the telephone receiver.*

2. *Pay telephones designed to accommodate a portable text telephone shall be equipped with a shelf and an electrical outlet within or adjacent to the telephone enclosure. The telephone handset shall be capable of being placed flush on the surface of the shelf. The shelf shall be capable of accommodating a text telephone and shall have 6 inches (152 mm) minimum vertical clearance in the area where the text telephone is to be placed.*

3. *Equivalent facilitation may be substituted for the requirements of this section. For example, a portable text telephone may be made available in a hotel at a registration desk if it is available on a 24-hour basis for use with nearby public pay phones. In this instance, at least one pay phone shall comply with Item 2. In addition, if an acoustic coupler is used, the telephone handset cord shall be sufficiently long to allow connection of the text telephone and the telephone receiver. Directional signage shall comply with Section 1117B.5.*

1117B.2.9.3 Signage. *Text telephones shall be identified by the International TTY symbol (see Figure *11B-14). If a facility has a public text telephone, directional signage indicating the location of the nearest such telephone shall be placed adjacent to all banks of telephones that do not contain a text telephone. Such directional signage shall include the International TTY symbol. If a facility has no banks of telephones, the directional signage shall be provided at the entrance or in a building directory.*

1117B.2.10 Controls. *Telephones shall have push-button controls where service for such equipment is available.*

1117B.2.11 Cord length. *The cord from the telephone to the handset shall be at least 29 inches (737 mm) long.*

1117B.2.12 Telephone books. *If telephone books are provided, they shall be located in a position that complies with the reach ranges in Sections 1118B.5 and 1118B.6.*

1117B.3 Kitchens. *See Section 1112A.*

1117B.4 Swimming Pools. *See Section 1104B.4.3.*

1117B.5 Signs and Identification.

> ***NOTE:*** *California's standards for signage are more stringent and are significantly larger and wider than Federal law, Americans with Disabilities Act (ADA) Section 4.30.*

1117B.5.1 *International symbol of accessibility.

1. General. *When new or additional signs and/or identification devices are provided, or when existing signs and/or identification devices are replaced or altered, the new or altered signs and/or identification devices shall comply with 1117B.5. The addition of or replacement of signs and/or identification devices shall not trigger any additional path of travel requirements.*

---

* In 1117B.2.9.2 (Signage) cross-reference to 'Figure 11B-14 ' is incorrect. Cross-reference should read 11B-14A.

* In 1117B.5.1 (International Symbol of Accessibility) Title of 1117B.5.1 and title of item #1 under 1117B.5.1 are incorrect. The regulations for the International Symbol of Accessibility are found 1117B.5.8. Correct title of 1117B.5.1 to read 'General' and delete the title from Item #1. Footnotes will be submitted for correction in Rulemaking.

2. Identification signs. *When signs identify permanent rooms and spaces of a building or site, they shall comply with 1117B.5.2, 1117B.5.3, 1117B.5.5, 1117B.5.6 and 1117B.5.7.*

> ***NOTE:*** *For other means of egress signs and identification provisions adopted by SFM & DSA/AC see Chapter 10, Sections 1003.2.8.1 for Visual Exit Signs, 1003.2.8.2 for Where Required, 1003.2.8.3 for Graphics, 1003.2.8.4 for Illumination, 1003.2.8.5 for Power Source, 1003.2.8.6 for Tactile Exit Signage, 1003.2.8.6.1 for Where Required, 1003.3.3.13.1 for Tactile Stair Level Identification Sign, and 1003.3.1.10 for Special Egress-control Devices.*

3. Direction and informational signs. *When signs direct to or give information about permanent rooms and space of a building or site, they shall comply with 1117B.5.2, 1117B.5.3 and 1117B.5.4.*

4. Accessibility signs. *When signs identify, direct or give information about accessible elements and feature of a building or site, they shall include the appropriate symbol of accessibility and shall comply with 1117B.5.2 and, when applicable, 1117B.5.8.*

1117B.5.2 Finish and contrast. *Characters, symbols and their background shall have a non-glare finish. Characters and symbols shall contrast with their background, either light characters on a dark background or dark characters on a light background.*

1117B.5.3 Proportions. *Characters on signs shall have a width to-height ratio of between 3:5 and 1:1 and a stroke width to height ratio of between 1:5 and 1:10.*

1117B.5.4 Character height. *Characters and numbers on signs shall be sized according to the viewing distance from which they are to be read. The minimum height is measured using an uppercase X. Lowercase characters are permitted. For signs suspended or projected above the finish floor in compliance with Section 1133B.8.6, the minimum character height shall be 3 inches (76 mm).*

1117B.5.5 Raised characters and pictorial symbol signs. *When raised characters are required or when pictorial symbols (pictograms) are used on such signs, they shall conform to the following requirements:*

> ***1. Character type.*** *Characters on signs shall be raised 1/32-inch (0.794 mm) minimum and shall be sans serif uppercase characters accompanied by Grade 2 Braille complying with 1117B.5.6.*
>
> ***2. Character size.*** *Raised characters shall be a minimum of 5/8 inch (15.9 mm) and a maximum of 2 inches (51 mm) high.*
>
> ***3. Pictorial symbol signs (pictograms).*** *Pictorial symbol signs (pictograms) shall be accompanied by the verbal description placed directly below the pictogram. The outside dimension of the pictogram field shall be a minimum of 6 inches (152 mm) in height.*

1117B.5.6 Braille. *Contracted Grade 2 Braille shall be used wherever Braille is required in other portions of these standards. Dots shall be 1/10 inch (2.54 mm) on centers in each cell with 2/10-inch (5.08 mm) space between cells, measured from the second column of dots in the first cell to the first column of dots in the second cell. Dots shall be raised a minimum of 1/40 inch (0.635 mm) above the background.*

1117B.5.7 Mounting location and height. *Where permanent identification is provided for rooms and spaces, signs shall be installed on the wall adjacent to the latch *outside of the door. Where there is no wall space on the latch side, including at double leaf doors, signs shall be placed on the nearest adjacent wall, preferably on the right.*

Mounting height shall be 60 inches (1524 mm) above the finish floor to the center line of the sign. Mounting location shall be determined so that a person may approach within 3 inches (76 mm) of signage without encountering protruding objects or standing within the swing of a door.

> ***NOTE:*** *See also Section 1115B.5 for additional signage requirements applicable to sanitary facilities.*

---

* In 1117B.5.7 (Mounting location and height) the 1st sentence is incorrectly worded, which is causing misunderstanding regarding proper application. Correct word 'outside' to read 'side'. This will be submitted for correction in Rulemaking.

1117B.5.8 *Symbols of accessibility.

1117B.5.8.1 Symbols of accessibility. *The International Symbol of Accessibility shall be the standard used to identify facilities that are accessible to and usable by physically disabled persons as set forth in these building standards and as specifically required in this section. See Figure 11B-6.*

> ***EXCEPTION:*** *Signs need not be provided for facilities within an adaptable dwelling unit, or within an accessible patient or guest room.*

1117B.5.8.1.1 Color of symbol. *The symbol specified above shall consist of a white figure on a blue background. The blue shall be equal to Color No. 15090 in Federal Standard 595B.*

> ***EXCEPTION:*** *The appropriate enforcement agency may approve special signs and identification necessary to complement decor or unique design when it is determined that such signs and identification provide adequate direction to persons with disabilities.*

1117B.5.8.1.2 Entrance signs. *All building entrances that are accessible to and usable by persons with disabilities shall be identified with a minimum of one International Symbol of Accessibility and with additional directional signs, utilizing the symbol, at junctions, to be visible to persons along approaching pedestrian ways.*

1117B.5.8.1.3 Information posted. *Buildings that have been remodeled to provide specific sanitary facilities and/or elevators for public use that conform to these building standards shall have this information posted in the building lobby, preferably as part of the building directory. The information shall be accompanied by the International Symbol of Accessibility.*

1117B.5.8.2 International symbol of TTY. *Where the International Symbol of TTY is required, it shall comply with Figure 11B-14A.*

1117B.5.8.3 Volume control telephones. *Where telephones with volume controls are required to be identified, the identification symbol shall be a telephone hand set with radiating sound waves, such as shown in Figure 11B-14B.*

1117B.5.8.4 Assistive listening systems. *Where assistive listening systems are required to be identified by the International Symbol of Access for Hearing Loss, it shall comply with Figure 11B-14C.*

1117B.5.9 Traffic-control devices. *Pole-supported pedestrian traffic-control buttons shall be identified with color coding consisting of a textured horizontal yellow band 2 inches (51 mm) in width encircling the pole, and a 1-inch wide (25 mm) dark border band above and below this yellow band. Color coding should be placed immediately above the control button. Control buttons shall be located no higher than 48 inches (1219 mm) above the surface adjacent to the pole.*

1117B.5.10 Signs for text telephones. *Whenever signs shall refer to text telephones for people who are deaf or hard of hearing, the term "TTY" shall be used; the term "TDD" shall not be used.*

1117B.5.11 Cleaner air symbol. ***"****STRICTLY FOR PUBLICLY FUNDED FACILITIES OR ANY FACILITIES LEASED OR RENTED BY STATE OF CALIFORNIA. NOT CONCESSIONAIRES". This symbol shall be the standard used to identify a room, facility and paths of travel that are accessible to and usable by people who are adversely impacted by airborne chemicals or particulate(s) and/or the use of electrical fixtures and/or devices. When used, the symbol shall comply with Figure 11B-40.*

1117B.5.11.1 Color and size of symbol. *The symbol shall be used when the following minimum conditions are met. The symbol, which shall include the text "Cleaner Air" as shown, shall be displayed either as a negative or positive image within a square that is a minimum of 6 inches on each side. The symbol may be shown in black and white or in color. When color is used, it shall be Federal Blue (Color No. 15090 Federal Standard 595B) on white, or white on Federal Blue. There shall be at least a 70% color contrast between the background of the sign from the surface that it is mounted on.*

Strictly for publicly funded public facilities or any facilities leased or rented by State of California. Not concessionaires.
1117B.5.11.2 Conditions of use. *Use of the cleaner air symbol is voluntary. The cleaner air symbol shall be permitted for*

---

* In 1117B.5.8 (Symbols of Accessibility) the title of this section is incorrectly worded, which is causing misunderstanding regarding proper standard reference. Change title to read 'International Symbol of Accessibility.' This will be submitted for correction in Rulemaking.

use to identify a path of travel, and a room or a facility when the following is met.

1. *Floor or wall coverings, floor or wall covering adhesives, carpets, formaldehyde-emitting particleboard cabinetry, cupboards or doors have not been installed or replaced in the previous 12 months.*
2. *Incandescent lighting provided in lieu of fluorescent or halogen lighting, and electrical systems and equipment shall be operable by or on behalf of the occupant or user of the room, facility or path of travel.*

3. *Heating, ventilation, air conditioning and their controls shall be operable by or on behalf of the occupant or user.*

4. *To maintain "cleaner-air" designation only nonirritating, nontoxic products will be used in cleaning, maintenance, disinfection, pest management or for any minimal touch-ups that are essential for occupancy of the area. Deodorizers or Fragrance Emission Devices and Systems (FEDS) shall not be used in the designated area. Pest control practices for cleaner-air areas shall include the use of bait stations using boric acid, sticky traps and silicon caulk for sealing cracks and crevices. Areas shall be routinely monitored for pest problems. Additional nontoxic treatment methods, such as temperature extremes for termites, may be employed in the event of more urgent problems. These pest control practices shall not be used 48 hours prior to placement of the sign, and the facility shall be ventilated with outside air for a minimum of 24 hours following use or application.*

5. *Signage shall be posted requesting occupants or users not to smoke or wear perfumes, colognes or scented personal care products. Fragranced products shall not be used in the designated cleaner-air room, facility or path of travel.*

6. *A log shall be maintained on site, accessible to the public either in person or by telephone, e-mail, fax or other accessible means as requested. One or more individuals shall be designated to maintain the log. The log shall record any product or practice used in the cleaner-air designated room, facility or path of travel, as well as scheduled activities, that may impact the Cleaner-Air designation. The log shall also include the product label as well as the *material Safety Data Sheets (MSDS).*

1117B.5.11.3 Removal of symbol. *If the path of travel, room and/or facility identified by the cleaner air symbol should temporarily or permanently cease to meet the minimum conditions as set forth above, the cleaner air symbol shall be removed and shall not be replaced until the minimum conditions are again met.*

1117B.6 Controls and Operating Mechanisms. *See also Sections 210-7(g), 380-8(c) and *760-9, California Electrical Code, for electrical installation.*

1. General. *Controls and operating mechanisms required to be accessible by Section 101.17.11 shall comply with the requirements of this section.*

2. Clear floor space. *Clear floor space complying with Section 1118B.4 that allows a forward or parallel approach by a person using a wheelchair shall be provided at controls, dispensers, receptacles and other operable equipment.*

3. Height. *The highest operable part of all controls, dispensers, receptacles and other operable equipment shall be placed within at least one of the reach ranges specified in Sections 1118B.5 and 1118B.6. Electrical and communication system receptacles on walls shall be mounted no less than 15 inches (381 mm) above the floor.*

> ***EXCEPTION:*** *These requirements do not apply where the use of special equipment dictates otherwise or where electrical and communications systems receptacles are not normally intended for use by building occupants.*

4. Operation. *Controls and operating mechanisms shall be operable with one hand and shall not require tight grasping, pinching or twisting of the wrist. The force required to activate controls shall be no greater than 5 pounds (22.2 N) of force.*

---

* In 1117B.5.11.2 (Conditions of Use) #6 the first letters of each word referring to MSDS should all begin with capital letters.
* In 1117B.6 (Controls and Operating Mechanisms) the cross-reference to Section 760-9 is incorrect. Cross-reference should read 760-16. Footnotes will be submitted for correction in Rulemaking.

1117B.7 Automated Teller Machines and Point of Sale Machines.

1117B.7.1 Definitions.

1. AUTOMATED TELLER MACHINE (ATM) *means any electronic information processing device, including a point-of sale machine, used by a financial institution or other business entity and its customers for the primary purpose of executing financial transactions between itself and its customers. For the purposes of this section, automated teller machine includes point-of-sale machines used in grocery stores, ticket sales facilities, and other business entities, but does not include card-reading-devices located on fuel pump islands at gasoline service stations and motor-vehicle fuel facilities.*

2. ATM SITE *means that immediate area which is within or made or to be made part of an existing building or a building to be constructed, and to which one or more ATMs is or shall be affixed.*

3. ATM INSTALLATION *means a single ATM structurally affixed to a building or other structure.*

1117B.7.2 General. *Where ATMs are provided for the public, they shall comply with this section.*

> ***EXCEPTIONS:***
> ***1.*** *In grocery stores and other retail outlets with point-of-sale machines located at individual check stands, machines that are located at accessible check stands must be made accessible. Where machines are located away from individual check stands, they must all be made accessible.*
>
> ***2.*** *Where the enforcing agency determines that compliance with this regulation would create an unreasonable hardship, an exception may be granted when equivalent facilitation is provided through the use of other methods or materials.*
>
> ***3.*** *In existing buildings, these regulations shall not apply when legal or physical constraints would not allow compliance with these regulations or equivalent facilitation without creating an unreasonable hardship. See Section 101.17.11, **Item 4.*
>
> ***4.*** *Drive-up-only automated teller machines are not required to comply with this section.*
>
> ***5.*** *Card reading devices located on fuel pump islands at gasoline service stations and motor-vehicle fuel facilities are not required to comply with Sections 1114B through 1126B and all subsections there under.*

1117B.7.3 Controls. *Controls for user activation shall comply with the requirements of Section 1117B.6, Item 4, which states that controls and operating mechanisms shall be operable with one hand and shall not require tight grasping, pinching or twisting of the wrist. The force required to activate controls shall be no greater than 5 pounds (22.2 N) of force.*

1117B.7.4 Clearances and reach range. *Free-standing or built-in units not having a clear space under them shall comply with the following as to clearance and reach range.*

1117B.7.4.1 Where one ATM is provided. *Where one ATM is provided at a location, it shall meet the specifications of Section 4.34 of the Americans with Disabilities Act Accessibility Guide lines (ADAAG) as follows:*

> ***1.*** *The ATM shall be located so that clear floor space complying with Section 1118B.4 is provided to allow a person using a wheelchair to make a forward approach, a parallel approach, or both, to the machine.*
>
> ***2. Forward approach only.*** *If only a forward approach is possible, operable parts of all controls shall be placed within the forward reach range specified in Section 1118B.5.*
>
> ***3. Parallel approach only.*** *If only a parallel approach is possible, operable parts of controls shall be placed as follows:*
>
> > ***3.1*** *Reach* ***depth not more than 10 inches (254 mm).*** *Where the reach depth to the operable parts of all controls as measured from he vertical plane perpendicular to the edge of the unobstructed clear floor space at the farthest protrusion of the automated teller machine or surround is not more than 10 inches (254 mm), the maximum height from the floor shall be 54 inches (1372 mm).*
> >
> > ***3.2 Reach depth more than 10 inches (254 mm).*** *Where the reach depth to the operable parts of any*

** In 1117B.7.2 (General) in Exception 3 the cross-reference to Section 101.17.11, Item 4 is incorrect. Cross-reference should read Item 5. This will be submitted for correction in Rulemaking.

control as measured from the vertical plane perpendicular to the edge of the unobstructed clear floor space at the farthest protrusion of the ATM or surround is more than 10 inches (254 mm), the maximum height from the floor shall be as shown in Table 11B-5.

4. Forward and parallel approach. *If both a forward and parallel approach are possible, operable parts of controls shall be placed within at least one of the reach ranges in Item 2 or 3.*

5. Bins. *Where bins are provided for envelopes, waste paper, or other purposes, at least one of each type provided shall comply with the applicable reach ranges in Item 2, 3 or 4.*

> ***EXCEPTION:*** *Where a function can be performed in a substantially equivalent manner by using an alternate control, only one of the controls needed to perform that function is required to comply with this section. If the controls are identified by tactile markings, such markings shall be provided on both controls.*

1117B.7.4.2 Where two ATMs are provided. *Where two ATMs are provided at a location, one shall comply with Section 1117B.7.4.1, except that the highest operable part shall be 48 inches (1219 mm) maximum. The second ATM is not regulated as to height, including height of display.*

1117B.7.4.3 Where three or more ATMs are provided. *Where three or more ATMs are provided, two shall be used to satisfy Section 1117B.7.4.2, above. For the additional ATMs beyond the first two, at least 50 percent shall comply with Section 1117B.7.4.1. The remainder are not regulated as to height, including height of display. If features provided differ from ATM to ATM, all features shall be equally represented among the accessible ATMs.*

1117B.7.5 Display. *LED, cathode ray, or other screen devices intended to be viewed by the user shall be positioned so they are readily visible to and usable by a person sitting in a wheelchair with approximate eye level of 45 inches (1143 mm), and shall comply with the following requirements:*

> ***NOTE:*** *Automated teller machines allowed to be unregulated as to height in Sections 1117B.7.4 through 1117B.7.4.3 above are also exempt from this section.*

1. Vertically mounted screen devices. *If mounted vertically or tipped no more than 30 degrees away from the viewer, the center line of screens and other screen devices shall be located a maximum of 52 inches (1321 mm) above grade.*

2. Angle-mounted screen devices. *If mounted at an angle between 30 degrees and 60 degrees tipped away from the viewer, the center line of screens and other screen devices shall be located a maximum of 44 inches (1118 mm) above grade.*

3. Horizontally mounted screen devices. *If mounted at an angle between 60 degrees and 90 degrees tipped away from the viewer, the center line of screens and other screen devices shall be located a maximum of 34 inches (864 mm) above grade.*

TABLE 11B-5 – MAXIMUM REACH DEPTH FOR AUTOMATED TELLER MACHINES

REACH DEPTH (X) (Inches)	MAXIMUM HEIGHT (Y) (Inches)
× 25.4 for mm	
10	54
11	53.5
12	53
13	52.5
14	51.5
15	51
16	50.5
17	50
18	49.5
19	49
20	48.5
21	47.5
22	47
23	46.5
24	46

NOTE: *See *Figure 11B-5D (d).*

1117B.7.6 ATM equipment for persons with vision impairments. *Instructions and all information for use shall be made accessible to and independently usable by persons with vision impairments.*

SECTION 1118B – SPACE ALLOWANCE AND REACH RANGES

1118B.1 Wheelchair Passage Width. *The minimum clear width for single wheelchair passage shall be 32 inches (813 mm) at a point and 36 inches (914 mm) continuously. See Figure 11B-12.*

1118B.2 Width for Wheelchair Passing. *The minimum width for two wheelchairs to pass is 60 inches (1524 mm). See Figure 11B-12.*

1118B.3 Wheelchair Turning Space. *The space required for a wheelchair to make a 180 degree turn is a clear space of 60 inches (1524 mm) diameter [see Figure 11B-12 (a)] or a T-shaped space. See Figure 11B-12 (b).*

1118B.4 Clear Floor or Ground Space for Wheelchairs.

1. Size and approach. *The minimum clear floor or ground space required to accommodate a single, stationary wheelchair and occupant is 30 inches by 48 inches (762 mm by 1219 mm). The minimum clear floor or ground space for wheelchairs may be positioned for forward or parallel approach to an object. Clear floor or ground space for wheelchairs may be part of the knee space required under some objects. See Figure 11B-5A.*

2. Relationship of maneuvering clearances to wheelchair spaces. *One full unobstructed side of the clear floor or ground space for a wheelchair shall adjoin or overlap an accessible route or adjoin another wheelchair clear floor space. If a clear floor space is located in an alcove or otherwise confined on all or a part of three sides, additional maneuvering clearances shall be provided as shown in Figure 11B-5A (b). See Figure 11B-5A.*

1118B.5 Forward Reach. *If the clear floor space allows only forward approach to an object, the maximum high forward reach allowed shall be 48 inches (1219 mm) [see Figure 11B-5C (b)]. The minimum low forward reach is 15 inches (381 mm). If the high forward reach is over an obstruction, reach and clearances shall be as shown in Figure 11B-5C (a).*

1118B.6 Side reach. *If the clear floor space allows parallel approach by a person in a wheelchair, the maximum high side reach allowed shall be 54 inches (1372 mm) and the low side reach shall be no less than 9 inches (229 mm) above the floor [see Figure 11B-5D (a) and (b)]. If the side reach is over an obstruction, the reach and clearances shall be as shown in Figure 11B-5D (c). See Figure 11B-5D.*

---

* In the Note below Table 11B-5 (Maximum Reach Depth for Automated Teller Machines) the cross-reference to Figure 11B-5D(d) is incorrect. Cross-reference should read Figure 11B-5F(d). This will be submitted for correction in Rulemaking.

SECTION 1119B – SPECIAL STANDARDS OF ACCESSIBILITY FOR BUILDINGS WITH HISTORICAL SIGNIFICANCE

See Section 1135B.

SECTION 1120B – FLOORS AND LEVELS

1120B.1 Floors Within Each Story. *In buildings and facilities, floors of a given story shall be a common level throughout, or shall be connected by pedestrian ramps, passenger elevators or special access lifts.*

> ***EXCEPTIONS:***
> ***1.*** *In existing buildings, other than dining banquet and bar facilities, when the enforcing agency determines that compliance with this section would create an unreasonable hardship, an exception shall be granted when equivalent facilitation is provided.*
>
> ***2.*** *In existing dining, banquet and bar facilities, when the enforcing agency determines that compliance with this section would create an unreasonable hardship, an exception shall be granted provided that a minimum of 75 percent of the dining, banquet and bar area shall be a common level throughout or shall be connected by pedestrian ramps, passenger elevators or special lifts. See Section 101.17.11, Item 1.4, for new buildings only.*
>
> ***3.*** *In existing buildings, this section shall not apply when legal or physical constraints would not allow compliance with this section or equivalent facilitation without creating an unreasonable hardship. See Section 101.17.11, *Item 4.*
>
> ***4.*** *Where specifically exempted in other portions of this code.*

1120B.2 Floor Surface. *The surface of floors shall be slip resistant and shall comply with Section 1124B.*

SECTION 1121B – RESERVED

SECTION 1122B – FIXED OR BUILT-IN SEATING, TABLES, AND COUNTERS

1122B.1 Minimum Number. *Where fixed or built-in seating, tables, or counters are provided for the public, and in general employee areas, 5 percent, but never less than one, must be accessible as provided in this section.*

1122B.2 Seating. *If seating spaces for persons in wheelchairs are provided at fixed tables or counters, clear floor space complying with Section 1118B.4 shall be provided. Such clear floor space shall not overlap knee space by more than 19 inches (483 mm) (see Figure 11B-13).*

1122B.3 Knee Clearance. *If seating for persons in wheelchairs is provided at fixed tables or counters, knee spaces at least 27 inches (686 mm) high, 30 inches (762 mm) wide and 19 inches (483 mm) deep shall be provided (see Figure 11B-13).*

> ***EXCEPTION:*** *Knee clearance is not required at checkout counters or service counters.*

1122B.4 Height of Work Surfaces. *The tops of tables and counters shall be 28 inches to 34 inches (711 mm to 864 mm) from the floor or ground.*

Where a single counter contains more than one transaction station, such as (but not limited to) a bank counter with multiple teller windows or a retail sales counter with multiple cash register stations, at least 5 percent, but never less than one, of each type of station shall be located at a section of counter that is at least 36 inches (914 mm) long and no more than 28 to 34 inches (711 to 864 mm) high.

---

* In 1120B.1 (Floors Within Each Story) in Exception 3 the cross-reference to 'Section 101.17.11, Item 4' is incorrect. Cross-reference should read Item 5. This will be submitted for correction in Rulemaking.

SECTION 1123B – ACCESS TO EMPLOYEE AREAS

1123B.1 General. *Employee areas shall conform to all requirements of Division of the State Architect/Access Compliance in the California Building Code, Plumbing Code and Electrical Code.*

1123B.2 Work Stations. *Specific work stations need only comply with aisle width (Sections 1133B.6.1 and 1133B.6.2) and floors and levels (Section 1120B), and entryways shall be 32 inches (813 mm) in clear width.*

> ***EXCEPTION:*** *Accessibility is not required to (1) observation galleries used primarily for security purposes; or (2) in nonoccupiable spaces accessed only by ladders, catwalks, crawl spaces, very narrow passageways, or freight (nonpassenger) elevators, and frequented only by service personnel for repair purposes; such spaces include, but are not limited to, elevator pits, elevator penthouses, mechanical rooms, piping or equipment catwalks.*

SECTION 1124B – GROUND AND FLOOR SURFACES

1124B.1 General. *Ground and floor surfaces along accessible routes and in accessible rooms and spaces, including floors, walks, ramps, stairs and curb ramps, shall be stable, firm, slip resistant, and shall comply with this section.*

1124B.2 Changes in Level. *Changes in level up to 1/4 inch (6 mm) vertical and without edge treatment [see Figure 11B-5E (c) and (d)]. Changes in level between 1/4 inch (6 mm) and 1/2 inch (12.7 mm) shall be accomplished by means of a ramp that complies with Figure 11B-5E (d).*

1124B.3 Carpet. *If carpet or carpet tile is used on a ground or floor surface, then it shall be securely attached; have a firm cushion, pad or backing or no cushion or pad; and have a level loop, textured loop; level-cut pile, or level-cut/uncut pile texture. The maximum pile height shall be 1/2 inch (12.7 mm). Exposed edges of carpet shall be fastened to floor surfaces and have trim along the entire length of the exposed edge. Carpet edge trim shall comply with Section 1124B.2.*

1124B.4 Gratings. *If gratings are located in walking surfaces, then they shall have spaces no greater than 1/2 inch (12.7 mm) wide in one direction (see Figure 11B-7B). If gratings have elongated openings, then they shall be placed so that the long dimension is perpendicular to the dominant direction of travel (see Figure 11B-7B).*

SECTION 1125B – STORAGE

1125B.1 General. *If fixed storage facilities such as cabinets, shelves, closets or drawers are provided where access is required by Section 101.17.11, at least one of each type shall comply with this section. Additional storage may be provided outside of the reach ranges shown in Figure 11B-5D.*

1125B.2 Clear Floor Space. *A clear floor space at least 30 inches by 48 inches (762 mm by 1219 mm) complying with Section 1118B.4 that allows either a forward or parallel approach by a person using a wheelchair shall be provided at accessible storage facilities.*

1125B.3 Height. *Accessible storage spaces shall be within at least one of the reach ranges specified in Sections 1118B.5 and 1118B.6. Clothes rods shall be a maximum of 54 inches (1372 mm) from the floor for a side approach (See Figure 11B-5D). Where the distance from the wheelchair to the clothes rod or shelf exceeds 10 inches (254 mm), as in closets without accessible doors, the height and depth to the rod or shelf shall comply with Figure 11B-5D.*

1125B.4 Hardware. *Hardware for accessible storage facilities shall comply with Section 1117B.6. Touch latches and U-shaped pulls are acceptable.*

SECTION 1126B – VENDING MACHINES *Install vending machines in compliance with Section 1117B.6, "Controls and Operating Mechanisms."*

Division II – SITE ACCESSIBILITY

SECTION 1127B – EXTERIOR ROUTES OF TRAVEL

1127B.1 General. *Site development and grading shall be designed to provide access to all entrances and exterior ground floor exits, and access to normal paths of travel, and where necessary to provide access, shall incorporate pedestrian ramps, curb ramps, etc. When more than one building or facility is located on a site, accessible routes of travel shall be provided between buildings and accessible site facilities. The accessible route of travel shall be the most practical direct route between accessible building entrances, accessible site facilities and the accessible entrance to the site.*

> ***EXCEPTIONS:***
> ***1.*** *Where the enforcing agency determines that compliance with these regulations would create an unreasonable hardship because of topography, natural barriers, etc., an exception may be granted when equivalent facilitation is provided through the use of other methods and materials.*
>
> ***2.*** *In existing buildings, this section shall not apply in those conditions where, due to legal or physical constraints, the site of the project would not allow compliance with these regulations or equivalent facilitation without creating an unreasonable hardship.*
>
> ***NOTE:*** *See Section 101.17.11, *Item 4.*

1127B.2 Design and Construction. *When accessibility is required by this section, it shall be designed and constructed in accordance with this Building Code. See Section 1114B.1 for a list of applicable sections.*

1127B.3 Signs. *At every primary public entrance and at every major junction along or leading to an accessible route of travel, there shall be a sign displaying the international symbol of accessibility. Signs shall indicate the direction to accessible building entrances and facilities and shall comply with the requirements found in Sections 1117B.5 through 1117B.5.9.*

1127B.4 Outside Stairways. *Where stairways occur outside a building, refer to Sections 1006.17 of the 1995 California Building Code, 1120A.4.3 and 1133B.4.4.*

1127B.5 Curb Ramps.

1. General. *Curb ramps shall be constructed at each corner of street intersections and where a pedestrian way crosses a curb. The preferred and recommended location for curb ramps is in the center of the crosswalk of each street corner. Where it is necessary to locate a curb ramp in the center of the curb return and the street surfaces are marked to identify pedestrian crosswalks, the lower end of the curb ramp shall terminate within such crosswalk areas. See Figure 11B-20C, Case E.*

2. Width of curb ramps. *Curb ramps shall be a minimum of 4 feet (1219 mm) in width and shall lie, generally, in a single sloped plane, with a minimum of surface warping and cross slope.*

3. Slope of curb ramps. *The slope of curb ramps shall not exceed 1 unit vertical to 12 units horizontal (8.33% slope). Transitions from ramps to walks, gutters, or streets shall be flush and free of abrupt changes, except that curb ramps shall comply with Item 5 below. Maximum slopes of adjoining gutters, road surface immediately adjacent to the curb ramp, or accessible route shall not exceed 1 unit vertical to 20 units horizontal (5% slope) within 4 feet (1219 mm) of the top and bottom of the curb ramp. The slope of the fanned or flared sides of curb ramps shall not exceed 1 unit vertical to 10 units horizontal (10% slope).*

4. Level landing. *A level landing 4 feet (1219 mm) deep shall be provided at the upper end of each curb ramp over its full width to permit safe egress from the ramp surface, or the slope of the fanned or flared sides of the curb ramp shall not exceed 1 unit vertical to 12 units horizontal (8.33% slope).*

5. Beveled lip. *The lower end of each curb ramp shall have a 1/2 inch (13 mm) lip beveled at 45 degrees as a detectable way finding edge for persons with visual impairment.*

---

* In 1127B.1 (General) in the Note the cross-reference to 'Section 101.17.11, Item 4' is incorrect. Cross-reference should read Item 5. This will be submitted for correction in Rulemaking.

6. Finish. *The surface of each curb ramp and its flared sides shall be stable, firm and slip-resistant and shall be of contrasting finish from that of the adjacent sidewalk.*

7. Border. *All curb ramps shall have a grooved border 12 inches (305 mm) wide at the level surface of the sidewalk along the top and each side approximately 3/4 inch (19 mm) on center. All curb ramps constructed between the face of the curb and the street shall have a grooved border at the level surface of the sidewalk. See Figures 11B-19A and 11B-19B.*

8. Detectable warnings. *A curb ramp shall have a detectable warning that extends the full width and depth of the curb ramp inside the grooved border when the ramp slope is less than 1 unit vertical to 15 units horizontal (6.7% slope). Detectable warnings shall consist of raised truncated domes with a diameter of nominal 0.9 inch (22.9 mm) at the base tapering to 0.45 inch (11.4 mm) at the top, a height of nominal 0.2 inch (5.08 mm) and a center-to-center spacing of nominal 2.35 inches (59.7 mm) in compliance with Figure 11B-23A. "Nominal" here shall be in accordance with Section 12-11A and B-102, State Referenced Standards Code. The detectable warning shall contrast visually with adjoining surfaces, either light-on-dark or dark-on-light. The material used to provide contrast shall be an integral part of the walking surface. The domes may be constructed in a variety of methods, including cast in place or stamped, or may be part of a prefabricated surface treatment.*

Only approved DSA/AC detectable warning products and directional surfaces shall be installed as provided in the California Code of Regulations (CCR), Title 24, Part 1, Articles 2, 3 and 4. Refer to CCR Title 24, Part 12, Chapter 12-11A and B, for building and facility access specifications for product approval for detectable warning products and directional surfaces.

> ***NOTE:*** *Detectable warning products and directional surfaces installed after January 1, 2001, shall be evaluated by an independent entity, selected by the Department of General Services, Division of the State Architect-Access Compliance for all occupancies, including transportation and other outdoor environments, except that when products and surfaces are for use in residential housing evaluation shall be in consultation with the Department of Housing and Community Development. See Government Code Section 4460.*

9. Obstructions. *Curb ramps shall be located or protected to prevent their obstruction by parked cars.*

10. Diagonal curb ramps. *If diagonal (or corner-type) curb ramps have returned curbs or other well-defined edges, such edges shall be parallel to the direction of pedestrian flow. The bottom of diagonal curb ramps shall have 48 inches (1219 mm) minimum clear space as shown in Figure 11B-22 (c) and (d). If diagonal curb ramps are provided at marked crossings, the 48-inch (1219 mm) clear space shall be within the markings (see Figure 11B-20B, Cases C and D). If diagonal curb ramps have flared sides, they shall also have at least a 24-inch-long (610 mm) segment of straight curb located on each side of the curb ramp and within the marked crossing [see Figure 11B-22 (c)].*

> ***NOTES:***
> ***1.*** *For additional curb details, see Figures 11B-19A and 11B-19B.*
>
> ***2.*** *If distance from curb to back of sidewalk is too short to accommodate ramp and a 4-foot (1219 mm) platform as in Figure 11B-20A,Case A, the side walk may be depressed longitudinally as in Figure 11B-20A, Case B, or Figure 11B-20B, Case C, or may be widened as in Figure 11B-20B, Case D.*
>
> ***3.*** *If sidewalk is less than 5 feet (1524 mm) wide, the full width of the sidewalk shall be depressed as shown in Figure 11B-20B, Case C.*
>
> ***4.*** *As an alternate to Figure 11B-20A, Case A, one ramp may be placed in the center of the curb return as in Figure 11B-20C, Case E.*
>
> ***5.*** *When ramp is located in center of curb return, crosswalk configuration must be similar to that shown on the plan to accommodate wheelchairs. (See Figure 11B-22.)*
>
> ***6.*** *If planting area width is equal to or greater than ramp length, ramp side slope distance equals 3 feet (914 mm). (See Figure 11B-20D, Case G.)*
>
> ***7.*** *For Figure 11B-20C, Case F and Figure 11B-20D, Case G, the longitudinal portion of the sidewalk may need to be depressed as shown in Figure 11B-20A, Case B.*
>
> ***8.*** *If located on a curve, the sides of the ramp need not be parallel, but the minimum width of the ramp shall be 4 feet (1219 mm).*
>
> ***9.*** *The ramp shall have a 12 inch-wide (305 mm) border with 1/4 inch (6 mm) grooves approximately 3/4 inch (19 mm) on center. See grooving detail, Figure 11B-20 D, Case H.*

SECTION 1128B – PEDESTRIAN GRADE SEPARATIONS (OVERPASSES AND UNDERPASSES)

Pedestrian ramps on pedestrian grade separations shall comply with the requirements of Section 1133B.5 for ramps.

Cross slopes of walking surfaces shall be the minimum possible and shall not exceed 1/4 inch (6 mm) per foot (2.083% gradient). The slope of any appreciably warped walking surface shall not exceed 1 unit vertical in 12 units horizontal (8.33% slope) in any direction. Where pedestrian grade separations cross streets or other vehicular traffic ways, and where a street level crossing can reasonably and safely be used by persons with physical disabilities, there shall be provided conforming curb ramps and a usable pathway.

> ***EXCEPTIONS:***
> ***1.*** *When the grade differential of the walking surface of a pedestrian grade separation exceeds 14 feet (4267 mm) due to required height clearance and grade conditions, and the enforcing agency finds that because of right-of-way restrictions, topography or natural barriers, wheelchair accessibility or equivalent facilitation would create an unreasonable hardship, such accessibility need not be provided. However, the requirements in these regulations relating to other types of mobility shall be complied with.*
>
> ***2.*** *For existing facilities, this section shall not apply where, due to legal or physical constraints, the site of the project will not allow compliance with these regulations or equivalent facilitation without creating an unreasonable hardship.*
>
> ***NOTE:*** *See Section 101.17.11, *Item 4.*

SECTION 1129B – ACCESSIBLE PARKING REQUIRED

1129B.1 General. *Each lot or parking structure where parking is provided for the public as clients, guests or employees, shall provide accessible parking as required by this section. Accessible parking spaces serving a particular building shall be located on the shortest accessible route of travel from adjacent parking to an accessible entrance. In parking facilities that do not serve a particular building, accessible parking shall be located on the shortest accessible route of travel to an accessible pedestrian entrance of the parking facility. In buildings with multiple accessible entrances with adjacent parking, accessible parking spaces shall be dispersed and located closest to the accessible entrances. Table 11B-6 establishes the number of accessible parking spaces required.*

> ***EXCEPTION:*** *This subsection shall not apply to existing facilities where compliance with local ordinances precludes satisfying the above requirements or of providing equivalent facilitation unless a change of occupancy occurs.*

1129B.2 Less Than Five Spaces. *When less than five parking spaces are provided at buildings and facilities subject to these regulations, one shall be 14 feet (4267 mm) wide and lined to provide a 9-foot (2743 mm) parking area and a 5-foot (1524 mm) loading and unloading area. However, there is no requirement that the space be reserved exclusively or identified for use by persons with disabilities only.*

1129B.3 Medical Care Outpatient Facilities. *At facilities providing medical care and other services for persons with mobility impairments, parking spaces complying with this section shall be provided in accordance with Table 11B-6 except as follows:*

1. Outpatient units and facilities. *Ten percent of the total number of parking spaces provided serve each such outpatient unit or facility.*

2. Units and facilities that specialize in treatment or services for persons with mobility impairments. *Twenty percent of the total number of parking spaces provided serve each such unit or facility.*

---

* In 1128B (Pedestrian Grade Separations (Overpasses and Underpasses)) in the Note the cross-reference to 'Section 101.17.11, Item 4' is incorrect. Cross-reference should read Item 5. This will be submitted for correction in Rulemaking.

TABLE 11B-6 – SPACES REQUIRED
Establishes the number of accessible parking spaces required.

TOTAL NUMBER OF PARKING SPACES IN LOT OR GARAGE	MINIMUM REQUIRED NUMBER OF SPACES
1-25	1
26-50	2
51-75	3
76-100	4
101-150	5
151-200	6
201-300	7
301-400	8
401-500	9
501-1,000	*
1,001 and over	**

*Two percent of total.
**Twenty plus one for each 100, or fraction over 1,001.

1129B.4 Parking Space Size. *Accessible parking spaces shall be located as near as practical to a primary entrance and shall be sized as follows:*

1. Dimensions. *Where single spaces are provided, they shall be 14 feet (4267 mm) wide and outlined to provide a 9-foot (2743 mm) parking area and a 5-foot (1524 mm) loading and unloading access aisle on the passenger side of the vehicle. When more than one space is provided in lieu of providing a 14-foot-wide (4267 mm) space for each parking space, two spaces can be provided within a 23-foot-wide (7010 mm) area lined to provide a 9-foot (2743 mm) parking area on each side of a 5-foot (1524 mm) loading and unloading access aisle in the center. The minimum length of each parking space shall be 18 feet (5486 mm). The words NO PARKING shall be painted on the ground within each five-foot (1524 mm) loading and unloading access aisle. This notice shall be painted in white letters no less than 12 inches (154 mm) high and located so that it is visible to traffic enforcement officials. See Figure 11B-18A.*

2. Van space(s). *One in every eight accessible spaces, but not less than one, shall be served by an access aisle 96 inches (2438 mm) wide minimum placed on the side opposite the driver's side when the vehicle is going forward into the parking space and shall be designated van accessible as required by Section 1129B.5. All such spaces may be grouped on one level of a parking structure. The words NO PARKING shall be painted on the ground within each eight-foot (2438 mm) loading and unloading access aisle. This notice shall be painted in white letters no less than 12 inches (154 mm) high and located so that it is visible to traffic enforcement officials. See Figure 11B-18B.*

3. Arrangement of parking space. *In each parking area, a bumper or curb shall be provided and located to prevent encroachment of cars over the required width of walkways. Also, the space shall be so located that persons with disabilities are not compelled to wheel or walk behind parked cars other than their own. Pedestrian ways which are accessible to persons with disabilities shall be provided from each such parking space to related facilities, including curb cuts or ramps as needed. Ramps shall not encroach into any accessible parking space or the adjacent access aisle. This maximum cross slope in any direction of an accessible parking space and adjacent access aisle shall not exceed 2%.*

EXCEPTIONS: *See Figures 11B-18A through 11B-18C.*

1. *Where the enforcing agency determines that compliance with any regulation of this section would create an unreasonable hardship, a variance or waiver may be granted when equivalent facilitation is provided.*

2. *Parking spaces may be provided which would require a person with a disability to wheel or walk behind other than accessible parking spaces when the enforcing agency determines that compliance with these regulations or providing equivalent facilitation would create an unreasonable hardship.*

NOTE: *See Section 101.17.11, *Item 4.*

* In 1129B.4 (Parking Space Size) #3 in the Note, the cross-reference to 'Section 101.17.11, Item 4' is incorrect. Cross-reference should read Item 5. This will be submitted for correction in Rulemaking.

4. Slope of parking space. *Surface slopes of accessible parking spaces shall be the minimum possible and shall not exceed 1 unit vertical to 50 units horizontal (2% slope) in any direction.*

1129B.5 Identification of Parking Spaces for Off-Street Parking Facilities. *Each parking space reserved for persons with disabilities shall be identified by a reflectorized sign permanently posted immediately adjacent to and visible from each stall or space, consisting of a profile view of a wheelchair with occupant in white on dark blue background. The sign shall not be smaller than 70 square inches (4516 mm2) in area and, when in a path of travel, shall be posted at a minimum height of 80 inches (2032 mm) from the bottom of the sign to the parking space finished grade. Signs may also be centered on the wall at the interior end of the parking space at a minimum height of 36 inches (914 mm) from the parking space finished grade, ground or sidewalk. Spaces complying with Section 1129B.4, Item 2 shall have an additional sign stating "Van-Accessible" mounted below the symbol of accessibility.*

An additional sign shall also be posted in a conspicuous place at each entrance to off-street parking facilities, or immediately adjacent to and visible from each stall or space. The sign shall not be less than 17 inches by 22 inches (432 mm by 559 mm) in size with lettering not less than 1 inch (25 mm) in height, which clearly and conspicuously states the following:

*"Unauthorized vehicles parked in designated accessible spaces not displaying distinguishing placards or license plates issued for persons with disabilities may be towed away at owner's expense. Towed vehicles may be reclaimed at _ or by telephoning _ _ _ _ _ _ _ _ _ _ _ _ _ _ _ _ _ _ _

2. Vertical Clearance. *Provide minimum vertical clearance of 114 inches (2896 mm) at accessible passenger loading zones and along at least one vehicle access route to such areas from site entrances and exits.*

1131B.3 Valet Parking. *Valet parking facilities shall provide a passenger loading zone complying with Section 1131B.2 above and shall be located on an accessible route to the entrance of the facility. The parking space requirements of Sections 1129B through 1130B apply to facilities with valet parking.*

1131B.4 Bus Stop Pads and Shelters. *Where provided, provide bus stop pads 96 inches (2438 mm) long (measured parallel to curb or road edge) to the maximum extent allowed by legal or site constraints. Bus stop pads shall connect to an accessible route. Newly constructed bus stop pads must provide a square curb surface between the pad and road or other detectable warning in accordance with Section 1133B.8.5.*

> ***NOTE:*** *Detectable warning products and directional surfaces installed after January 1, 2001, shall be evaluated by an independent entity, selected by the Department of General Services, Division of the State Architect-Access Compliance, for all occupancies, including transportation and other outdoor environments, except that when products and surfaces are used in residential housing evaluation shall be in consultation with the Department of Housing and Community Development. See Government Code Section 4460.*

Bus stop pads shall be at same slope as roadway in the direction parallel to roadway, and maximum 2 percent slope perpendicular to roadway.

Where provided, provide bus stop shelters installed so as to permit a wheelchair user to enter the shelter and access a clear floor area of 30 by 48 inches (762 mm by 1219 mm), completely within the shelter. Bus stop shelters shall connect to an accessible route and to bus stop pads. Only approved DSA/AC detectable warning products and directional surfaces shall be installed as provided in the California Code of Regulations (CCR), Title 24, Part 1, Articles 2, 3 and 4. Refer to CCR Title 24, Part 12, Chapter 12-11A and B, for building and facility access specifications for product approval for detectable warning products and directional surfaces.

> ***NOTE:*** *Detectable warning products and directional surfaces installed after January 1, 2001, shall be evaluated by an independent entity, selected by the Department of General Services, Division of the State Architect-Access Compliance, for all occupancies, including transportation and other outdoor environments, except that when products and surfaces are for use in residential housing, evaluation shall be in consultation with the Department of Housing and Community Development. See Government Code Section 4460.*

SECTION 1132B – OUTDOOR OCCUPANCIES

1132B.1 General. *Outdoor occupancies shall be accessible as required in this chapter. See also the general requirements listed in Section 1114B.1.1.*

1132B.2 Parks and Recreational Areas. *The following parks and recreational areas shall comply with these regulations.*

> ***EXCEPTIONS:***
> ***1.*** *In existing buildings, when the enforcing agency determines that compliance would create an unreasonable hardship, a variance shall be granted when equivalent facilitation is provided.*
>
> ***2.*** *Where the enforcing agency finds that, in specific areas, the natural environment would be materially damaged by compliance with these regulations, such areas shall be subject to these regulations only to the extent that such material damage would not occur.*
>
> ***3.*** *Automobile access shall not be provided or paths of travel shall not be made accessible when the enforcing agency determines that compliance with these regulations would create an unreasonable hardship.*

1. Campsites. *Campsites, a minimum of two and no fewer than three for each 100 campsites provided, shall be accessible by level path or ramp and shall have travel routes with slopes not exceeding 1 unit vertical in 12 units horizontal (8.33% slope) to sanitary facilities. Permanent sanitary facilities serving campgrounds shall be accessible to wheelchair occupants.*

2. Beaches, picnic areas. *Beaches, picnic areas, day-use areas, vista points and similar areas shall be accessible.*

3. Sanitary facilities. *Sanitary facilities, to the extent that such facilities are provided, each public use area that is accessible to wheelchair occupants by automobile, walks or other paths of travel.*

4. Boat docks. *Boat docks, fishing piers, etc., shall be accessible.*

5. Parking lots. *Parking lots shall be provided with accessible parking spaces and with curb cuts leading to all adjacent walks, paths or trails.*

6. Trails and paths. *Trails, paths and nature walk areas, or portions of these, shall be constructed with gradients which will permit at least partial use by wheelchair occupants. Hard surface paths or walks shall be provided to serve buildings and other functional areas.*

7. Nature trails. *Nature trails and similar educational and informational areas shall be accessible to the blind by the provision of rope guidelines, raised Arabic numerals and symbols for identification, information signs, and related guide and assistance devices.*

NOTE: *For museums, orientation buildings, visitor centers, office buildings, retail stores, restaurants, etc., and sanitary facilities serving these uses, see Sections 1104B through 1111B and sections listed in Section 1114B.1.1.*

1132B.3 Highway Rest Areas. *The specific standards of accessibility for highway rest areas and similar facilities shall be as follows in Section 1132B.3.1, subject to other provisions in these regulations.*

1132B.3.1 Permanent facilities. *At least one kind of permanent functional area or facility, as applicable, shall be accessible to persons with disabilities, including:*

1. *A sanitary facility for each sex.*

2. *At least one picnic table and one additional table for each 20 tables, or fraction thereof provided.*

3. *Information and display areas.*

4. *Drinking fountains.*

5. *At least one parking space.*

6. *Curb ramps conforming to Section 1127B.5 shall be provided at pedestrian ways where appropriate.*

Division III -- ACCESSIBILITY FOR ENTRANCES, EXITS AND PATHS OF TRAVEL

This division includes additional requirements which supersede less restrictive requirements in Chapter 10 where access is required.

SECTION 1133B – GENERAL ACCESSIBILITY FOR ENTRANCES, EXITS AND PATHS OF TRAVEL

1133B.1 Building Accessibility. *See this chapter.*

1133B.1.1 Entrances.

1133B.1.1.1 Entrances *and exterior ground floor exit doors.*

1133B.1.1.1.1 All *entrances and exterior ground-floor exit doors to buildings and facilities shall be made accessible to persons with disabilities. Doorways shall have a minimum clear opening of 32 inches (813 mm) with the door open 90 degrees, measured between the face of the door and the opposite stop. Openings more than 24 inches (610 mm) in depth shall comply with Sections 1118B.1 and 1118B.2.*

> ***EXCEPTIONS:***
> ***1.*** *Exterior ground-floor exits serving smoke-proof enclosures, stairwells and exit doors servicing stairs only need not be made accessible.*
>
> ***2.*** *Exits in excess of those required by Section 1114B.2.1, and which are more than 24 inches (610 mm) above grade are not required to be accessible. Such doors shall have signs warning that they are not accessible. Warning signs shall comply with Section 1117B.5.*
>
> ***3.*** *In existing buildings where the enforcing agency determines that compliance with the building standards of this section would create an unreasonable hardship, an exception shall be granted when equivalent facilitation is provided. Equivalent facilitation would require at least one entrance to be accessible to and usable by persons with disabilities.*
>
> ***4.*** *These building standards shall not apply to existing buildings when legal or physical constraints will not allow compliance with these building standards or equivalent facilitation without creating an unreasonable hardship. See Section 101.17.11, *Item 4, Special Conditions for Persons with Disabilities Requiring Appeals Action Ratification.*

1133B.1.1.1.2 Temporary restrictions. *During periods of partial or restricted use of a building or facility, the entrances used for primary access shall be accessible to and usable by persons with disabilities.*

1133B.1.1.1.3 Recessed doormats. *Recessed doormats shall be adequately anchored to prevent interference with wheelchair traffic.*

1133B.1.1.1.4 Gates. *All gates, including ticket gates, shall meet all applicable specifications for doors.*

1133B.2 Doors.

1133B.2.1 Type of lock or latch. *See Chapter 10, Section 1003.3.1.8.*

1133B.2.2 Width and height. *Every required exit doorway shall be of a size as to permit the installation of a door not less than 3 feet (914 mm) in width and not less than 6 feet 8 inches (2032 mm) in height.*

When installed in exit doorways, exit doors shall be capable of opening at least 90 degrees and shall be so mounted that the clear width of the exitway is not less than 32 inches (813 mm). In computing the exit width the net dimension of the exitway shall be used.

1133B.2.3 Hinged doors. *For hinged doors, the opening width shall be measured with the door positioned at an angle of 90 degrees from its closed position.*

---

* In 1133B.1.1.1.1 in Exception 4 the cross-reference to 'Section 101.17.11, Item 4' is incorrect. Cross-reference should read Item 5. This will be submitted for correction in Rulemaking.

1133B.2.3.1 Pairs of doors. *Where a pair of doors is utilized, at least one of the doors shall provide a clear, unobstructed opening width of 32 inches (813 mm) with the leaf positioned at an angle of 90 degrees from its closed position.*

1133B.2.3.2 Automatic doors. *When an automatic door operator is utilized to operate a pair of doors, at least one of the doors shall provide a clear, unobstructed opening width of 32 inches (813 mm) with the door positioned at an angle of 90 degrees from its closed position.*

> ***EXCEPTIONS:***
> ***1.*** *The provisions of Section 1133B.2.3 shall not apply to existing buildings, except when otherwise required under conditions applicable to access for persons with disabilities. In existing buildings, the following shall apply:*
>
> *Where the occupant load is less than 10, except Group I, Division 1 Occupancies, doorways may be 30 inches (762 mm) in clear width.*
>
> *Where occupant load is greater than 10 and it is determined that compliance with Section 1133B.2.3 would create an unreasonable hardship, doorways may be 30 inches (762 mm) in clear width.*
>
> ***2.*** *In existing buildings, the provisions of this section shall not apply when legal or physical constraints will not allow compliance with these building standards or equivalent facilitation without creating an unreasonable hardship. See Section 101.17.11, *Item 4.*

1133B.2.3.3 Revolving doors. *Revolving doors shall not be used as a required entrance for persons with disabilities.*

1133B.2.3.4 Turnstiles, rails and pedestrian controls. *Where turnstiles and crowd control barriers are utilized in a facility for the purpose of providing fully controlled access, such as where an admission price is charged, a door or gate that is accessible to persons with disabilities shall be provided adjacent to each turnstile exit or entrance. This alternate passageway shall be maintained in an unlocked condition during business hours and the door or gate shall not activate a publicly audible alarm system. The door or gate may be latched where all gates are restricted and controlled by an attendant and a sign is posted stating, .all gates are restricted and controlled by an attendant. The accessible door or gate shall provide the same use pattern. Where posts, rails or other pedestrian controls are utilized to create crowd control aisles or lanes, a minimum of one lane shall be accessible and shall provide a minimum aisle width no less than indicated in Figure 11B-5E (a) and (b) with 32 inches (813 mm) of clear opening.*

> ***EXCEPTION:*** *In existing buildings, Section 1133B.2.3 shall not apply when physical constraints or equivalent facilitation will not allow compliance with these building standards without creating an unreasonable hardship. See Section 101.17.11, *Item 4.*

1133B.2.4 Floor level at doors. *Regardless of the occupant load, there shall be a floor or landing on each side of a door.*

1133B.2.4.1 Thresholds. *The floor or landing shall not be more than ½ inch (12.7 mm) lower than the threshold of the doorway. Change in level between ¼ inch (6 mm) and ½ inch (12.7 mm) shall be beveled with a slope no greater than 1 unit vertical to 2 units horizontal (50% slope). Change in level greater than ½ inch (12.7 mm) shall be accomplished by means of a ramp.*

> ***NOTE:*** *[For DSA/AC] See Section 1133B.5.1.*

1133B.2.4.2 Maneuvering clearances at doors. *Minimum maneuvering clearances at doors shall be as shown in Figure 11B-26A and 11B-26B. The floor or ground area within the required clearances shall be level and clear.*

The level area shall have a length in the direction of door swing of at least 60 inches (1524 mm) and the length opposite the direction of door swing of 48 inches (1219 mm) as measured at right angles to the plane of the door in its closed position.

> ***EXCEPTIONS:***
> ***1.*** *The length opposite the direction of door swing shall be a minimum of 44 inches (1118 mm) where the door has no closer and approach to the door by a person in a wheelchair can be made from the latch side, or if the door has neither latch nor closer and approach can be made from the hinge side. See Figure 11B-26A and 11B-26B.*
>
> ***2.*** *In Group R Occupancies, the level area shall have a length both in the direction of door swing and opposite the direction of door swing of 44 inches (1118 mm) as measured at right angles to the plane of the door in its closed position.*

---

* In 1133B.2.3.2 (Automatic doors) in Exception 2 the cross-reference to 'Section 101.17.11, Item 4' is incorrect. Cross-reference should read Item 5. This will be submitted for correction in Rulemaking.

***1133B.2.4.3 The** width of the level area on the side to which the door swings shall extend 24 inches (610 mm) past the strike edge of the door for exterior doors and 18 inches (457 mm) past the strike edge for interior doors.*

***NOTE:** Twenty-four inches (610 mm) is preferred for strike-side clearance.*

***1133B.2.4.4 The** space between two consecutive door openings in a vestibule, serving other than a required exit stairway shall provide a minimum of 48 inches (1219 mm) of clear space from any door opening into such vestibule when the door is positioned at an angle of 90 degrees from its closed position. Doors in a series shall swing either in the same direction or away from the space between the doors.*

***1133B.2.4.5 Where** a door required to be accessible by Section 1133B.1.1.1 is located in a recess or alcove where the distance from the face of the wall to the face of the door is greater than 8 inches, strike side clearances as prescribed in Section 1133B.2.4.3 shall be provided. See Figure 11B-33(a).*

***1133B.2.5 Closer-effort to operate doors.** Maximum effort to operate doors shall not exceed 5 pounds (38 N) for exterior and interior doors, such pull or push effort being applied at right angles to hinged doors and at the center plane of sliding or folding doors. Compensating devices or automatic door operators may be utilized to meet the above standards. When fire doors are required, the maximum effort to operate the door may be increased to the minimum allowable by the appropriate administrative authority, not to exceed 15 pounds (66.72 N).*

***1133B.2.5.1 Door closer.** If the door has a closer, then the sweep period of the closer shall be adjusted so that from an open position of 70 degrees, the door will take at least 3 seconds to move to a point 3 inches (75 mm) from the latch, measured to the landing edge of the door.*

***1133B.2.5.2 Hand**-activated door opening hardware shall be centered between 30 inches (762 mm) and 44 inches (1118 mm) above the floor. Latching and locking doors that are hand-activated and which are in a path of travel shall be operable with a single effort by lever-type hardware, panic bars, push-pull activating bars or other hardware designed to provide passage without requiring the ability to grasp the opening hardware. Locked exit doors shall operate as above in egress direction. Doors to individual hotel or motel units shall operate similarly, except that when a bolt and unlatching operation is key operated from corridor or exterior side of unit door, large bow keys 2 inches (51 mm) (full bow) or 1-¼ inches (32 mm) (half bow) shall be provided in lieu of lever-type hardware on the corridor side. Separate deadlock activation on room side of corridor doors in hotels or motels shall have lever handle or large thumb turn on an easily reached location.*

***1133B.2.5.3 Recessed doors.** Where the plane of the doorway is offset 8 or more inches (205 mm) from any obstruction within 18 inches (455 mm) measured laterally on the latch side, the door shall be provided with maneuvering clearance for front approach. See Figure 11B.33(a).*

***1133B.2.6 Smooth surface.** The bottom 10 inches (254 mm) of all doors except automatic and sliding shall have a smooth, uninterrupted surface to allow the door to be opened by a wheelchair footrest without creating a trap or hazardous condition. Where narrow frame doors are used, a 10-inch (254 mm) high smooth panel shall be installed on the push side of the door, which will allow the door to be opened by a wheelchair footrest without creating a trap or hazardous condition.*

1133B.3 Corridors, Hallways and Exterior Exit Balconies.

***1133B.3.1 Corridor and hallway widths.** Every corridor and hallway serving an occupant load of 10 or more shall not be less than 44 inches (1118 mm) in width. Corridors and hallways serving an occupant load of less than 10 shall not be less than 36 inches (914 mm) in width.*

***1133B.3.2 Corridors and hallways over 200 feet (60 960 mm).** Corridors and hallways that are located on an accessible route and exceed 200 feet (60 960 mm) in length shall have a minimum clear width of 60 inches (1524 mm) clear width, then passing spaces at least 60 inches by 60 inches (1524mmby 1524 mm) shall be located at reasonable intervals not to exceed 200 feet (60 960 mm). A "T" intersection of two corridors or walks is an acceptable passing place.*

EXCEPTIONS:
***1.** In existing buildings, when the enforcing agency determines that compliance with any building standard under this section would create an unreasonable hardship, an exception to such building standard shall be granted when equivalent facilitation is provided.*

***2.** In existing buildings, the provisions of this section shall not apply when legal or physical constraints will not allow compliance*

*with these building standards or equivalent facilitation without creating an unreasonable hardship. See Section 101.17.11, *Item 4.*

1133B.4 Stairways.

1133B.4.1 Handrails.

1133B.4.1.1 Required handrails. *Stairways shall have handrails on each side, and every stairway required to be more than 88 inches (2235 mm) in width shall be provided with not less than one intermediate handrail for each 88 inches (2235 mm) of required width.*

Intermediate handrails shall be spaced approximately equally across with the entire width of the stairway.

EXCEPTIONS:
1. *Stairways serving one individual dwelling unit in Group R, Division 1 or 3 Occupancies may have one handrail, except that stairways open on one or both sides shall have handrails on the open side or sides.*

2. *Private stairways 30 inches (762 mm) or less in height may have handrails on one side only.*

1133B.4.2 Handrail configuration.

1133B.4.2.1 Handrails *shall be 34 to 38 inches (864 to 965 mm) above the nosing of the treads.*

1133B.4.2.2 Handrails *shall extend a minimum of 12 inches (305 mm) beyond the top nosing and 12 inches (305 mm), plus the tread width, beyond the bottom nosing.*

1133B.4.2.3 Ends *shall be returned or shall terminate in newel posts or safety terminals.*

1133B.4.2.4 Where *the extension of the handrail in the direction of the stair run would create a hazard, the termination of the extension shall be made either rounded or returned smoothly to floor, wall or post. Where the stairs are continuous from landing to landing, the inner rail shall be continuous and need not extend out into the landing.*

1133B.4.2.5 Handrails *projecting from a wall shall have a space of 1-½ inches (38 mm) between the wall and the handrail.*

Handrails may be located in a recess if the recess is a maximum of 3 inches (76 mm) deep and extends at least 18 inches (457 mm) above the top of the rail. Handrails shall not rotate in their fittings.

1133B.4.2.6 Handgrips.

1133B.4.2.6.1 The *handgrip portion of handrails shall be not less than 1-¼ inches (32 mm) nor more than 1-½ inches (38 mm) in cross-sectional nominal dimension or the shape shall provide an equivalent gripping surface. The handgrip portion of handrails shall have a smooth surface with no sharp corners. Gripping surfaces (top or sides) shall be uninterrupted by newel posts, other construction elements or obstructions. Any wall or other surface adjacent to the handrail shall be free of sharp or abrasive elements. Edges shall have a minimum radius of 1/8 inch (3.2 mm).*

EXCEPTIONS:
1. *In existing buildings when the enforcing agency determines that compliance with any requirement under Section 1133B.4.2 would create an unreasonable hardship, an exception to the requirement for persons with disabilities may be granted when equivalent facilitation is provided.*

2. *These regulations shall not apply in existing buildings where legal or physical constraints will not allow compliance with these regulations or equivalent facilitation without creating an unreasonable hardship. See Section 101.17.11, **Item 4.*

1133B.4.2.6.2 The *orientation of at least one handrail shall be in the direction of the run of the stair and perpendicular to the direction of the stair nosing, and shall not reduce the minimum required width of the stairs.*

---

* In 1133B.3.2 (Corridors and hallways over 200 feet (60 960 mm)) in Exception 2 the cross-reference to 'Section 101.17.11, Item 4' is incorrect. Cross-reference should read Item 5.
** In 1133B.4.2.6.1 in Exception 2 the cross-reference to 'Section 101.17.11, Item 4' is incorrect. Cross-reference should read Item 5. Footnotes will be submitted for correction in Rulemaking.

1133B.4.3 Tactile stair level identification sign. *Tactile stair level identification signs that comply with *1117B.1-B shall be located at each floor level landing in all enclosed stairways in buildings two or more stories in height to identify the floor level. At exit discharge level, the sign shall include a raised five pointed star located to the left of the identifying floor level. The outside diameter of the star shall be the same as the height of the raised characters.*

1133B.4.4 Striping for the visually impaired. *The upper approach and the lower tread of each stair shall be marked by a strip of clearly contrasting color at least 2 inches (51 mm) wide placed parallel to and [not more than 1 inch (25.4 mm) from] the nose of the step or landing to alert the visually impaired. The strip shall be of material that is at least as slip resistant as the other treads of the stair.*

Where stairways occur outside a building, the upper approach and all treads shall be marked by a strip of clearly contrasting color at least 2 inches (51 mm) wide and placed parallel to and not more than 1 inch (25.4 mm) from the nose of the step or landing to alert the visually impaired. The strip shall be of a material that is at least as slip resistant as the other treads of the stair. A painted strip shall be acceptable.

1133B.4.5 Treads, nosing and risers.

1133B.4.5.1 Treads. *All tread surfaces shall be slip resistant. Weather-exposed stairs and their approaches shall be designed so that water will not accumulate on the walking surfaces. Treads shall have a smooth, rounded or chamfered exposed edges, and no abrupt edges at the nosing (lower front edge).*

1133B.4.5.2 Nosing. *Nosing shall not project more than 1-½ inch (38 mm) past the face of the riser below.*

1133B.4.5.3 Open risers are not permitted. *On any given flight of stairs, all steps shall have uniform riser height and uniform tread widths consistent with Section 1133B.4. Stair treads shall be no less than 11 inches (279 mm) deep, measured from riser to riser See Figure 11B-35. Risers shall be sloped or the underside of the nosing shall have an angle not less than 60 degrees from the horizontal.*

> ***EXCEPTIONS:***
> *1. In existing buildings, when the enforcing agency determines that compliance with any requirement under this section would create an unreasonable hardship, an exception to persons with disabilities requirements may be granted when equivalent facilitation is provided.*
>
> *2. These regulations shall not apply to existing buildings when legal or physical constraints will not allow compliance with these regulations or equivalent facilitation without creating an unreasonable hardship. See Section 101.17.11, **Item 4.*

1133B.5 Ramps.

1133B.5.1 General. *Ramps used as exits shall conform to the provisions of this section. Any path of travel shall be considered a ramp if its slope is greater than 1 foot (305 mm) rise in 20 feet (6096 mm) of horizontal run (5% gradient). The least possible slope shall be used for any ramp.*

1133B.5.2 Width. *The width of ramps shall be as required for stairways and exits.*

1133B.5.2.1 Widths as for exits. *The width of ramps shall be as required for stairways and exits. Pedestrian ramps shall have a minimum width of 48 inches (1219 mm).*

1133B.5.2.2 Entrance and special occupancy. *Pedestrian ramps serving entrances to buildings where the ramp is the only exit discharge path ***or serves an occupant load of 300 or more shall have a minimum clear width of 60 inches (1524 mm). Ramps serving Group R Occupancies may be 36 inches (914 mm) clear width when the occupant load is 50 or less.*
1133B.5.3 Slope. *The maximum slope of a ramp that serves any exit way, provides access for persons with physical disabilities or is in the path of travel shall be 1-foot (305 mm) rise in 12 feet (3658 mm) of horizontal run (8.3% gradient).*

---

* In 1133B.4.3 (Tactile stair level identification sign) the cross-reference to '1117B.1-B is incorrect. Cross-reference should read Section 1117B.5.
** In 1133B.4.5.3 (Open risers are not permitted) in Exception 2 the cross-reference to 'Section 101.17.11, Item 4' is incorrect. Cross-reference should read Item 5.
*** In 1133B.5.2.2 incorrect grammar was adopted during the 2001 code adoption cycle. 1133B.5.2.2 was amended, at that time with the goal, to restate that when there is an occupant load of 300 or more and if the ramp is the only exit path, the ramp should be wider to accommodate the increased occupant load and to function as a combined exit path for all occupants. In the 1st line correct the word 'or' to read 'and' serves. Footnotes will be submitted for correction in Rulemaking.

***1133B.5.3.1 The** cross slope of ramp surfaces shall be no greater than 1 unit vertical in 50 units horizontal (2% slope).*

***1133B.5.4 Landings.** Level ramp landings shall be installed as follows:*

***1133B.5.4.1 Location of landings.** Level ramp landings shall be provided at the top and bottom of each ramp. Intermediate landings shall be provided at intervals not exceeding 30 inches (762 mm) of vertical rise and at each change of direction. Landings are not considered in determining the maximum horizontal distance of each ramp. Landing shall be level as specified in the definition of "level area" in *Section 202.*

***NOTE:** Examples of ramp dimensions are as follows:*

SLOPE	MAXIMUM RISE (Inches)	MAXIMUM HORIZONTAL PROJECTION (feet)
	(x 25.4 for mm)	(x 304.8 for mm)
1:12	30	30
1:16	30	40
1:20	30	50
1:15	30	37.5

***1133B.5.4.2 Size of top landings.** Top landings shall be not less than 60 inches (1524 mm) wide and shall have a length of not less than 60 inches (1524 mm) in the direction of ramp run.*

***1133B.5.4.3 Encroachment of doors.** See Section **1133B.5.4.1.*

***1133B.5.4.4 Strike edge extension.** The width of the landing shall extend 24 inches (610 mm) past the strike edge of any door or gate for exterior ramps and 18 inches (457 mm) past the strike edge for interior ramps.*

***1133B.5.4.5 Landing width.** At bottom and intermediate landings, the width shall be at least the same as required for the ramps.*

***1133B.5.4.6 Change of direction.** Intermediate and bottom landings at a change of direction in excess of 30 degrees shall have a dimension in the direction of ramp run of not less than 72 inches (1829 mm) to accommodate the handrail extension.*

***1133B.5.4.7 Other intermediate landings.** Other intermediate landings shall have a dimension in the direction of ramp run of not less than 60 inches (1524 mm).*

***1133B.5.4.8 For** existing ramps or ramps not covered by Section 1133B.5.4.1, landings shall be provided as set forth in Section 1133B.5.4.1.*

***1133B.5.4.9 Hazards.** Required ramps shall have a curb at least 2 inches (51 mm) high, or a wheel guide rail 2 to 4 inches (51 to 102 mm) high on each side of the ramp landing that has a vertical drop exceeding 4 inches (102 mm) and that is not bounded by a wall or fence.*

1133B.5.5 Handrails for ramps.

***1133B.5.5.1 Handrails** are required on ramps that provide access if slope exceeds 1 foot (305 mm) rise in 20 feet (6096 mm) of horizontal run (5% gradient), except that at exterior door landings, handrails are not required on ramps less than 6 inches (152 mm) rise or 72 inches (1829 mm) in length. Handrails shall be placed on each side of each ramp, shall be continuous*

* In 1133B.5.4.1 (Location of landing) the cross-reference to 'Section 202' is incorrect. Cross-reference should read Section 1102B.
** In 1133B.5.4.3 (Encroachment of doors) the cross-reference to 'Section 1133B.5.4.1' is incorrect, which contains absolutely no information at all regarding the encroachment of doors. Cross-reference should read Section 1003.3.4.4. Footnotes will be submitted for correction in Rulemaking.

the full length of the ramp, shall be 34 to 38 inches (864 to 965 mm) above the ramp surface, shall extend a minimum of 1 foot (305 mm) beyond the top and bottom of the ramp and the ends shall be returned. Handrails projecting from a wall shall have a space of not less than 1-½ inches (38 mm) between the wall and the handrail. Handrails may be located in a recess if the recess is a maximum of 3 inches (76 mm) deep and extends at least 18 inches (457 mm) above the top of the rail.

The grip portion shall not be less than 1-½ inches (32 mm) nor more than 11/2 inches (38 mm), or the shape shall provide an equivalent gripping surface and all surfaces shall be smooth with no sharp corners. Handrails shall not rotate within their fittings. Any wall or other surface adjacent to the handrail shall be free of sharp or abrasive elements. Edges shall have a minimum radius of 1/8 inch (3 mm).

EXCEPTIONS:
1. *Handrails at ramps immediately adjacent to fixed seating in assembly areas are not required.*

2. *Ramps that require handrails and that serve one individual dwelling unit in Group R, Division 1 or 3 Occupancies may have one handrail except that such ramps open on one or both sides shall have handrails provided on the open side or sides.*

3. *Curb ramps do not require handrails.*

1133B.5.5.1.1 Ramp handrails. *Where the extension of the handrail in the direction of the ramp run would create a hazard, the extensions on handrails for ramps shall comply with Section 1133B.4.2.4, or the extension on the handrail may be turned 90 degrees to the run of the ramp.*

1133B.5.6 Wheel guides. *Where the ramp surface is not bounded by a wall or fence and the ramp exceeds 10 feet (3048 mm) in length, the ramp shall comply with one of the following requirements.*

1133B.5.6.1 A *guide curb a minimum of 2 inches (51 mm) in height shall be provided at each side of the ramp; or*

1133B.5.6.2 A *wheel guide rail shall be provided, centered 3 inches (76 mm) plus or minus 1 inch (25 mm) above the surface or the ramp.*

1133B.5.7 Ramps *more than 30 inches (762 mm) above the adjacent ground shall be provided with guardrails as required by this section *and Section 1003.3.4.6. Such guardrails shall be continuous from the top of the ramp to the bottom of the ramp.*

1133B.5.7.1 Guardrails. *Ramps and landings open on one or both sides shall have guardrails as required by this section.*

1133B.5.7.2 Where required. *Unenclosed floor and roof openings, open and glazed sides of stairways, aisles, landings and ramps, balconies or porches that are more than 30 inches (762 mm) above grade or floor below, and roofs used for other than service of the building shall be protected by a guardrail. Guardrails shall be provided at the ends of aisles where they terminate at a fascia of boxes, balconies and galleries.*

EXCEPTION: *Guardrails need not be provided at the following locations:*

1. *On the loading side of loading docks.*

2. *On the auditorium side of a stage, raised platforms and other raised floor areas such as runways, ramps and side stages used for entertainment or presentation. Along the side of an elevated-walking surface when used for the normal functioning of special lighting or for access and use of other special equipment. At vertical openings in the performance area of stages.*

3. *Along vehicle service pits not accessible to the public.*

---

* In 1133B.5.7 cross-reference to 'and Section 1003.3.4.6' is incorrect. Cross-reference should be deleted. This will be submitted for correction in Rulemaking.

1133B.5.7.3 Height. *The top of guardrails shall not be less than 42 inches (1067 mm) in height.*

> ***EXCEPTIONS:***
> ***1.*** *The top of guardrails for Group R, Division 3 and Group U, Division 1 Occupancies and interior guardrails within individual dwelling units, Group R, Division 3 congregate residences and guest rooms of Group R, Division 1 Occupancies may be 36 inches (914 mm) in height.*
>
> ***2.*** *The top guardrails on a balcony immediately in front of the first row of fixed seats and that are not at the end of an aisle may be 26 inches (660 mm) in height.*
>
> ***3.*** *The top of guardrails for stairways, exclusive of their landings, may have a height as specified in Sections 1120A.4.1 and 1133B.4.1.1 for handrails.*

Where an elevation change of 30 inches (762 mm) or less occurs between an aisle parallel to the seats (cross aisle) and the adjacent floor or grade below, guardrails not less than 26 inches (660 mm) above the aisle floor shall be provided.

> ***EXCEPTION:*** *Where the backs of seats on the front of the cross aisle project 24 inches (610 mm) or more above the adjacent floor of the aisle, a *quardrail need not be provided.*

The top of guardrails at the ends of aisles terminating at the fascia of boxes, balconies and galleries shall extend for the width of the aisle and be no closer than 42 inches (1067 mm) to the closest surface of the aisle where there are steps and 36 inches (914 mm) otherwise.

1133B.5.7.4 Openings. *Open guardrails shall have intermediate rails or an ornamental pattern such that a sphere 4 inches (102 mm) in diameter cannot pass through.*

> ***EXCEPTIONS:***
> ***1.*** *The open space between the intermediate rails or ornamental pattern of guardrails in areas of commercial and industrial-type occupancies that are not accessible to the public may be such that a sphere 12 inches (305 mm) in diameter cannot pass through.*
>
> ***2.*** *The triangular openings formed by the riser, tread and bottom element of a guardrail at the open side of a stairway may be of such size that a sphere 6 inches (152 mm) in diameter cannot pass through.*

For guardrail requirements at grandstands, bleachers or other elevated seating facilities, see Section 1133B.5.7.5.

1133B.5.7.5 Perimeter guardrails. *Perimeter guardrails, enclosing walls or fencing shall be provided for all portions of elevated seating facilities that are more than 30 inches (762 mm) above grade or the floor. Construction of guardrails shall comply with the requirements of Section 1133B.5.7 and Table 16-B. Guardrails shall be 42 inches (1067 mm) in height measured vertically above the leading edge of the tread adjacent walking surface or adjacent seat boards.*

> ***EXCEPTION:*** *Guardrails at the front of the front row of seats that are not located at the end of an aisle and where there is no cross aisle may have a height of 26 inches (660 mm) and need not meet the 4 inch maximum (102 mm) spacing specified in Section 1133B.5.7; however, a midrail shall be installed.*

The open vertical space between footboards and seats shall not exceed 9 inches (229 mm) when footboards are more than 30 inches (762 mm) above grade.

1133B.6 Aisles.

1133B.6.1 General. *Every portion of every building in which are installed seats, tables, merchandise, equipment or similar materials shall be provided with aisles leading to an exit.*

1133B.6.2 Width. *Every aisle shall not be less than 36 inches (914 mm) wide if serving only one side, and not less than 44 inches (1118 mm) wide if serving both sides.*

1133B.7 Walks and Sidewalks.

---

* In 1133B.5.7.3 (Height) in the Exception to the 2nd paragraph the word 'quardrail' is misspelled. The word should read guardrail. This will be submitted for correction in Rulemaking.

1133B.7.1 Continuous surface. *Walks and sidewalks subject to these regulations shall have a continuous common surface, not interrupted by steps or by abrupt changes in level exceeding 1/2 inch (12.7 mm) (see Section *1133B.7.3), and shall be a minimum of 48 inches (1219 mm) in width. Surfaces shall be slip-resistant as follows:*

1133B.7.1.1 Slopes less than 6 percent. *Surfaces with a slope of less than 6 percent gradient shall be at least as slip-resistant as that described as a medium salted finish.*

1133B.7.1.2 Slopes 6 percent or greater. *Surfaces with a slope of 6 percent gradient shall be slip-resistant.*

1133B.7.1.3 Surface cross slopes. *Surface cross slopes shall not exceed 1/4 inch (6 mm) per foot except when the enforcing agency finds that due to local conditions it creates an unreasonable hardship, the cross slope shall be increased to a maximum of 1/2 inch (12.7 mm) per foot for distances not to exceed 20 feet (6096 mm) (**2.5% gradient).*

> ***EXCEPTION:*** *When, because of right-of-way restrictions, natural barriers or other existing conditions, the enforcing agency determines that compliance with the 48-inch (1219 mm) clear sidewalk width would create an unreasonable hardship, the clear width may be reduced to 36 inches (914 mm).*

1133B.7.2 Gratings. *Walks, sidewalks and pedestrian ways shall be free of gratings whenever possible. For gratings located in the surface of any of these areas, grid openings in gratings shall be limited to 1/2 inch (12.7 mm) in the direction of traffic flow.*

> ***EXCEPTIONS:***
> ***1.*** *Where the enforcing agency determines that compliance with this section would create an unreasonable hardship, an exception may be granted when equivalent facilitation is provided.*
>
> ***2.*** *This section shall not apply in those conditions where, due to legal or physical constraints, the site of the project will not allow compliance with these building standards or equivalent facilitation without creating an unreasonable hardship. See Section 101.17.11, ***Item 4.*

1133B.7.3 Five percent gradient. *When the slope in the direction of travel of any walk exceeds 1 unit vertical to 20 units horizontal (5% gradient), it shall comply with the provisions of Section 1133B.5.*

1133B.7.4 Changes in level. *Abrupt changes in level along any accessible route shall not exceed 1/2 inch (12.7 mm). When changes in level do occur, they shall be beveled with a slope no greater than 1 unit vertical to 2 units horizontal (50%), except that level changes not exceeding 1/4 inch (6 mm) may be vertical.*

When changes in levels greater than 1/2 inch (12.7 mm) are necessary, they shall comply with the requirements for curb ramps.

> ***NOTE:*** *See Section 1127B.5.*

1133B.7.5 Level areas. *Walks shall be provided with a level area not less than 60 inches by 60 inches (1524 mm by 1524 mm) at a door or gate that swings toward the walk, and not less than 48 inches wide by 44 inches (1219 mm by 1118 mm) deep at a door or gate that swings away from the walk. Such walks shall extend 24 inches (610 mm) to the side of the strike edge of a door or gate that swings toward the walk. (For example, see Figure 11B-26B.)*

1133B.7.6 Walks with continuous gradients. *All walks with continuous gradients shall have level areas at least 5 feet (1524 mm) in length at intervals of at least every 400 feet (121 920 mm).*

---

* Sin 1133B.7.1 (Continuous surface) the cross-reference to 'Section 1133B.7.3' is incorrect. Cross-reference should read Section 1133B.7.4.
** In 1133B.7.1.3 (Surface cross slopes) the cross-reference to '2.5% gradient' is incorrect. Cross-reference should read 4.08% gradient.
*** In 1133B.7.2 (Gratings) in Exception 2 the cross-reference to 'Section 101.17.11, Item 4' is incorrect. Cross-reference should read Item 5.
Footnotes will be submitted for correction in Rulemaking.

1133B.8 Hazards.

1133B.8.1 Warning curbs. *Abrupt changes in level, except between a walk or sidewalk and an adjacent street or driveway, exceeding 4 inches (102 mm) in a vertical dimension, such as at planters or fountains located in or adjacent to walks, sidewalks or other pedestrian ways, shall be identified by curbs projecting at least 6 inches (152 mm) in height above the walk or sidewalk surface to warn the blind of a potential drop off.*

When a guardrail or handrail is provided, no curb is required when a guide rail is provided centered 3 inches (76 mm) plus or minus 1 inch (25 mm) above the surface of the walk or sidewalk, the walk is 5 percent or less gradient or no adjacent hazard exists.

1133B.8.2 Overhanging obstructions. *Any obstruction that overhangs a pedestrian's way shall be a minimum of 80 inches (2032 mm) above the walking surface as measured from the bottom of the obstruction. Where a guy support is used parallel to a path of travel, including, but not limited to, sidewalks, a guy brace, sidewalk guy or similar device shall be used to prevent an overhanging obstruction as defined (see Figure 11B-28).*
Hazards such as drop-offs adjacent to walk ways or overhanging obstructions can be dangerous to persons with sight problems. This section addresses these situations.

1133B.8.3 Detectable warnings at transit boarding platforms. *Transit boarding platforms shall have a detectable warning texture extending the full length of the loading area. This detectable warning texture shall have the following features:*

Width 24 to 36 inches (610 mm to 914 mm) placed at the edge of the drop-off or safe area.

Durable, slip-resistant material having a surface texture composed of raised, truncated domes in a staggered pattern with a diameter of nominal 0.9 inch (22.9 mm) at the base tapering to 0.45 inch (11.4 mm) at the top, a height of nominal 0.2 inch (5.08 mm), and a center-to-center spacing of nominal 2.35 inches (59.7 mm) in compliance with Figure 11B-23A. "Nominal" as used here shall be in accordance with California State Referenced Standards Code Sections 12-11A and B-102. The detectable warning shall contrast visually with adjoining surfaces, either light on dark or dark on light. The material used to provide contrast shall be an integral part of the walking surface. Warning surfaces shall differ from adjoining walking surfaces in resiliency or sound on cane contact. This surface shall be reserved for warning.

Color yellow conforming to Federal Color No. 33538, as shown in Table IV of Standard No. 595B. Where the color value contrast between the yellow warning and the main walking surface is less than 70 percent, a 1 inch-wide (25 mm) black strip shall separate the yellow warning from the main walking surface. Contrast shall be determined by:

> *Contrast = [(B1-B2/B1)] × 100 percent where B1 = light reflectance value (LRV) of the lighter area and B2 = light reflectance value (LRV) of the darker area.*

Only approved DSA/AC detectable warning products and directional surfaces shall be installed as provided in the California Code of Regulations (CCR), Title 24, Part 1, Articles 2, 3 and 4. Refer to CCR Title 24, Part 12, Chapter 12-11A and B, for building and facility access specifications for product approval for detectable warning products and directional surfaces.

> ***NOTE:*** *Detectable warning products and directional surfaces installed after January 1, 2001, shall be evaluated by an independent entity, selected by the Department of General Services, Division of the State Architect-Access Compliance, for all occupancies, including transportation and other outdoor environments, except that when products and surfaces are for use in residential housing evaluation shall be in consultation with the Department of Housing and Community Development. See Government Code Section 4460.*

1133B.8.4 Detectable directional texture at boarding platforms. *At transit boarding platforms, the pedestrian access shall be identified with a detectable directional texture. This detectable directional texture shall comply with Figure 11B-23B and shall be 0.1 inch (2.54 mm) in height that tapers off to 0.04 inch (1.02 mm), with bars raised 0.2 inch (5.08 mm) from the surface. The raised bars shall be 1.3 inches (33.02 mm) wide and 3 inches (76 mm) from center-to-center of each bar. This surface shall differ from adjoining walking surfaces in resiliency or sound on cane contact. The color of the directional texture shall comply with Section 1133B.8.3. This surface will be placed directly behind the yellow detectable warning texture specified in Section 1133B.8.3, aligning with all doors of the transit vehicles, where passengers will embark. The width of the directional texture shall be equal to the width of the transit vehicle's door opening. The depth of the texture shall not be less than 36 inches (914 mm).*

Only approved DSA/AC detectable warning products and directional surfaces shall be installed as provided in the California Code of Regulations (CCR), Title 24, Part 1, Articles 2, 3 and 4. Refer to CCR Title 24, Part 12, Chapter 12-11A and B, for building and facility access specifications for product approval for detectable warning products and directional surfaces.

> ***NOTE:*** *Detectable warning products and directional surfaces installed after January 1, 2001, shall be evaluated by an independent entity, selected by the Department of General Services, Division of the State Architect-Access Compliance, for all occupancies, including transportation and other outdoor environments, except that when products and surfaces are for use in residential housing evaluation shall be in consultation with the Department of Housing and Community Development. See Government Code Section 4460.*

1133B.8.5 Detectable warnings at hazardous vehicular areas. *If a walk crosses or adjoins a vehicular way, and the walking surfaces are not separated by curbs, railings or other elements between the pedestrian areas and vehicular areas, the boundary between the areas shall be defined by a continuous detectable warning which is 36 inches (914 mm) wide, complying with Sections 1133B.8.3 through 1133B.8.5.*

Only approved DSA/AC detectable warning products and directional surfaces shall be installed as provided in the California Code of Regulations (CCR), Title 24, Part 1, Articles 2, 3 and 4. Refer to CCR Title 24, Part 12, Chapter 12-11A and B, for building and facility access specifications for product approval for detectable warning products and directional surfaces.

> ***NOTE:*** *Detectable warning products and directional surfaces installed after January 1, 2001, shall be evaluated by an independent entity, selected by the Department of General Services, Division of the State Architect-Access Compliance, for all occupancies, including transportation and other outdoor environments, except that when products and surfaces are for use in residential housing evaluation shall be in consultation with the Department of Housing and Community Development. See Government Code Section 4460.*

1133B.8.6 Protruding objects.

1133B.8.6.1 General. *Objects projecting from walls (for example, telephones) with their leading edges between 27 inches (686 mm) and 80 inches (2032 mm) above the finished floor shall protrude no more than 4 inches (102 mm) into walks, halls, corridors, passageways or aisles. Objects mounted with their leading edges at or below 27 inches (686 mm) above the finished floor may protrude any amount. Free-standing objects mounted on posts or pylons may overhang 12 inches (305 mm) maximum from 27 inches (686 mm) to 80 inches (2032 mm) above the ground or finished floor. Protruding objects shall not reduce the clear width of an accessible route or maneuvering space. See Figure 11B-7A.*

1133B.8.6.2 Head room. *Walks, halls, corridors, passageways, aisles or other circulation spaces shall have 80 inches (2032 mm) minimum clear head room. See Figure 11B-7A.*

1133B.8.6.3 Free-standing signs. *Wherever signs mounted on posts or pylons protrude from the posts or pylons and the bottom edge of the sign is at less than 80 inches (2032 mm) above the finished floor or ground level, the edges of such signs shall be rounded or eased and the corners shall have a minimum radius of 0.125 inches.*

Division IV – ACCESSIBILITY FOR EXISTING BUILDINGS

Note: *This division replaces Appendix Chapter 11, Division II, for use in California.*

SECTION 1134B – ACCESSIBILITY FOR EXISTING BUILDINGS

1134B.1 Scope. *The provisions of this division apply to renovation, structural repair, alteration and additions to existing buildings, including those identified as historic buildings. This division identifies minimum standards for removing architectural barriers, and providing and maintaining accessibility to existing buildings and their related facilities.*

1134B.2 General. *All existing buildings and facilities, when alterations, structural repairs or additions are made to such buildings or facilities, shall comply with all provisions of Division I, New Buildings, except as modified by this division. These requirements shall apply only to the area of specific alteration, structural repair or addition and shall include those areas listed below:*

1134B.2.1 A *primary entrance to the building or facility and the primary path of travel to the specific area of alteration, structural repair or addition, and sanitary facilities, drinking fountains, signs and public telephones serving the area.*

EXCEPTIONS:

1. *When the total construction cost of alterations, structural repairs or additions does not exceed a valuation threshold of $50,000, based on January 1981, "ENR US20 Cities" Average construction cost index of 3372.02 (Engineering News Record, McGraw Hill Publishing Company), and the enforcing agency finds that compliance with this code creates an unreasonable hardship, compliance shall be limited to the actual work of the project. The enforcing agency shall annually update the valuation threshold to a current amount based on the increase in the index since the last figure used. (For example, the January 2000 amount is $90.895.07.) For purposes of this exception, an unreasonable hardship exists where the cost of providing an accessible entrance, path of travel, sanitary facilities, public phones and drinking fountains, is disproportionate to the cost of the project; that is, where it exceeds 20 percent of the cost of the project without these features. Where the cost of alterations necessary to make these features fully accessible is disproportionate, access shall be provided to the extent that it can be without incurring disproportionate cost. In choosing which accessible elements to provide, priority should be given to those elements that will provide the greatest access in the following order:*

1.1 *An accessible entrance,*

1.2 *An accessible route to the altered area,*

1.3 *At least one accessible restroom for each sex,*

1.4 *Accessible telephones,*

1.5 *Accessible drinking fountains, and*

1.6 *When possible, additional accessible elements such as parking, storage and alarms.*

The obligation to provide access may not be evaded by performing a series of small alterations to the area served by a single path of travel if those alterations could have been performed as a single undertaking. If an area has been altered without providing an accessible path of travel to that area, and subsequent alterations of that area or a different area on the same path of travel are undertaken within three years of the original alteration, the total cost of alterations to the areas on that path of travel during the preceding three-year period shall be considered in determining whether the cost of making that path of travel accessible is disproportionate. Only alterations undertaken after January 26, 1992, shall be considered in determining if the cost of providing an accessible path of travel is disproportionate to the overall cost of the alterations.

2. *Certain types of privately funded, multistory buildings and facilities were formerly exempt from accessibility requirements above and below the first floor under this code, but as of the effective date of this regulation are no longer exempt due to more restrictive provisions in the federal Americans with Disabilities Act. In alteration projects involving buildings and facilities previously approved and built without elevators, areas above and below the ground floor are subject to the 20 percent disproportionality provisions described in Exception 1, above, even if the value of the project exceeds the valuation threshold in Exception 1. The types of buildings and facilities are:*

2.1 *Office buildings and passenger vehicle service stations of three stories or more and 3,000 or more square feet (279m2) per floor.*

2.2 *Offices of physicians and surgeons.*

2.3 *Shopping centers.*

2.4 *Other buildings and facilities three stories or more and more than 3,000 square feet (279 m2) per floor if a reasonable portion of services sought and used by the public is available on the accessible level.*

NOTE: *For the general privately funded multistory building exception applicable to new construction and alterations, see Section 1103B.1, *Exception 2.1.*

3. *Alterations, structural repairs or additions consisting of one or more of the following shall be limited to the actual work of the project:*

3.1 *Altering one building entrance to meet accessibility requirements.*

3.2 *Altering one existing toilet facility to meet accessibility requirements.*

3.3 *Altering existing elevators to meet accessibility requirements.*

3.4 *Altering existing steps to meet accessibility requirements.*

3.5 *Altering existing handrails to meet accessibility requirements.*

3.6 *Alteration solely for the purpose of removing barriers undertaken pursuant to the requirements of Sections 36.402 and 36.404 through 36.406 of Title III of the Department of Justice regulations promulgated pursuant to the Americans with Disabilities Act (Public Law 101-336, 28 C.F.R. Section 36.402, 28 C.F.R. Section 36.404, 28 C.F.R. Section 36.405, and 28 C.F.R. 36.406) or the accessibility requirements of this code as those requirements or regulations now exist or are hereafter amended, including the following:*

3.6.1 Installing *ramps*

3.6.2 Making *curb cuts in sidewalks and entrance*

3.6.3 *Repositioning shelves*

3.6.4 Rearranging *tables, chairs, vending machines, display racks, and other Furniture*

3.6.5 *Repositioning telephones*

3.6.6 Adding *raised markings on elevator control buttons*

3.6.7 Installing *flashing alarm lights*

3.6.8 Widening *doors*

3.6.9 Installing *offset hinges to widen doorways*

3.6.10 Eliminating *a turnstile or providing an alternative accessible path*

3.6.11 Installing *accessible door hardware*

3.6.12 Installing *grab bars in toilet stalls*

3.6.13 *Rearranging toilet partitions to increase maneuvering space*

3.6.14 *Insulating lavatory pipes under sinks to prevent burns*

3.6.15 *Installing a raised toilet seat*

3.6.16 *Installing a full-length bathroom mirror*

3.6.17 *Repositioning the paper towel dispenser in a bathroom*

3.6.18 *Creating designated accessible parking spaces*

3.6.19 *Installing an accessible paper cup dispenser at an existing inaccessible water fountain*

3.6.20 *Removing high-pile, low-density carpeting*

3.6.21 *Installing vehicle hand controls.*

---

* In 1134B.2.1 in the Note to Exception 2.4 the cross-reference to 'Section 1103B.1, Exception 21.' Is incorrect. Cross-reference should read Exception 3. This will be submitted for correction in Rulemaking.

3.7 Altering existing parking lots by resurfacing and/or restriping.

4. Projects which consist only of heating, ventilation, air conditioning, reroofing, electrical work not involving placement of switches and receptacles, cosmetic work that does not affect items regulated by this code, such as painting, equipment not considered to be a part of the architecture of the building or area, such as computer terminals, office equipment, etc., are not considered alteration projects for the purposes of accessibility for persons with disabilities and shall not be subject to this code. For the purposes of this section, the term "construction cost" does not include building permit fees or discretionary permit fees.

***NOTE:** The only purpose of this exception is to exclude projects from activating the provisions of this section. The exceptions are not intended to relieve projects from complying with other applicable provisions of this code (e.g., replacement of carpet does not activate the provisions of this section; however, it still must comply with Section 1124B.3).*

***1134B.2.2 Where** it is technically infeasible in the area of an alteration to make existing restroom facilities code compliant and to install separate sanitary facilities for each sex, then the installation of at least one unisex toilet/bathroom per floor being altered, located in the same area as existing toilet facilities, will be permitted. Such a facility shall meet the requirements of Section 1115B.7.2.*

1134B.3 General Accessibility for Entrances, Exits and Paths of Travel.

***1134B.3.1 Automatic doors.** When an automatic door operator is utilized to operate a pair of doors, at least one of the doors shall provide a clear, unobstructed opening width of 32 inches (813 mm) with the door positioned at an angle of 90 degrees from its closed position.*

EXCEPTIONS:

***1.** In existing buildings the following shall apply:*

***1.1** Where the occupant load is less than 10, except Group I, Division 1 Occupancies, doorways may be 30 inches (762 mm) in clear width.*

***1.2** Where occupant load is greater than 10 and it is determined that compliance with Section 1120A.2.3 would create an unreasonable hardship, doorways may be 30 inches (762 mm) in clear width.*

***2.** In existing buildings, the provisions of this section shall not apply when legal or physical constraints will not allow compliance with these building standards or equivalent facilitation without creating an unreasonable hardship. See Section 101.17.11,* Item 4.*

SECTION 1135B – HISTORIC PRESERVATION – SPECIAL STANDARDS OF ACCESSIBILITY FOR BUILDINGS WITH HISTORICAL SIGNIFICANCE

***1135B.1 General.** Qualified historical buildings shall comply with the State Historical Building Code, Part 8, Title 24, of the California Code of Regulations as printed in Part 2, Chapter 34, Division II.*

---

* In 1134B.3.1 (Automatic doors) in Exception 2 the cross-reference to 'Section 101.17.11, Item 4 ' is incorrect. Cross-reference should read Item 5. This will be submitted for correction in Rulemaking.

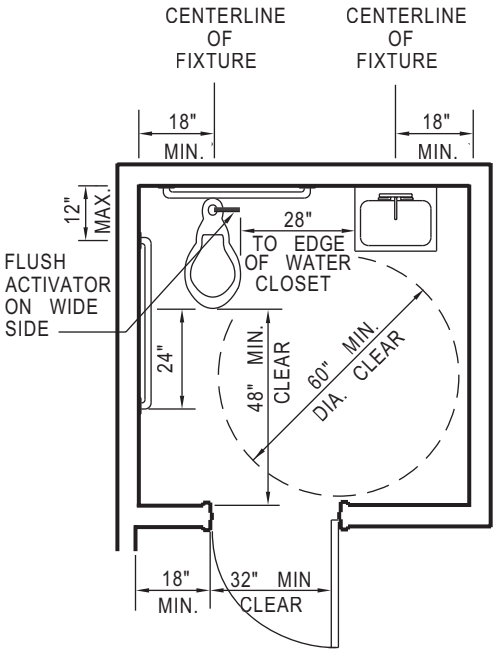

SINGLE OCCUPANCY TOILET

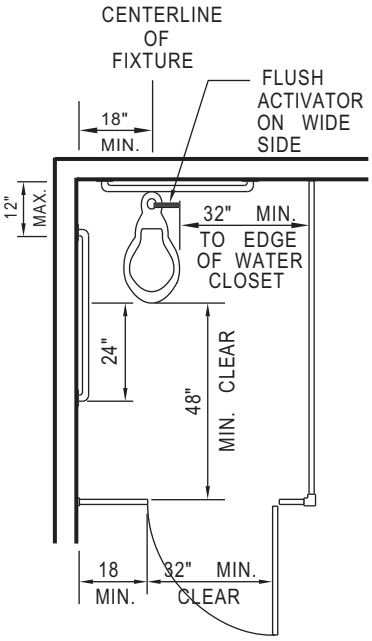

MULTIPLE TOILET STALL

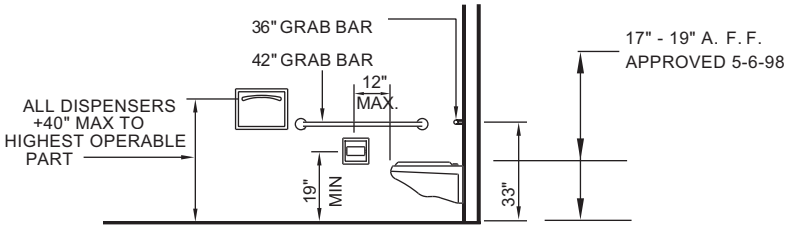

SIDE ELEVATION

THESE DIAGRAMS ILLUSTRATE THE SPECIFIC REQUIREMENTS OF THESE REGULATIONS AND ARE INTENDED ONLY AS AN AID FOR BUILDING DESIGN AND CONSTRUCTION

FIGURE 11B-1A

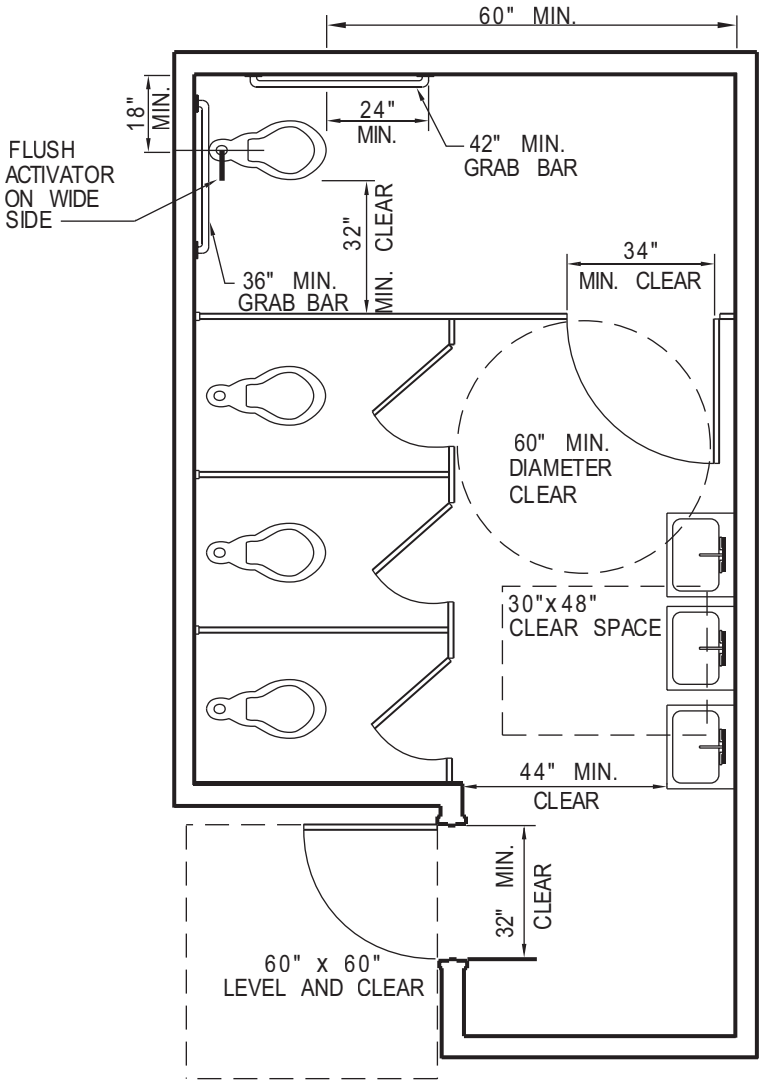

THIS DIAGRAM ILLUSTRATES THE SPECIFIC REQUIREMENTS OF THESE REGULATIONS AND IS INTENDED ONLY AS AN AID FOR BUILDING DESIGN AND CONSTRUCTION.

FIGURE 11B-1B—MULTIPLE ACCOMMODATION TOILET

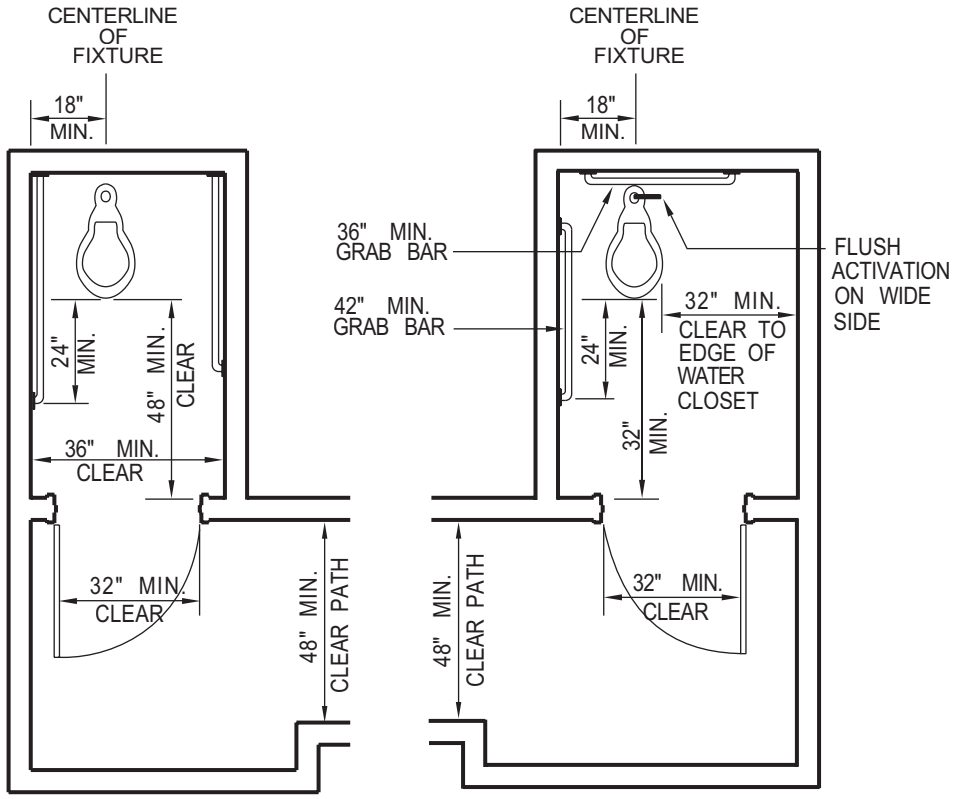

FRONT TRANSFER STYLE TOILET ROOM PLAN

SIDE TRANSFER STYLE TOILET ROOM PLAN

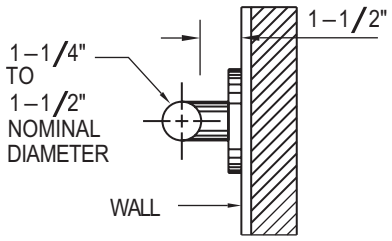

SECTION THROUGH TYPICAL GRAB BAR

THESE DIAGRAMS ILLUSTRATE THE SPECIFIC REQUIREMENTS OF THESE REGULATIONS AND ARE INTENDED ONLY AS AN AID FOR BUILDING DESIGN AND CONSTRUCTION

FIGURE 11B-1C—EQUIVALENT FACILITATION FOR EXISTING BUILDINGS ONLY

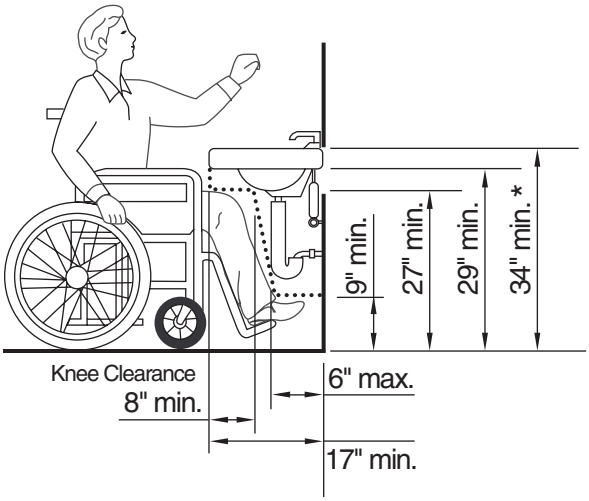

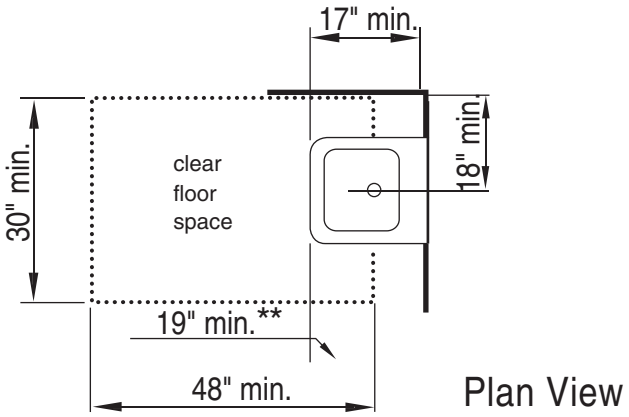

THIS DIAGRAM ILLUSTRATES THE SPECIFIC REQUIREMENTS OF THESE REGULATIONS AND IS INTENDED ONLY AS AN AID FOR BUILDING DESIGN AND CONSTRUCTION.

FIGURE 11B-1D—KNEE CLEARANCE

* To be consistent with Section 1115B.2.1.2.1 paragraph 2, the 34"-min. should read 34"-max. This will be corrected in Rulemaking.

** To be consistent with 1115B.2.1, the 19"-min. should read 19"-max. This will be corrected in Rulemaking.

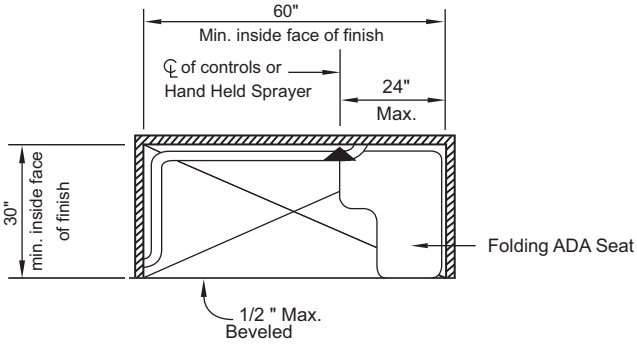

ROLL-IN SHOWER—A

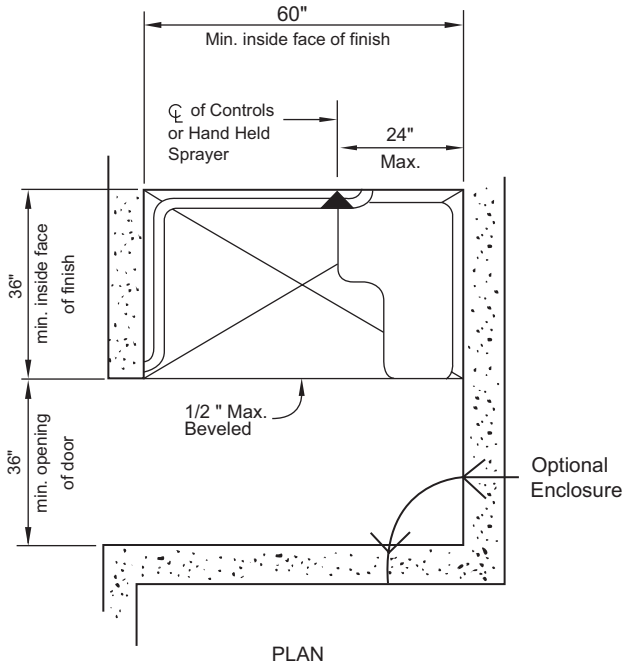

PLAN

ROLL-IN SHOWER—C
36" x 60" WITH ENCLOSURE

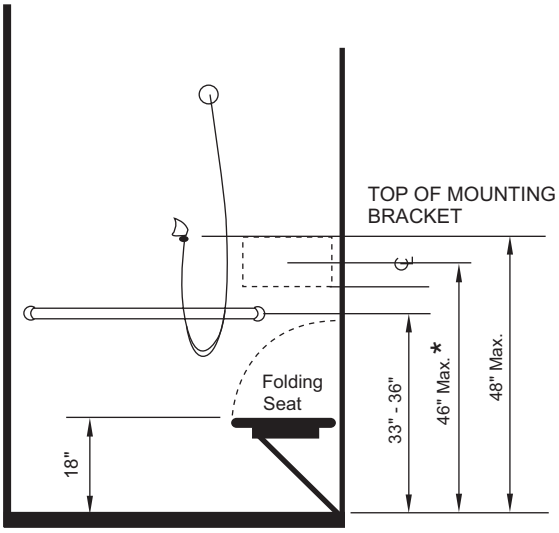

ELEVATION AT SHOWER
TYPICAL FOR A–C

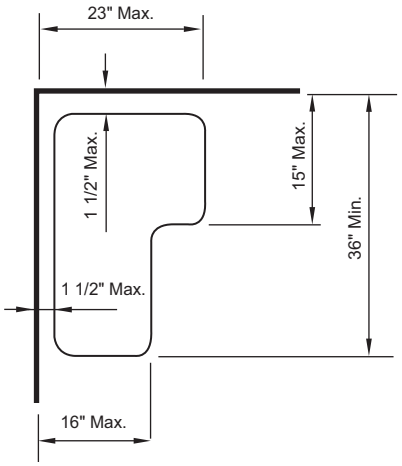

SHOWER SEAT

FIGURE 11B-2A—ROLL-IN SHOWER

* This was erroneously published as 46" max. It should read 40" max. The California Building Standards Commission will correct this in rulemaking.

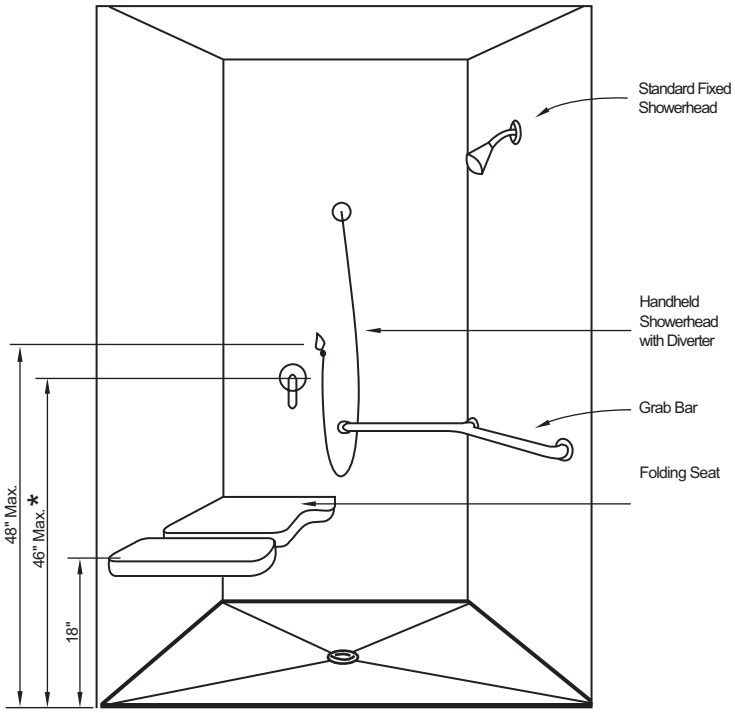

PERSPECTIVE OF ROLL-IN SHOWER—B
42" x 48" CALIFORNIA SIZE

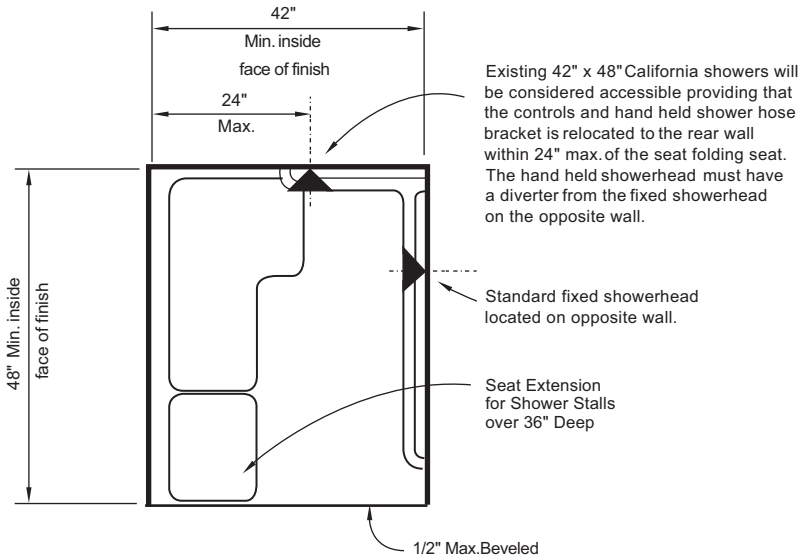

ROLL-IN SHOWER—B
42" x 48" CALIFORNIA SIZE

FIGURE 11B-2B—ROLL-IN SHOWER

* This was erroneously published as 46" max. It should read 40" max. The California Building Standards Commission will correct this in rulemaking.

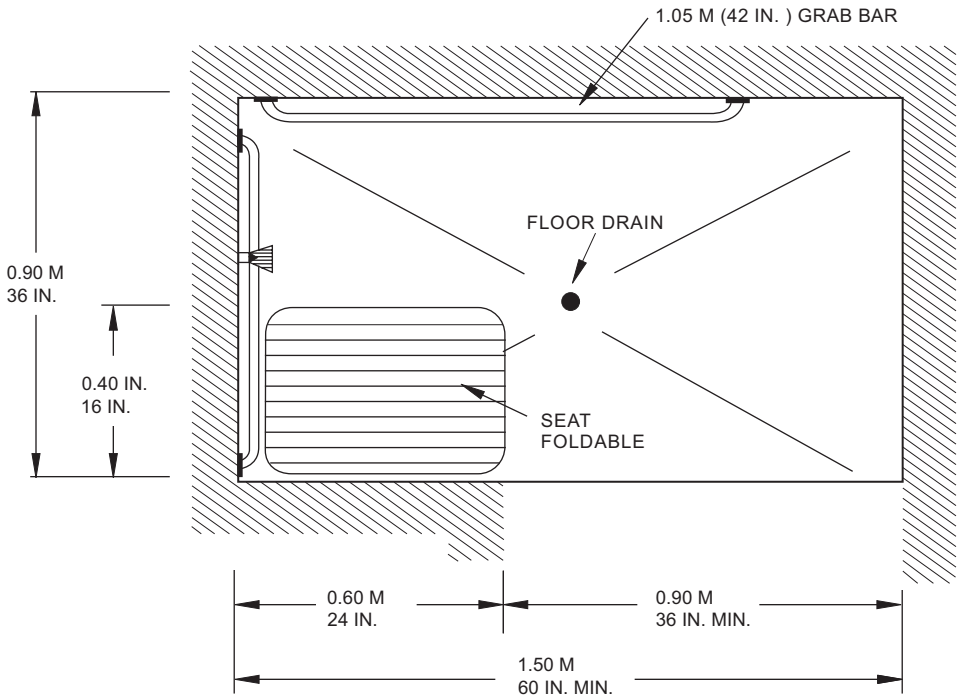

THIS DIAGRAM ILLUSTRATES THE SPECIFIC REQUIREMENTS OF THESE REGULATIONS AND IS INTENDED ONLY AS AND AID FOR BUILDING DESIGN AND CONSTRUCTION.

FIGURE 11B-2D—ALTERNATIVE ROLL-IN

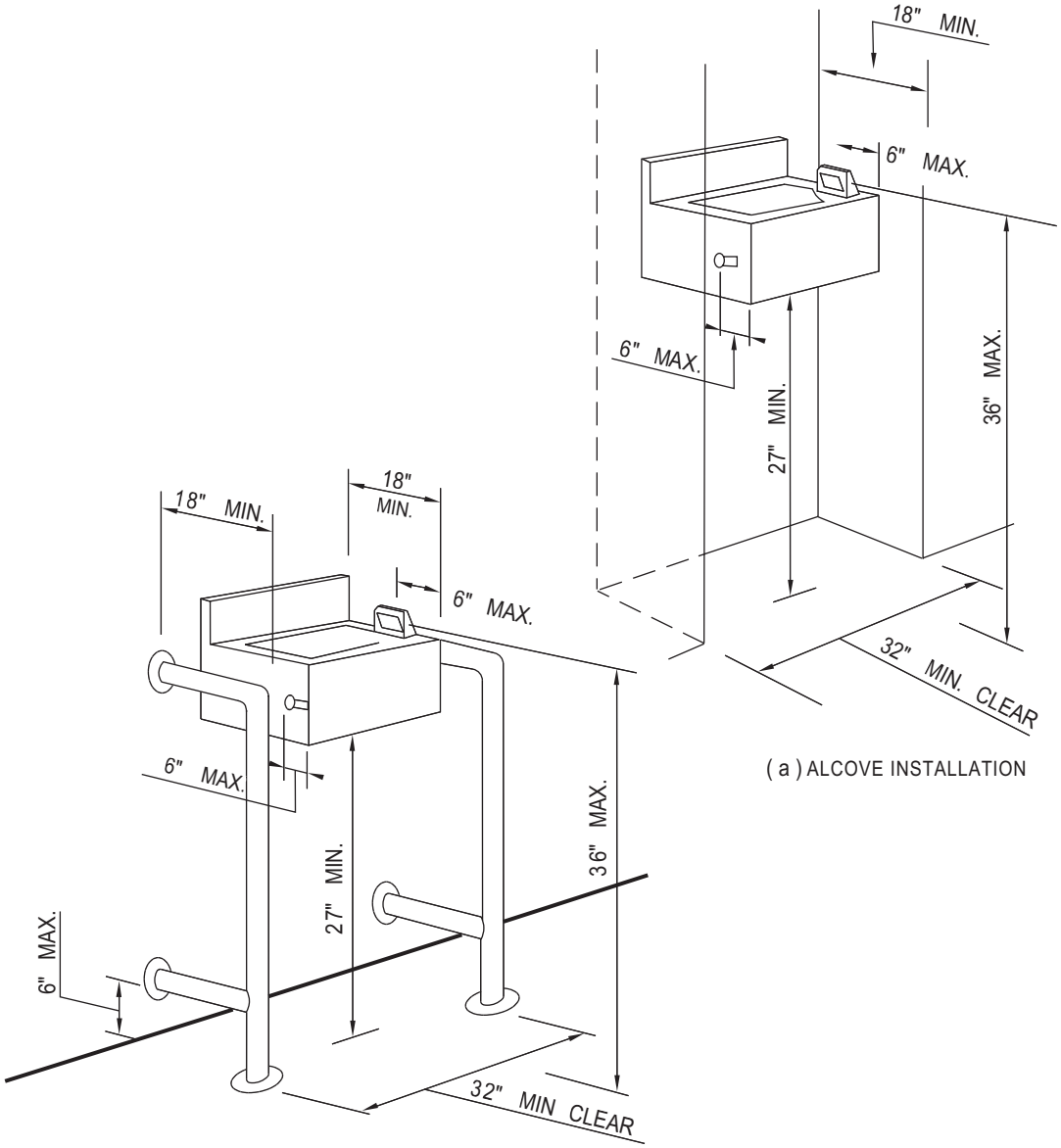

(a) ALCOVE INSTALLATION

(b) NONALCOVE WING WALL INSTALLATION

THESE DIAGRAMS ILLUSTRATE THE SPECIFIC REQUIREMENTS OF THESE REGULATIONS AND ARE INTENDED ONLY AS AN AID FOR BUILDING DESIGN AND CONSTRUCTION

FIGURE 11B-3—WATER FOUNTAINS

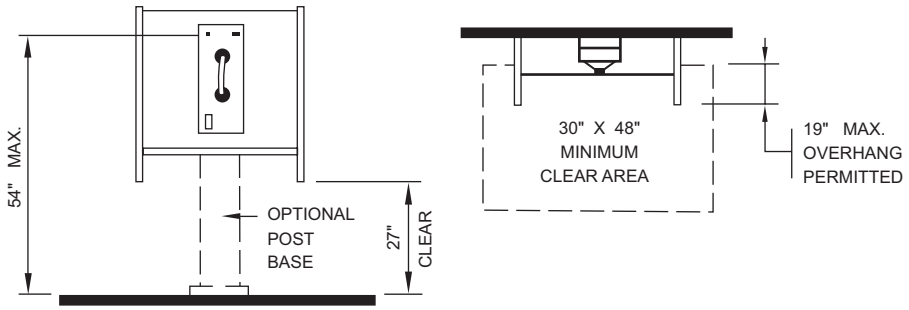

ELEVATION PLAN

(a) SIDE REACH ARRANGEMENT

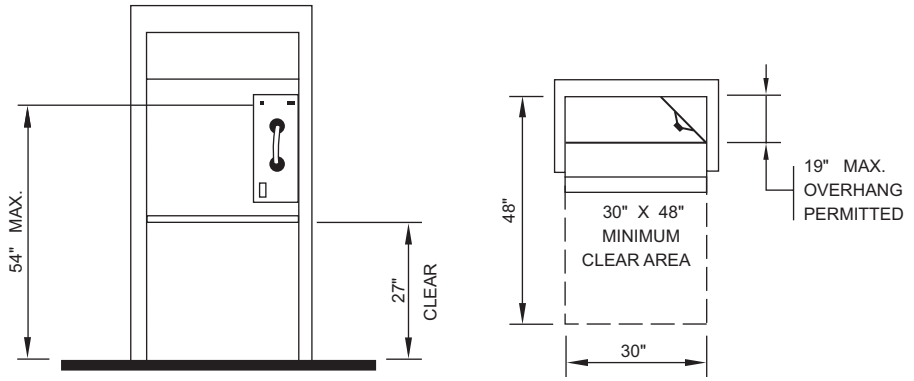

ELEVATION PLAN

(b) FULL HEIGHT ENCLOSURE

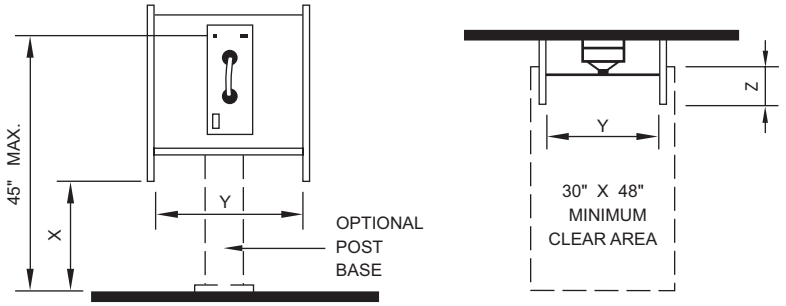

NOTE: IF Y IS LESS THAN 30 INCHES, THEN X SHALL BE GREATER THAN 27 INCHES.

NOTE: IF Z IS GREATER THAN 12 INCHES, THEN Y SHALL BE GREATER THAN 30 INCHES.

NOTE: IF Z IS GREATER THAN 12 THAN 30 INCHES.

ELEVATION PLAN

(c) FORWARD REACH ARRANGEMENT

THESE DIAGRAMS ILLUSTRATE THE SPECIFIC REQUIREMENTS OF THESE REGULATIONS AND ARE INTENDED ONLY AS AN AID FOR BUILDING DESIGN AND CONSTRUCTION

FIGURE 11B-4—MOUNTING HEIGHTS AND CLEARANCES FOR TELEPHONES

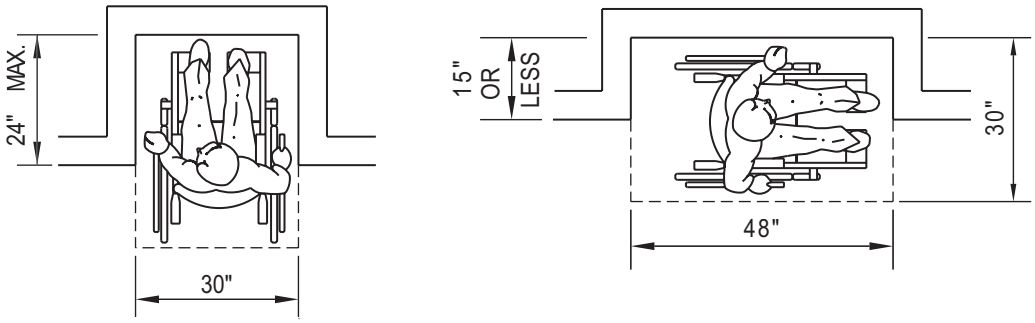

(a) CLEAR FLOOR SPACE IN ALCOVES

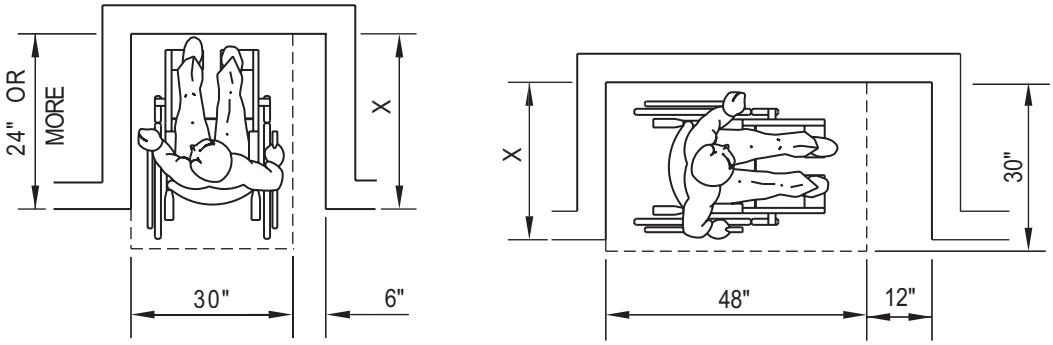

NOTE : IF X > 24 INCHES, THEN AN ADDITIONAL MANEUVERING CLEARANCE OF 6 INCHES SHALL BE PROVIDED AS SHOWN.

NOTE : IF X > 15 INCHES, THEN AN ADDITIONAL MANEUVERING CLEARANCE OF 12 INCHES SHALL BE PROVIDED AS SHOWN.

(b) ADDITIONAL MANEUVERING CLEARANCE FOR ALCOVES

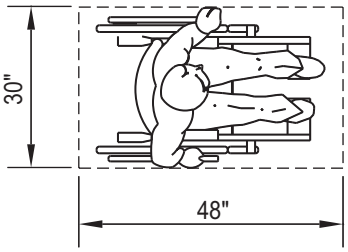

(c) CLEAR FLOOR SPACE

THESE DIAGRAMS ILLUSTRATE THE SPECIFIC REQUIREMENTS OF THESE REGULATIONS AND ARE INTENDED ONLY AS AN AID FOR BUILDING DESIGN AND CONSTRUCTION

FIGURE 11B-5A—MINIMUM CLEAR FLOOR SPACE FOR WHEELCHAIRS

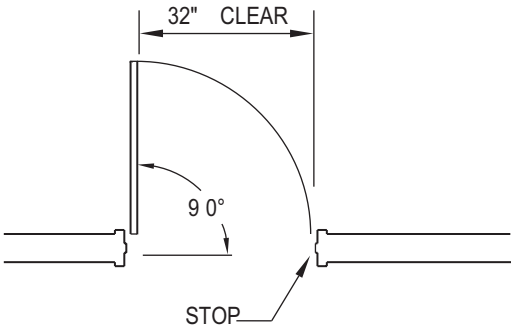

CLEAR OPENINGS MUST BE BETWEEN THE DOOR IN ITS 90 OPENING POSITION AND THE FACE OF THE STOP

(a) SINGLE DOOR

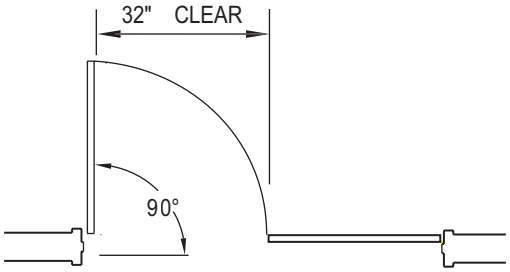

CLEAR OPENINGS FOR TWO LEAF DOORS MUST BE BETWEEN EITHER DOOR IN ITS 90° OPEN POSITION AND THE EDGE OF THE OTHER DOOR.

(b) DOUBLE DOOR

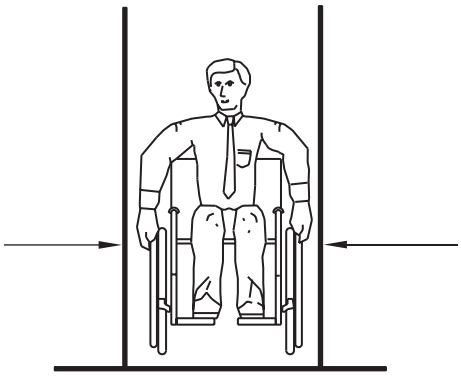

AN ADULT SIZE WHEELCHAIR AVERAGES 27 INCHES IN WIDTH. THE REQUIRED 32 INCH CLEAR OPENING ALLOWS 2–1/2 INCHES ON EACH SIDE FOR HANDS.

(c) PASSAGE CLEARANCE

THESE DIAGRAMS ILLUSTRATE THE SPECIFIC REQUIREMENTS OF THESE REGULATIONS AND ARE INTENDED ONLY AS AN AID FOR BUILDING DESIGN AND CONSTRUCTION

FIGURE 11B-5B—DOOR WIDTH

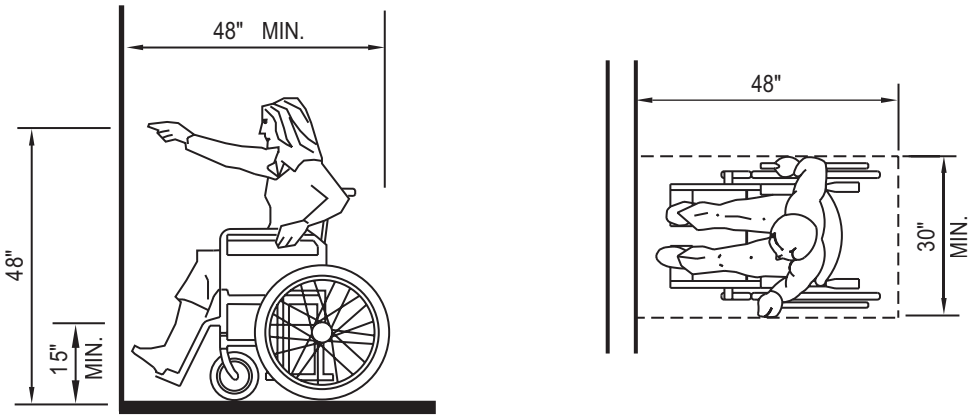

(a) HIGH FORWARD REACH LIMIT

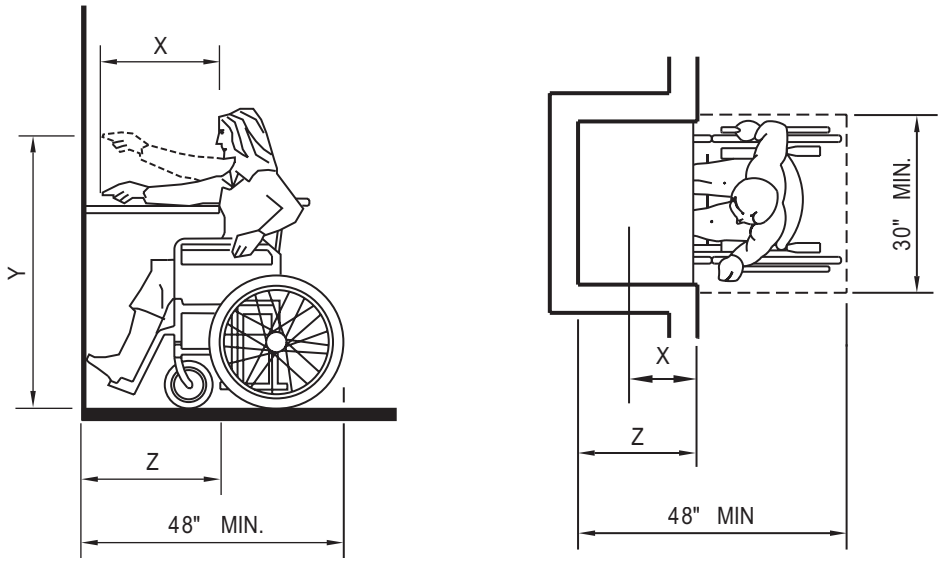

NOTE :
X SHALL BE LESS THAN OR EQUAL TO 25 INCHES Z SHALL BE GREATER THAN OR EQUAL TO X. WHEN X IS LESS THAN 20 INCHES, THEN Y SHALL BE 48 INCHES MAXIMUM. WHEN X IS 20 TO 25 INCHES, THEN Y SHALL BE 44 INCHES MAXIMUM.

(b) MAXIMUM FORWARD REACH OVER AN OBSTRUCTION

THESE DIAGRAMS ILLUSTRATE THE SPECIFIC REQUIREMENTS OF THESE REGULATIONS AND ARE INTENDED ONLY AS AN AID FOR BUILDING DESIGN AND CONSTRUCTION

FIGURE 11B-5C—FORWARD REACH

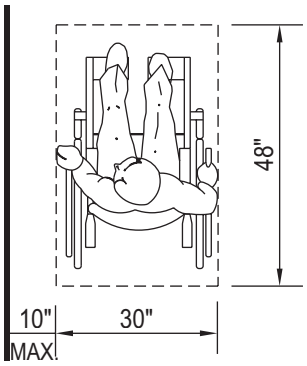

(a) CLEAR FLOOR SPACE PARALLEL APPROACH

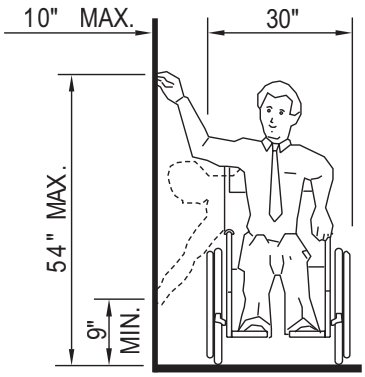

(b) HIGH AND LOW SIDE REACH LIMITS

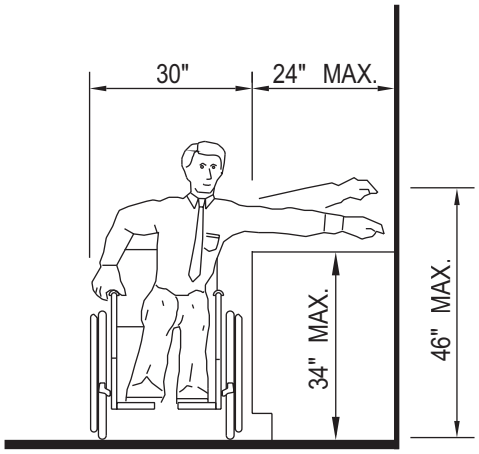

(c) MAXIMUM SIDE REACH OVER OBSTRUCTION

THESE DIAGRAMS ILLUSTRATE THE SPECIFIC REQUIREMENTS OF THESE REGULATIONS AND ARE INTENDED ONLY AS AN AID FOR BUILDING DESIGN AND CONSTRUCTION

FIGURE 11B-5D—SIDE REACH

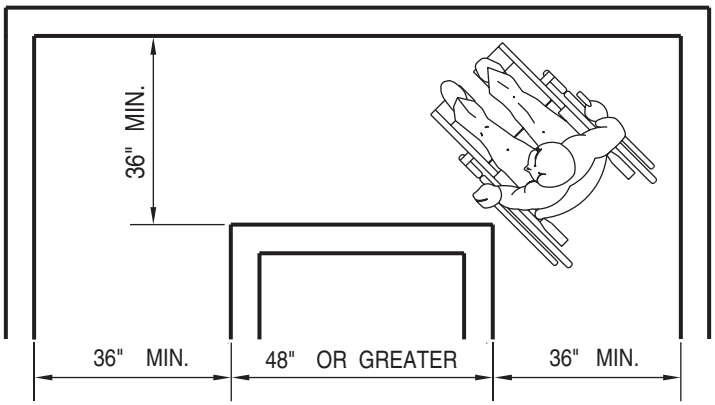

(a) 90° TURN

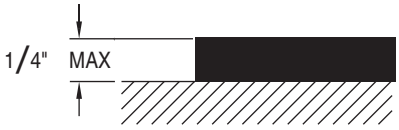

(c) CHANGE IN LEVEL

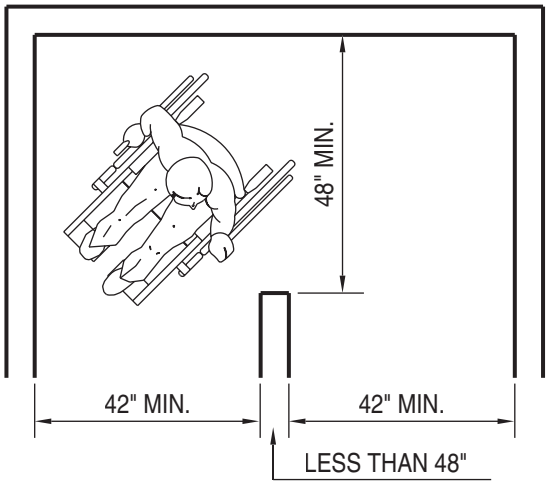

(d) TURNS AROUND AN OBSTRUCTION

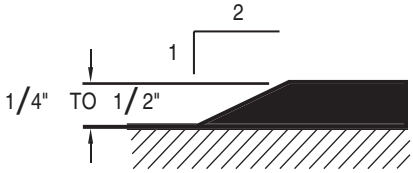

(d) CHANGE IN LEVEL

THESE DIAGRAMS ILLUSTRATE THE SPECIFIC REQUIREMENTS OF THESE REGULATIONS AND ARE INTENDED ONLY AS AN AID FOR BUILDING DESIGN AND CONSTRUCTION

FIGURE 11B-5E—WIDTH OF ACCESSIBLE ROUTE

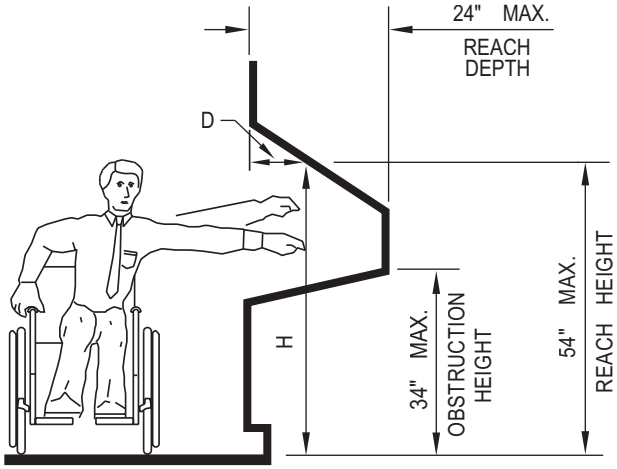

(d) ATM REACH RANGE LIMITS

CORRESPONDING REACH HEIGHTS FOR GIVEN DEPTHS :

WHEN D = 10" OR LESS, H = 54" MAX.
WHEN D = 10" , H = 53.5" MAX.
WHEN D = 12" , H = 53.0" MAX.
WHEN D = 13" , H = 52.5" MAX.
WHEN D = 14" , H = 51.5" MAX.
WHEN D = 15" , H = 51.0" MAX.
WHEN D = 16" , H = 50.5" MAX.
WHEN D = 17" , H = 50.0" MAX.
WHEN D = 18" , H = 49.5" MAX.
WHEN D = 19" , H = 49.0" MAX.
WHEN D = 20" , H = 48.5" MAX.
WHEN D = 21" , H = 47.5" MAX.
WHEN D = 22" , H = 47.0" MAX.
WHEN D = 23" , H = 46.5" MAX.
WHEN D = 24" , H = 46.0" MAX.

THIS DIAGRAM ILLUSTRATES THE SPECIFIC REQUIREMENTS OF THESE REGULATIONS AND IS INTENDED ONLY AS AN AID FOR BUILDING DESIGN AND CONSTRUCTION

FIGURE 11B-5F—ATM REACH RANGE LIMITS

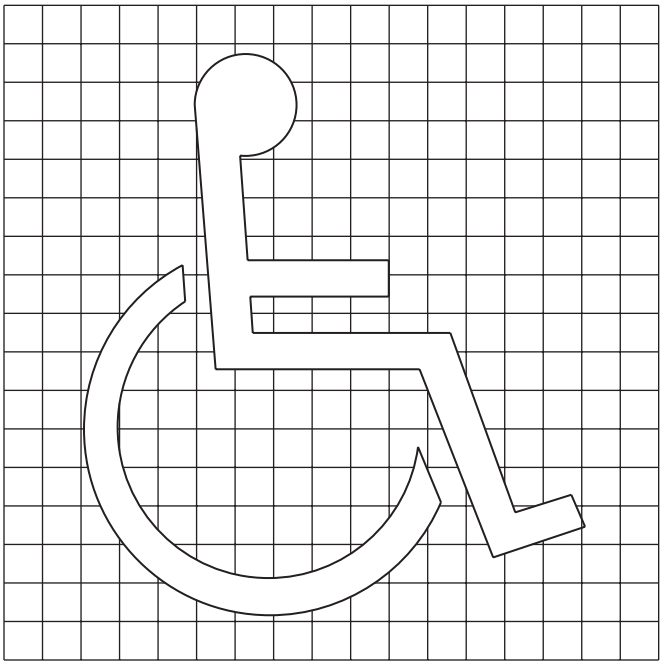

(a) SYMBOL PROPORTIONS

(b) DISPLAY CONDITIONS

THESE DIAGRAMS ILLUSTRATE THE SPECIFIC REQUIREMENTS OF THESE REGULATIONS AND ARE INTENDED ONLY AS AN AID FOR BUILDING DESIGN AND CONSTRUCTION.

FIGURE 11B-6—INTERNATIONAL ACCESSIBILITY SYMBOL

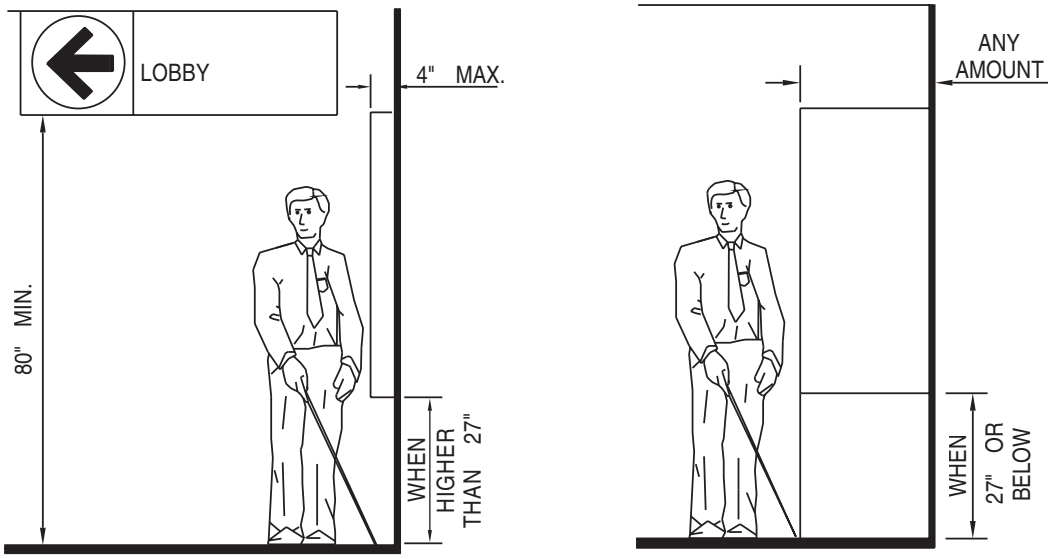

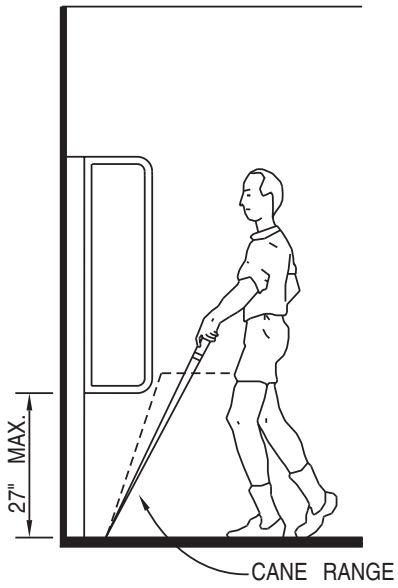

WALKING PERPENDICULAR TO WALL

THESE DIAGRAMS ILLUSTRATE THE SPECIFIC REQUIREMENTS OF THESE REGULATIONS AND ARE INTENDED ONLY AS AN AID FOR BUILDING DESIGN AND CONSTRUCTION.

FIGURE 11B-7A—PROTRUDING OBJECTS

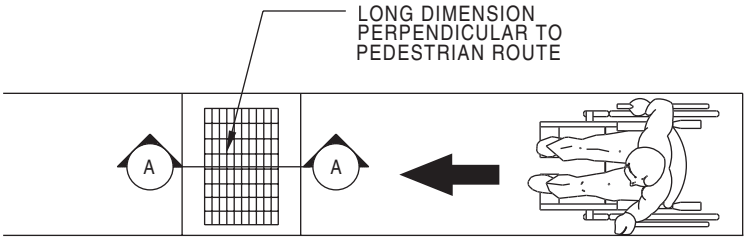

PLAN

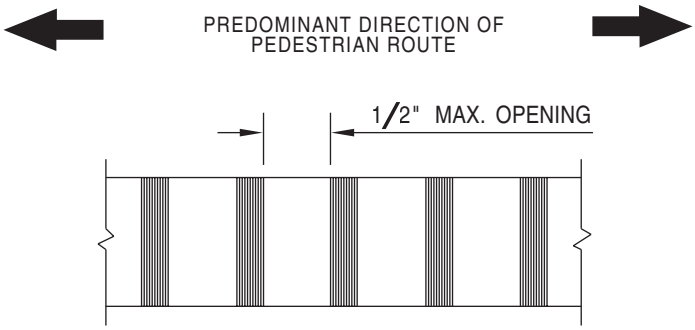

SECTION A–A THROUGH GRATE

(a) GRATE ORIENTATION TO PATH OF TRAVEL

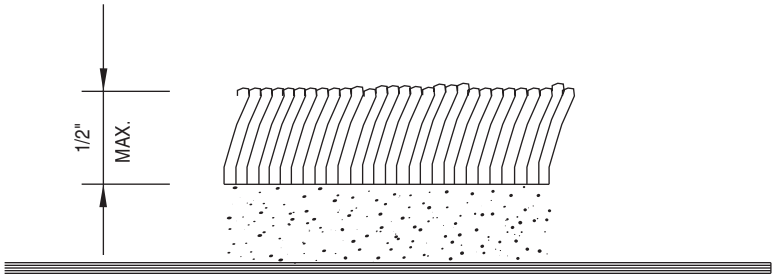

(b) CARPET PILE THICKNESS

THESE DIAGRAMS ILLUSTRATE THE SPECIFIC REQUIREMENTS OF THESE REGULATIONS AND ARE INTENDED ONLY AS AN AID FOR BUILDING DESIGN AND CONSTRUCTION.

FIGURE 11B-7B

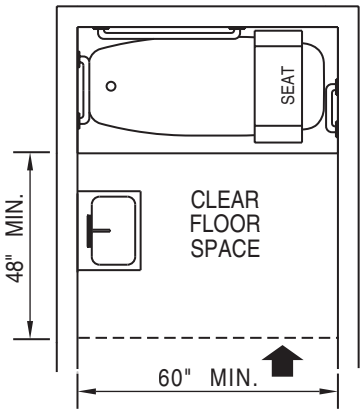

(a) WITH SEAT IN TUB

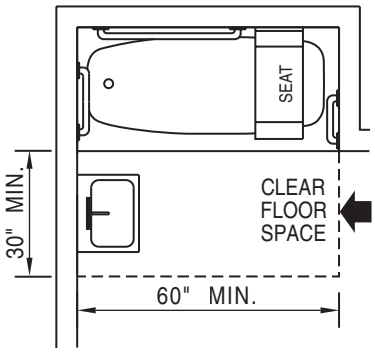

(b) WITH SEAT IN TUB

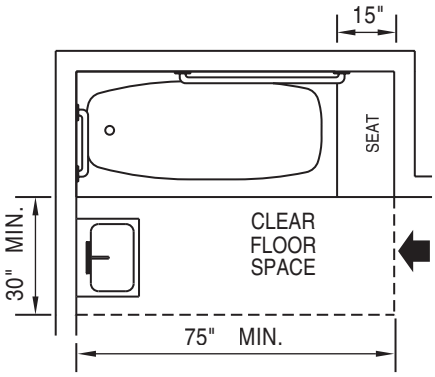

(c) WITH SEAT AT HEAD OF TUB

THESE DIAGRAMS ILLUSTRATE THE SPECIFIC REQUIREMENTS OF THESE REGULATIONS AND ARE INTENDED ONLY AS AN AID FOR BUILDING DESIGN AND CONSTRUCTION.

FIGURE 11B-8—CLEAR FLOOR SPACE AT BATHTUBS

(a) WATER CLOSET IN ADAPTABLE BATHROOMS

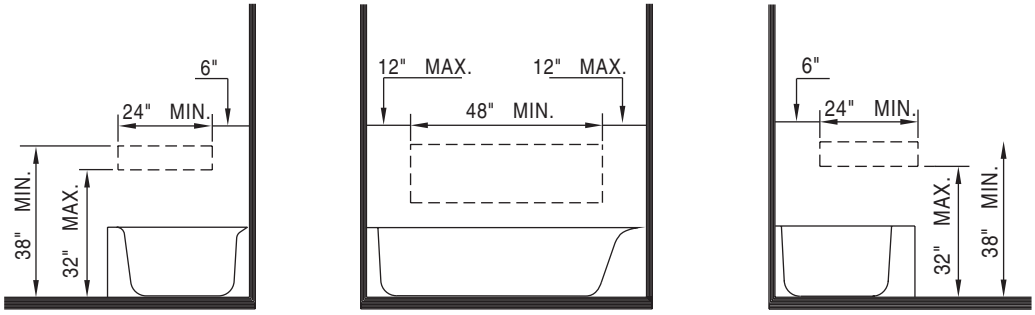

NOTE : THE AREA OUTLINED IN DASHED LINES REPRESENT LOCATIONS FOR FUTURE INSTALLATION OF GRAB BARS FOR TYP. FIXTURE CONFIGURATIONS

(b) LOCATION OR GRAB BAR REINFORCEMENTS FOR ADAPTABLE BATHTUBS

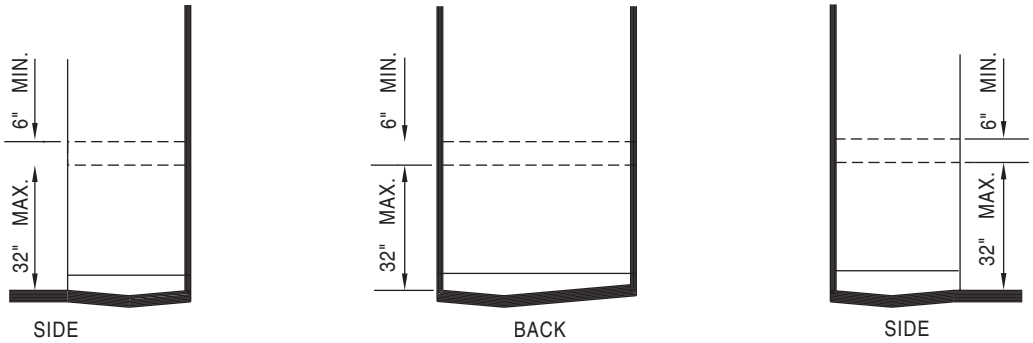

NOTE : THE AREA OUTLINED IN DASHED LINES REPRESENT LOCATION OF FUTURE INSTALLATION OF GRAB BARS

(C) LOCATION OR GRAB BAR REINFORCEMENTS FOR ADAPTABLE SHOWERS

THESE DIAGRAMS ILLUSTRATE THE SPECIFIC REQUIREMENTS OF THESE REGULATIONS AND ARE INTENDED ONLY AS AN AID FOR BUILDING DESIGN AND CONSTRUCTION.

FIGURE 11B-9A

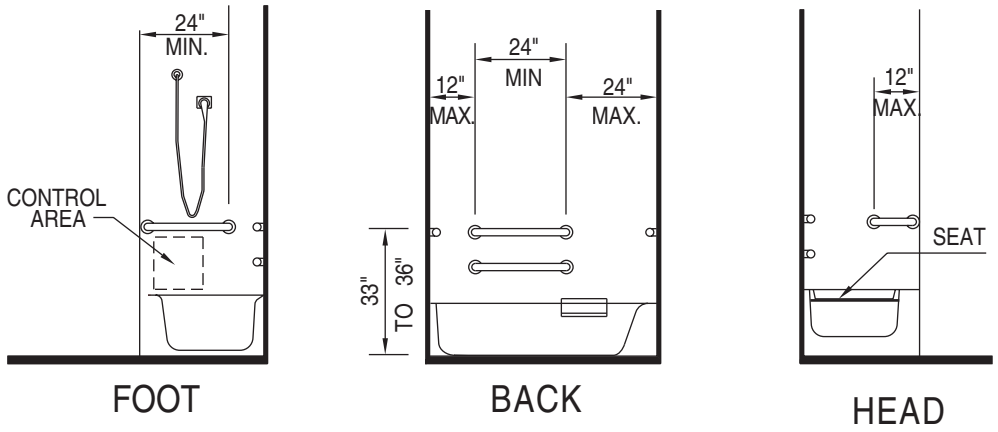

(a) WITH SEAT IN TUB

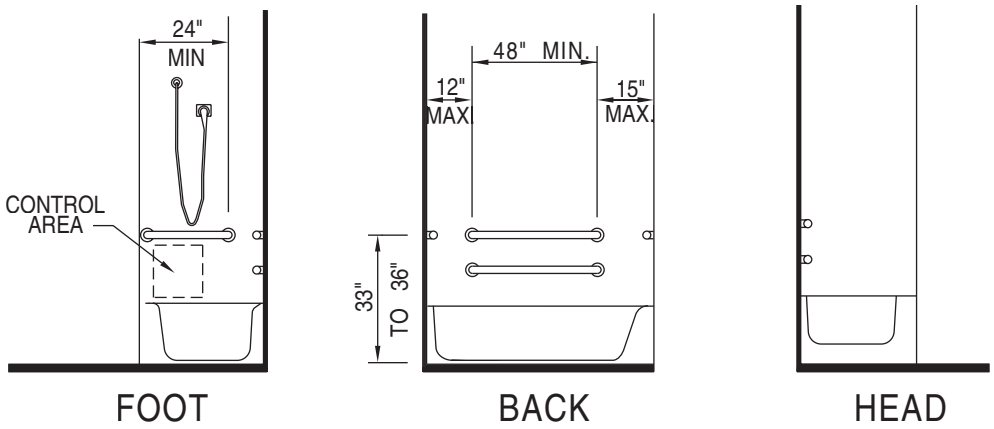

(b) WITH SEAT AT HEAD OF TUB

THESE DIAGRAMS ILLUSTRATE THE SPECIFIC REQUIREMENTS OF THESE REGULATIONS AND ARE INTENDED ONLY AS AN AID FOR BUILDING DESIGN AND CONSTRUCTION.

FIGURE 11B-9B—GRAB BARS AT BATHTUBS

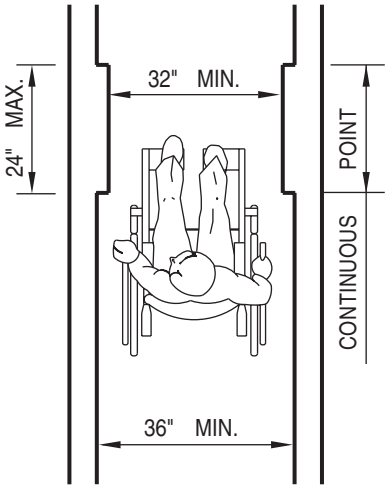

FIGURE 11B-10—MINIMUM CLEAR WIDTH FOR SINGLE WHEELCHAIR

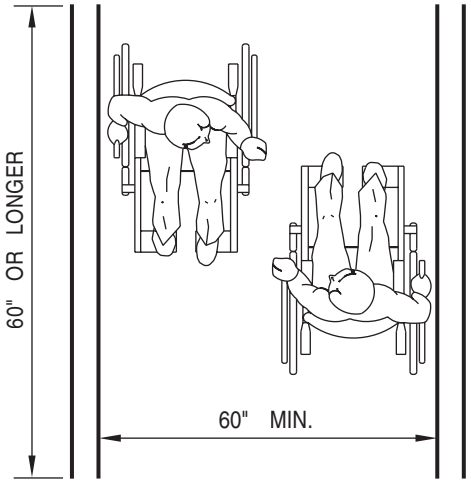

FIGURE 11B-11—MINIMUM CLEAR WIDTH FOR TWO WHEELCHAIRS

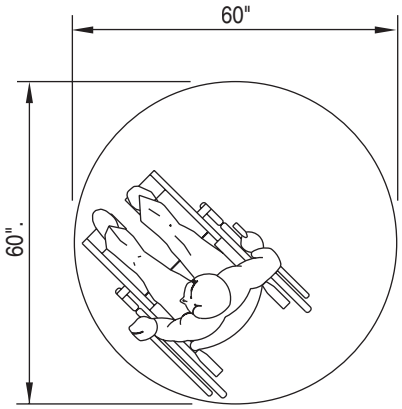

(a) 60 INCHES DIAMETER SPACE

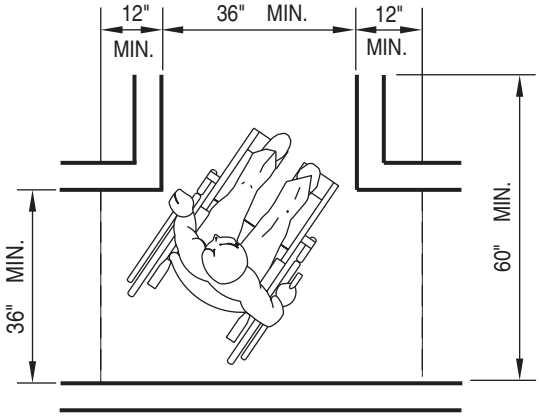

(b) T–SHAPED SPACE FOR 180° TURNS

THESE DIAGRAMS ILLUSTRATE THE SPECIFIC REQUIREMENTS OF THESE REGULATIONS AND ARE INTENDED ONLY AS AN AID FOR BUILDING DESIGN AND CONSTRUCTION.

FIGURE 11B-12—WHEELCHAIR TURNING SPACE

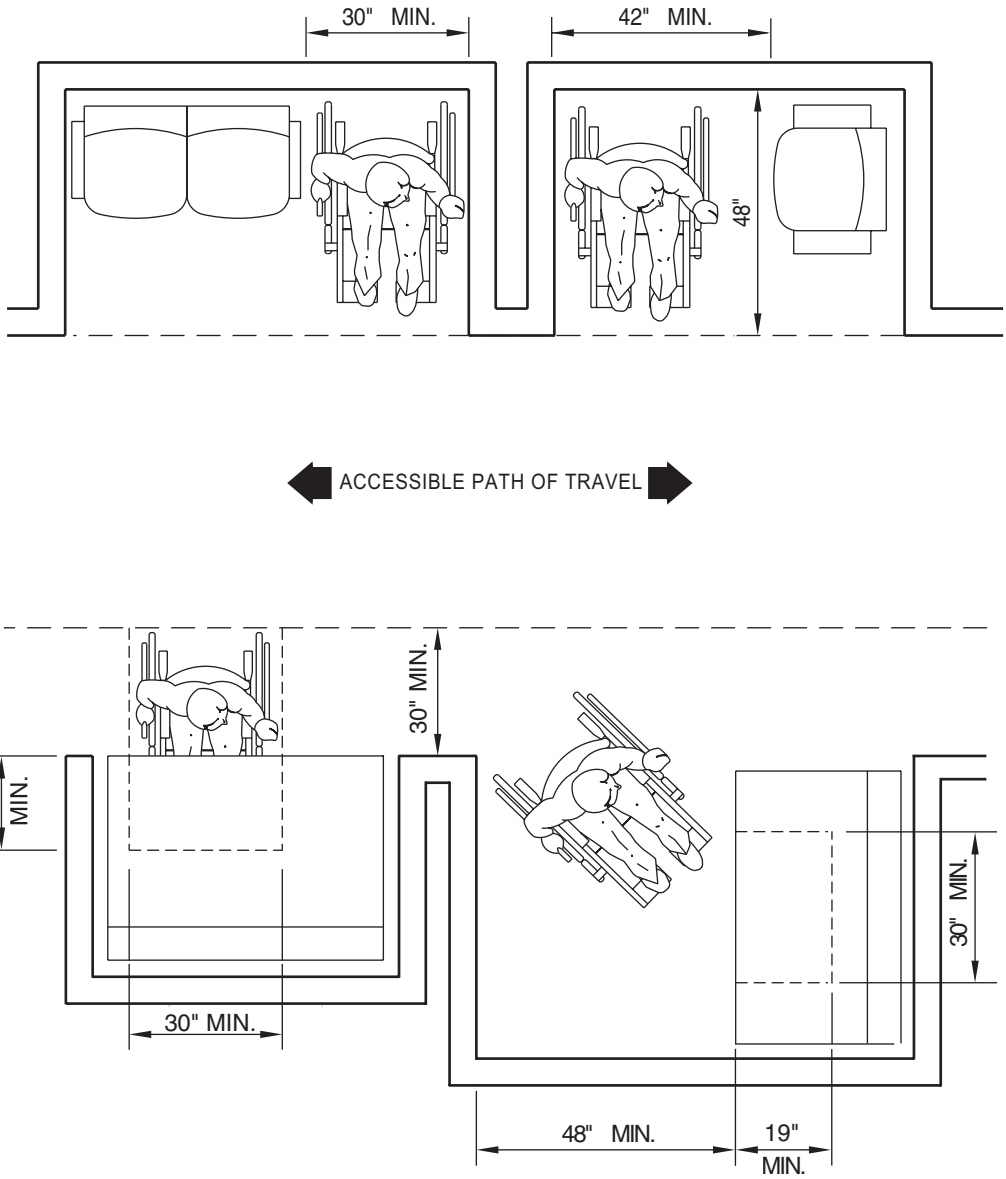

THESE DIAGRAMS ILLUSTRATE THE SPECIFIC REQUIREMENTS OF THESE REGULATIONS AND ARE INTENDED ONLY AS AN AID FOR BUILDING DESIGN AND CONSTRUCTION.

FIGURE 11B-13—MINIMUM CLEARANCES FOR SEATING AND TABLE

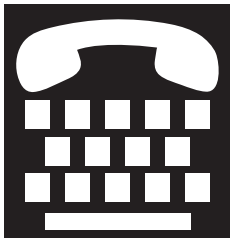

FIGURE 11B-14A— INTERNATIONAL *SYMBOL OF ACCESS FOR HEARING IMPAIRED

FIGURE 11B-14B—INTERNATIONAL SYMBOL OF ACCESS FOR HEARING IMPAIRED**

FIGURE 11B-14C— INTERNATIONAL SYMBOL OF ACCESS FOR HEARING ***IMPAIRED

THESE DIAGRAMS ILLUSTRATE THE SPECIFIC REQUIREMENTS OF THESE REGULATIONS AND ARE INTENDED ONLY AS AN AID FOR BUILDING DESIGN AND CONSTRUCTION.

* This title should read "INTERNATIONAL TTY SYMBOL."

** Title should read "VOLUME CONTROL TELEPHONES."

*** Title should read "INTERNATIONAL SYMBOL OF ACCESS FOR HEARING LOSS."

These titles will be corrected in Rulemaking.

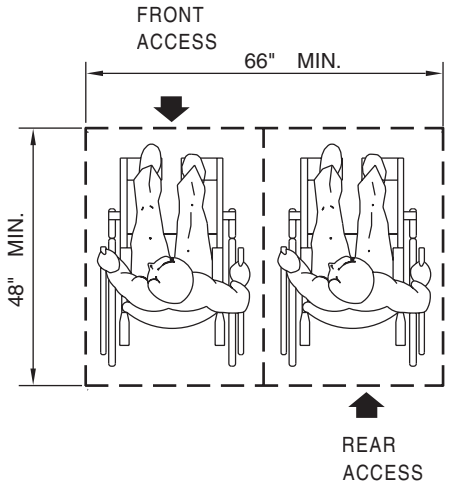

(a) FORWARD OR REAR ACCESS

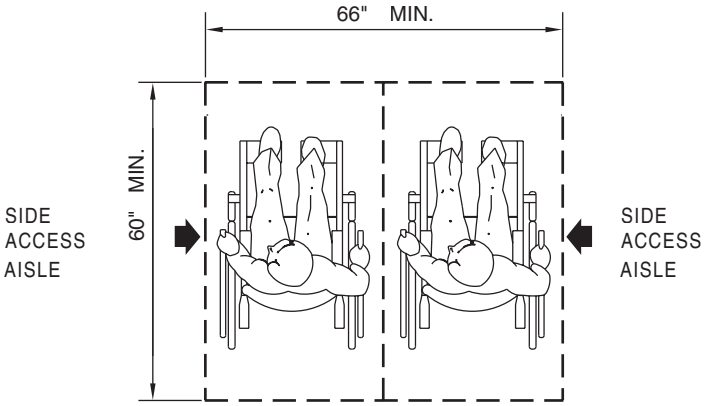

(b) SIDE ACCESS

NOTE:
EACH INDIVIDUAL SEATING POSITION HAS AN EGRESS ROUTE WHICH DOES NOT CROSS THROUGH OTHER SEATING POSITIONS.

THESE DIAGRAMS ILLUSTRATE THE SPECIFIC REQUIREMENTS OF THESE REGULATIONS AND ARE INTENDED ONLY AS AN AID FOR BUILDING DESIGN AND CONSTRUCTION.

FIGURE 11B-15—SPACE REQUIREMENTS FOR WHEELCHAIR SEATING

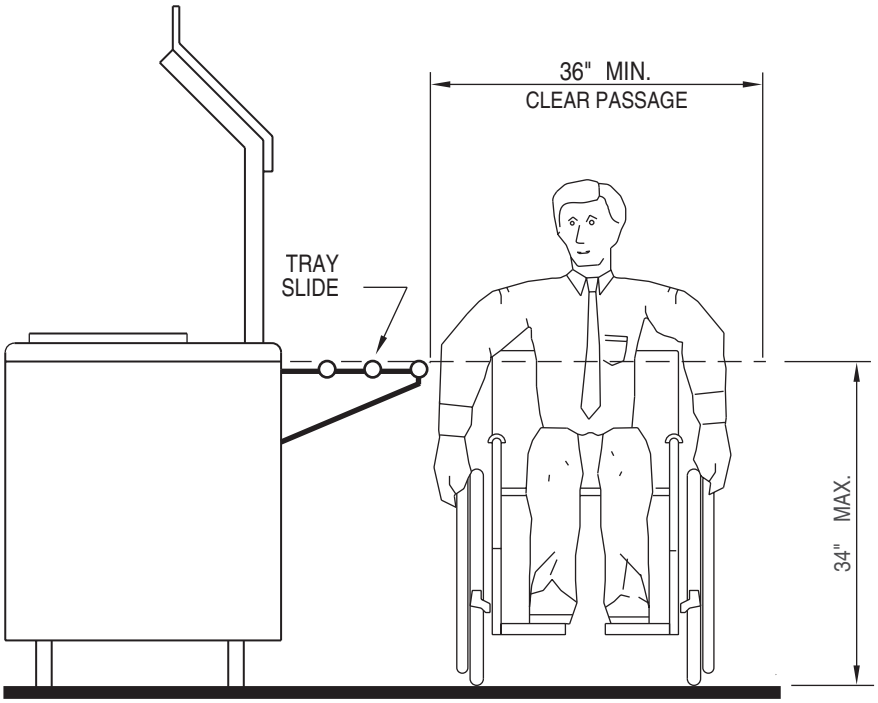

FIGURE 11B-16—FOOD SERVICE LINES

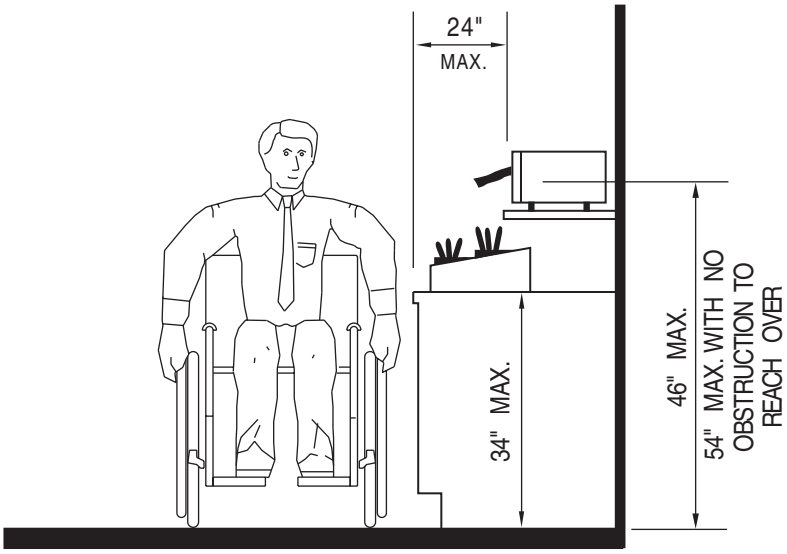

THESE DIAGRAMS ILLUSTRATE THE SPECIFIC REQUIREMENTS OF THESE REGULATIONS AND ARE INTENDED ONLY AS AN AID FOR BUILDING DESIGN AND CONSTRUCTION.

FIGURE 11B-17—TABLEWARE AREAS

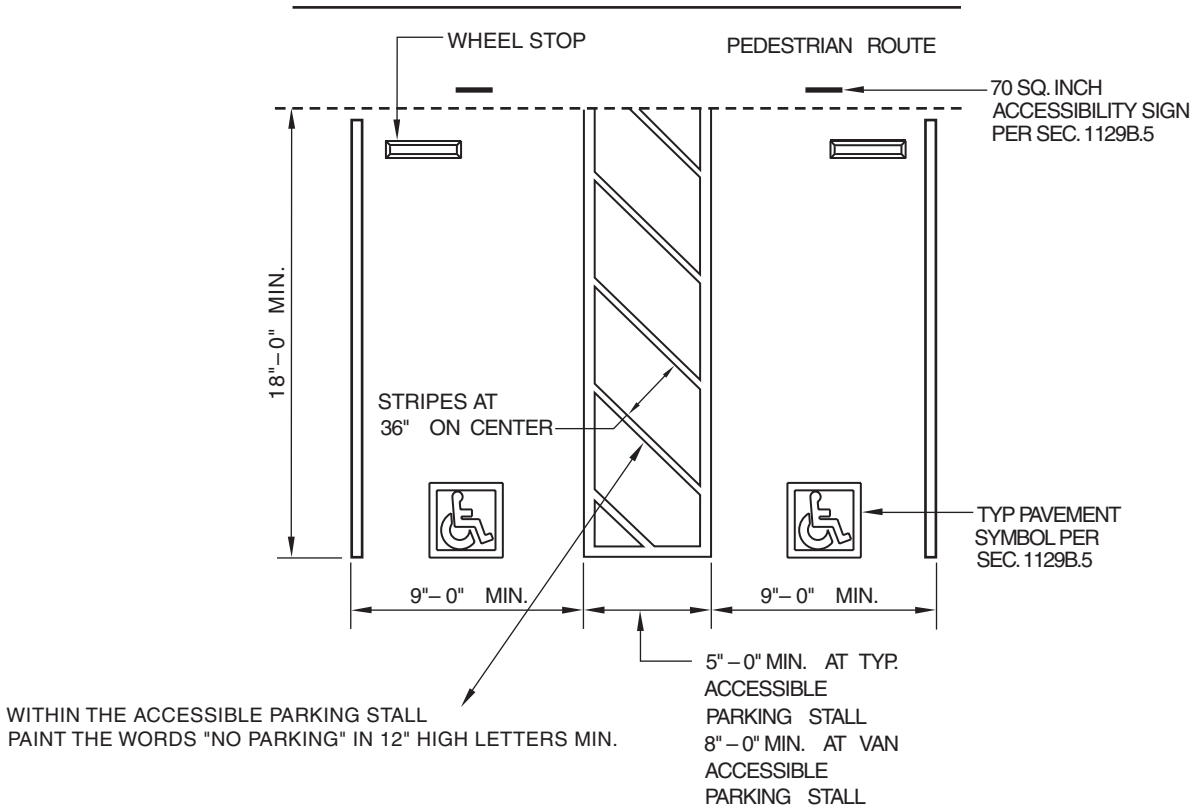

THIS DIAGRAM ILLUSTRATES THE SPECIFIC REQUIREMENTS OF THESE REGULATIONS AND IS INTENDED ONLY AS AN AID FOR BUILDING DESIGN AND CONSTRUCTION.

FIGURE 11B-18A—DOUBLE PARKING STALLS

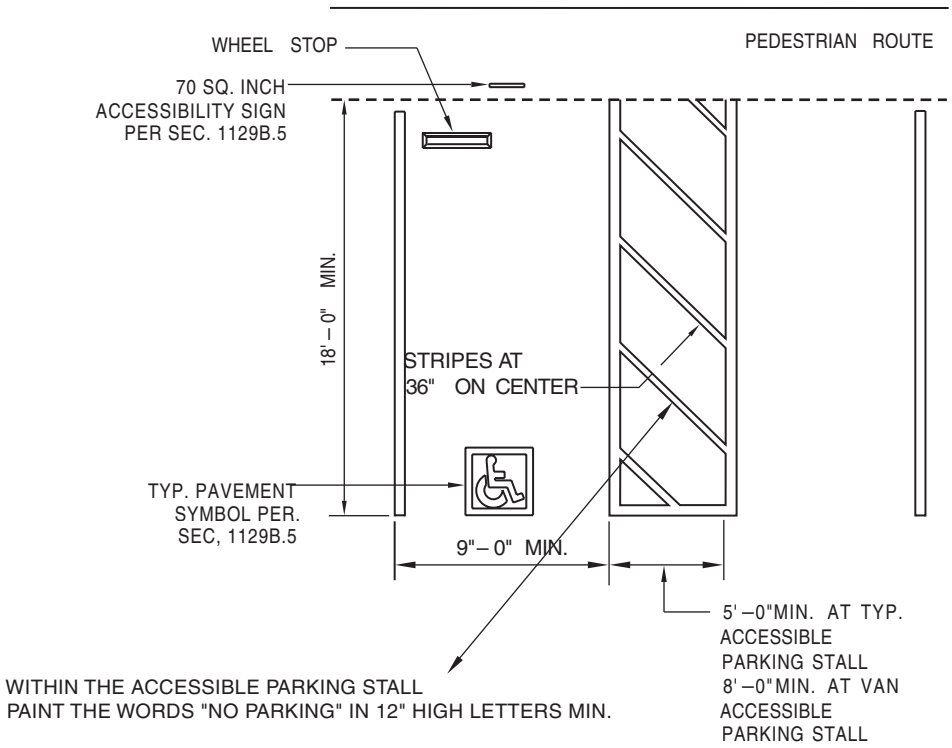

FIGURE 11B-18B—SINGLE PARKING STALLS

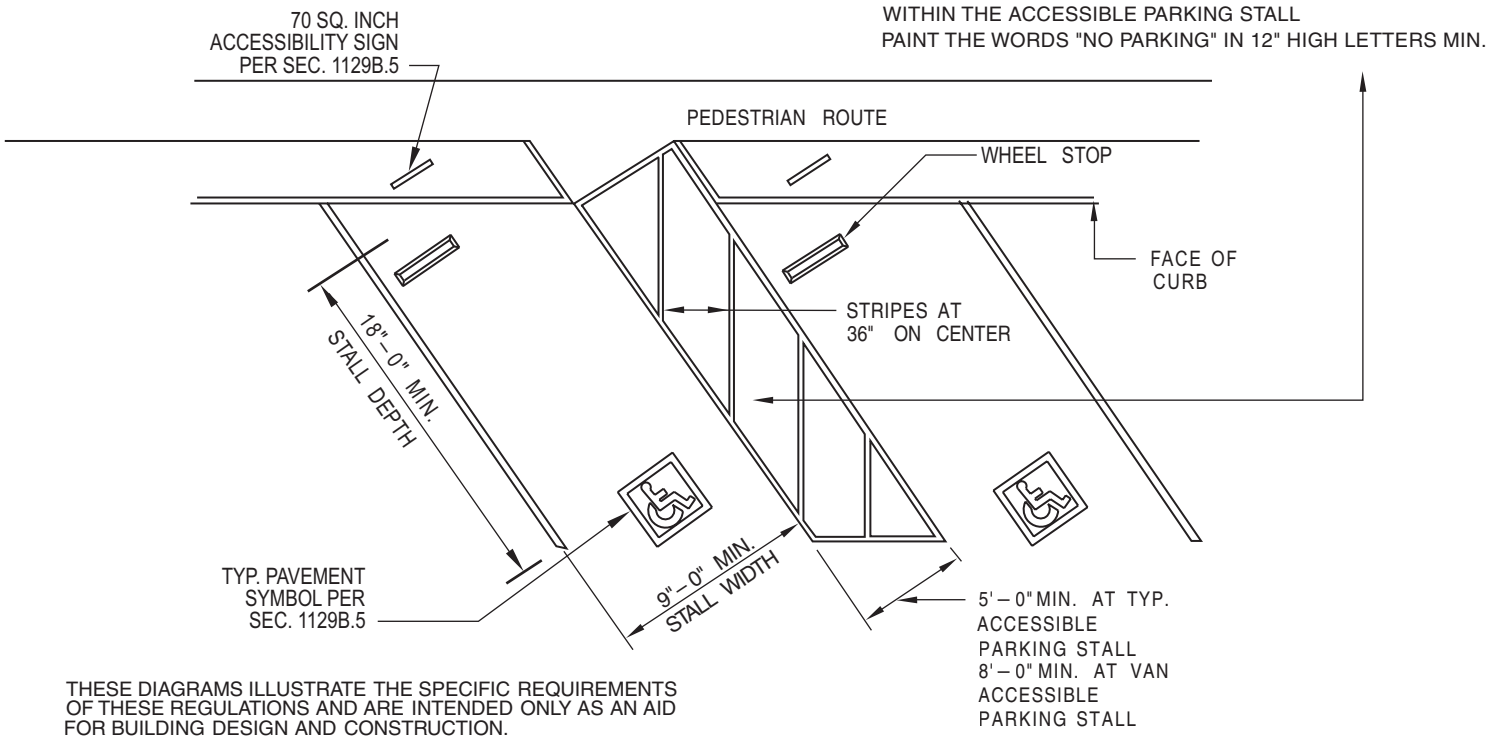

FIGURE 11B-18C—DIAGONAL PARKING STALLS

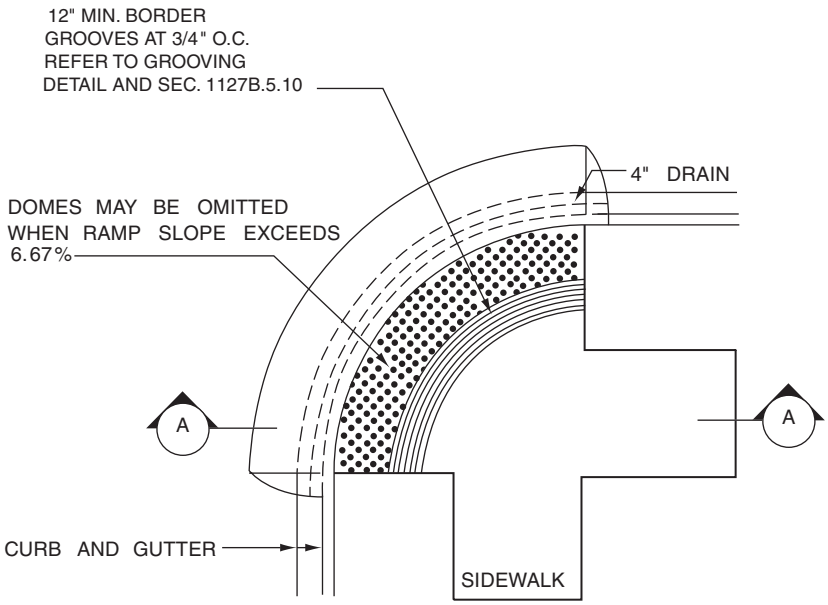

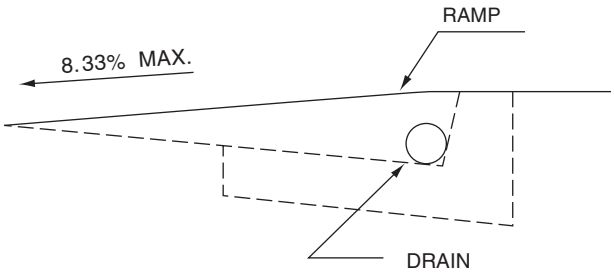

SECTION A–A

THESE DIAGRAMS ILLUSTRATE THE SPECIFIC REQUIREMENTS OF THESE REGULATIONS AND ARE INTENDED ONLY AS AN AID FOR BUILDING DESIGN AND CONSTRUCTION.

FIGURE 11B-19A—CURB DETAILS

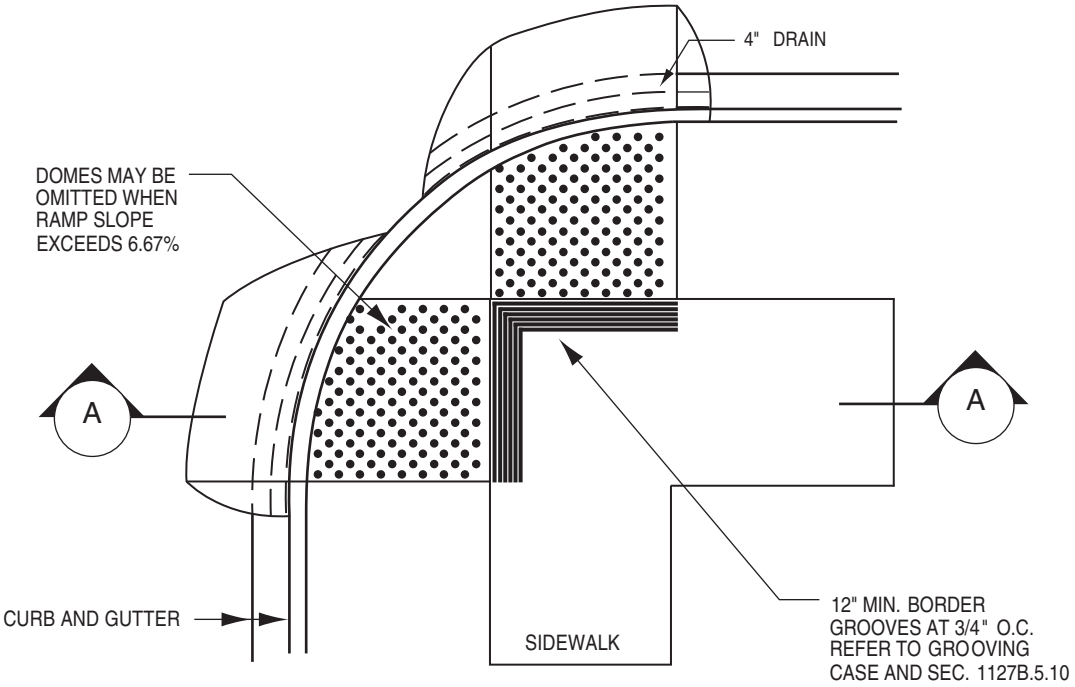

SEE FIGURE 11B-19A

THIS DIAGRAM ILLUSTRATES THE SPECIFIC REQUIREMENTS OF THESE REGULATIONS AND IS INTENDED ONLY AS AN AID FOR BUILDING DESIGN AND CONSTRUCTION.

FIGURE 11B-19B—CURB DETAIL

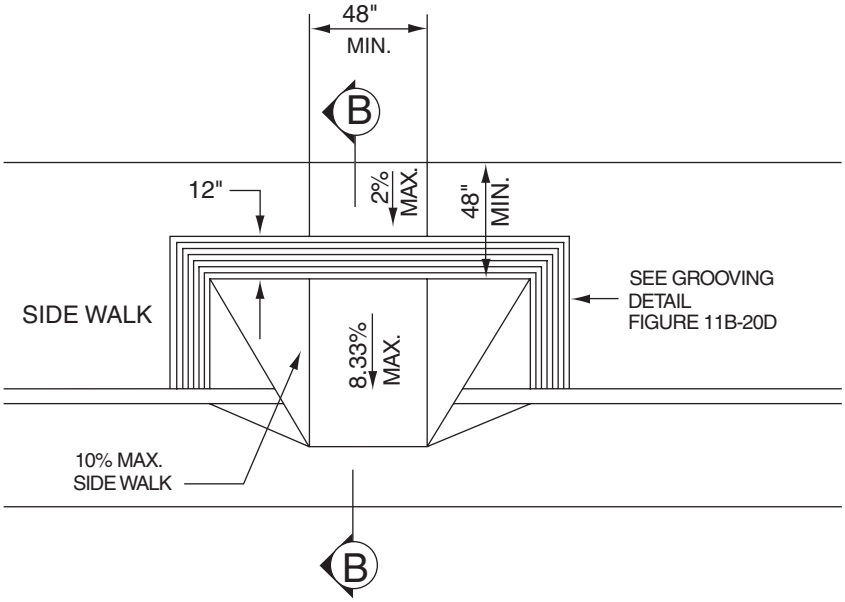

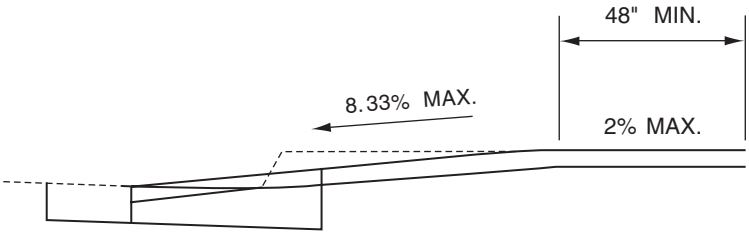

SECTION B–B

THESE DIAGRAMS ILLUSTRATE THE SPECIFIC REQUIREMENTS OF THESE REGULATIONS AND ARE INTENDED ONLY AS AN AID FOR BUILDING DESIGN AND CONSTRUCTION.

FIGURE 11B-19C—CURB DETAIL

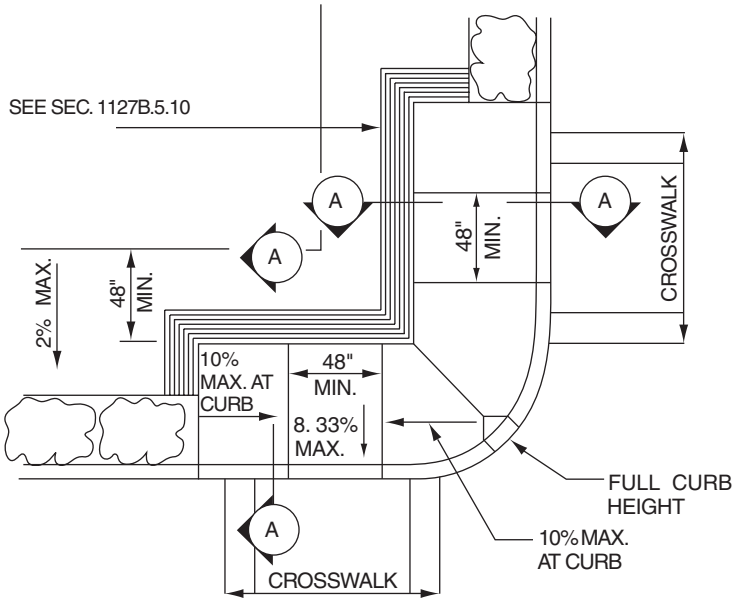

CASE A

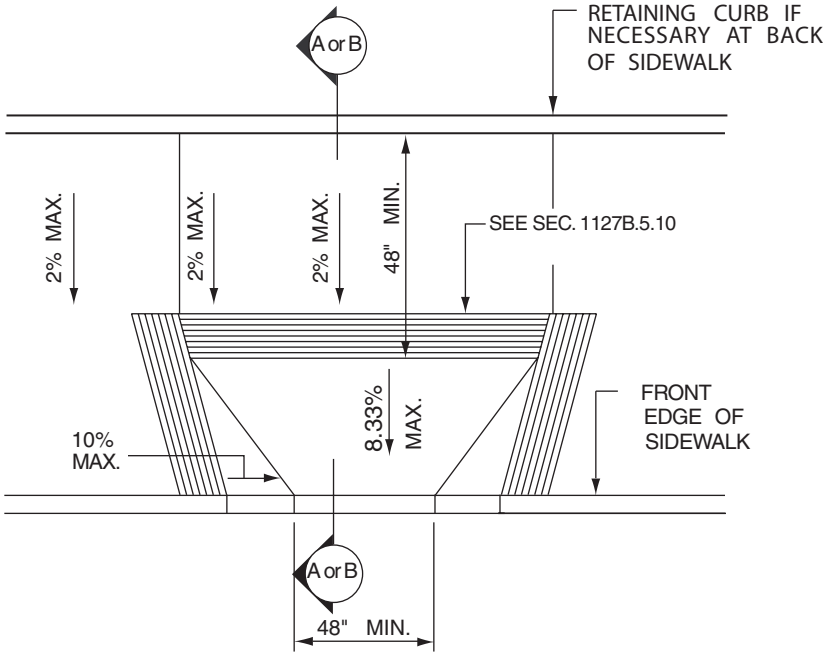

CASE B

THESE DIAGRAMS ILLUSTRATE THE SPECIFIC REQUIREMENTS OF THESE REGULATIONS AND ARE INTENDED ONLY AS AN AID FOR BUILDING DESIGN AND CONSTRUCTION.

FIGURE 11B-20A—CURB DETAIL—CASES A AND B

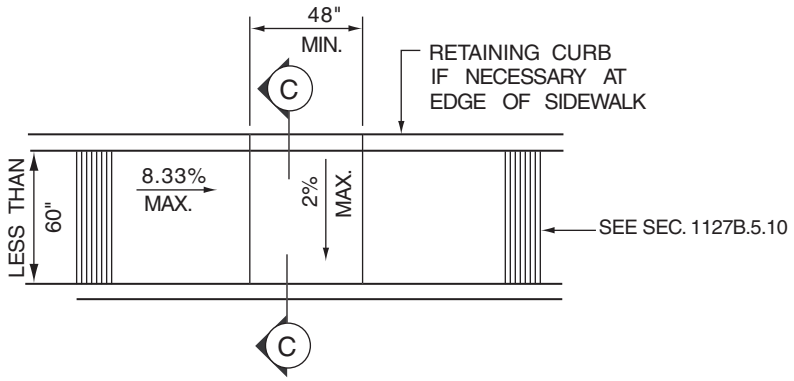

CASE C

SIDEWALK LESS THAN 60" WIDE

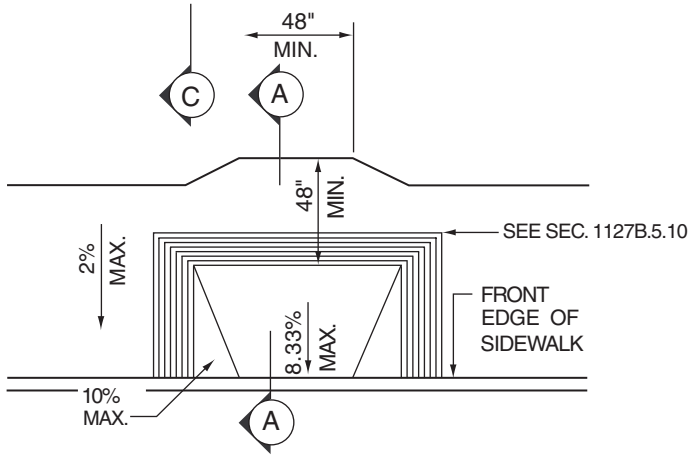

CASE D

THESE DIAGRAMS ILLUSTRATE THE SPECIFIC REQUIREMENTS OF THESE REGULATIONS AND ARE INTENDED ONLY AS AN AID FOR BUILDING DESIGN AND CONSTRUCTION.

FIGURE 11B-20B—CURB DETAIL—CASES C AND D

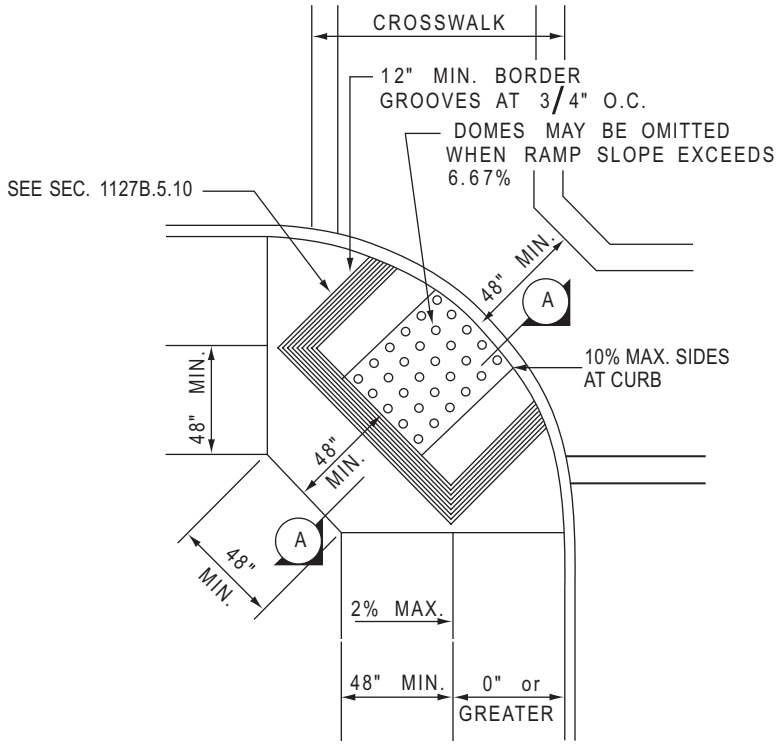

CASE E

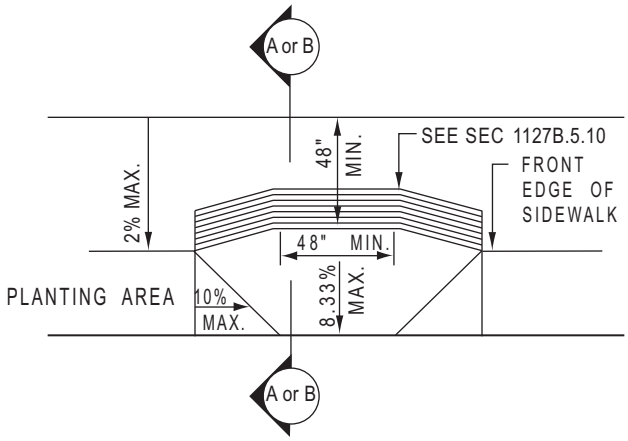

CASE F

THESE DIAGRAMS ILLUSTRATE THE SPECIFIC REQUIREMENTS OF THESE REGULATIONS AND ARE INTENDED ONLY AS AN AID FOR BUILDING DESIGN AND CONSTRUCTION.

FIGURE 11B-20C—CURB DETAIL—CASES E AND F

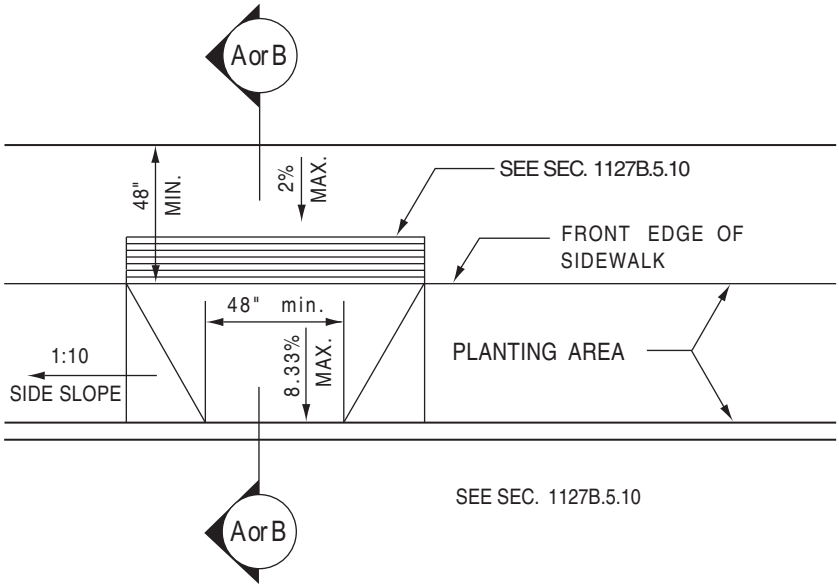

CASE G

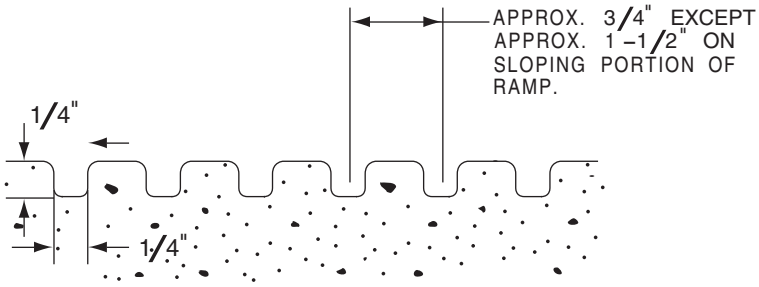

GROOVING DETAIL

CASE H

THESE DIAGRAMS ILLUSTRATE THE SPECIFIC REQUIREMENTS OF THESE REGULATIONS AND ARE INTENDED ONLY AS AN AID FOR BUILDING DESIGN AND CONSTRUCTION.

FIGURE 11B-20D—CURB DETAIL—CASES G AND H

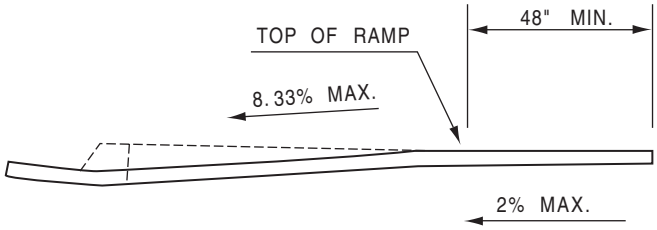

SECTION A–A

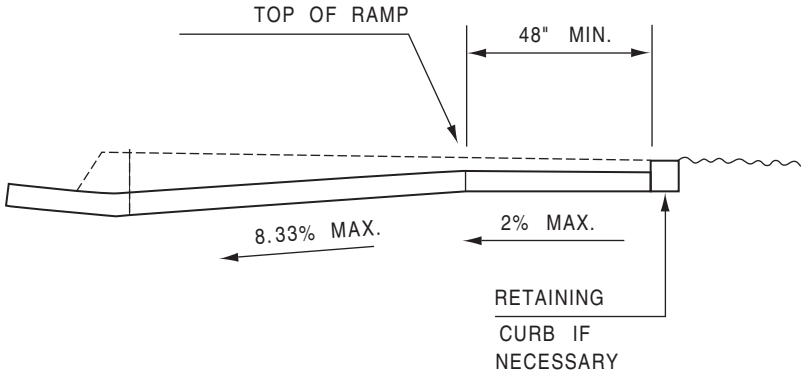

SECTION B–B

DEPRESS ENTIRE SIDEWALK AS REQUIRED

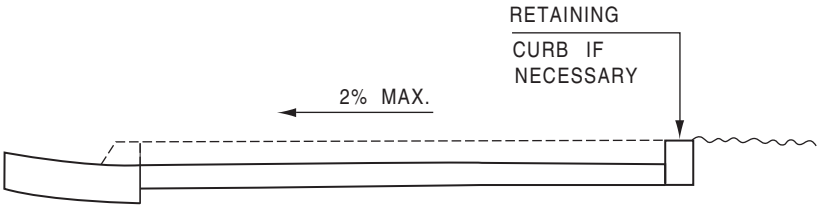

SECTION C–C

THESE DIAGRAMS ILLUSTRATE THE SPECIFIC REQUIREMENTS OF THESE REGULATIONS AND ARE INTENDED ONLY AS AN AID FOR BUILDING DESIGN AND CONSTRUCTION.

FIGURE 11B-20E—CURB SECTIONS

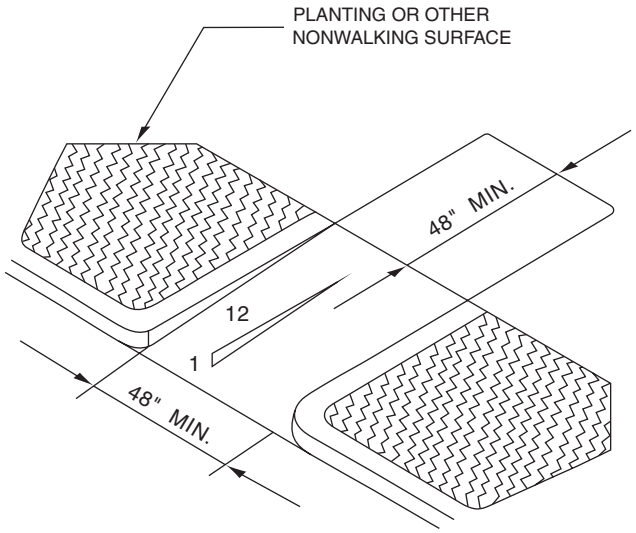

(a)

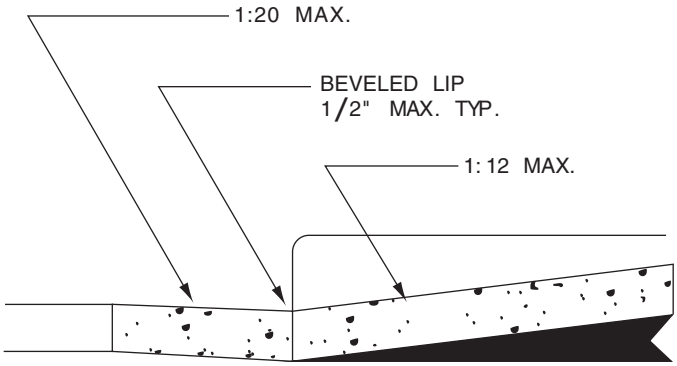

(b)

THESE DIAGRAMS ILLUSTRATE THE SPECIFIC REQUIREMENTS OF THESE REGULATIONS AND ARE INTENDED ONLY AS AN AID FOR BUILDING DESIGN AND CONSTRUCTION.

FIGURE 11B-21—RETURNED CURB STYLE

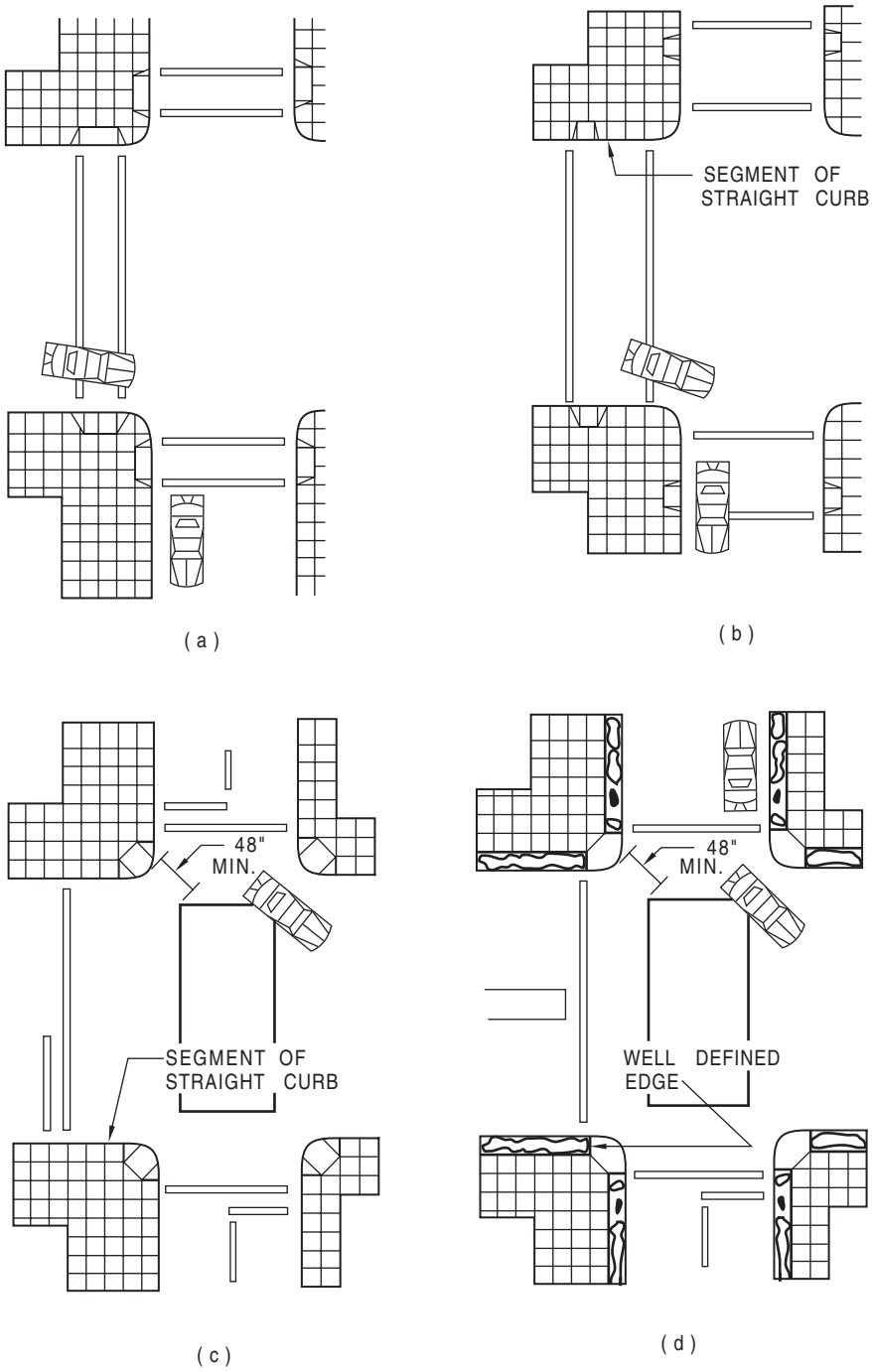

THESE DIAGRAMS ILLUSTRATE THE SPECIFIC REQUIREMENTS OF THESE REGULATIONS AND ARE INTENDED ONLY AS AN AID FOR BUILDING DESIGN AND CONSTRUCTION.

FIGURE 11B-22—CURB RAMPS AT MARKED CROSSING

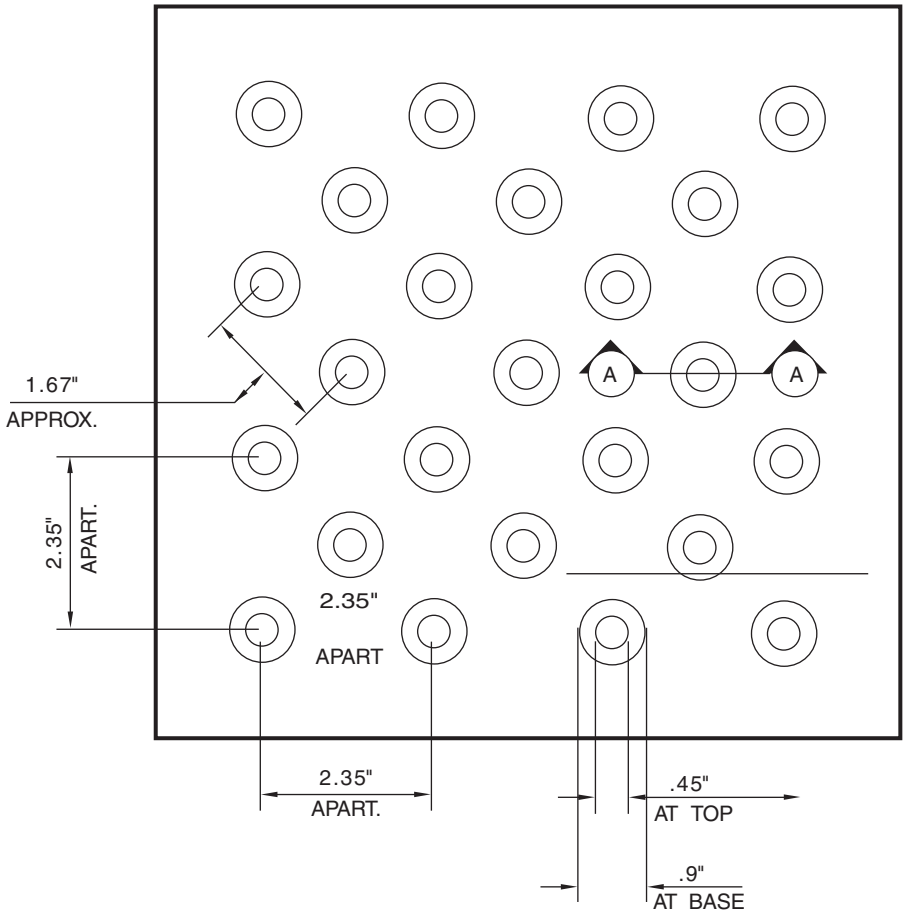

TYPICAL PLAN

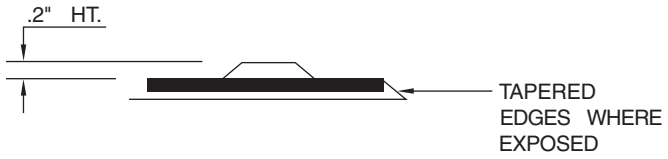

TYPICAL SECTION A–A

THESE DIAGRAMS ILLUSTRATE THE SPECIFIC REQUIREMENTS OF THESE REGULATIONS AND ARE INTENDED ONLY AS AN AID FOR BUILDING DESIGN AND CONSTRUCTION.

FIGURE 11B-23A—TRUNCATED DOMES

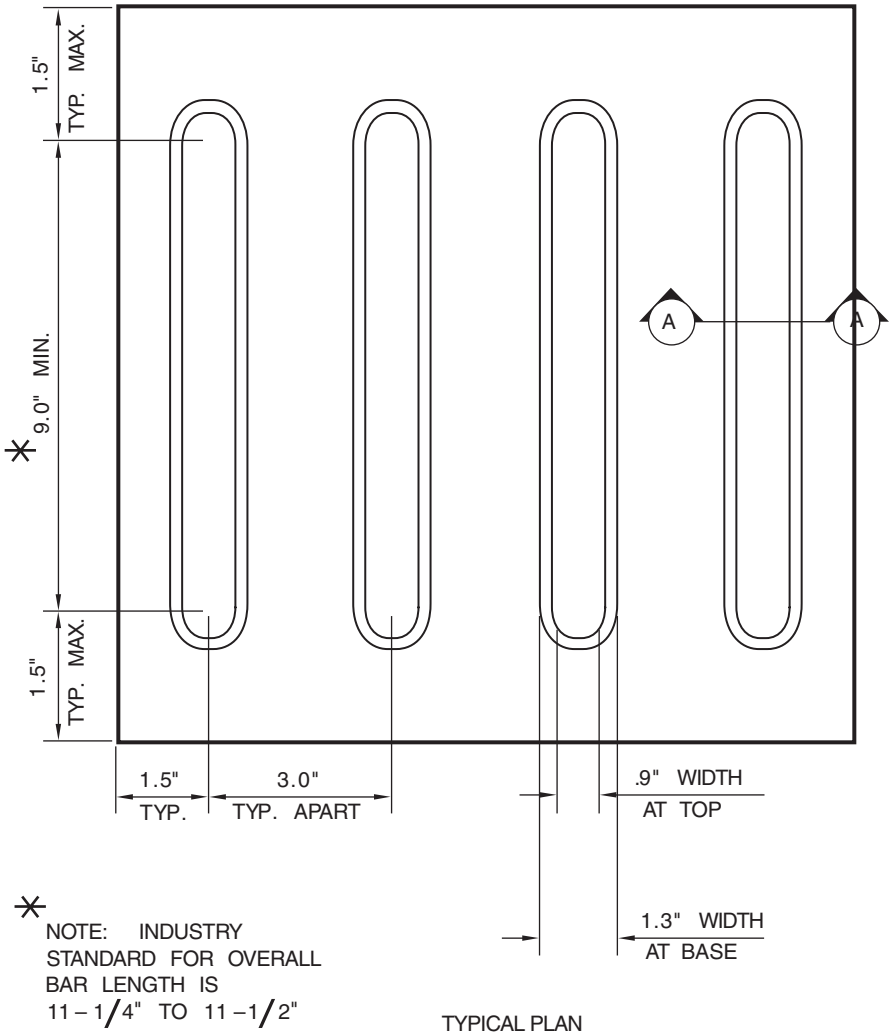

TYPICAL PLAN

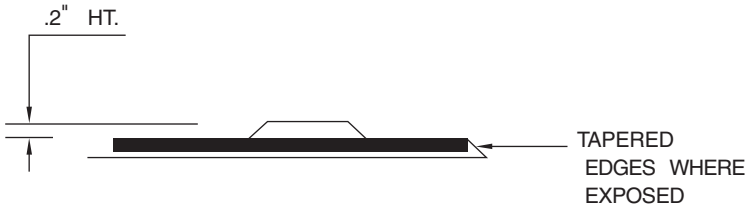

TYPICAL SECTION A–A

THESE DIAGRAMS ILLUSTRATE THE SPECIFIC REQUIREMENTS OF THESE REGULATIONS AND ARE INTENDED ONLY AS AN AID FOR BUILDING DESIGN AND CONSTRUCTION.

FIGURE 11B-23B—DIRECTIONAL BARS

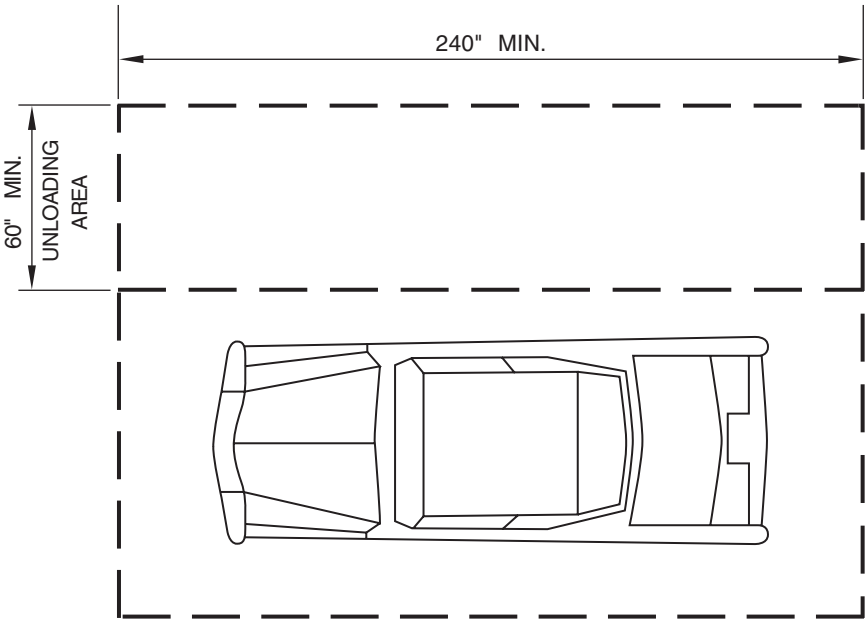

THIS DIAGRAM ILLUSTRATES THE SPECIFIC REQUIREMENTS OF THESE REGULATIONS AND IS INTENDED ONLY AS AN AID FOR BUILDING DESIGN AND CONSTRUCTION.

FIGURE 11B-24—ACCESS AISLE AT PASSENGER LOADING ZONES

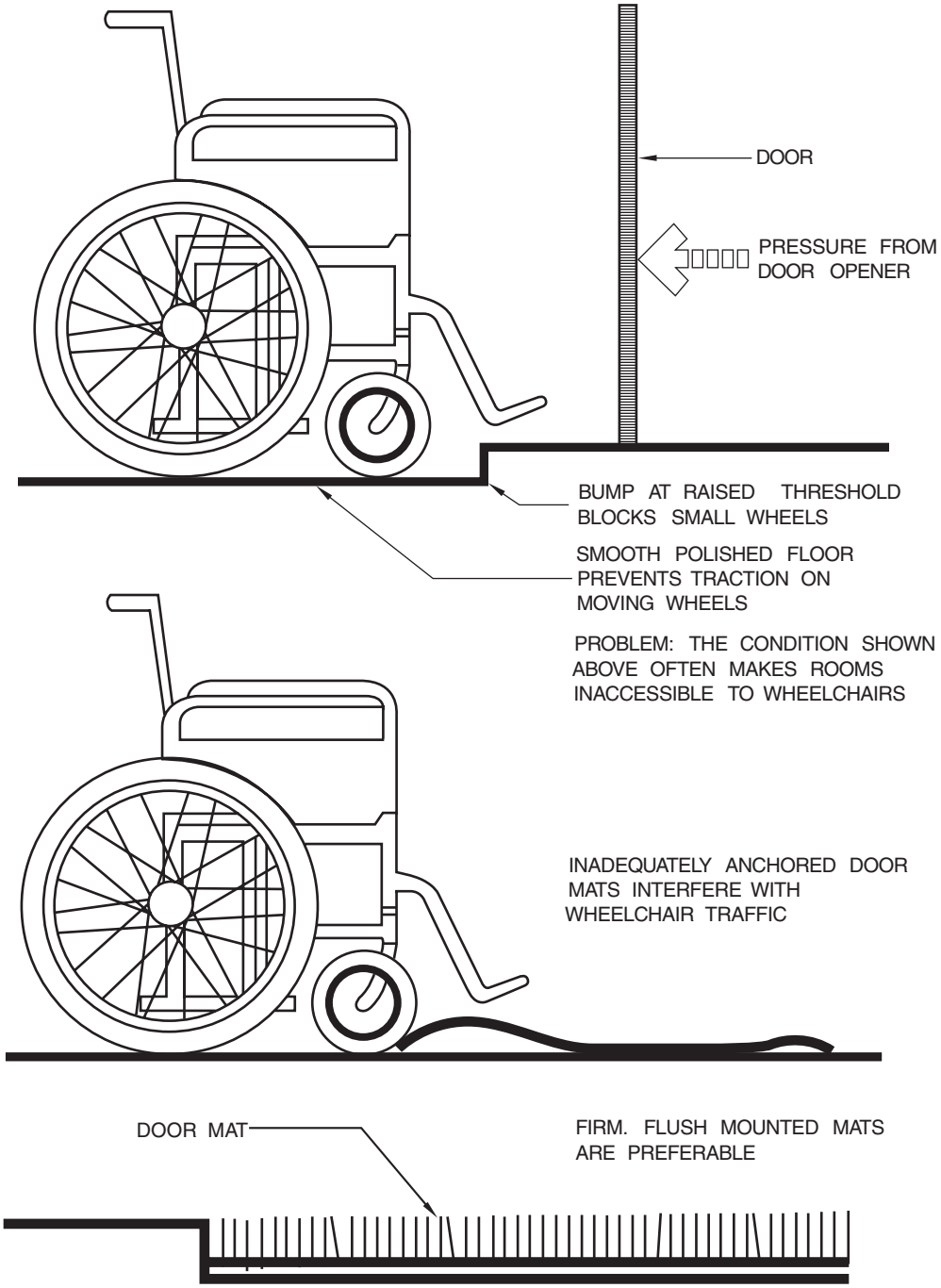

THESE DIAGRAMS ILLUSTRATE THE SPECIFIC REQUIREMENTS OF THESE REGULATIONS AND ARE INTENDED ONLY AS AN AID FOR BUILDING DESIGN AND CONSTRUCTION.

FIGURE 11B-25—OBSTRUCTIONS

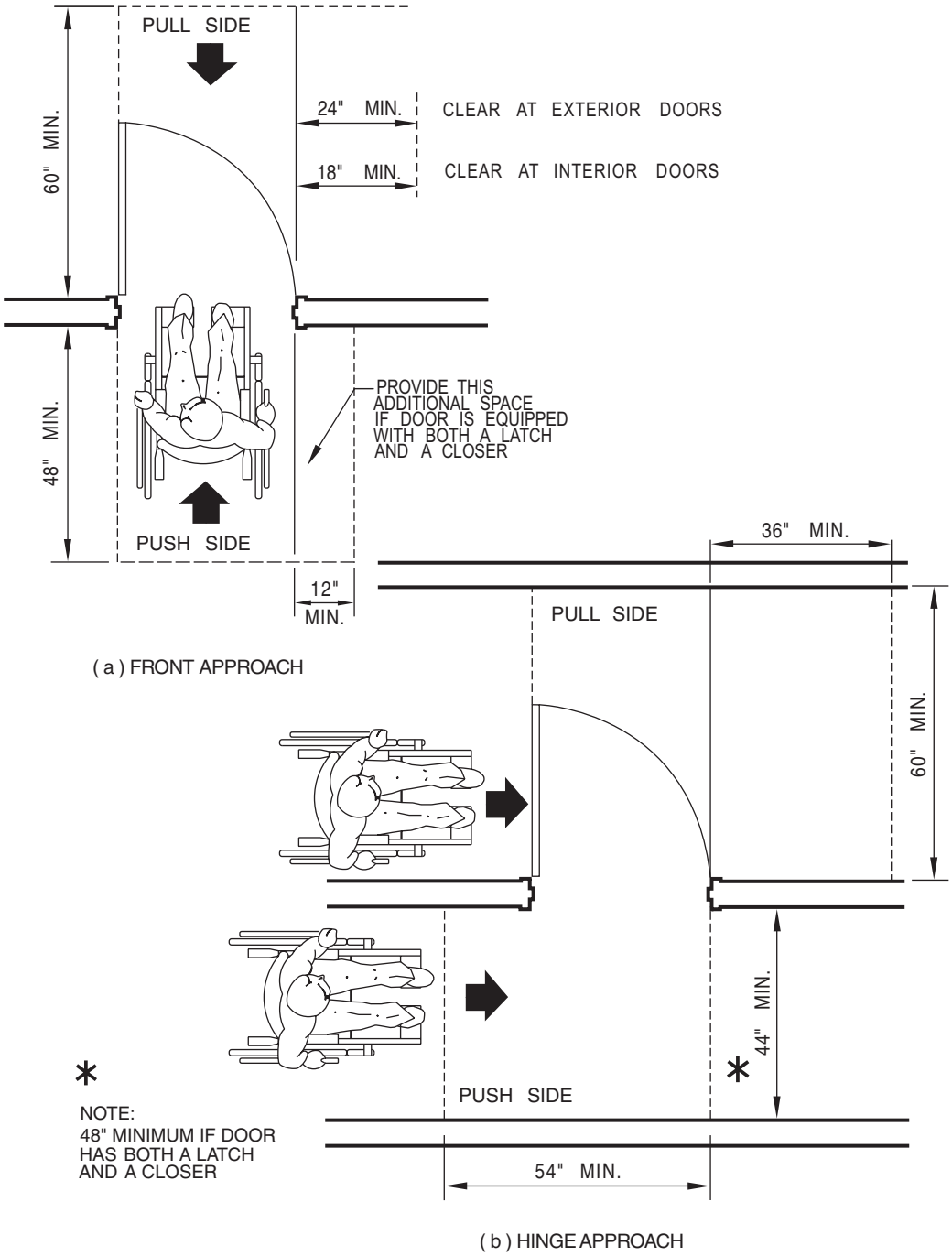

THESE DIAGRAMS ILLUSTRATE THE SPECIFIC REQUIREMENTS OF THESE REGULATIONS AND ARE INTENDED ONLY AS AN AID FOR BUILDING DESIGN AND CONSTRUCTION.

FIGURE 11B-26A—LEVEL MANEUVERING CLEARANCE AT DOORS (Continued)

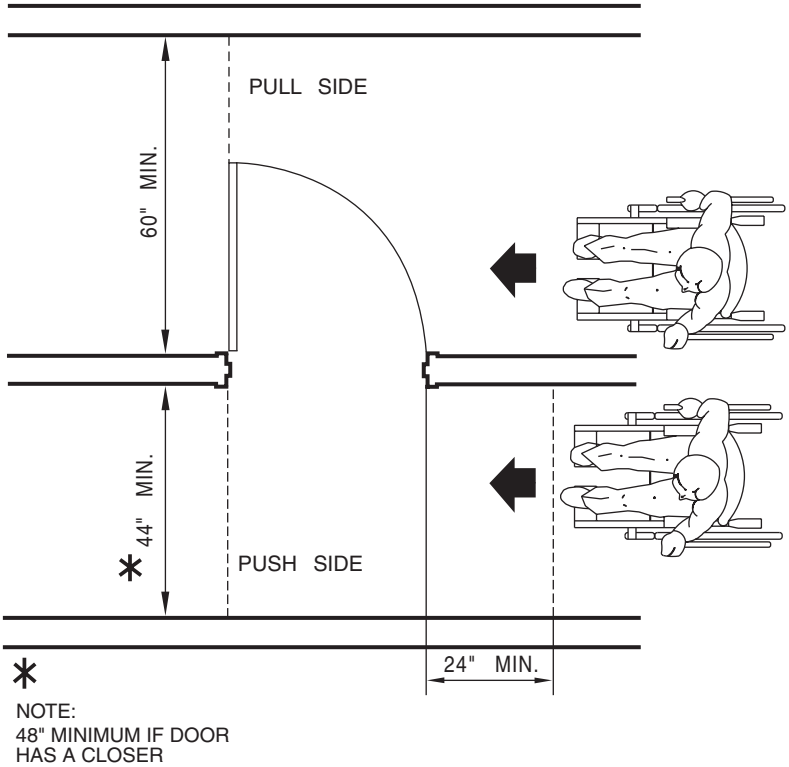

(c) LATCH APPROACH

THIS DIAGRAM ILLUSTRATES THE SPECIFIC REQUIREMENTS OF THESE REGULATIONS AND IS INTENDED ONLY AS AN AID FOR BUILDING DESIGN AND CONSTRUCTION.

FIGURE 11B-26B—LEVEL MANEUVERING CLEARANCE AT DOORS

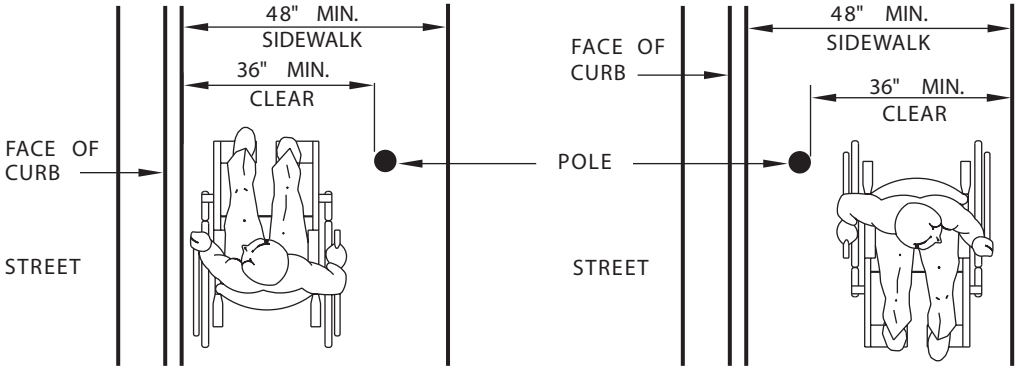

(a) SIDEWALK OBSTRUCTIONS

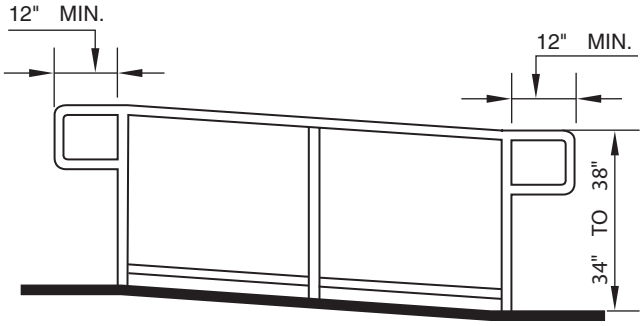

(b) GUIDE RAIL

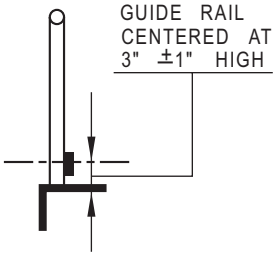

GUIDE RAIL DETAIL

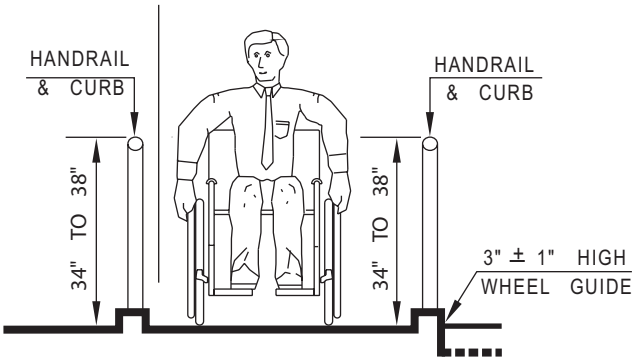

(c) WHEEL GUIDE

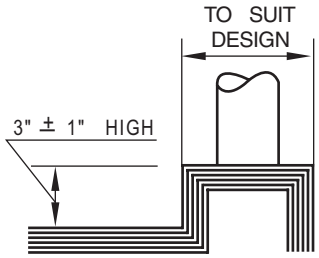

WHEEL GUIDE DETAIL

THESE DIAGRAMS ILLUSTRATE THE SPECIFIC REQUIREMENTS OF THESE REGULATIONS AND ARE INTENDED ONLY AS AN AID FOR BUILDING DESIGN AND CONSTRUCTION.

FIGURE 11B-27—RAMPS AND SIDEWALKS

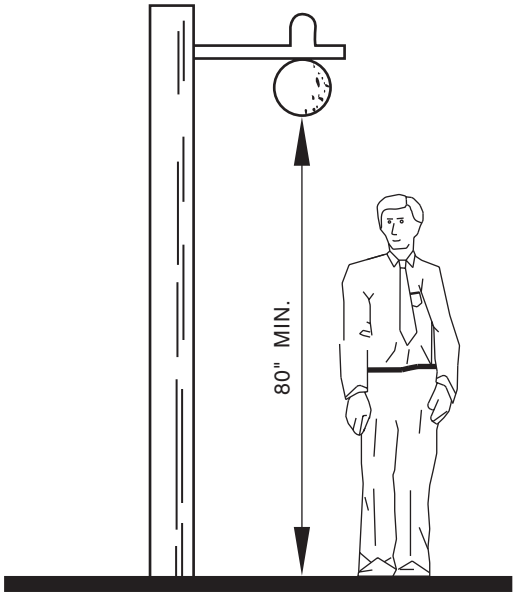

THIS DIAGRAM ILLUSTRATES THE SPECIFIC REQUIREMENTS OF THESE REGULATIONS AND IS INTENDED ONLY AS AN AID FOR BUILDING DESIGN AND CONSTRUCTION.

FIGURE 11B-28—OVERHANGING OBSTRUCTION

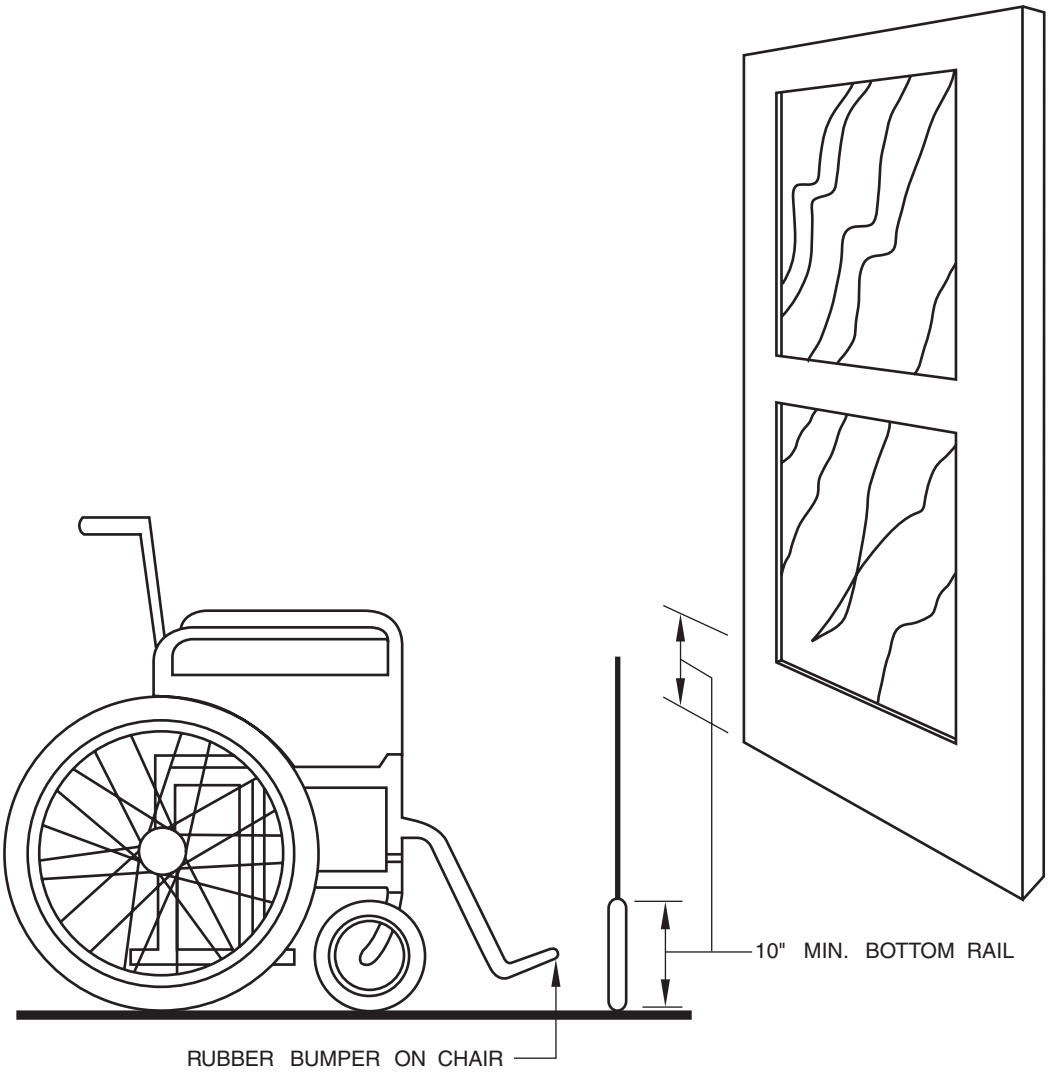

THIS DIAGRAM ILLUSTRATES THE SPECIFIC REQUIREMENTS OF THESE REGULATIONS AND IS INTENDED ONLY AS AN AID FOR BUILDING DESIGN AND CONSTRUCTION.

FIGURE 11B-29—DOOR CONSTRUCTION

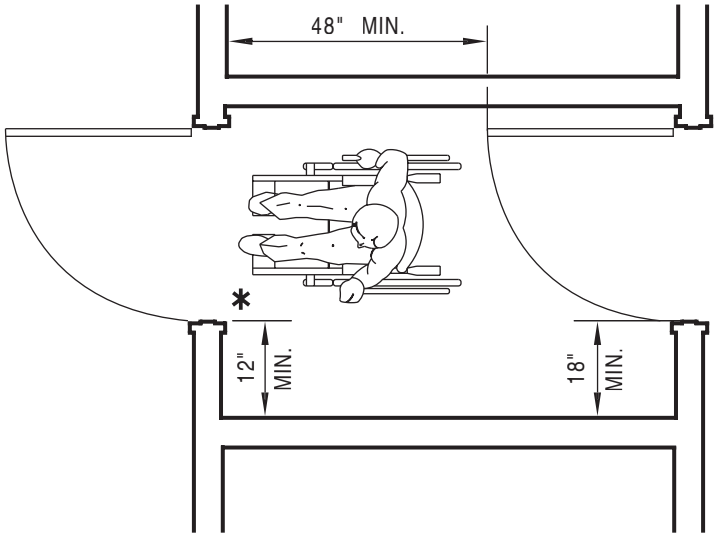

(a) DOOR IN SERIES

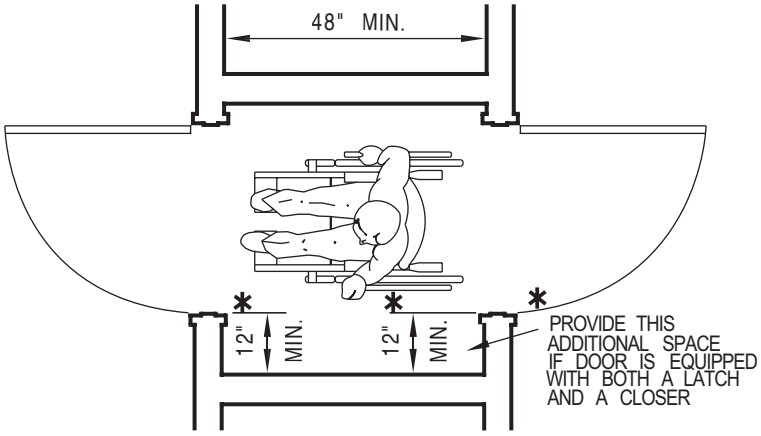

(b) BOTH DOORS OPEN OUT

(SERVING OTHER THAN A REQUIRED EXIT STAIRWAY)

THESE DIAGRAMS ILLUSTRATE THE SPECIFIC REQUIREMENTS OF THESE REGULATIONS AND ARE INTENDED ONLY AS AN AID FOR BUILDING DESIGN AND CONSTRUCTION.

FIGURE 11B-30—VESTIBULE

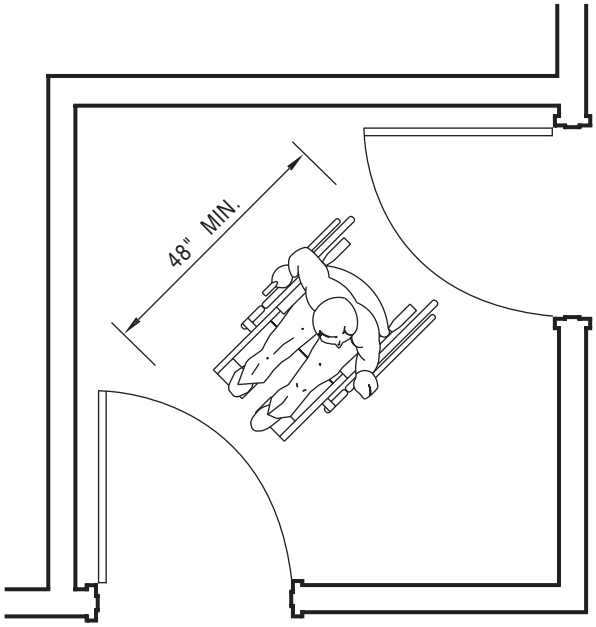

(a) DOORS AT ADJACENT WALLS

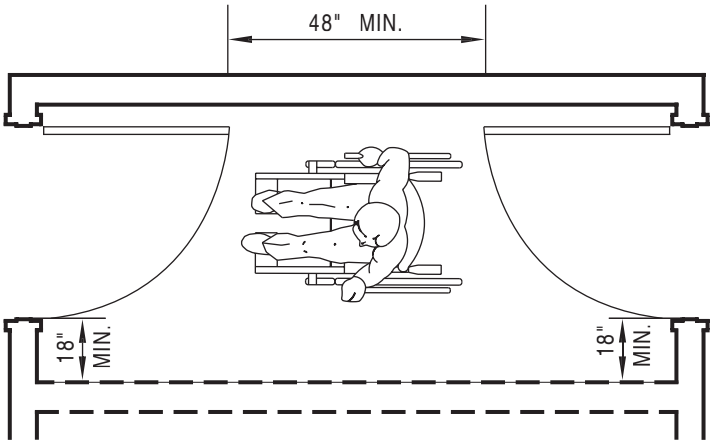

(b) DOORS AT OPPOSITE WALLS

THESE DIAGRAMS ILLUSTRATE THE SPECIFIC REQUIREMENTS OF THESE REGULATIONS AND ARE INTENDED ONLY AS AN AID FOR BUILDING DESIGN AND CONSTRUCTION.

FIGURE 11B-31—VESTIBULE
(SERVING OTHER THAN A REQUIRED EXIT STAIRWAY)

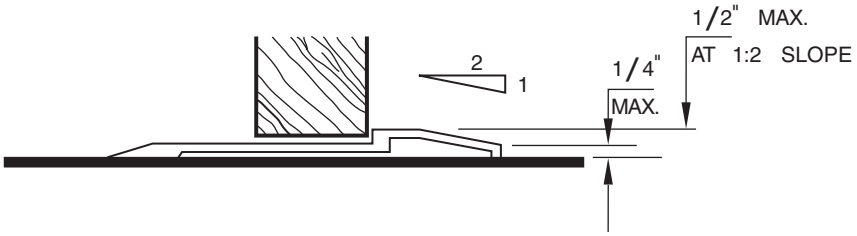

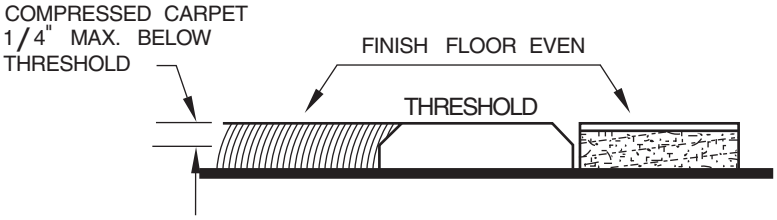

THESE DIAGRAMS ILLUSTRATE THE SPECIFIC REQUIREMENTS OF THESE REGULATIONS AND ARE INTENDED ONLY AS AN AID FOR BUILDING DESIGN AND CONSTRUCTION.

FIGURE 11B-32—THRESHOLDS

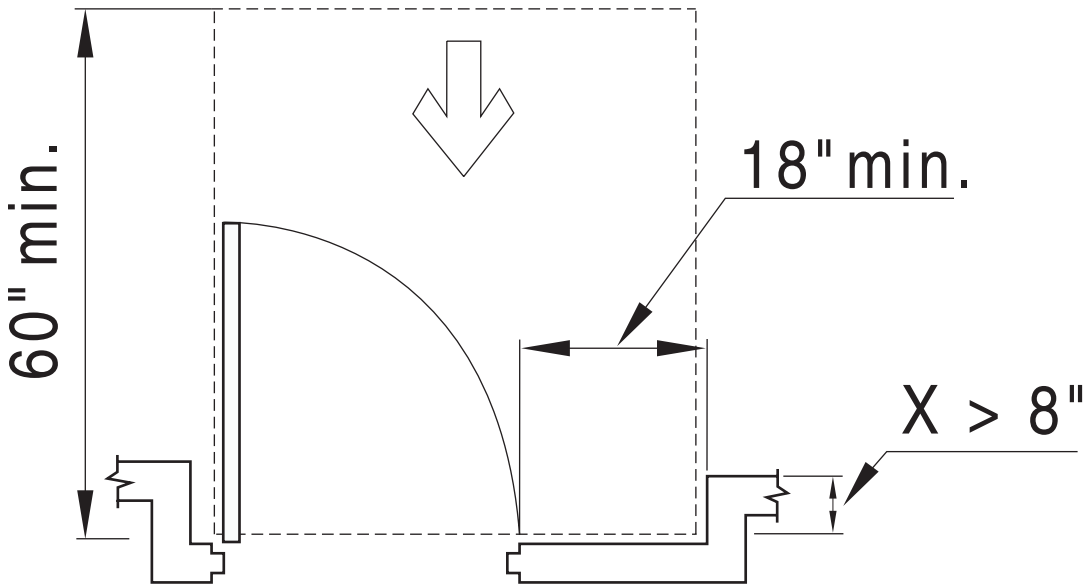

(a) PULL SIDE (INTERIOR DOOR)

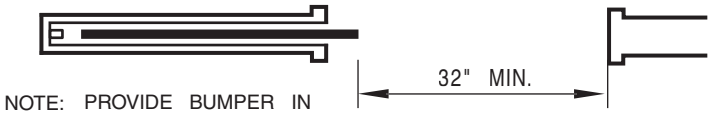

NOTE: PROVIDE BUMPER IN POCKET TO PREVENT DOOR FROM FULLY RECEDING

(b) SLIDING DOOR

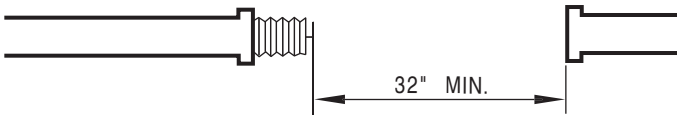

(c) FOLDING DOOR

THESE DIAGRAMS ILLUSTRATE THE SPECIFIC REQUIREMENTS OF THESE REGULATIONS AND ARE INTENDED ONLY AS AN AID FOR BUILDING DESIGN AND CONSTRUCTION.

FIGURE 11B-33—CLEAR DOOR WIDTH AND DEPTH

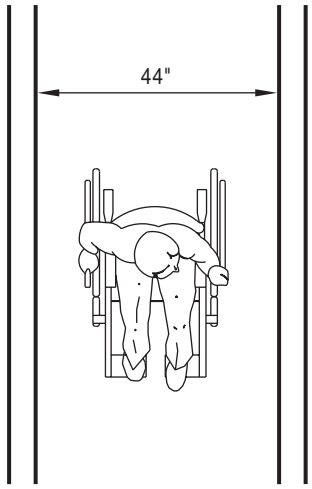

MINIMUM CORRIDOR WIDTH

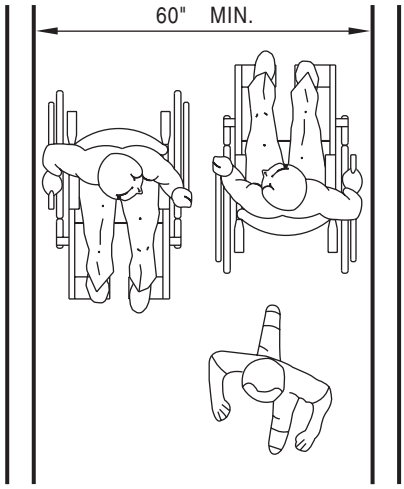

MINIMUM WIDTH FOR
CORRIDORS OVER 200

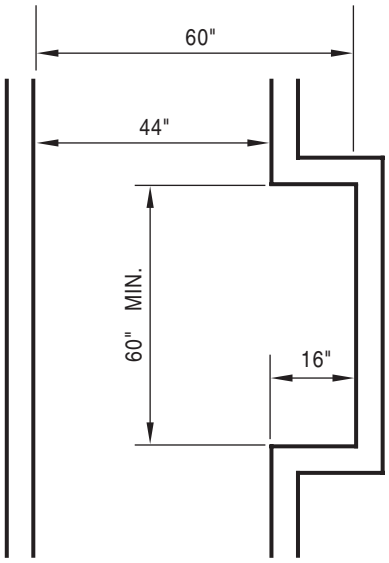

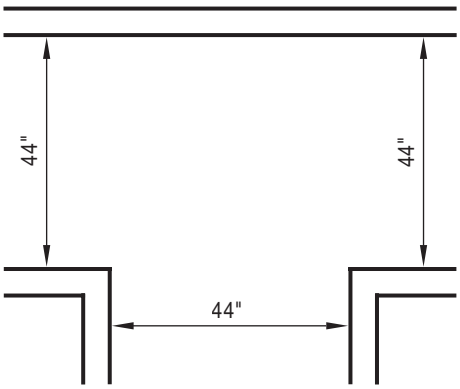

PASSING ALCOVES FOR CORRIDORS OVER
200' IN LIEU OF 60" MIN. WIDTH

THESE DIAGRAMS ILLUSTRATE THE SPECIFIC REQUIREMENTS OF THESE REGULATIONS AND ARE INTENDED ONLY AS AN AID FOR BUILDING DESIGN AND CONSTRUCTION.

FIGURE 11B-34—CORRIDOR OVER 200 FEET (60 960 mm)

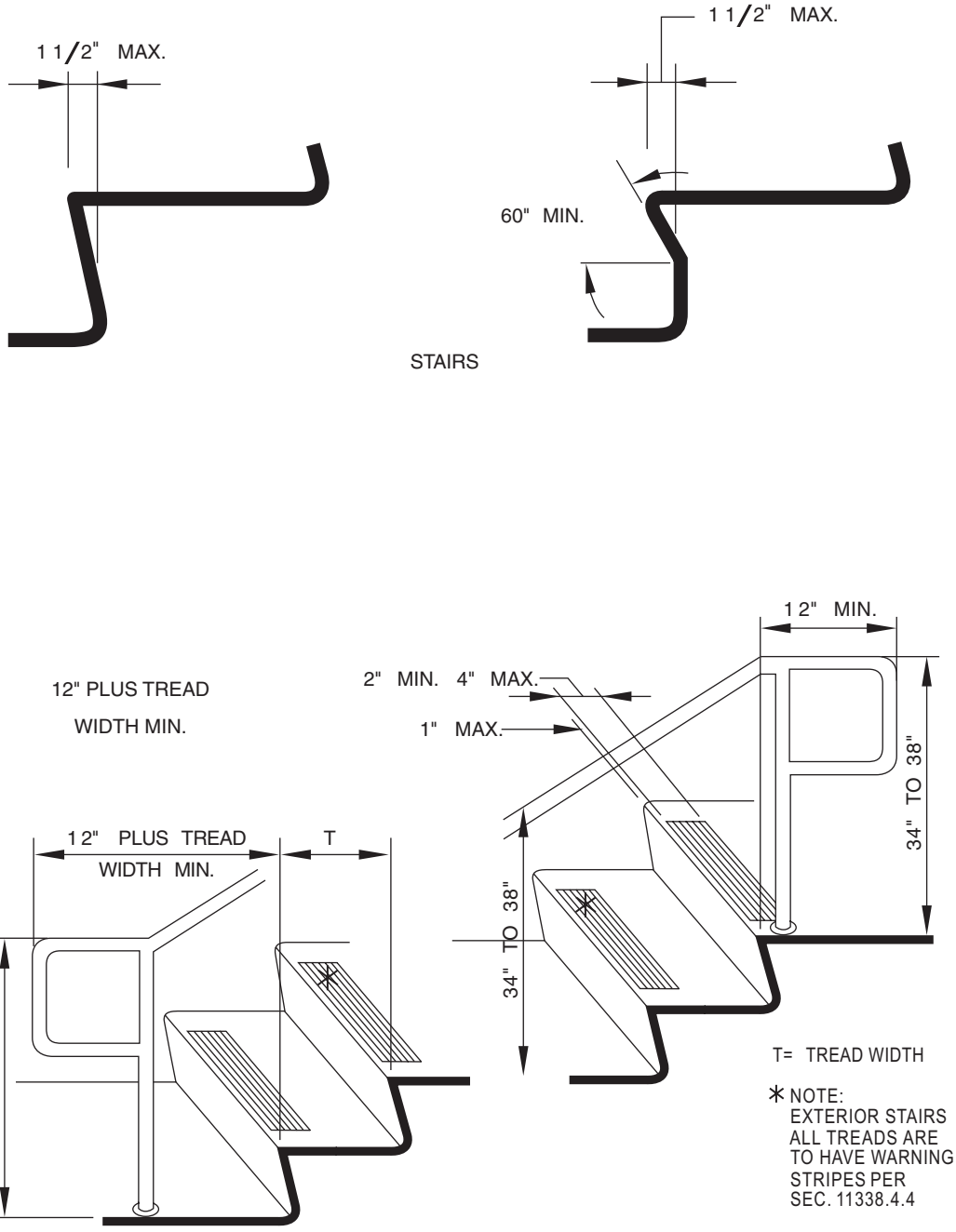

THESE DIAGRAMS ILLUSTRATE THE SPECIFIC REQUIREMENTS OF THESE REGULATIONS AND ARE INTENDED ONLY AS AN AID FOR BUILDING DESIGN AND CONSTRUCTION.

FIGURE 11B-35—WARNING STRIPING AND HANDRAIL EXTENSIONS

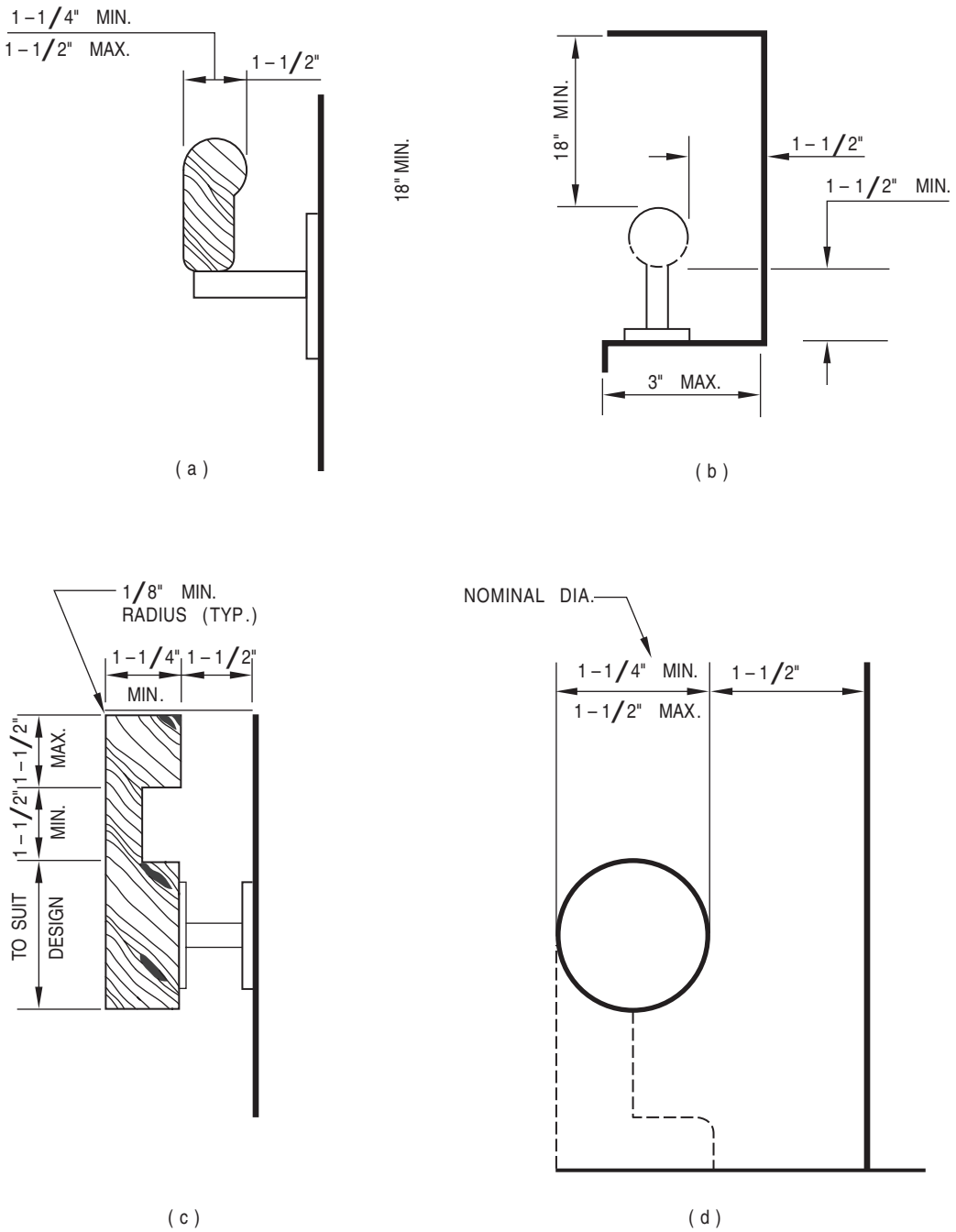

THESE DIAGRAMS ILLUSTRATE THE SPECIFIC REQUIREMENTS OF THESE REGULATIONS AND ARE INTENDED ONLY AS AN AID FOR BUILDING DESIGN AND CONSTRUCTION.

FIGURE 11B-36—STAIR HANDRAILS

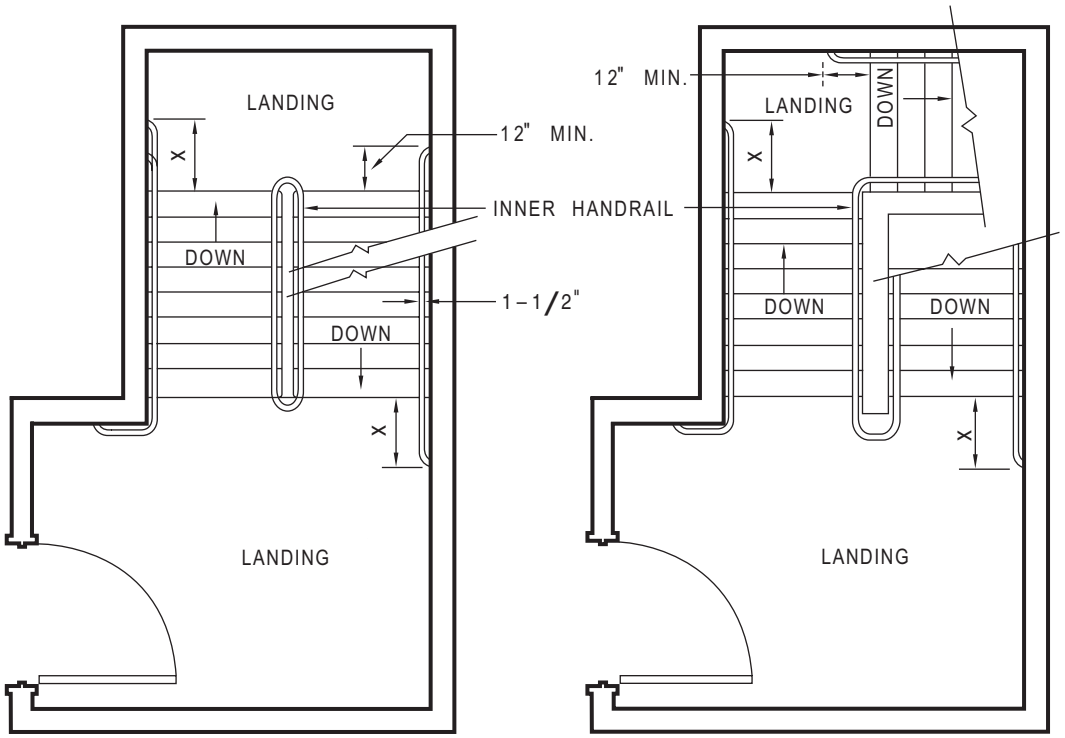

NOTE : INNER HANDRAIL AT LANDINGS OF STAIRS THAT DOUBLE BACK OR IMMEDIATELY TURN SHALL BE CONTINUOUS AND SHALL NOT EXTEND INTO LANDING OR PATH OF TRAVEL.

X : EXTENSION OF HANDRAIL SHALL BE EQUAL TO THE TREAD WIDTH PLUS 12 INCHES.

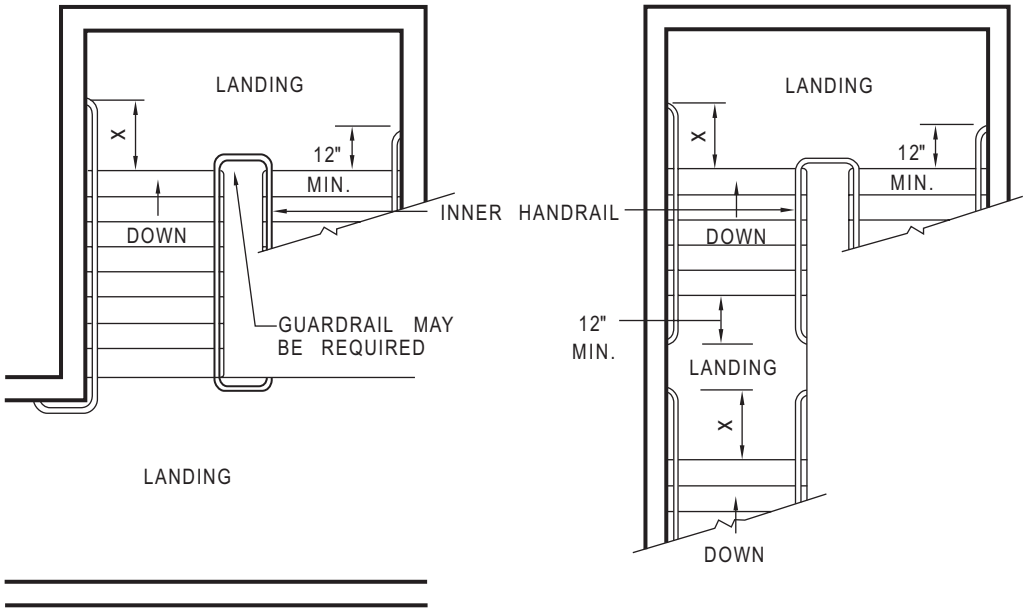

THESE DIAGRAMS ILLUSTRATE THE SPECIFIC REQUIREMENTS OF THESE REGULATIONS AND ARE INTENDED ONLY AS AN AID FOR BUILDING DESIGN AND CONSTRUCTION.

FIGURE 11B-37—STAIR HANDRAILS

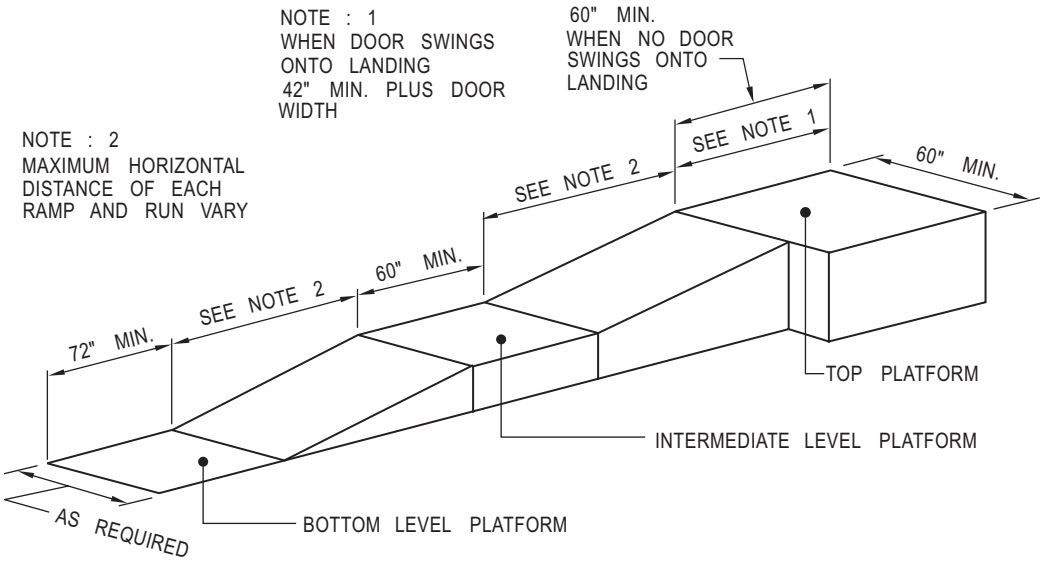

(a) STRAIGHT RAMP RUN

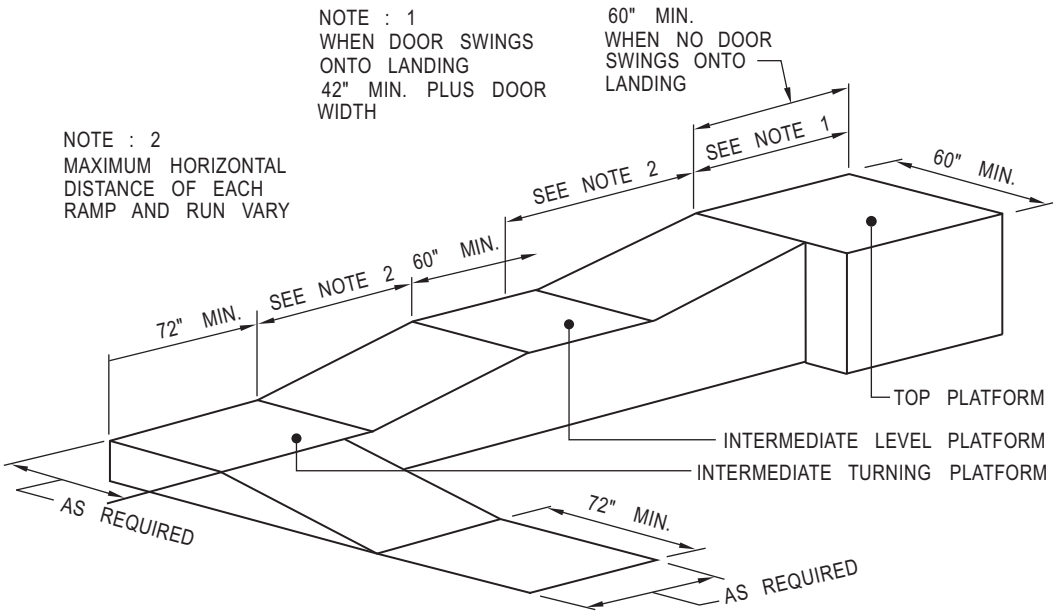

(b) RAMP WITH TURNING PLATFORM

THESE DIAGRAMS ILLUSTRATE THE SPECIFIC REQUIREMENTS OF THESE REGULATIONS AND ARE INTENDED ONLY AS AN AID FOR BUILDING DESIGN AND CONSTRUCTION.

FIGURE 11B-38—RAMP DIMENSIONS

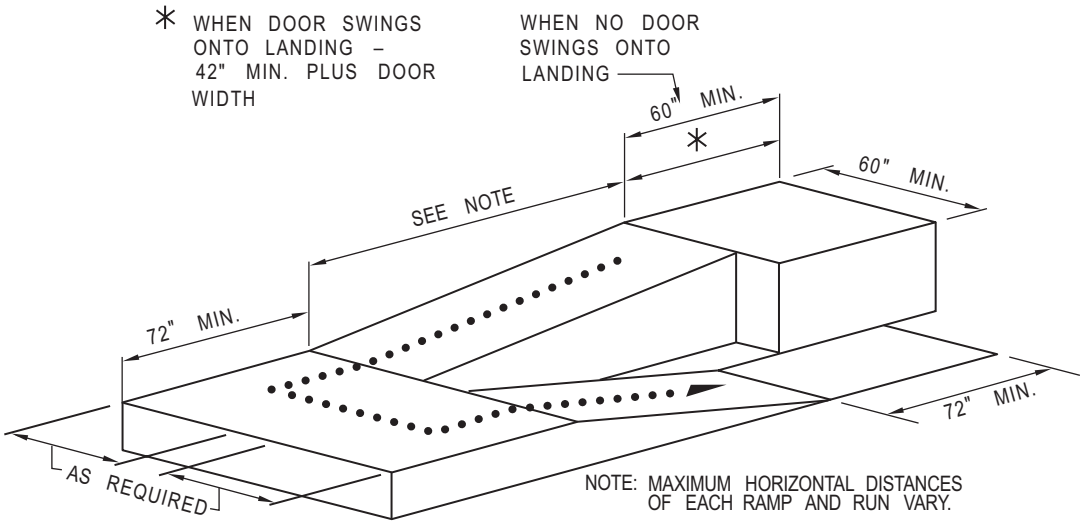

(a) RAMP WITH INTERMEDIATE SWITCH BACK PLATFORM

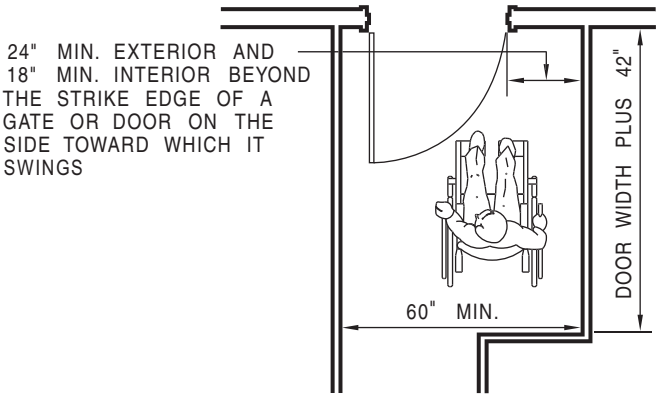

(b) RAMP LANDING AT DOORWAY

THESE DIAGRAMS ILLUSTRATE THE SPECIFIC REQUIREMENTS OF THESE REGULATIONS AND ARE INTENDED ONLY AS AN AID FOR BUILDING DESIGN AND CONSTRUCTION.

FIGURE 11B-39—RAMP LANDING AND DOORWAY

Cleaner Air

FIGURE 11B-40-CLEANER AIR SYMBOL

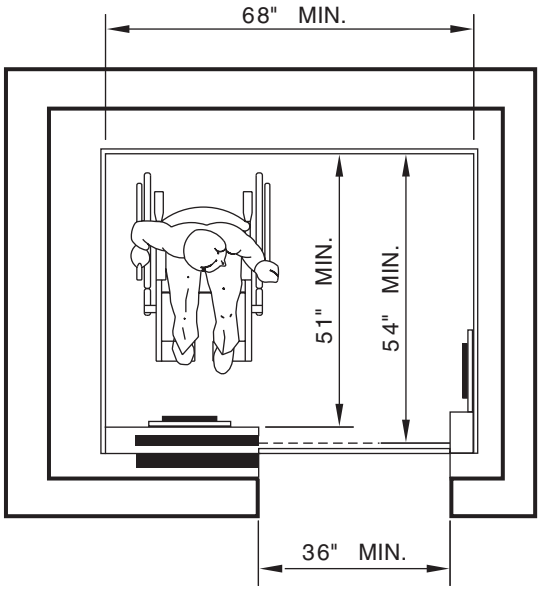

(a) SIDE OPENING DOOR

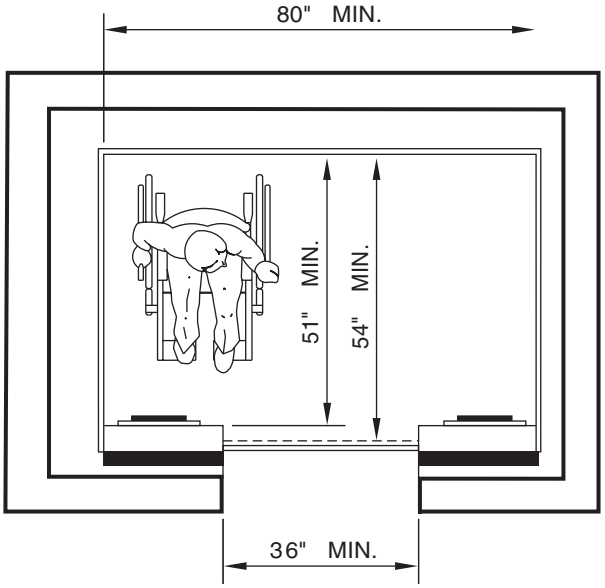

(b) CENTER OPENING DOOR

THIS DIAGRAM ILLUSTRATES THE SPECIFIC REQUIREMENTS OF THESE REGULATIONS AND IS INTENDED ONLY AS AN AID FOR BUILDING DESIGN AND CONSTRUCTION.

***FIGURE 11B-40A—MINIMUM DIMENSIONS OF ELEVATOR CARS**

* These figures should also be in Chapter 11B. They were erroneously left out. This will be corrected in Rulemaking.

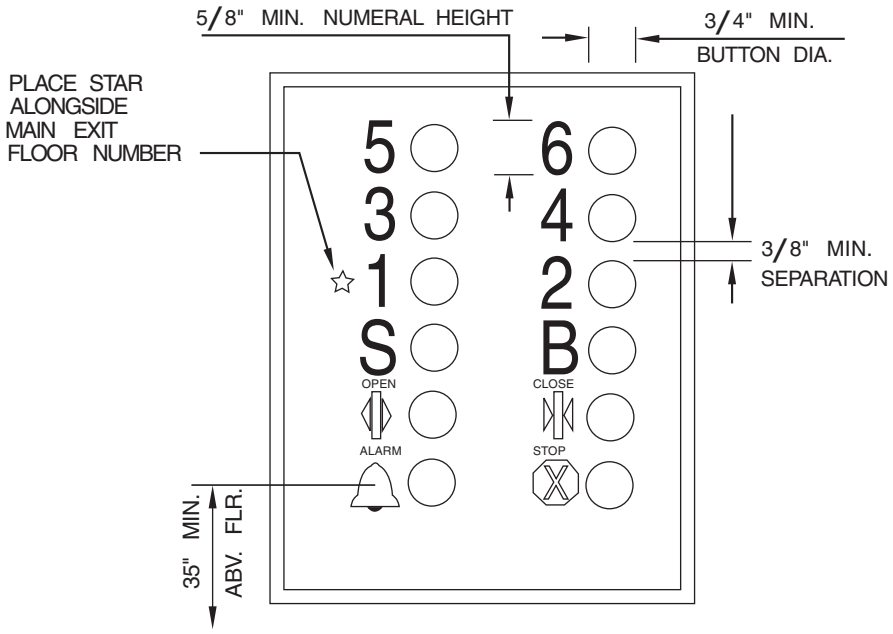

(a) ELEVATOR CONTROL PANEL DETAIL

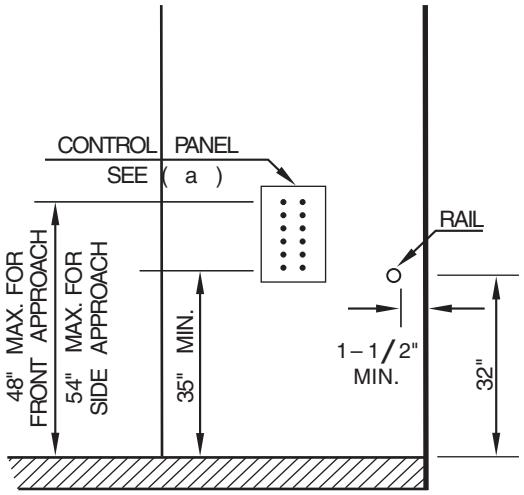

(b) MAXIMUM INSTALLATION HEIGHTS ABOVE CAB FLOOR

THIS DIAGRAM ILLUSTRATES THE SPECIFIC REQUIREMENTS OF THESE REGULATIONS AND IS INTENDED ONLY AS AN AID FOR BUILDING DESIGN AND CONSTRUCTION.

***FIGURE 11B-40B—ELEVATOR CONTROL PANEL**

* These figures should also be in Chapter 11B. They were erroneously left out. This will be corrected in Rulemaking.

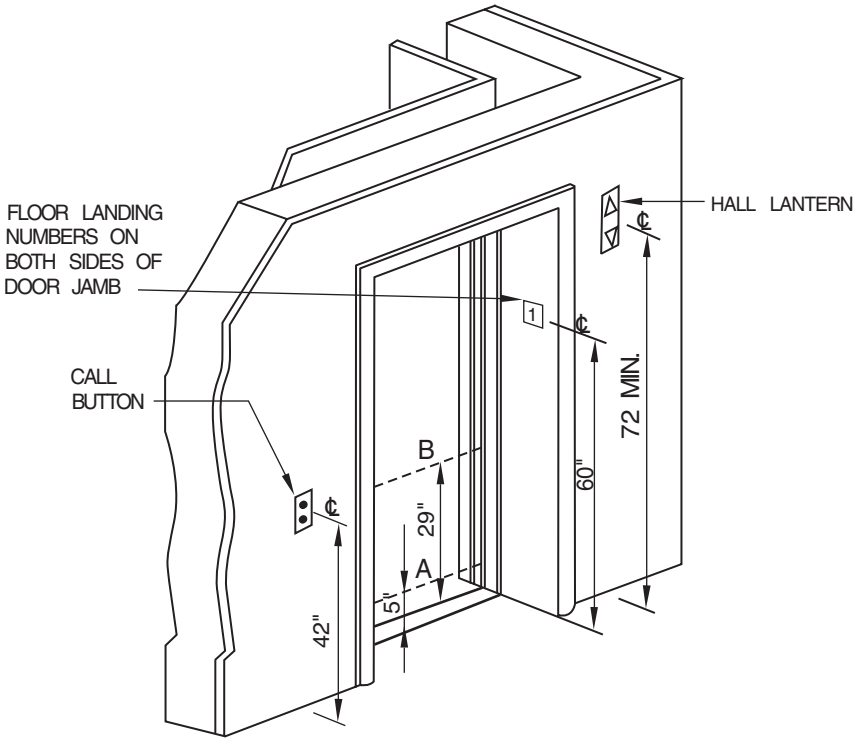

NOTE:
THE AUTOMATIC DOOR REOPENING DEVICE IS ACTIVATED IF AN OBJECT PASSES THROUGH EITHER LINE A OR LINE B. LINE A AND LINE B REPRESENT THE VERTICAL LOCATION OF THE DOOR REOPENING DEVICE NOT REQUIRING CONTACT.

***FIGURE 11B-40C—HOISTWAY AND ELEVATOR ENTRANCES**

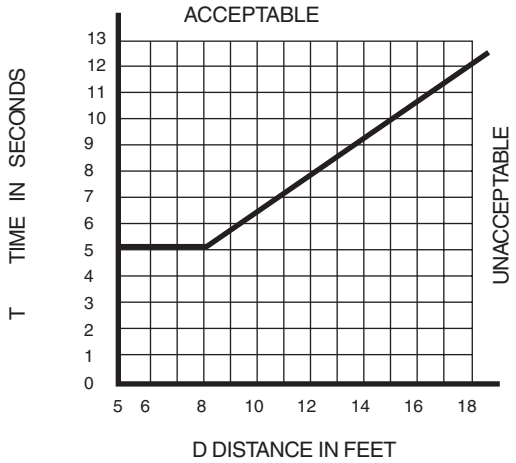

THIS DIAGRAM ILLUSTRATES THE SPECIFIC REQUIREMENTS OF THESE REGULATIONS AND IS INTENDED ONLY AS AN AID FOR BUILDING DESIGN AND CONSTRUCTION.

***FIGURE 11B-40D—GRAPH OF TIMING EQUATION**

* These figures should also be in Chapter 11B. They were erroneously left out. This will be corrected in Rulemaking.

Chapter 11C [For DSA/AC]
STANDARDS FOR CARD READERS AT GASOLINE FUEL DISPENSING FACILITIES

SECTION 1101C – CARD–READER DEVICES AT FUEL DISPENSING EQUIPMENT

1101C.1 General. *Notwithstanding other requirements in the California Building Code (CBC), only the requirements and additional definitions in this section shall apply to card–reading devices in motor vehicle fuel facilities, except that administrative requirements which are found in Chapter 1 still apply.*

For purposes of this section, the following additional definitions shall apply:

ACCESSIBLE*. See 11A, Section 1102A.1-A and Chapter 11B, Section 1102B.*

ACCESSIBLE ELEMENT*. See Chapter 2, Section 202-A.*

ALTERNATE CARD READER *shall be defined in this section as functionally equal card reader and control directly attached to or an integral part of the fuel dispenser in addition to the primary card reader which is in integral part of the dispenser.*

FREE–STANDING PEDESTAL *is a card–reading device which controls one or more remote fuel dispensers that have no card reader as an integral part of the fuel dispenser.*

GRADE*. See Chapter 2, Section 208-G.*

INTERNATIONAL SYMBOL OF ACCESSIBILITY*. See Chapter 11A, Section1102A.9-I and Chapter 11B, Section 1102B.*

LEVEL ACCESSIBLE AREA, *for the purposes of this section, shall mean a slope of not more than 2 percent in front of the dispensing device; however, the slope may extend to 5 percent where the enforcing authority determines that, due to unusual site conditions, the 2 percent gradient is not obtainable.*

LEVEL AREA *See Chapter 11A, Section 1102A.12-L and Chapter 11B, Section 1102B.*

PATH OF TRAVEL *shall include the clearance requirements stated in Chapter 11B for Wheelchair Passage Width, and Relationship of Maneuvering Clearances to Wheelchair Spaces, except that pump nozzles and hoses may overlap required clearances.*

RECOMMEND *See Chapter 2, Section 219-R.*

TYPE OF MOTOR FUEL *shall mean gasoline, diesel, compressed natural gas, methanol, electricity or ethanol.*

SECTION 1102C – APPLICATION

This section shall apply to equipment located at the following facilities:

1. *New motor vehicle fuel facilities.*

2. *Existing motor vehicle fuel facilities built before the effective date of this section when:*

2.1 *Remodeling or reconstruction includes removal and replacement of one or more islands and associated piping and tank(s); or*

2.2 *Remodeling includes reconstruction or removal and replacement of fuel islands at facilities that provide free–standing pedestal card readers.*

SECTION 1103C – NUMBER OF ACCESSIBLE CARD–READING DEVICES REQUIRED

Where only one card–reading device is installed for use with any type of motor fuel, it shall meet the required features of this section. When more than one card–reading location is available for a specific type of motor fuel, a minimum of two for that type shall have the accessible features of this section.

SECTION 1104C – REQUIRED FEATURES

Card–reading devices at motor vehicle fuel facilities shall be accessible by complying with only the following:

1. *The highest operable part of each primary or alternate card reader shall be no more than 54 inches (1372 mm) measured from the base of the fuel dispenser. Where card readers are located on free–standing pedestals, the card–reading control function shall be no more than 54 inches (1372 mm) above an accessible level area which is served by an accessible path of travel.*

EXCEPTION: *If an enforcing agency requires that fuel dispensers or card–reading devices be placed in a manner where the card–reading device exceeds the requirements described herein, the provisions of Section 1104C do not apply. Any enforcing agency having jurisdiction over retail fueling facilities may not require islands or impose other regulations which conflict with this section, unless the agency documents and justifies the specific necessity for such a rule or ordinance and complies with the requirements of Health and Safety Code Section 18941.*

2. *An accessible path of travel shall be provided to the base of all fuel dispensers required to meet the provisions of this section. Such fuel dispensers shall be mounted on the accessible level area.*

3. *An accessible level area shall be provided which is minimally 30 inches by 48 inches (762 mm by 1219 mm) level and clear. This area shall be provided within 10 inches (254 mm) in plan view of the face of the controls and shall be unobstructed by any features, except pump nozzles and hoses, with the long side of this space parallel to and centered [plus or minus 9 inches (229 mm)] with the face of the card–reader controls. (See Figures 11C–1 and 11C–2.)*

SECTION 1105C – Protection of dispensers mounted at grade

Dispensers mounted at grade shall be protected from vehicular damage as required by Section 5201.5.1, Part 9, Title 24 (California Fire Code).

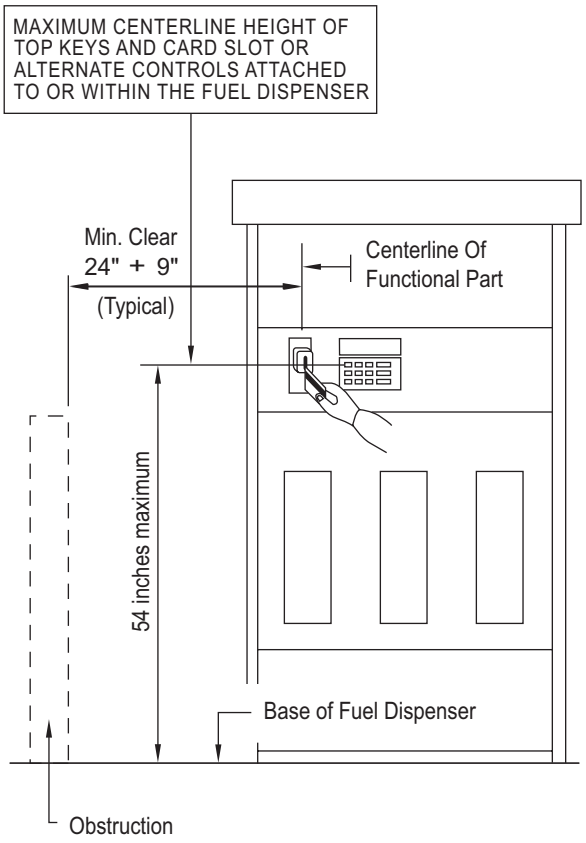

FIGURE 11C-1—CARD READERS MOUNTED IN FUEL DISPENSERS

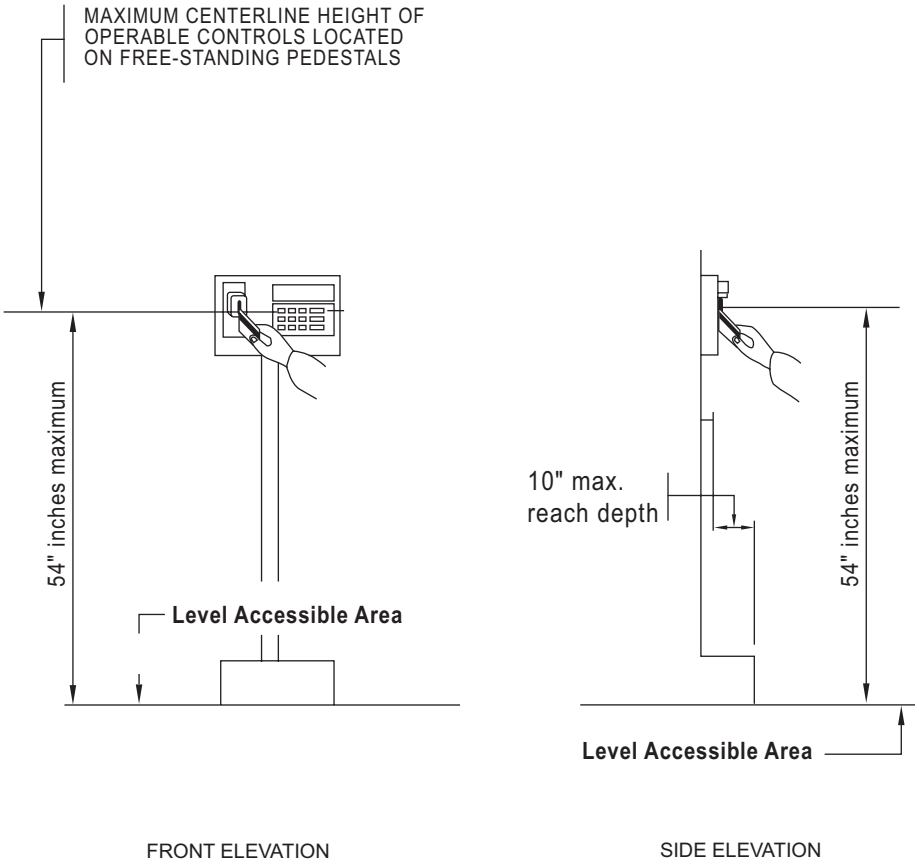

FIGURE 11C-2—CARD READERS LOCATED ON FREE-STANDING PEDESTALS

Chapter 24
[For DSA/AC] GLASS AND GLAZING

[For DSA/AC] NOTE: *Chapter 24 is adopted by reference in Table 1109A.2-1 and 1109A.2-2. The codes, standards and publications adopted and set forth in adopting Chapter 24, including other codes, standards and publication referred to therein are, by title and date of publication, hereby adopted as standard reference documents of this code. See Section 101.7.*

Chapter 29
PLUMBING SYSTEMS

NOTE: *This chapter is not adopted by DSA/AC, see Chapter 11B, Section 1115B.2.*

Chapter 30
ELEVATORS, DUMBWAITERS, ESCALATORS AND MOVING WALKS

SECTION 3001 – SCOPE

The provisions of this chapter shall apply to the design, construction, installation, operation, alteration and repair of elevators, dumbwaiters, escalators and moving walks and their hoistways.

> ***[For DSA/AC] EXCEPTION:*** *For accessibility requirements for special access lifts, see California Code of Regulations, Title 24, Part 7, Article 7-15, Sections 7-3093 through 7-3094.5 and Part 2, Sections 1110A and 1116B.*

3001.1 [For DSA/AC & HCD 1 and HCD 1/AC] Referenced Standards. *For elevators and special access lifts in covered multi-family dwellings see Chapter 11A, Section 1110A. For accessibility requirements for elevators and special access (wheelchair) lifts in public accommodations, commercial buildings, and publicly funded, owned or leased housing, see Chapter 11B, Section 1116B.*

SECTION 3003 – SPECIAL PROVISIONS

3003.4 Size of Cab and Control Locations.

3003.4.1 General. In buildings three or more stories in height served by an elevator or a building served by an elevator required by Chapter 11, at least one elevator serving all floors shall accommodate a wheelchair, in accordance with this section.

> ***[For DSA/AC] EXCEPTION:*** *For accessibility requirements for size of cab and control locations in accessible housing, see Chapter 11A, Section 1110A.1.2 and for public buildings, public accommodations, commercial buildings, and publicly funded housing, see Chapter 11B, Section 1116B.1.1.*

3003.4.2 Operation and leveling. The elevator shall be automatic and be provided with a self-leveling feature that will automatically bring the car to the floor landings within a tolerance of plus or minus 1/2 inch (12.7 mm) under normal loading and unloading conditions. This self-leveling shall, within its zone, be entirely automatic and independent of the operating device and

shall correct the overtravel or undertravel. The car shall also be maintained approximately level with the landing, irrespective of load.

> ***[For DSA/AC] EXCEPTION:*** *For accessibility requirements for operation and leveling in accessible housing, see Chapter 11A, Section 1110A.1.3. For public buildings, public accommodations, commercial buildings and publicly funded housing, see Chapter 11B, Section 1116B.1.2.*

3003.4.4 Door size. Minimum clear width for elevator doors shall be 36 inches (914 mm).

> **EXCEPTIONS:**
> **1.** When approved by the building official, the minimum door width may be reduced to 32 inches (813 mm) for a car with dimensions as permitted by the exception to Section 3003.4.7.
>
> ***2. [For DSA/AC]*** *For accessibility requirements for door size in public buildings, public accommodations, commercial buildings and publicly funded housing, see Chapter 11B, Section 1116B.1.4.*

3003.4.5 Door protective and reopening device. Doors closed by automatic means shall be provided with a door-reopening device that will function to stop and reopen a car door and adjacent hoistway door in case the car door is obstructed while closing. This reopening device shall also be capable of sensing an object or person in the path of a closing door without requiring contact for activation at a nominal 5 inches and 29 inches (127 mm and 737 mm) above the floor.

Door-reopening devices shall remain effective for a period of not less than 20 seconds.

*[For DSA/AC] **EXCEPTION:** For accessibility requirements for door protective and reopening device in accessible housing, see Chapter 11A, Section 1114A.1. For public buildings, public accommodations, commercial buildings, and publicly funded housing, se Chapter 11B, Section 1116B.1.5.*

3003.4.6 Door delay (passenger service time).

3003.4.6.1 Hall call. The minimum acceptable time from notification that a car is answering a call (lantern and audible signal) until the doors of that car start to close shall be as indicated in the following table:

DISTANCE, feet (mm)	TIME (seconds)
0 to 5 (0 to 1524)	4
10 (3048)	7
15 (4572)	10
20 (6096)	13

The distance shall be established from a point in the center of the corridor or lobby [maximum 5 feet (1524 mm)] directly opposite the farthest hall button to the center line of the hoistway entrance.

*[For DSA/AC] **EXCEPTION:** For accessibility for hall call in accessible housing, see Chapter 11A, Section 1110A.1.5. For public buildings, public accommodations, commercial buildings and publicly funded housing, see Chapter 11B, Section 1116B.1.6.*

3003.4.6.2 Car call. The minimum acceptable time for doors to remain fully open shall not be less than three seconds.

*[For DSA/AC] **EXCEPTION:** For accessibility requirements for car call in accessible housing, see Chapter 11A,Section 1110A.1.6. For public buildings, public accommodations, commercial buildings and publicly funded housing, see Chapter 11B, Section 1116B.1.7.*

3003.4.7 Car inside. The car inside shall allow for the turning of a wheelchair. The minimum clear distance between walls or between wall and door, excluding return panels, shall not be less than 68 inches by 54 inches (1727 mm by 1372 mm). Minimum distance from wall to return panel shall not be less than 51 inches (1295 mm).

EXCEPTION: When approved by the building official, elevators provided in schools, institutions or other buildings may have a minimum clear distance between walls or between wall and door, excluding return panels, of not less than 54 inches by 54 inches (1372mmby 1372 mm).Minimum distance from wall to return panel shall not be less than 51 inches (1295 mm).

*[For DSA/AC] **EXCEPTION:** For accessibility requirements for car inside in public buildings, public accommodations, commercial buildings and publicly funded housing, see Chapter 11B, Section 1116B.1.8.*

3003.4.8 Car controls. Controls shall be readily accessible from a wheelchair upon entering an elevator.

The center line of the alarm button and emergency stop switch shall be at a nominal 35 inches (889 mm), and the highest floor button no higher than 54 inches (1372 mm) from the floor. Floor registration buttons, exclusive of border, shall be a minimum 3/4 inch (19.1mm) in size, raised, flush or recessed. Visual indication shall be provided to show each call registered and extinguished when call is answered. Depth of flush or recessed buttons when operated shall not exceed 3/8 inch (9.5 mm).

Markings shall be adjacent to the controls on a contrasting color background to the left of the controls. Letters or numbers shall be a minimum of 5/8 inch (15.9 mm) high and raised or recessed 0.030 inch (0.8 mm).

Applied plates permanently attached shall be acceptable.

Emergency controls shall be grouped together at the bottom of the control panel.

Controls not essential to the automatic operation of the elevator may be located as convenient.

*[For DSA/AC] **EXCEPTION:** For accessibility requirements for car controls in accessible housing, see Chapter 11A, Section 1110A.1.8. For public buildings, public accommodations, commercial buildings and publicly funded housing, see Chapter 11B, Section 1116B.1.9.*

3003.4.9 Car position indicator and signal. A car position indicator shall be provided above the car operating panel or over the opening of each car to show the position of the car in the hoistway by illumination of the indication corresponding to the landing at which the car is stopped or passing.

Indications shall be on a contrasting color background and a minimum of 1/2 inch (12.7 mm) in height.

In addition, an audible signal shall sound to tell a passenger that the car is stopping or passing a floor served by the elevator.

A special button located with emergency controls may be provided. Operation of the button will activate an audible signal only for the desired trip.

> ***[For DSA/AC] EXCEPTION:*** *For accessibility requirements for car position indicator and signal in public buildings, public accommodations, commercial buildings and publicly funded housing, see Chapter 11B, Section 1116B.1.10.*

3003.4.12 Handrails. A handrail shall be provided on one wall of the car, preferably the rear. The rails shall be smooth and the inside surface at least 11/2 inches (38 mm) clear of the walls at a nominal height of 32 inches (813 mm) from the floor.

Nominal = ± 1 inch (25mm).

> **NOTE:** Thirty-two inches (813 mm) required to reduce interference with car controls where lowest button is centered at 35 inches (889 mm) above floor.
>
> ***[For DSA/AC] EXCEPTION:*** *For accessibility requirements for handrails in public buildings, public accommodations, commercial buildings and publicly funded housing, see Chapter 11B, Section 1116B.1.11.*

3003.4.13 Minimum illumination. The minimum illumination at the car controls and the landing when the car and landing doors are open shall not be less than 5 footcandles (54 lx).

> ***[For DSA/AC] EXCEPTION:*** *For accessibility requirements for minimum illumination at car controls in accessible housing, see Chapter 11A, Section 1110A.1.10. For public buildings, public accommodations, commercial buildings and publicly funded housing, see Chapter 11B, Section 1116B.1.12.*

3003.4.14 Hall buttons. The center line of the hall call buttons shall be a nominal 42 inches (1067 mm) above the floor.

Direction buttons, exclusive of border, shall be a minimum of 3/4 inch (19.1 mm) in size, raised, flush or recessed. Visual indication shall be provided to show each call registered and extinguished when the call is answered. Depth of flush or recessed button when operated shall not exceed 3/8 inch (9.5 mm).

> ***[For DSA/AC] EXCEPTION:*** *For accessibility requirements for hall call button center line in public buildings, public accommodations, commercial buildings and publicly funded housing, see Chapter11B, Section 1116B.1.13.*

3003.4.15 Hall lantern. A visual and audible signal shall be provided at each hoistway entrance indicating to the prospective passenger the car answering the call and its direction of travel.

The visual signal for each direction shall be a minimum of 21/2 inches (64 mm) in size and visible from the proximity of the hall call button.

The audible signal shall sound once for the up direction and twice for the down direction.

The center line of the fixture shall be located a minimum of 6 feet (1829 mm) from the floor.

The use of in-car lanterns conforming to the above and located in jamb shall be acceptable.

> ***[For DSA/AC] EXCEPTION:*** *For accessibility requirements for hall lantern in accessible housing, see Chapter 11A, Section 1110A.1.11. For public buildings, public accommodations, commercial buildings and publicly funded housing, see Chapter 11B, Section 1116B.1.14.*

3003.4.16 Doorjamb marking. The floor designation shall be provided at each hoistway entrance on both sides of jamb visible from within the car and the elevator lobby at a height of 60 inches (1524 mm) above the floor. Designations shall be on a contrasting background 2 inches (51 mm) high and raised 0.030 inch (0.8 mm).

Applied plates permanently attached shall be acceptable.

> ***[For DSA/AC] EXCEPTION:*** *For accessibility requirements for doorjamb marking in accessible housing, see Chapter 11A, Section 1110A.1.12. For public buildings, public accommodations, commercial buildings and publicly funded housing, see Chapter 11B, Section 1116B.1.15.*

3003.4.17 Location.

> ***[For DSA/AC] EXCEPTION:*** *For accessibility requirements for location of passenger elevators in accessible housing, see Chapter 11A, Section 1110A.1.13. For public buildings, public accommodations, commercial buildings and publicly funded housing, see Chapter 11B, Section 1116B.1.16.*

Chapter 31B [For DHS]
PUBLIC SWIMMING POOLS

SECTION 3113B – POOL DECKS

3113B.1 General. *A minimum continuous and unobstructed 4-foot-wide (1219 mm) slip-resistant nonabrasive deck area of concrete or like material shall be provided flush with the top of the pool shell wall extending completely around the pool and the deck area shall further extend 4 feet (1219 mm) on both sides and rear of any diving board or slide and their appurtenances. The deck width shall be measured from the poolside edge of the coping lip.*

EXCEPTIONS:

1. *A deck at least 4 feet (1219 mm) in width shall extend around 50 percent or more of the perimeter of a spa pool. For spa pools that have their walls extending above the ground or floor level, the deck area requirement shall apply at the ground or floor level unless otherwise specified by the enforcing agency.*

2. *The deck width separating a spa pool from an adjacent pool shall not be less than 6 feet (1829 mm) wide.*

3. *The deck may be omitted from around a temporary training pool.*

4. [For DSA/AC] *Any mechanism provided to assist persons with disabilities in gaining entry into the pool and in exiting from the pool. All mechanisms shall comply with 1104B.4.3. Refer to Section 1104B.4.3, Participation areas.*

Chapter 34
EXISTING STRUCTURES

Division I

SECTION 3401 – GENERAL

Buildings in existence at the time of the adoption of this code may have their existing use or occupancy continued, if such use or occupancy was legal at the time of the adoption of this code, provided such continued use is not dangerous to life.

Any change in the use or occupancy of any existing building or structure shall comply with the provisions of Sections 109 and 3405 of this code.

For existing buildings, see Appendix Chapter 34. See also Section 101.3.

For a comprehensive code and guidelines on the treatment of existing buildings, see the *Uniform Code for Building Conservation.*

[For DSA/AC] NOTE: *For accessibility requirements see Chapter 11B, Section 1134B.*

Division II – [For DSA/AC] STATE HISTORICAL BUILDING CODE

Note: *Division II is a reprint of Part 8, California Historical Building Code.*

Part 8 contains alternative regulations for qualified historical buildings.

The State Historical Building Code (SHBC) is unique among state regulations. The authoring of the original SHBC required state agencies promulgating regulations for building construction to work in harmony with representatives of other design and construction disciplines. The result was a totally new approach to building codes for historical structures, which maintains currently acceptable life-safety standards.

These regulations are also unique in that they are performance-oriented rather than prescriptive. The provisions of the SHBC are to be applied by the enforcing authority of every city, county, city and county, or state agency in permitting repairs, alterations and additions necessary for the preservation, rehabilitation, relocation, related construction, change of use or continued use of a qualified historical building.

The authority for use of the SHBC is vested in Sections 18950 through 18961 of the Health and Safety Code. Section 18954 states, .The building department of every city or county shall apply the provisions of alternative building standards and building regulations adopted by the SHBC Board pursuant to Section 18959.5 in permitting repairs, alterations and additions necessary for the preservation, restoration, rehabilitation, moving or continued use of an historical building or structure. A state agency shall apply the alternative building regulations adopted by the SHBC Board pursuant to Section 18959.5 in permitting repairs, alterations, and additions necessary for the preservation, restoration, rehabilitation, moving, or continued use of an historical building or structure.

However, be aware that in order to use the SHBC, the structure under consideration must be qualified by being designated as an historical building or structure. Section 18955 states: "For the purposes of this part, a qualified historical building or structure is any structure or collection of structures, and their associated sites deemed of importance to the history, architecture, or culture of an area by an appropriate local or state governmental jurisdiction. This shall include structures on existing or future national, state or local historical registers or official inventories, such as the National Register of Historic Places, State Historical Landmarks, State Points of Historical Interest, and city or county registers or inventories of historical or architecturally significant sites, places, historic districts, or landmarks."

The regulations of the SHBC have the same authority as state law and are to be considered as such. Liability is the same as for prevailing law.

The intent of the SHBC is to save California's architectural heritage by recognizing the unique construction problems inherent in historical buildings and by providing a code to deal with these problems.

Historical Preface

The background of the State Historical Building Code can be traced to December 1973, when the State Department of Parks and Recreation published the California History Plan, Volume I, in which Recommendation No. 11 was proposed by the then California Landmarks Advisory Committee (later to become The State Historical Resources Commission). This proposal expressed a need for a new building code to meet the intent of protecting the public health and safety but retaining "enough flexibility to allow restoration of a Historic feature while still retaining its Historic integrity." Finding No. 11 of this History Plan supported this need by stating that " . . . restoration . . . is frequently made difficult by unnecessarily rigid interpretation of building . . . codes."

In March of 1974, the Landmarks Committee by resolution recommended that the Director of the State Department of Parks and Recreation and the State Architect initiate a study to develop this needed code. These two officials accepted this concept and jointly called a statewide meeting in Sacramento on May 14th of that year. Attending were representatives from both the public and private sectors, such as members of the building industry, design professions, local and state building officials, and others interested in this problem.

Out of this open conference a steering committee was formed to explore in depth the ways and means of implementing the new historical building code concept. This ad hoc committee was chaired by a representative from the California Council,

American Institute of Architects and composed of a comprehensive cross section of the professional organizations and government agencies concerned with design and code enforcement.

Meetings began late in 1974 and continued into early 1975. By April of that year, a legislative subcommittee of the ad hoc group drafted a sample bill for the proposed code and requested that it be carried by Senator James R. Mills, President Pro Tempore of the Senate. After further development and refinement, the enacting legislation to create the authority for the code and an advisory board to prepare regulations to implement it (SB 927, Mills) was supported by both the legislature and the public. It was signed by the governor in September 1975, and became effective January 1, 1976.

The members of the advisory board, which were required by law to include local and state building officials, individuals from the building industry and design professions as well as representatives from city and county governments, were appointed and held their first session in Sacramento, February 24, 1976. This Board's duties included the preparation of code regulations and the review of specific historic building cases, when officially requested by governing bodies.

Several of the Board's members were a part of the original adhoc steering committee and thus provided a continuity and smooth transition from the inception of the code's philosophy to its pragmatic implementation in these performance-oriented regulations.

The first comprehensive regulations were codified in August and October 1979, after years of careful deliberation. Those regulations allowed all jurisdictions to utilize them at their discretion
in replacing or modifying details of prevailing prescriptive codes.

These current performance regulations were adopted by the Board on June 23, 1998, and approved by the California Building Standards Commission on July 21, 1998.

Chapter 8-1
ADMINISTRATION

SECTION 8-101 – TITLE, PURPOSE AND INTENT

8-101.1 Title. These regulations shall be known as the State Historical Building Code and will be referred to herein as "the SHBC."

8-101.2 Purpose. The purpose of this code is to provide regulations for the preservation, restoration, rehabilitation, relocation or reconstruction of buildings or structures designated as qualified historical buildings or properties (as defined in Section 8-218). Such regulations are intended to provide alternative solutions for the preservation of qualified historical buildings or properties, to provide access for persons with disabilities, to provide a cost-effective approach to preservation, and to provide for the reasonable safety of the occupants or users. These regulations require enforcing agencies to accept reasonably equivalent alternatives to the regular code (as defined in Section 8-219) when dealing with qualified historical buildings or properties.

8-101.3 Intent. It is the intent of these regulations to facilitate the preservation and continuing use of qualified historical buildings or properties while providing reasonable safety for the building occupants and access for persons with disabilities.

SECTION 8-102 – APPLICATION

8-102.1 Application. These regulations are applicable for all issues regarding building code compliance for qualified historical buildings or properties. These regulations are to be used in conjunction with the regular code to provide alternatives to the regular code to facilitate the preservation of qualified historical buildings or properties. These regulations shall be used whenever compliance with the regular code is required for qualified historical buildings or properties.

8-102.1.1 Additions, alterations and repairs. It is the intent of these regulations to allow nonhistorical expansion or addition to a qualified historical building or property provided:

1. Nonhistorical additions shall conform to the requirements of the regular code. See Section 8-202.A.

2. Additions, alterations or repairs shall not cause a qualified historical building or structure to become unsafe or overloaded.

8-102.1.2 Relocation. Relocated qualified historical buildings or properties shall be sited to comply with the regular code or as provided for in this code. New nonhistorical construction related to relocation shall comply with the regular code. Historical reconstruction and restoration related to relocation may comply with the alternatives contained in this code.

8-102.1.3 Change of occupancy. [8-106] For change of use or occupancy, see Chapter 8-3, Use and Occupancy.

8-102.1.4 Continued use. Qualified historical buildings or properties may have their existing use or occupancy continued if such use or occupancy does not constitute a distinct hazard to life safety as defined in this code.

8-102.1.5 Unsafe buildings. [8-109] When a qualified historical building or property is determined to be unsafe as defined in the regular code, the requirements of this code are applicable to the work necessary to correct the unsafe conditions. Work to remedy the building shall be limited to the correction of the unsafe conditions, and it shall not be required to bring the entire building in compliance with regular code.

NOTE: See Section 8-703, Structural Survey, to determine when a structural survey is required.

SECTION 8-103 – ORGANIZATION AND ENFORCEMENT

8-103.1 Authority. The state or local enforcing agency, pursuant to authority provided under Section 18954 of the Health and Safety Code, shall apply the provisions of this code in permitting repairs, alterations and additions necessary for the preservation, restoration, reconstruction, rehabilitation, moving or continued use of a qualified historical building or property when so elected by the private property owner.

8-103.2 State Enforcement. All the state agencies per Section 18958 of the Health and Safety Code shall administer and enforce this code with respect to qualified historical buildings or properties under their respective jurisdiction.

8-103.3 Liability. [8-204] Prevailing law regarding immunity of building officials is unaffected by the use and enforcement of this code.

SECTION 8-104 – REVIEW AND APPEALS

8-104.1 State Historical Building Safety Board (SHBSB). In order to provide for interpretation of the provisions of this code and to hear appeals, the SHBSB shall act as a review body to state and local agencies or any affected party.

8-104.2 SHBSB Review. [8-1403] When a proposed design, material or method of construction is being considered by the enforcing agency, the agency chief, the building official or the local board of appeals may file a written request for opinion to the SHBSB for its consideration, advice or findings. In considering such request, the SHBSB may seek the advice of other appropriate private or public boards, individuals, or state or local agencies. The SHBSB shall, after considering all of the facts presented, including any recommendation of other appropriate boards, agencies or other parties, determine if, for the purpose intended, the proposal is reasonably equivalent to that allowed by these regulations in proposed design, material or method of construction, and it shall transmit such findings and its decision to the enforcing agency for its application. The Board shall recover the costs of such reviews and shall report the decision in printed form, copied to the California Building Standards Commission.

8-104.3 SHBC Appeals. [8-1404] If any local agency administering and enforcing this code or any person adversely affected by any regulation, rule, omission, interpretation, decision or practice of the agency enforcing this code wishes to appeal the issue for resolution to the SHBSB, either of these parties may appeal directly to the Board. The Board may accept the appeal only if it determines that issues involved are of statewide significance. The Board shall recover the costs of such reviews and shall make available copies of decisions in printed form at cost, copied to the California Building Standards Commission.

8-104.4 Costs for Board Action and Informational Material. An estimate of the review and appeals process can be provided by contacting:

Executive Director
The State Historical Building Safety Board

Cost information and availability of the codes, hearing information, informational and background material, and Board decisions are available from the same source.

8-104.5 Local Agency Fees. Local agencies, when actively involved in the appeal, may also charge affected persons reasonable fees not to exceed the cost of obtaining reviews and appeals from the Board.

SECTION 8-105 – CONSTRUCTION METHODS AND MATERIALS

8-105.1 Repairs. Repairs to any portion of a qualified historical building or property may be made in-kind with historic materials and the use of original or existing historic methods of construction, subject to conditions of this code. (See Chapter 8-8.)

8-105.2 Alternatives to the State Historical Building Code. It is the intent of this code to allow the use of these alternatives or any other acceptable regulation or methodology of design or construction in whole or in part, with the regular code, or in any combination of the regular code and this code. These regulations are not intended to preclude the use of any proposed alternative or method of design or construction not specifically prescribed or otherwise allowed by these regulations. Any other alternative may be submitted for evaluation to the appropriate enforcing agency for review and acceptance. The enforcing agency may request that sufficient evidence or proof be submitted to substantiate any claims that may be made regarding such alternatives. Any alternative offered in lieu of that prescribed or allowed in this code shall be reasonably equivalent in quality, strength, effectiveness, durability and safety to that of this code.

SECTION 8-106 – SHBSB RULINGS

8-106.1 General. Rulings of the SHBSB (i.e., formal appeals case decisions, code interpretations and administrative resolutions, etc.) that are issues of statewide application are required to
be submitted to the California Building Standards Commission in printed form. The purpose of these rulings is to provide guidance for similar cases or issues.

> **NOTE:** The past appellate and interpretive rulings of the SHBSB are being compiled and catalogued and will be published as an appendix with the State Historical Building Code.

Chapter 8-2
DEFINITIONS

SECTION 8-201 – DEFINITIONS

For the purpose of this code, certain terms and phrases, words, and their derivatives shall be construed as specified in this chapter. Additional definitions and/or terms may appear in the various other chapters relative to terms or phrases primarily applicable thereto. Any reference to .authority having jurisdiction. does not necessarily preclude the appellate process of Section 8-104.3.

SECTION 8-202 – A

ADAPTIVE REUSE. The process of adapting a property, site, building, or structure for a use other than that for which it was originally designed or previously used.

ADDITION. A non-historical extension or increase in floor area or height of a building or structure.

ALTERATION. A modification to a building or structure that affects usability of the building or structure, or part thereof. Alterations include, but are not limited to, remodeling, renovation, rehabilitation, reconstruction, historic restoration, changes or rearrangement of the structural parts or elements, and changes or rearrangements in the plan configuration of walls and full-height partitions.

ARCHITECTURAL SIGNIFICANCE. Importance of a historic property based on physical aspects of its design, materials, form, style or workmanship.

SECTION 8-203 – B

BUILDING. Any structure used or intended for supporting or sheltering any use or occupancy.

SECTION 8-204 – C

CHARACTER-DEFINING FEATURE. Those visual aspects and physical elements that comprise the appearance of a historic building, structure or property, and that are significant to its historic, architectural and cultural values, including the overall shape of the structure, building or property, its materials, craftsmanship, decorative details, interior spaces and features, as well as the various aspects of its site and environment.

CONSERVATION. The practice of prolonging the physical and aesthetic life of prehistoric and historic material culture through documentation, preventive care, treatment and research.

CULTURAL RESOURCE. Building, site, structure, object, or district evaluated as having significance in prehistory or history.

SECTION 8-205 – D

DISTINCT HAZARD. Any clear and evident condition that exists as an immediate danger to the safety of the occupants. Conditions that do not meet the requirements of current regular codes
and ordinances do not, of themselves, constitute a distinct hazard. Section 8-104.3, SHBC Appeals, remains applicable.

DISTRICT. A historic district possessing a significant concentration, linkage, or continuity of sites, buildings, structures, or objects, or combination thereof, united historically or aesthetically by plan or physical development.

SECTION 8-206 – E

No definitions.

SECTION 8-207 – F

FACILITIES. A building and such other structures, topography, or development that may be within the confining or legal limits of the qualified historic property, site, group of such sites, historic district or districts.

FIRE HAZARD. Any condition or act which increases, or may increase the hazard or menace of fire to a greater degree than customarily recognized by the authority having jurisdiction, or any condition or act which could obstruct, delay, hinder or interfere with the operations of firefighting personnel or the egress of occupants in the event of fire. Section 8-104.3, SHBC Appeals, remains applicable.

SECTION 8-208 – G

No definitions.

SECTION 8-209 – H

HISTORIC FABRIC OR MATERIALS. Original and later added significant construction materials, architectural finishes or elements in a particular pattern or configuration which form a historical property, as determined by the authority having jurisdiction.

HISTORICAL SIGNIFICANCE. Importance for which a property has been evaluated and found to be historic, as determined by the authority having jurisdiction.

SECTION 8-210 – I

IMMINENT THREAT. Any condition within or affecting a structure which, in the opinion of the authority having jurisdiction, would qualify a building or structure as dangerous to the extent that the life, health, property or safety of the public, its occupants or those performing necessary repair, stabilization or shoring work are in immediate peril due to conditions affecting the building or structure. Potential hazards to persons using, or improvements within, the right-of-way may not be construed to be imminent threats solely for that reason if the hazard can be mitigated by shoring, stabilization, barricades or temporary fences.

INTEGRITY. Authenticity of a property's historic identity, evidenced by the survival of physical characteristics that existed during the property's historic or prehistoric period.

SECTION 8-211 – J

No definitions.

SECTION 8-212 – K

No definitions.

SECTION 8-213 – L

LIFE-SAFETY EVALUATION. An evaluation of the life-safety hazards of a building or structure based on procedures similar to those contained in NFPA 909, Standard for the Protection of Cultural Resources, Appendix B, Fire Risk Assessment in Heritage Premises.

SECTION 8-214 -- M

No definitions.

SECTION 8-215 -- N

No definitions.

SECTION 8-216 -- O

OBJECT. Used to distinguish from buildings and structures those constructions or monuments that are primarily artistic in nature or are relatively small in scale and simply constructed. Although it may be, by nature or design, movable, an object is associated with a specific setting or environment.

SECTION 8-217 -- P

PERIOD OF SIGNIFICANCE. The length of time when a historic building, property or site was associated with important events, activities, or persons, or attained the characteristic which qualifies it for listing or registration.

PRESERVATION. The act or process of applying measures necessary to sustain the existing form, integrity, and materials of a historic property, building or structure. Work, including preliminary measures to protect and stabilize the property, generally focuses upon the ongoing maintenance and repair of historic materials and features rather than extensive replacement and new construction. New exterior additions are not within the scope of this treatment; however, the limited and sensitive upgrading of mechanical, electrical, and plumbing systems and other code-related work to make properties functional is appropriate within a preservation project.

SECTION 8-218 – Q

QUALIFIEDHISTORICAL BUILDING OR PROPERTY. Any building, site, structure, object, district or collection of structures, and their associated sites, deemed of importance to the history, architecture or culture of an area by an appropriate local, state or federal governmental jurisdiction. This shall include designated buildings or properties on, or determined eligible for, official national, state or local historical registers or official inventories, such as the National Register of Historic Places, California Register of Historical Resources, State Historical Land-marks, State Points of Historical Interest, and officially adopted city or county registers, inventories, or surveys of historical or architecturally significant sites, places or landmarks.

SECTION 8-219 – R

RECONSTRUCTION. The act or process of depicting, by means of new construction, the form, features, and detailing of a nonsurviving site, landscape, building, structure or object for the purpose of replicating its appearance at a specific period of time.

REGULAR CODE. The adopted regulations that govern the design and construction or alteration of nonhistorical buildings, structures and properties within the jurisdiction of the enforcing agency.

REHABILITATION. The act or process of making possible a compatible use for a property, building or structure through repair, alterations and additions while preserving those portions or features which convey its historical, cultural, or architectural values.

RELOCATION. The act or process of moving any structure or a portion of a structure that may be moved to a new site, or a different location on the same site.

REPAIR. Renewal, reconstruction or renovation of any portion of an existing property, site or building for the purpose of its continued use.

RESTORATION. The act or process of accurately depicting the form, features and character of a property, building or structure as it appeared at a particular period of time by the means of the removal of features from other periods in its history and reconstruction of missing features from the restoration period. The limited and sensitive upgrading of mechanical, electrical and plumbing systems and other code-required work to make properties functional is appropriate within a restoration project.

SECTION 8-220 – S

STRUCTURE. That which is built or constructed, an edifice or a building of any kind, or any piece of work artificially built up or composed of parts joined together in some definite manner.

Chapter 8-3
USE AND OCCUPANCY

SECTION 8-301 – PURPOSE AND SCOPE

8-301.1 Purpose. The purpose of this chapter is to provide alternative regulations for the determination of occupancy classifications and conditions of use for buildings or structures designated as qualified historical buildings or properties.

8-301.2 Scope. Every qualified historical building or property for which a building permit has been requested shall be classified prior to permit issuance according to its use or the character of its occupancy in accordance with the regular code and applicable provisions of this chapter.

SECTION 8-302 – GENERAL

8-302.1 Existing Use. The use or character of occupancy of a qualified historical building or property, or portion thereof, shall be permitted to continue in use regardless of any period of time in which it may have remained unoccupied or in other uses, provided such building or property otherwise conforms to all applicable requirements of this chapter.

8-302.2 Change in Occupancy. The use or character of the occupancy of a historical building may be changed from its historic use or character provided the building conforms to the requirements applicable to the new use or character of occupancy as set forth in this code. Such change in occupancy shall not mandate conformance with new construction requirements as set forth in prevailing regular code, provided the new use or occupancy does not create a fire hazard or other condition detrimental to the safety of occupants or of firefighting personnel.

8-302.3 Occupancy Separations. Required occupancy separations of more than one hour may be reduced to one-hour fire-resistive construction with all openings protected by not less than three-fourths-hour fire-resistive assemblies of the self-closing or automatic-closing type when the building is provided with an approved automatic sprinkler system throughout the entire building in accordance with prevailing code. Doors equipped with automatic-closing devices shall be of a type which will function upon activation of a device which responds to products of combustion other than heat.

Required occupancy separations of one hour may be omitted when the building is provided with an approved automatic sprinkler system throughout.

8-302.4 Maximum Floor Area. Regardless of the use or character of occupancy, the area of a one-story historical building may have, but shall not exceed, a floor area of 15,000 square feet (1393.5 m2) unless such increase is otherwise permitted in prevailing code. Multistory buildings (including basements and cellars) shall be in accordance with regular code requirements.

> **EXCEPTION:** Historic buildings provided with an approved automatic sprinkler system may be unlimited in floor area without fire-resistive area separation walls.

8-302.5 Maximum Height. The maximum height and number of stories of a historical building shall not be limited because of construction type, provided such height or number of stories does not exceed that of its designated historical design.

8-302.6 Fire-resistive Construction. See Chapter 8-4.

8-302.7 Light and Ventilation. Existing provisions for light and ventilation which do not, in the opinion of the enforcing agency, constitute a safety hazard may remain. See Section 8-303.6 for residential requirements. See Section 8-503, Escape or Rescue Windows and Doors.

SECTION 8-303 – RESIDENTIAL OCCUPANCIES

8-303.1 Purpose. The purpose of this section is to provide alternative regulations for those buildings or structures designated as qualified historical buildings or properties and classified as residential occupancies. These regulations require enforcing

agencies to accept any reasonably equivalent alternatives to the regular code when dealing with qualified historical buildings and properties.

8-303.2 Intent. It is the intent of these regulations to preserve the integrity of qualified historical buildings and properties while maintaining a reasonable degree of protection of life, health and safety for the occupants.

8-303.3 Application and Scope. The provisions of this section shall apply to all qualified historical buildings used for human habitation. Those dwelling units intended only for display, or public use with no dwelling use involved, need not comply with the requirements of this section.

8-303.4 Alternative Exit Definitions.

8-303.4.1 Exit ladder device. An exit ladder device is a permanently installed, fixed, folding, retractable, or hinged ladder intended as a means of emergency egress from areas of the second or third stories. Unless approved specifically for a longer length, the use shall be limited to 25 feet (7620 mm) in length. Exit ladders are permitted in areas serving an occupant load of less than 10 persons.

8-303.4.2 Fire escapes. See Chapter 8-5.

8-303.5 Room Dimensions. Rooms used for sleeping purposes may contain a minimum of 50 square feet (4.6 m2) floor area provided there is maintained an average ceiling height of 7 feet (2134 mm). Other habitable rooms need only be of adequate size to be functional for the purpose intended.

8-303.6 Light and Ventilation. Windows in habitable rooms shall have an area of 6 percent of the floor area, or 6 square feet (0.56 m2), whichever is greater. Windows in sleeping rooms shall be openable (see Section 8-503). Dwelling occupancies need not be provided with electrical lighting.

8-303.7 Alteration and Repair. The alteration and repair of historical buildings may permit the replacement, retention and extension of original materials and the continued use of original methods of construction provided a life-safety hazard is not created or continued in existence.

The amount of alterations and repairs is not limited provided there is no nonhistorical increase in floor area, volume or size of the structure.

8-303.8 Exiting. See Chapter 8-5.

Chapter 8-4
FIRE PROTECTION

SECTION 8-401 – PURPOSE, INTENT AND SCOPE

8-401.1 Purpose. The purpose of this chapter is to provide alternative regulations for fire protection of buildings or structures designated as qualified historical buildings or properties. These regulations require enforcing agencies to accept any reasonably equivalent alternatives to the regular code when dealing with qualified historical buildings or properties.

8-401.2 Intent. The intent of these regulations is to preserve the integrity of qualified historical buildings and properties while maintaining a reasonable degree of fire protection based primarily on the life safety of the occupants and firefighting personnel.

8-401.3 Scope. This chapter shall apply when required by the provisions of Section 8-102.

SECTION 8-402 – FIRE-RESISTIVE CONSTRUCTION

8-402.1 Exterior Wall Construction. The fire-resistance requirement for existing exterior walls and existing opening protection may be satisfied when an automatic fire-extinguishing system designed for exposure protection is installed. The automatic sprinklers may be installed on the exterior under the roof line with at least one sprinkler head located over each opening required to be protected. Additional sprinkler heads shall also be distributed along combustible walls that do not meet the fire-resistive requirement due to their relationship to property lines as required by regular code. Such sprinkler system may be connected to an adequate domestic water supply on the street-main side of the building shut-off valve. A shut-off valve may be installed for the sprinkler system provided it is locked in an open position.

8-402.2 One-hour Construction. Upgrading an existing qualified historic building or property to one-hour fire-resistive construction and one-hour fire-resistive corridors shall not be required regardless of construction or occupancy when one of the following is provided:

1. An automatic fire sprinkler system throughout.

2. An approved life-safety evaluation.

3. Other alternative measures are approved by the enforcing agency.

8-402.3 Glazing in Fire-rated Systems. Historic glazing materials in interior walls required to have one-hour fire rating may be approved subject to the concurrence of the enforcing agency when provided with approved smoke seals and when the area affected is provided with an automatic sprinkler system.

SECTION 8-403 – INTERIOR FINISH MATERIALS

New nonhistoric interior wall and ceiling finish shall conform to the provisions of the regular code. Existing nonconforming materials used in interior wall and finishes may be surfaced with an approved fire retardant to increase the rating of the natural finish to within reasonable proximity of the required rating. For wood lath and plaster walls, see Section 8-404.

> **EXCEPTION:** When an approved automatic sprinkler system is provided throughout the building, existing finishes need not be fire retardant.

SECTION 8-404 – WOOD LATH AND PLASTER

Wood lath and plaster walls may be considered in accordance with codes, standards, and listings published prior to 1943 whereby a wood stud wall assembly with gypsum or lime plaster on hand split or sawn wooden lath obtains a one-half-hour fire-resistive rating. This rating may be increased for interior walls to as much as one hour by filling the wall with mineral fiber or glass fiber.

SECTION 8-405 – OCCUPANCY SEPARATION

See Chapter 8-3.

SECTION 8-406 – MAXIMUM FLOOR AREA

See Chapter 8-3.

SECTION 8-407 – VERTICAL SHAFTS

Vertical shafts need not be enclosed when such shafts are blocked at every floor level by the installation of not less than 2 full inches (51 mm) of solid wood or equivalent construction installed as to prevent the initial passage of smoke and flame. Approved automatic sprinkler systems or other solutions may be considered on a case-by-case basis, in lieu of enclosure of vertical shafts and stairwells.

SECTION 8-408 – ROOF COVERING

Existing or original roofing materials may be repaired or reconstructed subject to the following requirements:

1. The original or historic roofing system shall be detailed or modified as necessary in order to be capable of providing shelter to the building occupants and exclude dampness, while preserving the historic materials and appearance of the roof.

2. Wooden roof materials may be utilized where fire resistance is required provided they are treated with fire-retardant treatments to achieve an equivalence to a Class C fire-resistive rating, or as otherwise permitted on a case-by-case basis.

SECTION 8-409 – FIRE ALARM SYSTEMS

Every qualified historical building or property shall be provided with fire alarm systems as required for the use or occupancy by the regular code or other approved alternative.

SECTION 8-410 – AUTOMATIC FIRE-EXTINGUISHING SYSTEMS

8-410.1 Every historical building which cannot be made to conform to the construction requirements specified in the regular code for the occupancy or use, and which constitutes a distinct fire hazard (for definition of "distinct hazard," see Section 8-205), shall be deemed to be in compliance if provided with an approved automatic fire-extinguishing system.

EXCEPTION: When an alternative life-safety system is approved by the enforcing agency.

8-410.2 An automatic fire-extinguishing system shall not be used to substitute for or act as an alternative to the required number of exits from any facility. (See Chapter 8-5 for exiting requirements.)

8-410.3 An automatic fire-extinguishing system shall be provided in all detention facilities.

Chapter 8-5
MEANS OF EGRESS

SECTION 8-501 – PURPOSE, INTENT AND SCOPE

8-501.1 Purpose. The purpose of this chapter is to establish minimum means of egress regulations for qualified historical buildings or properties. These regulations require enforcing agencies to accept reasonably equivalent alternatives to the means of egress requirements in the regular code.

8-501.2 Intent. It is the intent of these regulations to provide an adequate means of egress.

8-501.3 Scope. Every qualified historical building or portion thereof shall be provided with exits as required by this chapter when required by the provisions of Section 8-102.

SECTION 8-502 – GENERAL

8-502.1 General. Except as provided in this section, exits shall conform or be made to conform to the provisions of the regular code.

EXCEPTIONS:

1. New fire escapes and fire escape ladders which comply with Section 8-502.2 shall be acceptable as one of the of egress required means of egress.

2. Existing previously approved fire escapes and fire escape ladders shall be acceptable as one of the required means provided they extend to the ground and are easily negotiated, adequately signed, and in good working order. Access shall be by an opening having a minimum width and height of 29 inches (737 mm) when open. No sill shall be more than 30 inches (762 mm) above the adjacent floor, landing or approved step.

3. The enforcing agency shall grant reasonable exceptions to specific provisions covered under applicable regulations where such exceptions will not adversely affect the life safety intended. (Examples: Existing door openings and corridor and stairway widths of less than the specified dimensions may be permitted, provided there is sufficient width and height for a person to pass through the opening or traverse the exit; existing stairways having risers and treads at variance with the specified rise and run for the occupant load and use are allowed.)

4. Upon specific case approval, the front or main exit door(s) need not be rehung to swing in the direction of exit travel provided other means or conditions of exiting, as necessary to serve the total occupant load served, are otherwise provided.

5. In lieu of total conformance with existing exiting requirements, the enforcing agency may accept any other condition which will allow or provide for the ability to quickly and safely evacuate any portion of a building without undue exposure and which will meet the intended exiting and life safety stipulated by these regulations.

8-502.2 Fire Escapes and Fire Escape Ladders. New fire escapes and new fire escape ladders shall comply with the following:

1. Access from a corridor shall not be through an intervening room.

2. All openings within 10 feet (3048 mm) shall be protected by three-fourths-hour fire assemblies. When located within a recess or vestibule, adjacent enclosure walls shall be of not less than one-hour fire-resistive construction.

3. Egress from the building shall be by a clear opening having a minimum dimension of not less than 29 inches (737 mm). Such openings shall be openable from the inside without the use of a key or special knowledge or effort. The sill of an opening giving access shall not be more than 30 inches (762 mm) above the floor, step or landing of the building or balcony.

4. Fire escape stairways and balconies shall support the dead load plus a live load of not less than 100 pounds per square foot (4.79 kN/m2) and shall be provided with a top and intermediate handrail on each side. The pitch of the stairway shall not exceed 72 degrees with a minimum width of 18 inches (457 mm). Treads shall not be less than 4 inches (102 mm) in width and the rise between treads shall not exceed 10 inches (254 mm). All stair and balcony railings shall support a horizontal force of not less than 50 pounds per lineal foot (729.5 N/m) of railing.

5. Balconies shall not be less than 44 inches (1118 mm) in width with no floor opening other than the stairway opening greater than 5/8 inch (15.9 mm) in width. Stairway openings in such balconies shall not be less than 22 inches by 44 inches (559 by 1118 mm). The balustrade of each balcony shall not be less than 36 inches (914 mm) high with not more than 9 inches (287 mm) between balusters.

6. Fire escapes shall extend to the roof or provide an approved gooseneck ladder between the top floor landing and the roof when serving buildings four or more stories in height having roofs with less than 4 units vertical in 12 units horizontal (33.3% slope). Fire escape ladders shall be designed and connected to the building to withstand a horizontal force of 100 pounds (445 N) placed anywhere on the rung. All ladders shall be at least 15 inches (381 mm) wide, located within 12 inches (305 mm) of the building. Ladder rungs shall be 3/4 inch (19.1 mm) in diameter and shall be located 12 inches (305 mm) on center. Openings for roof access ladders through cornices and similar projections shall have minimum dimensions of 30 inches by 33 inches (762 by 838 mm).

The length of fire escapes and exit ladder devices shall be limited to that approved by the building official based on products listed by a recognized testing laboratory.

7. The lowest balcony shall not be more than 18 feet (5486mm) from the ground. Fire escapes shall extend to the ground or be provided with counterbalanced stairs reaching to the ground.

8. Fire escapes shall not take the place of stairways required by the codes under which the building was constructed.

9. Fire escapes shall be kept clear and unobstructed at all times and maintained in good working order.

SECTION 8-503 – ESCAPE OR RESCUE WINDOWS AND DOORS

Basements in dwelling units and every sleeping room below the fourth floor shall have at least one openable window or door approved for emergency escape which shall open directly into a public street, alley, yard or exit court. Escape or rescue windows or doors shall have a minimum clear area of 3.3 square feet (0.31m2) and a minimum width or height dimension of 18 inches (457 mm) and be operable from the inside to provide a full, clear opening without the use of special tools.

EXCEPTION: Escape or rescue windows in Group R-1 Hotel occupancies may comply with the regular code.

Chapter 8-6
ALTERNATIVE ACCESSIBILITY PROVISIONS

SECTION 8-601 – PURPOSE, INTENT AND SCOPE

8-601.1 Purpose. The purpose of this chapter is to provide alternative regulations to facilitate access and use by persons with disabilities to and throughout buildings or structures designated as qualified historical buildings or properties. These regulations require enforcing agencies to accept any reasonably equivalent alternatives to regular code when dealing with qualified historical buildings or properties.

8-601.2 Intent. It is the intent of this chapter to preserve the integrity of qualified historical buildings and properties while providing access to and use by persons with disabilities.

8-601.3 Scope. These regulations shall apply to every qualified historical building or property that is required to provide access to persons with disabilities.

SECTION 8-602 – BASIC PROVISIONS

8-602.1 Regular Code. The regular code for access for persons with disabilities shall be applied to qualified historical buildings or properties unless strict compliance with the regular code will threaten or destroy the historical significance or character-defining features of the building or property.

8-602.2 Alternative Provisions. If the historical significance or character-defining features are threatened, alternative provisions for access may be applied pursuant to this chapter provided the following conditions are met:

1. Such alternative provisions shall be applied only on an item-by-item or a case-by-case basis. (See, e.g., Section 8-603.)

2. The alternative provisions are applied according to the priorities outlined in Section 8-603 whereby the alternative providing the greatest accessibility is listed first.

3. Documentation is provided stating the reasons for the application of the alternative provisions. Such documentation shall be maintained as a part of the public record.

4. If it is found that the application of the preferred alternatives listed in Section 8-603 threaten the historical significance or character defining features, the provisions of Sections 8-604 and 8-605 may be applied.

SECTION 8-603 – PREFERRED ALTERNATIVES

The alternatives below each category are listed in order of priority. These alternatives apply only to the specific building standards listed below.

8-603.1 Entry. These alternatives do not allow exceptions for the requirement of level landings in front of doors, except as provided in Section 8-603.3. Alternatives listed in order of priority are:

1. Access to any entrance used by the general public and no further than 200 feet (60 960 mm) from the primary entrance.

2. Access at any entrance not used by the general public but open and unlocked with directional signs at the primary entrance and as close as possible to, but no further than 200 feet (60 960 mm) from, the primary entrance.

8-603.2 Doors. Alternatives listed in order of priority are:

1. Single-leaf door which provides a minimum 30 inches (762 mm) of clear opening.

2. Single-leaf door which provides a minimum 291/2 inches (749 mm) clear opening

3. Double door, one leaf of which provides a minimum 291/2 inches (749 mm) clear opening.

4. Double doors operable with a power-assist device to provide a minimum 291/2 inches (749 mm) clear opening when both doors are in the open position.

8-603.3 Power-assisted Doors. A power-assisted door or doors may be considered an equivalent alternative to level landings, strikeside clearance and door-opening forces required by the regular code.

8-603.4 Toilet Rooms. In lieu of separate-gender toilet facilities as required in the regular code, an accessible unisex toilet facility may be designated.

8-603.5 Exterior and Interior Ramps and Lifts. Alternatives listed in order of priority are:

1. A lift or a ramp of greater than standard slope but no greater than 1:10, for horizontal distances not to exceed 12 feet (3658 mm). Signs shall be posted at upper and lower levels to indicate steepness of the slope.

2. Access by ramps of 1:6 slope for horizontal distance not to exceed 13 inches (330 mm). Signs shall be posted at upper and lower levels to indicate steepness of the slope.

3. Access provided by experiences, services, functions, materials and resources through methods, including, but not limited to, maps, plans, videos, virtual reality, and related equipment, at accessible levels. This alternative shall be documented as required in Section 8-605.

SECTION 8-604 – EQUIVALENT FACILITATION

Use of other designs and technologies, or deviation from particular technical and scoping requirements, are permitted if the application of the alternative provisions contained in Section 8-603 would threaten or destroy the historical significance or character-defining features of the building or site or cause unreasonable hardship.

Alternatives to Section 8-604 are permitted only where the following conditions are met:

1. Such alternatives shall be applied only on an item-by-item or a case-by-case basis.

2. The alternative design and/or technologies used will provide substantially equivalent or greater accessibility to, and usability of, the facility.

3. The official charged with the enforcement of the standards shall document the reasons for the application of the alternative design and/or technologies and their effect on the historical significance or character-defining features. Such documentation shall be in accordance with Section 8-602.2, Item 3, and shall include the opinions and comments of state or local accessibility officials and the opinions and comments of representative local groups of

people with disabilities. Such documentation shall be recorded and entered into the permanent file of the enforcing agency.

SECTION 8-605 – EXCEPTIONS

If the historical significance or character-defining features would be threatened or destroyed by the application of alternative access standards as provided by this chapter, and no equivalent facilitation as provided in Section 8-604 is feasible, an exception from the literal requirements for full and equal access or any alternative provisions may be provided only if the following conditions are met:

1. Such exception is considered only on an item-by-item or a case-by-case basis.

2. Interpretive exhibits and/or equal services of the exempted significant historical aspects are provided for the public in a location fully accessible to and usable by persons with disabilities, including persons with hearing and sight impairment.

3. Services are provided in an accessible location equal to those provided in the excepted location.

4. The official charged with enforcement of the standards shall document the reasons for the application of the alternative design and/or technologies and their effect on the historical significance or character-defining features. Such documentation shall be in accordance with Section 8-602.2, Item 3, and shall include the opinions and comments of state or local accessibility officials, and the opinions and comments of representative local groups of people with disabilities. Such documentation shall be recorded and entered into the permanent file of the enforcing agency.

Chapter 8-7
ALTERNATIVE STRUCTURAL REGULATIONS

SECTION 8-701 – PURPOSE, INTENT AND SCOPE

8-701.1 Purpose. The purpose of this chapter is to provide alternative regulations for the structural safety of buildings or structures designated as qualified historical buildings or properties. These regulations require enforcing agencies to accept any reasonably equivalent alternatives to the regular code when dealing with qualified historical buildings or properties.

8-701.2 Intent. It is the intent of these regulations to encourage the preservation of qualified historical buildings while providing a reasonable level of structural safety for occupants and the public at large through the application of this code for such historical structures.

8-701.3 Scope. The alternative structural regulations provided by Section 8-705 are to be applied in conjunction with the regular code whenever a structural upgrade or reconstruction is undertaken for qualified historical buildings or properties.

SECTION 8-702 – GENERAL

8-702.1 These regulations shall not be construed to allow the enforcing agency to approve or permit a lower level of safety of structural design and construction than that which is reasonably equivalent to the regular code provisions in occupancies which are critical to the safety and welfare of the public at large, including, but not limited to, public and private schools, hospitals, municipal police and fire stations and essential services facilities.

8-702.2 Nothing in these regulations shall prevent voluntary and partial seismic upgrades when it is demonstrated that such up-grades will improve life safety and when a full upgrade would not otherwise be required.

SECTION 8-703 – STRUCTURAL SURVEY

8-703.1 Every structure or portion of a structure to be evaluated for structural capacity under this code shall be surveyed for structural conditions by an architect or engineer knowledgeable in historical structures. The survey shall document deterioration or signs of distress. The survey shall determine the details of the structural framing and the system for resistance of gravity and lateral loads. Details, reinforcement and anchorage of structural systems and veneers shall be determined and documented.

8-703.2 The results of the survey shall be utilized for designing modifications to the structural system to reach compliance with this code.

SECTION 8-704 – NONHISTORICAL ADDITIONS AND NONHISTORICAL ALTERATIONS

New nonhistorical additions and nonhistorical alterations which are structurally separated from an existing historical structure shall comply with regular code requirements.

New nonhistorical additions which impose vertical or lateral loads on an existing structure shall not be permitted unless the affected part of the supporting structure is evaluated and strengthened, if necessary, to meet regular code requirements.

NOTE: For use of archaic materials, see Chapter 8-8.

SECTION 8-705 – STRUCTURAL REGULATIONS

8-705.1 Gravity Loads. The capacity of the structure to resist gravity loads shall be evaluated and the structure strengthened as necessary. The evaluation shall include all parts of the load path. Where no distress is evident, and a complete load path is present, the structure may be assumed adequate by having withstood the test of time if anticipated dead and live loads will not exceed those historically present.

8-705.2 Wind and Seismic Loads. The ability of the structure to resist wind and seismic loads shall be evaluated. The evaluation shall be based on the requirements of Section 8-706.

Any unsafe conditions in the lateral-load-resisting system shall be corrected, or alternative resistance shall be provided. Additional resistance shall be provided to meet the minimum requirements of this code.

The architect or engineer shall consider additional measures with minimal loss of, and impact to, historic materials which will reduce damage and needed repairs in future earthquakes to better preserve the historical structure in perpetuity. These additional measures shall be presented to the owner for consideration as part of the rehabilitation or restoration.

SECTION 8-706 – LATERAL LOAD REGULATIONS

8-706.1 Lateral Loads. The forces used to evaluate the structure for resistance to wind and seismic loads need not exceed 0.75 times the seismic forces prescribed by the 1995 edition of the California Building Code (CBC). The seismic forces may be computed based on the Rw values tabulated in the CBC for similar lateral-force-resisting systems. All deviations of the detailing provisions of the lateral-force-resisting systems shall be evaluated for stability and the ability to maintain load-carrying capacity at increased lateral loads. Unreinforced masonry bearing wall buildings shall comply with Appendix Chapter 1 of the Uniform Code for Building Conservationt (UCBC), 1994 edition, and as modified by this code. Reasonably equivalent standards may be used on a case-by-case basis when approved by the authority having jurisdiction.

8-706.2 Existing Building Performance. The seismic resistance may be based upon the ultimate capacity of the structure to perform giving due consideration to ductility and reserve strength of the lateral-force-resisting system and materials while maintaining a reasonable factor of safety. Broad judgment may be exercised regarding the strength and performance of materials not recognized by regular code requirements. (See Chapter 8-8, Archaic Materials and Methods of Construction.)

8-706.2.1 All structural materials or members that do not comply with detailing and proportioning requirements of the regular code shall be evaluated for potential seismic performance and the consequence of noncompliance. All members which might fail and lead to possible collapse, or threaten life safety, shall be judged unacceptable and appropriate structural strengthening shall be developed.

8-706.3 Load Path. A complete and continuous load path, including connections, from every part or portion of the structure to the ground shall be provided for the required forces. It shall be verified that the structure is adequately tied together to perform as a unit when subjected to earthquake forces.

8-706.4 Parapets. Parapets and exterior decoration shall be investigated for conformance to the regular code requirements for anchorage and ability to resist prescribed seismic forces. An exception to regular code requirements shall be permitted for those parapets and decorations which are judged not to be a hazard to life safety.

8-706.5 Historical Records. Past historical records of the structure or similar structures may be used in the evaluation, including the effects of subsequent alterations.

8-706.6 Nonstructural Features. Nonstructural features of a historic structure, such as exterior veneer, cornices and decorations, which might fall and create a life-safety hazard in an earthquake, shall be investigated. Their ability to resist seismic forces shall be verified, or the feature shall be strengthened.

8-706.6.1 Partitions and ceilings of corridors and stairways serving an occupant load of 30 or more shall be investigated to determine their ability to remain in place when the building is subjected to earthquake forces.

Chapter 8-8
ARCHAIC MATERIALS AND METHODS OF CONSTRUCTION

SECTION 8-801 – PURPOSE, INTENT AND SCOPE

8-801.1 Purpose. The purpose of this chapter is to provide regulations for the use of historical methods and materials of construction that are at variance with regular code requirements or are not otherwise codified, in buildings or structures designated as qualified historical buildings or properties. These regulations require enforcing agencies to accept any reasonably equivalent alternatives to the regular code when dealing with qualified historical buildings or properties.

8-801.2 Intent. It is the intent of these regulations to provide for the use of historical methods and materials of construction that are at variance with specific code requirements or are not otherwise codified.

8-801.3 Scope. Any construction type or material that is, or was, part of the historic fabric of a structure is covered by this chapter. Archaic materials and methods of construction present in a historic structure may remain or be reinstalled or be installed with new materials of the same class to match existing conditions.

SECTION 8-802 – GENERAL ENGINEERING APPROACH

Allowable stresses or ultimate strengths for archaic materials shall be assigned based upon similar conventional codified materials, or on tests as hereinafter indicated. The archaic materials and methods of construction shall be thoroughly investigated for their details of construction in accordance with Section 8-703. Testing shall be performed when applicable to evaluate existing conditions. The architect or structural engineer in responsible charge of the project shall assign allowable stresses or ultimate strength values to archaic materials. Such assigned allowable stresses, or ultimate strength values, shall not be greater than those provided for in the following sections without adequate testing, and shall be subject to the concurrence of the enforcing agency.

SECTION 8-803 – NONSTRUCTURAL ARCHAIC MATERIALS

Where nonstructural historic materials exist in uses which do not meet the requirements of the regular code, their continued use is allowed by this code, provided that any public health and life-safety hazards are mitigated subject to the concurrence of the enforcing agency.

SECTION 8-804 – ALLOWABLE CONDITIONS FOR SPECIFIC MATERIALS

Archaic materials which exist and are to remain in historic structures shall be evaluated for their condition and for loads required by this code. The structural survey required in Section 8-703 of this code shall document existing conditions, reinforcement, anchorage, deterioration and other factors pertinent to establishing allowable stresses and adequacy of the archaic materials. The remaining portion of this chapter provides additional specific requirements for commonly encountered archaic materials.

SECTION 8-805 – MASONRY

For adobe, see Section 8-806.

8-805.1 Existing Solid Masonry. Existing solid masonry walls of any type, except adobe, may be allowed, without testing, a maximum value of 3 pounds per square inch (20.7 kPa) in shear where there is a qualifying statement by the architect or engineer that an inspection has been made, that mortar joints are filled and that both brick and mortar are reasonably good. The allowable shear stress above applies to unreinforced masonry, except adobe, where the maximum ratio of unsupported height or length to thickness does not exceed 12, and where minimum quality mortar is used or exists. Wall height or length is measured to supporting or resisting elements that are at least twice as stiff as the tributary wall. Stiffness is based on the gross section. Allowable shear stress may be increased by the addition of 10 percent of the axial direct stress due to the weight of the wall directly above. Higher-quality mortar may provide a greater shear value and shall be tested in accordance with UBC Standard 21-6 as referenced in the 1997 UBC.

8-805.2 Stone Masonry.

8-805.2.1 Solid-backed stone masonry. Stone masonry solidly backed with brick masonry shall be treated as solid brick masonry as described in Section 8-805.1 and in the UCBC, provided representative testing and inspection verifies solid collar joints between stone and brick and that a reasonable number of stones lap with the brick wythes as headers or that steel anchors are present. Solid stone masonry where the wythes of stone effectively overlap to provide the equivalent header courses may also be treated as solid brick masonry.

8-805.2.2 Independent wythe stone masonry. Stone masonry with independent face wythes may be treated as solid brick masonry as described in Section 8-805.1 and the UCBC, provided representative testing and inspection verify that the core is essentially solid in the masonry wall and that steel ties are epoxied in drilled holes between outer stone wythes at floors, roof and at not to exceed 4 feet (1219 mm) on center in each direction, between floors and roof.

8-805.2.3 Testing of stone masonry. Testing of stone masonry shall be similar to UBC Standard 21-6, as referenced in the 1997 UBC, except that representative stones which are not interlocked shall be pulled outward from the wall and shear area appropriately calculated after the test.

8-805.3 Reconstructed Walls. Totally reconstructed walls utilizing original brick or masonry, constructed similar to original, shall be constructed in accordance with the regular code. Repairs or infills may be constructed in a similar manner to the original walls without conforming to the regular code.

SECTION 8-806 – ADOBE

8-806.1 General. Unburned clay masonry may be constructed, reconstructed, stabilized or rehabilitated subject to this chapter. Alternative approaches which provide an equivalent or greater level of safety may be used, subject to the concurrence of the enforcing agency.

8-806.2 Protection. Provisions shall be made to protect adobe structures from moisture and deterioration. The unreinforced adobe shall be maintained in reasonably good condition. Particular attention shall be given to moisture content of adobe walls. Unmaintained or unstabilized walls or ruins shall be evaluated for safety based on their condition and stability. Additional safety measures may be required subject to the concurrence of the enforcing agency.

8-806.3 Requirements. Unreinforced new or existing adobe walls shall meet the following requirements. Where existing dimensions do not meet these conditions, additional strengthening measures may be required.

1. One-story adobe load-bearing walls shall not exceed a height-to-thickness ratio of 6.

2. Two-story adobe structures. height-to-thickness wall ratio shall not exceed 5 at the ground floor and 6 at the second floor, and shall be measured at floor-to-floor height when the second floor and attic ceiling/roof are connected to the wall as described below.

3. Nonload-bearing adobe partitions and gable end walls shall be evaluated for stability and anchored against out-of-plane failure.

4. A bond beam of reinforced concrete or an equivalent design of other materials shall be provided at the top of all adobe walls, and for two-story structures, at the second floor. The size and configuration of the bond beam shall be designed in each case to meet the requirements of the existing conditions and provide an effective brace for the wall.

5. Anchorage of the bond beam of the equivalent design of other materials to the adobe walls shall be provided with anchors or suitable design compatible with the adobe material.

8-806.4 Repair or Reconstruction. Repair or reconstruction of wall area may utilize unstabilized brick or adobe masonry designed to be compatible with the constituents of the existing adobe materials.

8-806.5 Shear Values. Existing adobe may be allowed a maximum value of 4 pounds per square inch (27.6 kPa) for shear, with no increase for lateral forces.

8-806.6 Mortar. Mortar may be of the same soil composition as that used in the existing wall, or in new walls as necessary to be compatible with the adobe brick.

SECTION 8-807 – WOOD

8-807.1 Existing Wood Diaphragms or Walls. Existing wood diaphragms or walls of straight or diagonal sheathing shall be assigned shear resistance values appropriate with the fasteners and materials functioning in conjunction with the sheathing. The structural survey shall determine fastener details and spacings and verify a load path through floor construction. Shear values of Tables 8-8-A and 8-8-B may be used.

8-807.2 Wood Lath and Plaster. Wood lath and plaster walls and ceilings may be utilized using the shear values referenced in Section 8-807.1.

8-807.3 Existing Wood Framing. Existing wood framing members may be assigned allowable stresses consistent with codes in effect at the time of construction. Existing or new replacement wood framing may be of archaic types originally used if properly researched, such as balloon and single wall. Wood joints such as dovetail and mortise and tenon types may be used structurally, provided they are well made. Lumber selected for use and type need not bear grade marks, and greater or lesser species such as low-level pine and fir, boxwood and indigenous hardwoods and other variations may be used for specific conditions where they were or would have been used.

Wood fasteners such as square or cut nails may be used with a maximum increase of 50 percent over wire nails for shear.

SECTION 8-808 – CONCRETE

8-808.1 Materials. Natural cement concrete, unreinforced rubble concrete and similar materials may be utilized wherever that material is used historically. Concrete of low strength and with less reinforcement than required by the regular code may remain with the architect or engineer assigning appropriate values of strength based on testing of samples of the materials. Bond and development lengths shall be determined based on historical information or tests.

8-808.2 Detailing. The architect or engineer shall carefully evaluate all detailing provisions of the regular code which are not met and shall consider the implications of these variations on the ultimate performance of the structure, giving due consideration to ductility and reserve strength.

SECTION 8-809 – STEEL AND IRON

The hand-built, untested use of wrought or black iron, the use of cast iron or grey iron, and the myriad joining methods that are not specifically allowed by code may be used wherever applicable and wherever they have proven their worth under the considerable span of years involved with most historical buildings. Uplift capacity should be evaluated and strengthened where necessary. Fixed conditions or mid height lateral loads on cast iron columns that could cause failure should be taken into account. Existing structural wrought, forged steel or grey iron may be assigned the maximum working stress prevalent at the time of original construction.

SECTION 8-810 – HOLLOW CLAY TILE

The historic performance of hollow clay tile in past earthquakes shall be carefully considered in evaluating walls of hollow clay tile construction. Suitable protective measures shall be provided to prevent blockage of stair shafts, exitways and public ways following an earthquake.

SECTION 8-811 – VENEERS

8-811.1 Terra Cotta and Stone. Terra cotta, cast stone and natural stone veneers shall be investigated for the presence of suitable anchorage. Steel anchors shall be investigated for deterioration or corrosion. New or supplemental anchorage shall be provided as appropriate.

8-811.2 Anchorage. Brick veneer with anchorage at spacings greater than required by the regular code may remain provided the anchorages have not corroded. Nail strength in withdrawal in wood sheathing may be utilized to its capacity in accordance with code values.

SECTION 8-812 – GLASS AND GLAZING

8-812.1 Glazing Subject to Human Impact. Historic glazing material located in areas subject to human impact may be approved subject to the concurrence of the enforcing agency when alternative protective measures are provided. These measures may include, but not be limited to, additional glazing panels, protective film, protective guards or systems, and devices or signs which would provide adequate public safety.

8-812.2 Glazing in Fire-rated Systems. See Section 8-402.3.

TABLE 8-8-A—ALLOWABLE VALUES FOR EXISTING MATERIALS

EXISTING MATERIALS OR CONFIGURATIONS OF MATERIALS	ALLOWABLE VALUES X14.594 for N/m
1. Horizontal diaphragms[2]	
1.1 Roofs with straight sheathing and roofing applied directly to the sheathing	100 lbs. per foot for seismic shear
1.2 Roofs with diagonal sheathing and roofing applied directly to the sheathing	250 lbs. per foot for seismic shear
1.3 Floors with straight tongue-and-groove sheathing	100 lbs. per foot for seismic shear
1.4 Floors with straight sheathing and finished wood flooring with board edges offset or perpendicular	500 lbs. per foot for seismic shear
1.5 Floors with diagonal sheathing and finished wood flooring	600 lbs. per foot for seismic shear
2. Croswalls[2,3]	
2.1 Plaster on wood or metal lath	Per side: 200 lbs. Per foot for seismic shear
2.2 Plaster on gysum lath	175 lbs. Per foot for seismic shear
2.3 Gypsum wallboard, unblocked edges	75 lbs. Per foot for seismic shear
2.4 Gypsum wallboard, blocked edges	125 lbs. Per foot for seismic shear
3. Existing footings, wood framing, structural steel and reinforced steel	
3.1 Plain concrete footings	F_c = 1,500 psi (10.34 Mpa) unless otherwise shown by tests[4]
3.2 Douglas fir wood	Allowable stress same as D.F. No. 1[4]
3.3 Reinforcing steel	F_t = 18,000 lbs. Per square inch (124.1 M/mm^2) maximum
3.4 Structural steel	F_t = 20,000 lbs. Per square inch (137.9 M/mm^2) maximum[4]

[1] Material must be sound and in good condition.
[2] A one-third increase in allowable stress is not allowed.
[3] Shear values of these materials may be combined, except the total combined value shall not exceed 300 pounds per foot (4380 N/m).
[4] Stresses given may be increased for combinations of loads as specified in the regular code.

TABLE 8-8-B—ALLOWABLE VALUES OF NEW MATERIALS USED IN CONJUNCTION WITH EXISTING CONSTRUCTION

NEW MATERIALS OR CONFIGURATIONS OF MATERIALS	ALLOWABLE VALUES
1. Horizontal diaphragms[2]	
1.1 Plywood sheathing nailed directly over existing straight sheathing with ends of plywood sheets bearing on joists or rafters and edges of plywood located on center of individual sheathing boards	225 lbs. Per foot (3283 N/m)
1.2 Plywood sheathing nailed directly over existing diagonal sheathing with ends of plywood sheets bearing on joists or rafters	375 lbs. Per foot (5473 N/m)
1.3 Plywood sheathing nailed directly over existing straight or diagonal sheathing with ends of plywood sheets bearing on joists or rafters with edges of plywood located over new blocking and nailed to provide a minimum nail penetration into framing and blocking of 1 $^{5}/_{8}$ inches (41 mm)	75 percent of the values specified in the regular code
2. Shear walls: (general procedure) Plywood sheathing applied directly over wood studs. No value shall be given to plywood applied over existing plaster or wood sheathing	100 percent of the value specified in the regular code for shear walls
3. Crosswalls: (special procedure only)	
3.1 Plywood sheathing applied directly over wood studs. No value shall be given to plywood applied over existing plaster or wood sheathing	133 percent of the value specified in the regular code for shear walls
3.2 Drywall or plaster applied directly over wood studs	100 percent of the values in the regular code
Drywall or plaster applied to sheathing over existing wood studs	The values specified in the regular code reduced as noted[3](UBC Table 25-1, Footnote 1)
4. Tension bolts	
4.1 Bolts extending entirely through unreinforced masonry walls secured with bearing plates on far side of a three-wythe-minimum wall with at least 30 square inches (19350 mm^2) of area[4,5]	1,800 lbs. (8006 N) per bolt[6] 900 lbs. (4003 N) per bolt for two-wythe walls[6]
4.2 Bolts extending to the exterior face of the wall with a 2 ½-inch (63.5 mm) round plate under the head an drilled at an angle of 221/2 degrees to the horizontal, installed as specified for shear bolts[4,5,7]	1,200 lbs. (5338 N) per bolt
5. Shear bolts Bolts embedded a minimum of 8 inches (203 mm) into unreinforced masonry walls and centered in a 2 ½ -inch-diameter (63.5 mm) hole filled with dry-pack or nonshrink grout. Through bolts with first 8 inches (203 mm) as noted above and embedded bolts as noted in Item 4.2 [5,7]	½-inch (12.7 mm) diameter = 350 lbs. (1557 N)[6] 5/8-inch (15.9 mm) diameter = 500 lbs. (2224 N)[6] ¾-inch (19 mm) diameter = 750 lbs (3336 N)[6]
6. Infilled walls Reinforced masonry infilled openings in existing unreinforced masonry walls. Provide keys or dowels to match reinforcing	Same as values specified for unreinforced masonry walls
7. Reinforced masonry Masonry piers and walls reinforced per the regular code	Same as values specified in the regular code
8. Reinforced concrete Concrete footings, walls and piers reinforced as specified in the regular code and designed for tributary loads	Same values specified in the regular code[8]

[1]A one-third increase in allowable stress is not allowed, except as noted.
[2]Values and limitations are for nailed plywood. Higher values may be used for other fastening systems such as wood screws or staples when approved by the enforcing authority.
[3]In addition to existing sheathing value.
[4]Bolts to be 1/2-inch (12.7 mm) minimum diameter.
[5]Drilling for bolts and dowels shall be done with an electric rotary drill. Impact tools shall not be used for drilling holes or tightening anchors and shear bolt nuts.
[6]Other bolt sizes, values and installation methods may be used provided a testing program is conducted in accordance with regular code standards. Bolt spacing shall not exceed 6 feet (1830 mm) on center and shall not be less than 12 inches (305 mm) on center.
[7]Embedded bolts to be tested as specified in regular code standards.
[8]Stresses given may be increased for combinations of loads as specified in the regular code.

Chapter 8-9
MECHANICAL, PLUMBING AND ELECTRICAL REQUIREMENTS

SECTION 8-901 – PURPOSE, INTENT AND SCOPE

8-901.1 Purpose. The purpose of this chapter is to provide alternative regulations for the mechanical, plumbing and electrical systems of buildings or structures designated as qualified historical buildings or properties. These regulations require enforcing agencies to accept any reasonable equivalent alternatives to the regular code when dealing with qualified historical buildings or properties.

8-901.2 Intent. It is the intent of these regulations to preserve the integrity of qualified historical buildings or properties while providing a reasonable level of protection from fire, health, and life-safety hazards (hereinafter referred to as safety hazards) for the building occupants.

8-901.3 Scope. These regulations are to be applied in combination with the regular code whenever application with the regular code is desired by owners of qualified historical buildings or properties.

8-901.4 Safety Hazard. No person shall permit any safety hazard to exist on premises under their control, or fail to take immediate action to abate such hazard. Existing systems which constitute a safety hazard when operational may remain in place provided they are completely and permanently rendered inoperative. Safety hazards created by inoperative systems shall not be permitted to exist. Requirements of the regular code concerning general regulations shall be complied with, except that the enforcing agency shall accept alternatives which do not cause a safety hazard.

8-901.5 Energy Conservation. [8-604] Historical buildings covered by this part are exempted from compliance with energy conservation standards. When new appliances or equipment are added, they should comply with the regular code.

SECTION 8-902 – MECHANICAL

8-902.1 General. Mechanical systems shall comply with the regular code unless otherwise modified by this chapter.

8-902.1.1 The provisions of these regulations shall apply to the acceptance, location, installation, alteration, repair, relocation, replacement or addition of any heating, ventilating, air conditioning, domestic incinerators, kilns or miscellaneous heat-producing appliances or equipment within or attached to a historical building.

8-902.1.2 Existing systems which do not, in the opinion of the enforcing agency, constitute a safety hazard may remain in use.

8-902.1.3 The enforcing agency may approve any alternative to these regulations which would achieve equivalent life safety.

8-902.2 Heating Facilities. All dwelling-type occupancies covered under this chapter shall be provided with heating facilities. Wood-burning or pellet stoves or fireplaces may be acceptable as heating facilities.

8-902.3 Fuel Oil Piping and Tanks. Fuel oil piping and tanks shall comply with regular code requirements except that the enforcing agency may waive such requirements where the lack of compliance does not create a safety or environmental hazard.

8-902.4 Heat-producing and Cooling Equipment. Heat-producing and cooling equipment shall comply with the regular code requirements governing equipment safety, except that the enforcing agency may accept alternatives which do not create a safety hazard.

8-902.5 Combustion Air.

8-902.5.1 All fuel-burning appliances and equipment shall be provided a sufficient supply of air for proper fuel combustion, ventilation, and draft hood dilution.

8-902.5.2 The enforcing agency may require operational tests for combustion air systems which do not comply with applicable requirements of the regular code.

8-902.6 Venting of Appliances.

8-902.6.1 Every appliance required to be vented shall be connected to an approved venting system. Venting systems shall develop a positive flow adequate to convey all combustion products to the outside atmosphere.

8-902.6.2 Masonry chimneys in structurally sound condition may remain in use for all fuel-burning appliances. Terra cotta chimneys and Type C metallic vents installed in concealed spaces shall not remain in use unless otherwise mitigated and approved on a case-by-case basis.

8-902.6.3 The enforcing agency may require operational tests for venting systems which do not comply with applicable requirements of the regular code.

8-902.7 Ducts.

8-902.7.1 New ducts shall be constructed and installed in accordance with applicable requirements of the regular code.

8-902.7.2 Existing duct systems which do not comply with applicable requirements of the regular code and do not, in the opinion of the enforcing agency, constitute a safety or health hazard may remain in use.

8-902.8 Ventilating Systems.

8-902.8.1 Ventilating systems shall be installed so that no safety hazard is created.

8-902.8.2 Grease hoods and grease hood exhaust systems shall be furnished and installed in accordance with applicable requirements of the regular code. Existing systems which are altered shall comply with the regular code.

8-902.9 Miscellaneous Equipment Requirements.

8-902.9.1 The following appliances and equipment shall be installed so that no safety hazard is created: warm air furnaces, space heating equipment, vented decorative appliances, floor furnaces, vented wall furnaces, unit heaters, room heaters, absorption units, refrigeration equipment, duct furnaces, infrared radiant heaters, domestic incinerators, miscellaneous heat-producing appliances and water heaters.

8-902.9.2 Storage-type water heaters shall be equipped with a temperature- and pressure-relief valve in accordance with applicable requirements of the regular code.

SECTION 8-903 – PLUMBING

8-903.1 General. Plumbing systems shall comply with the regular code unless otherwise noted.

8-903.1.1 The provisions of these regulations shall apply to the acceptance, location, installation, alteration, repair, relocation, replacement or addition of any plumbing system or equipment within or attached to a historical building.

8-903.1.2 Existing systems which do not, in the opinion of the enforcing agency, constitute a safety hazard may remain in use.

8-903.1.3 The enforcing agency may approve any alternative to these regulations which achieves reasonably equivalent life safety.

8-903.2 Dwelling-type Occupancies.

8-903.2.1 Where toilet facilities are provided, alternative sewage disposal methods may be acceptable if approved by the local health department. In hotels, where private facilities are not provided, water closets at the ratio of one for each 15 rooms may be acceptable.

8-903.2.2 Toilet facilities are not required to be on the same floor or in the same building as sleeping rooms. Water-flush toilets may be located in a building immediately adjacent to the sleeping rooms. When alternative sewage disposal methods are utilized, they shall be located a minimum distance from the sleeping rooms or other locations as approved by the local health department.

8-903.2.3 Kitchen sinks shall be provided in all kitchens. The sink and countertop may be of any smooth nonabsorbent finish which can be maintained in a sanitary condition.

8-903.2.4 Hand washing facilities shall be provided for each dwelling unit and each hotel guest room. A basin and pitcher may be acceptable as adequate hand washing facilities.

8-903.2.5 Hot or cold running water is not required for each plumbing fixture, provided a sufficient amount of water is supplied to permit the fixture's normal operation.

8-903.2.6 Bathtubs and lavatories with filler spouts less than 1 inch (25.4 mm) above the fixture rim may remain in use provided there is an acceptable overflow below the rim.

8-903.3 Materials. New, nonhistorical materials shall comply with the regular code requirements. The enforcing agency shall accept alternative materials which do not create a safety hazard where their use is necessary to maintain the historical integrity of the building.

8-903.4 Drainage and Vent Systems. Plumbing fixtures shall be connected to an adequate drainage and vent system. The enforcing agency may require operational tests for drainage and vent systems which do not comply with applicable requirements of the regular code. Vent terminations may be installed in any location which, in the opinion of the enforcing agency, does not create a safety hazard.

8-903.5 Indirect and Special Wastes. Indirect and special waste systems shall be installed so that no safety hazard is created. Chemical or industrial liquid wastes which may detrimentally affect the sanitary sewer system shall be pretreated to render them safe prior to discharge.

8-903.6 Traps and Interceptors. Traps and interceptors shall comply with the regular code requirements except that the enforcing agency shall accept alternatives which do not increase the safety hazard. Properly maintained .S. and drum traps may remain in use.

8-903.7 Joints and Connections.

8-903.7.1 Joints and connections in new plumbing systems shall comply with applicable requirements of the regular code.

8-903.7.2 Joints and connections in existing or restored systems may be of any type that does not create a safety hazard.

8-903.8 Water Distribution. Plumbing fixtures shall be connected to an adequate water distribution system. The enforcing agency may require operational tests for water distribution systems which do not comply with applicable requirements of regular code. Prohibited (unlawful) connections and cross connections shall not be permitted.

8-903.9 Building Sewers and Private Sewage Disposal Systems. New building sewers and new private sewage disposal systems shall comply with applicable requirements of the regular code.

8-903.10 Fuel-gas Piping. Fuel-gas piping shall comply with the regular code requirements except that the enforcing agency shall accept alternatives which do not increase the safety hazard.

SECTION 8-904 – ELECTRICAL

8-904.1 General. Electrical systems shall comply with the regular code unless otherwise permitted by this code, or approved by the authority having jurisdiction.

8-904.1.1 The provisions of these regulations shall apply to the acceptance, location, installation, alteration, repair, relocation, replacement or addition of any electrical system or portion thereof, the premise wiring, or equipment fixed in place as related to restoration within or attached to a qualified historical building.

8-904.1.2 Existing systems, wiring methods and electrical equipment which do not, in the opinion of the enforcing agency, constitute a safety hazard may remain in use.

8-904.1.3 The enforcing agency may approve any alternative to these regulations which achieves equivalent safety.

8-904.1.4 Archaic methods that do not appear in present codes may remain and may be extended if, in the opinion of the enforcing agency, they constitute a safe installation.

8-904.2 Wiring Methods.

8-904.2.1 Where existing branch circuits do not include an equipment grounding conductor and, in the opinion of the enforcing agency, it is impracticable to connect an equipment grounding
conductor to the grounding electrode system, receptacle convenience outlets may remain the nongrounding type.

8-904.2.2 Ground fault circuit interrupter (GFCI) protected receptacles shall be installed where replacements are made at receptacle outlets that are required to be so protected by the regular code in effect at the time of replacement. Metallic face plates shall either be grounded to the grounded metal outlet box or be grounded to the grounding-type device when used with devices supplied by branch circuits without equipment grounding conductors.

8-904.2.3 Grounding-type receptacles shall not be used without a grounding means in an existing receptacle outlet unless GFCI protected. Existing non grounding receptacles shall be permitted to be replaced with non grounding or grounding-type receptacles where supplied through a ground fault circuit interrupter.

8-904.2.4 Extensions of existing branch circuits without equipment-grounding conductors shall be permitted to supply grounding-type devices only when the equipment grounding conductor of the new extension is grounded to any accessible point on the grounding electrode system.

8-904.2.5 Receptacle outlet spacing and other related distance requirements shall be waived or modified if determined to be impracticable by the enforcing agency.

8-904.2.6 For the replacement of lighting fixtures on an existing non grounded lighting outlet, or when extending an existing non grounding lighting outlet, the following shall apply:

1. The exposed conductive parts of lighting fixtures shall be connected to any acceptable point on the grounding electrode system, or

2. The lighting fixtures shall be made of insulating material and shall have no exposed conductive parts.

EXCEPTION: Lighting fixtures mounted on electrically nonconductive ceilings or walls where located not less than either 8 feet (2438 mm) vertically or 5 feet (1524 mm) horizontally from grounded surfaces.

8-904.2.7 Lighting load calculations for services and feeders may be based on actual loads as installed in lieu of the .watts per square foot. method.

8-904.2.8 Determination of existing loads may be based on maximum demand recordings in lieu of calculations provided all of the following are met:

1. Recordings are provided by the serving agency.

2. The maximum demand data is available for a one-year period.

EXCEPTION: If maximum demand data for a one-year period is not available, the maximum demand data shall be permitted to be based on the actual amperes continuously recorded over a minimum 30-day period by a recording ammeter connected to the highest loaded phase of the feeder or service. The recording should reflect the maximum demand when the building or space is occupied and include the measured or calculated load at the peak time of the year, including the larger of the heating or cooling equipment load.

3. There has been no change in occupancy or character of load during the previous 12 months.

4. The anticipated load will not change, or the existing demand load at 125 percent plus the new load does not exceed the ampacity of the feeder or rating of the service.

Chapter 8-10
HISTORIC DISTRICTS, SITES AND OPEN SPACES

SECTION 8-1001 – PURPOSE, SCOPE AND APPLICABILITY

8-1001.1 Purpose. It is the purpose of this chapter to permit alternative regulations and criteria to govern the impact of development or redevelopment on sites, open space, accessway, artifacts and landscaped areas coinciding with the rehabilitation, preservation, restoration, relocation or reconstruction of designated qualified historical buildings or properties.

8-1001.2 Scope. The range of forms and physical features to which alternative design standards and regulations may be applied include, but are not limited to, natural open space, including earth, rock, water and vegetation; landscaping, gardens and plant materials; landscape features, including walls, fences, trellises, yard lights, pools, lawn and garden ornamentations and the like; patios, courts, malls, play areas, shelters and promenades; pedestrian and vehicular access, including paths, sidewalks, driveways, parking spaces, service delivery, trash and garbage disposal areas; grading, topography and erosion control; and public utilities.

8-1001.3 Applicability. Alternative regulations and criteria shall apply to all sites, open space, accessways, artifacts and landscape areas associated with qualified historic buildings or historic districts.

SECTION 8-1002 – SITE RELATIONS

Insofar as regular regulations, standards and requirements may impact on sites, open space, accessway, artifacts and landscaped areas within historic districts or beyond the qualified historical property proper, those areas and physical features come within the purview of this code. A designated historic building or district may be considered to include the site, open space, accessway and landscaped areas beyond the immediate structure as these elements are an integral part of and significant to the historic structure or district.

The relationship between a structure and its site is important and of special importance in historic districts. Districts consist of a series of buildings that form the urban character of the area and the ties to less-significant structures which support the district. Viewed as a whole, with the spaces between the structures (including streets, sidewalks, landscaping and street furniture) a total identity of place is created.

Chapter 35
UNIFORM BUILDING CODE STANDARDS

SECTION 3504 – RECOGNIZED STANDARDS

3504.1.3 [For SFM] National Standards.

1. *NFPA 11, 1998 Edition, Low-Expansion Foams.*

2. *NFPA 11A, 1999 Edition, Medium- and High-Expansion Foam Systems.*

3. *NFPA 12, 1998 Edition, Carbon Dioxide Extinguishing Systems.*

4. *NFPA 12A, 1997 Edition, Halon 1301 Fire Extinguishing Systems.*

5. *NFPA 13, 1999 Edition, The Installation of Automatic Sprinkler Systems, as amended.*

6. *NFPA 13D, 1999 Edition, Installation of Sprinkler Systems in One-and Two-Family Dwellings and Manufactured Homes.*

7. *NFPA 13R, 1999 Edition, Installation of Sprinkler Systems in Residential Occupancies up to and Including Four Stories in Height.*

8. *NFPA 14, 2000 Edition, Installation of Standpipe, Private Hydrant and Hose Systems.*

9. *NFPA 15, 1996 Edition, Water Spray Fixed Systems for Fire Protection.*

10. *NFPA 16, 1999 Edition, Installation of Deluge, Foam-Water Sprinkler and Foam-Water Spray Systems.*

11. *NFPA 17, 1998 Edition, Dry Chemical Extinguishing Systems.*

12. *NFPA 17A, 1998 Edition, Wet Chemical Extinguishing Systems.*

13. *NFPA 20, 1999 Edition, Installation of Stationary Pumps for Fire Protection.*

14. *NFPA 22, 1998 Edition, Water Tanks for Private Fire Protection.*

15. *NFPA 24, 1995 Edition, Installation of Private Fire Service Mains and Their Appurtenances.*

16. *NFPA 37, 1998 Edition, Installation and Use of Stationary Combustion Engines and Gas Turbines.*

17. *NFPA 50, 1996 Edition, Bulk Oxygen Systems at Consumer Sites.*

18. *NFPA 54, 1996 Edition, National Fuel Gas Code.*

19. *NFPA 58, 1998 Edition, Standard for the Storage and Handling of Liquefied Petroleum Gases.*

20. *NFPA 72, 1999 Edition, National Fire Alarm Code, as amended. [The SFM does not adopt NFPA 72* r*, 1999 Edition, Chapter 8.]*

20.1 *NFPA 72* r*, 1999 Edition, National Fire Alarm, as amended, .Household Fire Warning Equipment.*

21. *NFPA 92 A, 2000 Edition, Smoke-Control Systems.*

22. *NFPA 99, 1999 Edition, Health Care Facilities, Chapter 4, Gas and Vacuum Systems.*

23. *NFPA 99 C, 1999 Edition, Gas and Vacuum Systems.*

24. *NFPA 253, 2000 Edition, Test for Critical Radiant Flux of Floor Covering Systems Using a Radiant Heat Energy Source.*

25. *NFPA 2001, 2000 Edition, Clean Agent Fire Extinguishing Systems.*

26. *UL13, Power-limited Circuit Cables, Second Edition, 1996.*

27. *UL 38, Manually Actuated Signaling Boxes, Seventh Edition, March 26, 1999, with revisions through April 28, 2000.*

28. *UL 193, Alarm Valves for Fire-Protection Service, Ninth Edition, March 24, 1993.*

29. *UL 217, Single- and Multiple-Station Smoke Alarm, as amended, Fifth Edition, 1997.*

30. *UL 228, Door Closers/Holders, with or without Integral Smoke Alarms, Fourth Edition, April 29, 1997, with revisions through January 21, 1999.*

31. *UL 260, Dry Pipe and Deluge Valves for Fire Protection Service, Sixth Edition, May 27, 1994, with revisions through February 15, 1999.*

32. *UL 262, Gate Valves for Fire Protection Service, Seventh Edition, May 27, 1994, with revisions through January 28, 1998.*

33. *UL 268, Smoke Detectors for Fire Protective Signaling Systems, as amended, Fourth Edition, December 30, 1996, with revisions through January 4, 1999.*

34. *UL 268A, Smoke Detectors for Duct Application, as amended, Third Edition, May 15, 1998.*

35. *UL 312, Check Valves for Fire-Protection Service, Eighth Edition, June 2, 1993, with revisions through February 17, 1994.*

36. *UL 346, Waterflow Indicators for Fire Protective Signaling Systems, Fourth Edition, 1994.*

37. *UL 464, Audible Signal Appliances, Seventh Edition, February 23, 1996, with revisions through May 11, 1999.*

38. *UL 497B, Protectors for Data Communication and Fire Alarm Circuits, Second Edition, December 28, 1993, with revisions through October 20, 1994.*

39. *UL 521, Heat Detectors for Fire Protective Signaling Systems, Seventh Edition, February 19, 1999.*

40. *UL 539, Single- and Multiple-Station Heat Detectors, Fourth Edition, 1995.*

41. *UL 632, Electrically Actuated Transmitters, Sixth Edition, 1994.*

42. *UL 753, Alarm Accessories for Automatic Water Supply Valves for Fire Protection Service, Sixth Edition, 1994.*

43. *UL 813, Commercial Audio Equipment, Seventh Edition, December 13, 1996, with revisions through March 30, 1999.*

44. *UL 864, Control Units for Fire Protective Signaling Systems, as amended, Eighth Edition, November 27, 1996, with revisions through March 30, 1999.*
45. *UL 884, Underfloor Electric Raceways and Fittings, Eighth Edition, 1987, Tenth Edition, 1998.*

46. *UL 913, Intrinsically Safe Apparatus for Use in Class I, II, and III, Division 1, Hazardous Locations, Fifth Edition, February 21, 1997, with revisions dated February 24, 1997.*

47. *UL 924, Emergency Lighting and Power Equipment, Eighth Edition, 1999.*

48. *UL 985, Household Fire Warning System Units, as amended, Fifth Edition, May 26, 2000.*

49. *UL 1091, Butterfly Valves for Fire Protection Service, Fifth Edition, 1994.*

50. *UL 1424, Cables for Power-limited Fire Protective Signaling Circuits, Second Edition, 1996.*

51. *UL 1480, Speakers for Fire Protective Signaling Systems, Fourth Edition, July 28, 1998.*

52. *UL 1481, Power Supplies for Fire Protective Signaling Systems, Fourth Edition, April 9, 1999.*

53. *UL 1711, Amplifiers for Fire Protective Signaling Systems, First Edition, January 5, 1987, with revisions through October 12, 1992.*

54. *UL 1730, Smoke Detector Monitors and Accessories (annunciators) for Individual Living Units of Multifamily Residences and Hotel/Motel Rooms, Third Edition, September 18, 1998, with revisions through May 17, 1999.*

55. *UL 1971, Signaling Devices for the Hearing Impaired, Second Edition, October 17, 1995, with revisions through May 24, 2000.*

56. *UL 1484, Residential Gas Detectors, Third Edition, November 30, 1994, with revisions dated December 1, 1994.*

57. *UL 1994, Low Level Path Marking and Lighting Systems, Sixth Edition, 1994.*

58. *UL 2034, Single and Multiple Station Carbon Monoxide Alarms, Second Edition, October 29, 1996, with revisions through June 2, 1999.*

59 *UL 2079, Tests for Fire Resistance of Building Joint Systems, Third Edition, July 31, 1998.*

60. *FM Class No. 3260, Flame Radiation Detectors for Automatic Fire Alarm Signaling, February 1994 Edition.*

3504.2 [For DSA/AC] Division of the State Architect, Access Compliance Standards

3504.2.1 American National Standards Institute (ANSI) 17.1-86.

NOTES:
1. *DSA/AC adopts ANSI 17.1-86 by reference for the specific scope of application for which DSA/AC is responsible for enforcement, and the specific statutory authority of DSA/AC to adopt and enforce such provisions of building standards per 101.17.11.*

2. *The Division of the State Architect, Access Compliance Standards referencing ANSI 17.1-86 are also referenced in Title 24, Part 12.*

3504.2.2 American Society of Mechanical Engineers (ASME 17.1-90).

NOTES:
1. *DSA/AC adopts ASME 17.1-90 by reference for the specific scope of application for which DSA/AC is responsible for enforcement, and the specific statutory authority of DSA/AC to adopt and enforce such provisions of building standards per 101.17.11.*

2. *The Division of the State Architect, Access Compliance Standards referencing ASME 17.1-90 are also referenced in Title 24, Part 12.*

SECTION 3505 – AMENDMENTS TO NATIONAL STANDARDS

3505.1 [For DSA/AC, SFM] NFPA 72, 1999 Edition as amended.

Add a definition of "central control station" as follows:

CENTRAL CONTROL STATION *is a central control station for fire department operations as referred to in the California Building Code and California Fire Code. (See also FIRE COMMAND CENTER.)*

Add a subsection 1-5.2.6 as follows:

Sec. 1-5.2.6. Secondary Supply Capacity and Sources. *The secondary supply shall automatically supply the energy to the system within 30 seconds, and without loss of signals, wherever the primary supply is incapable of providing the minimum voltage required for proper operation. The secondary (standby) power supply shall supply energy to the system in the event of total failure of the primary (main) power supply or when the primary voltage drops to a level insufficient to maintain functionality of the control equipment and system components. Under maximum quiescent load (system functioning in a non-alarm condition), the secondary supply shall have sufficient capacity to operate a protected premises, central station, or proprietary system for 24 hours, or an auxiliary or remote station system for 60 hours; and, at the end of that period, shall be capable of operating all alarm notification appliances used for evacuation or to direct aid to the location of an emergency for 5 minutes. The secondary power supply for emergency voice/alarm communications service shall be capable of operating the system under maximum quiescent load for 24 hours and then shall be capable of operating the system during a fire or other emergency condition for a period of 2 hours. Fifteen minutes of evacuation alarm operation at maximum connected load shall be considered the equivalent of 2 hours of emergency operation.*

For a combination system, the secondary supply capacity required above shall include the load of any non-fire related equipment, functions or features.

The secondary supply shall consist of one of the following:

(a) *A storage battery arranged in accordance with 1-5.2.9.*

(b) *An automatic starting, engine-driven generator arranged in accordance with 1-5.2.10 and storage batteries with 4 hours of capacity under maximum normal load followed by 5 minutes of alarm/emergency capacity arranged in accordance with 1-5.2.9.*

(c) *Multiple engine-driven generators, one of which is arranged for automatic starting, arranged in accordance with 1-5.2.10, and capable of supplying the energy required herein, with the largest generator out of service. The second generator shall be permitted to be started by pushbutton.*

Operation on secondary power shall not affect the required performance of a fire alarm system. The system shall produce the same alarm, supervisory, and trouble signals and indications (excluding the ac power indicator) when operating from the standby power source as are produced when the unit is operating from the primary power source.

Amend Section 1.5.5.4, as follows:

Sec. 1.5.5.4. Wiring. *The installation of all wiring, cable and equipment shall be in accordance with the California Electrical Code, and specifically with Article 760, Article 770 and Article 800, where applicable. Optical Fiber Cables shall be protected against mechanical injury in accordance with Article 760.*

Add a subsection 1-7.2.2 as follows:

(b) *Record drawings; and*

(c) *Written operating instructions shall be provided at a location approved by the enforcing agency.*

Add a Section 1-5.4.7.1 as follows:

Sec. 1-5.4.7.1. Supplementary Audible Notification Appliances. *Every public, private or parochial school building having an occupant load of fifty (50) or more students or more than one classroom shall sound the California uniform fire alarm signal as described in Education Code Sections 32002, 32003 and 32004.*

EXCEPTION: *When a fire alarm system having a distinctive tone, and which is used for no other purpose, is installed, the manner of sounding such alarm shall not be subject to the provisions of Education Code Sections 32002, 32003 and 32004.*

Add a Section 1-5.4.8 as follows:

Sec. 1-5.4.8 Alarm Signal Deactivation. *A means for turning off activated alarm notification appliances shall be permitted only where it is key-operated, located within a locked cabinet, or arranged to provide equivalent protection against unauthorized use. Such means shall be permitted only if a visible zone alarm indication or the equivalent has been provided as specified in 1-5.7.1, and subsequent actuation of initiating devices on other initiating device circuits or subsequent actuation of addressable initiating devices on signaling line circuits cause the notification appliances to reactivate. A means that is left in the "off" position when there is no alarm shall operate an audible trouble signal until the means is restored to normal.*

EXCEPTION: *If permitted by the authority having jurisdiction, subsequent actuation of another addressable initiating device of the same type in the same room or space shall not be required to cause the notification appliance(s) to reactivate.*

Amend existing Section 1-5.7.1.2 as follows:

Sec. 1-5.7.1.2. Zone of Origin. *Fire alarm systems serving two or more zones shall identify the zone of origin of the alarm initiation by annunciation or coded signal as required by the authority having jurisdiction.*

Add a Section 1-6.2.2 as follows:

Sec. 1-6.2.2. *Every system shall include the following documentation, which shall be delivered to the owner or the owner's representative upon final acceptance of the system:*

(1) **An owner's manual and installation instructions covering all system equipment*

(2) *Record drawings*

(3) *The owner's manual and the record drawings shall be provided at a location approved by the authority having jurisdiction.*

2-1 Introduction.

2-1.1* Scope. *This chapter contains minimum requirements for the selection, installation, operation and maintenance of fire warning equipment for use within family living units. The requirements of the other chapters shall not apply.*

EXCEPTION: *Where specifically indicated.*

2-1.2 Purpose.

2-1.2.1 *Household fire warning systems shall be designed and installed to provide sufficient warning of a fire to enable occupants to escape. It is recognized that household fire warning systems might not be of material assistance to all occupants, such as persons intimate with the ignition of a fire.*

2-1.2.2 *This chapter is primarily concerned with life safety, not with protection of property. It presumes that a family has an exit plan.*

2-1.3 General.

2-1.3.1 *A control and associated equipment, a multiple of single station alarm(s), or any combination thereof shall be permitted to be used as a household fire warning system, provided the requirements of 2-1.3.7 are met.*

2-1.3.2 *Detection and alarm systems for use within the protected household are covered by this chapter.*

2-1.3.3 *Supplementary functions, including the extension of an alarm beyond the household, shall be permitted and shall not interfere with the performance requirements of this chapter.*

2-1.3.4 *Where the authority having jurisdiction requires a household fire warning system to comply with the requirements of Chapter 4 or any other chapters of this code, the requirements of Section 2-2 shall still apply.*

2-1.3.5 *The definitions of Section 1-4 shall apply.*

2-1.3.6 *This chapter does not exclude the use of fire alarm systems complying with other chapters of this code in household applications, provided all of the requirements of this chapter are met or exceeded.*

2- 1.3.7 *All devices, combinations of devices and equipment to be installed in conformity with this chapter shall be approved or listed for the purposes for which they are intended.*

2-1.3.8 *A device or system of devices having materials or forms that differ from those detailed in this chapter shall be permitted to be examined and tested according to the intent of the chapter and, if found equivalent, shall be permitted to be approved.*

2-1.3.9 Equivalency. *Nothing in this code is intended to prevent the use of systems, methods, or devices of equivalent or superior quality, strength, fire resistance, effectiveness, durability and safety over those prescribed by this code, provided technical documentation is submitted to the authority having jurisdiction to demonstrate equivalency and the system, method or device is approved for the intended purpose.*

2-2 Basic Requirements.

2-2.1 Required Protection.

2-2.1.1* *This code requires the following detectors within the family living unit.*

2-2.1.1.1 *Smoke alarms shall be installed outside of each separate sleeping area in the immediate vicinity of the bedrooms and on each additional story of the family living unit, including basements and excluding crawl spaces and unfinished attics. In new construction, a smoke alarm also shall be installed in each sleeping room.*

2-2.1.1.2* *For family living units with one or more split levels (i.e., adjacent levels with less than one full story separation between levels), a smoke alarm required by 2-2.1.1.1 shall be permitted for an adjacent lower level, including basements. (See Figure A-2-2.1.1.2.)*

> ***EXCEPTION:*** *Where there is an intervening door between one level and the adjacent level, a smoke alarm shall be installed on the lower level.*

2-2.1.1.3 *Automatic sprinkler systems provided in accordance with NFPA 13D, Standard for the Installation of Sprinkler Systems in One- and Two-Family Dwellings and Manufactured Homes, or NFPA 13R, Standard for the Installation of Sprinkler Systems in Residential Occupancies up to and Including Four Stories in Height, shall be interconnected to sound alarm notification appliances throughout the dwelling where a fire warning system is provided.*

2-2.2* Alarm Notification Appliances. *Each automatic alarm initiating device shall cause the operation of an alarm that shall be clearly audible in all bedrooms over background noise levels with all intervening doors closed. The tests of audibility level shall be conducted with all household equipment that might be in operation at night in full operation.*

Examples of such equipment are window air conditioners and room humidifiers. (See A-2-2.2 for additional information.)

2-2.2.1 *In new construction, where more than one smoke alarm is required by 2-2.1, smoke alarm shall be arranged so that operation of any smoke alarm causes all smoke alarms within the dwelling to sound.*

> ***EXCEPTION:*** *Configurations that provide equivalent distribution of the alarm signal.*

2-2.2.2* Standard Signal. *Newly installed alarm notification appliances used with a household fire warning system and single and multiple station smoke alarms shall produce the audible emergency evacuation signal described in ANSI S3.41, Audible Emergency Evacuation Signal. Signals from different notification appliances shall not be required to be synchronized.*

2-2.3 Alarm Notification Appliances for the Hearing Impaired. *In a household occupied by one or more hearing impaired persons, each initiating device shall cause the operation of a visible alarm signal(s) in accordance with 2-4.4.2. Since hearing deficits are often not apparent, the responsibility for advising the appropriate persons shall be that of the hearing impaired party. The responsibility for compliance shall be that of the occupants of the family living unit.*

EXCEPTION: *A listed tactile signal shall be permitted to be employed.*

2-3 Power Supplies.

2-3.1 General.

2-3.1.1 *All power supplies shall have sufficient capacity to operate the alarm signal(s) for at least 4 continuous minutes.*

2-3.1.2 *There shall be a primary (main) and a secondary (stand-by) power source. For electrically powered household fire warning equipment, the primary (main) power source shall be ac; the secondary (standby) power source shall be a battery.*

EXCEPTIONS:

1. *Where the primary (main) power source is an emergency circuit or a legally required standby circuit capable of operating the system for at least 24 hours in the normal condition, followed by not less than 4 minutes of alarm, a secondary (standby) source shall not be required.*

2. *Where the primary (main) power source is a circuit of an optional standby system capable of operating the system for at least 24 hours, followed by not less than 4 minutes of alarm, that meets the requirements for either an emergency system or a legally required standby system as defined in NFPA 70, National Electrical Code, Articles 700 and 701, respectively, a secondary (standby) supply shall not be required.*

3. *Detectors and alarms powered from a monitored dc circuit of a control unit where power for the control unit meets the requirements of Section 2-3 and the circuit remains operable upon loss of primary (main) ac power.*

4. *A detector and a wireless transmitter that serves only that detector shall be permitted to be powered from a monitored battery primary (main) source where part of a listed, monitored low power radio (wireless) system. A secondary (standby) source shall not be required.*

5. *In existing construction, either an ac primary power source, as described in 2-3.2, or a monitored battery primary (main) power source, as described in 2-3.3, shall be permitted. A secondary (stand-by) source shall not be required.*

6. *Visible notification appliances required by 2-4.4.2.*

7. *Where the primary (main) power source is non-electrical, a secondary (standby) source shall not be required. The requirements of 2-3.5 shall apply.*

2-3.2 Primary Power Supply--AC.

2-3.2.1 *An ac primary (main) power source shall be a dependable commercial light and power supply source. A visible "power on" indicator shall be provided.*

2-3.2.2 *All electrical systems designed to be installed by other than a qualified electrician shall be powered from a source not in excess of 30 volts that meets the requirements for power limited fire alarm circuits as defined in NFPA 70, National Electrical Code, Article 760.*

2-3.2.3 *A restraining means shall be used at the plug-in of any cord-connected installation.*

2-3.2.4 *AC primary (main) power shall be supplied either from a dedicated branch circuit or the unswitched portion of a branch circuit also used for power and lighting. Operation of a switch (other than a circuit breaker) or a ground-fault circuit-interrupter shall not cause loss of primary (main) power.*

EXCEPTIONS:

1. Single or multiple station alarms with a supervised rechargeable standby battery that provides at least 4 months of operation with a fully charged battery.

2. Where a ground-fault circuit-interrupter serves all electrical circuits within the household.

2-3.2.5 *Neither loss nor restoration of primary (main) power shall cause an alarm signal.*

EXCEPTION: *An alarm signal shall be permitted within the house-hold but shall not exceed 2 seconds.*

2-3.2.6 *Where a secondary (standby) battery is provided, the primary (main) power supply shall be of sufficient capacity to operate the system under all conditions of loading with any secondary (standby) battery disconnected or fully discharged.*

2-3.3 Primary Power Supply.Monitored Battery. *Household fire warning equipment shall be permitted to be powered by a battery, provided that the battery is monitored to ensure that the following conditions are met:*

(a) *All power requirements are met for at least 1 year of battery life, including monthly testing.*

(b) *A distinctive audible trouble signal sounds before the battery is incapable of operating (from causes such as aging or terminal corrosion) the device(s) for alarm purposes.*

(c) *For a unit employing a lock-in alarm feature, automatic transfer is provided from alarm to a trouble condition.*

(d) *The unit is capable of producing an alarm signal for at least 4 minutes at the battery voltage at which a trouble signal is normally obtained, followed by not less than 7 days of trouble signal operation.*

(e) *The audible trouble signal is produced at least once every minute for 7 consecutive days.*

(f) *Acceptable replacement batteries are clearly identified by the manufacturer's name and model number on the unit near the battery compartment.*

(g) *A readily noticeable, visible indication is displayed when a primary battery is removed from the unit.*

(h) *Any unit that uses a nonrechargeable battery as a primary power supply that is capable of a 10-year or greater service life, including testing, and meets the requirements of 2-3.3 (b) through (e) shall not be required to have a replaceable battery.*

2-3.4 Secondary (Standby) Power Supply.

2-3.4.1 *Removal or disconnection of a battery used as a secondary (standby) power source shall cause a distinctive audible or visible trouble signal.*

2-3.4.2 *Acceptable replacement batteries shall be clearly identified by manufacturer's name and model number on the unit near the battery compartment.*

2-3.4.3 *Where required by law for disposal reasons, rechargeable batteries shall be removable.*

2-3.4.4 Automatic Recharging.

2-3.4.4.1 *Automatic recharging shall be provided where a rechargeable battery is used as the secondary (standby) supply. The supply shall be capable of operating the system for at least 24 hours in the normal condition, followed by not less than 4 minutes of alarm. Loss of the secondary (standby) source shall sound an audible trouble signal at least once every minute.*

2-3.4.4.2 *The battery shall be recharged within 4 hours where power is provided from a circuit that can be switched on or off by means other than a circuit breaker, or within 48 hours where power is provided from a circuit that cannot be switched on or off by means other than a circuit breaker.*

2-3.4.5 *Where automatic recharging is not provided, the battery shall be monitored to ensure that the following conditions are met:*

(a) *All power requirements are met for at least 1 year of battery life.*

(b) *A distinctive audible trouble signal sounds before the battery capacity has been depleted below the level required to produce an alarm signal for 4 minutes.*

2-3.5 Primary Power.Nonelectrical. *A suitable spring-wound mechanism shall provide power for the nonelectrical portion of a listed signal station alarm. A visible indication shall be provided to show that sufficient operating power is not available.*

2-4 Equipment Performance.

2-4.1 General. *The failure of any nonreliable or short-life component that renders the detector inoperable shall be readily apparent to the occupant of the living unit without the need for test.*

2-4.2 Smoke Alarms and Smoke Detectors. *Each smoke alarm and smoke detector shall detect abnormal quantities of smoke that can occur in a dwelling, shall properly operate in the normal environmental conditions of a household and shall be in compliance with ANS/UL 268, Standard for Safety Smoke Detectors for Fire Protective Signaling Systems, or ANS/UL 217, Standard for Safety Single and Multiple Station Smoke Alarms.*

2-4.2.1 *The alarm verification feature shall not be used for household fire warning equipment.*

2-4.3* Heat Alarms and Heat Detectors.

2- 4.3.1 *Each heat detector, including a heat detector integrally mounted on a smoke detector, shall detect abnormally high temperature or rate-of-temperature rise, and all such detectors shall be listed for not less than 50-ft (15-m) spacing.*

2-4.3.2 *Fixed temperature detectors shall have a temperature rating at least 25^0 F (13^0 C) above the normal ambient temperature and shall not be rated 50^0 F (28^0 C) higher than the maximum anticipated ambient temperature in the room or space where installed.*

2-4.4 Alarm Signaling Intensity.

2-4.4.1 *All alarm-sounding appliances shall have a minimum rating of 85 dBA at 10 ft (3 m).*

> ***EXCEPTION:*** *An additional sounding appliance intended for use in the same room as the user, such as a bedroom, may have a sound pressure level as low as 75 dBA at 10 ft (3 m).*

2-4.4.2 *Visible notification appliances used in rooms where a hearing impaired person(s) sleeps shall have a minimum rating of 177 candela for a maximum room size of 14 ft by 16 ft (4.27 m by 4.88 m). For larger rooms, the visible notification appliance shall be located within 16 ft (4.88 m) of the pillow. Visible notification appliances in other areas shall have a minimum rating of 15 candela.*

> ***EXCEPTION:*** *Where a visible notification appliance in a sleeping room is mounted more than 24 in. (610 mm) below the ceiling, a minimum rating of110 candela shall be permitted.*

2-4.5 Control Equipment.

2-4.5.1 *The control equipment shall be automatically restoring upon restoration of electrical power.*

2-4.5.2 *The control equipment shall be of a type that "locks in" on an alarm condition. Smoke detection circuits shall not be required to lock in.*

2-4.5.3 *If a reset switch is provided, it shall be of a self-restoring type.*

2-4.5.4 *An alarm-silencing switch or an audible trouble-silencing switch shall not be required to be provided.*

> ***EXCEPTION:*** *Where the switch's silenced position is indicated by a readily apparent signal.*

2-4.5.5 *Each electrical fire warning system and each single station smoke detector shall have an integral test means to allow the householder to check the system and the sensitivity of the detector(s).*

2-4.6 Monitoring Integrity of Installation Conductors. *All means of interconnecting initiating devices or notification appliances shall be monitored for the integrity of the interconnecting pathways up to the connections to the device or appliance so that the occurrence of a single open or single ground fault, which prevents normal operation of the system, is indicated by a distinctive trouble signal.*

EXCEPTIONS:
1. *Conductors connecting multiple station alarms, provided a single fault on the wiring cannot prevent single station operation of any of the interconnected detectors.*

2. *Circuits extending from single or multiple station alarms to required remote notification appliances, provided operation of the test feature on any detector causes all connected appliances to activate.*

2-4.7 Combination System.

2-4.7.1 *Where common wiring is employed for a combination system, the equipment for other than the fire warning signaling system shall be connected to the common wiring of the system so that short circuits, open circuits, grounds, or any fault in this equipment or interconnection between this equipment and the fire warning system wiring does not interfere with the supervision of the fire warning system or prevent alarm or trouble signal operation.*

2-4.7.2 *In a fire-burglar system, the operation shall be as follows:*

(a) *A fire alarm signal shall take precedence or be clearly recognizable over any other signal even when the non-fire alarm signal is initiated first.*

(b) *Distinctive alarm signals shall be used so that fire alarms can be distinguished from other functions such as burglar alarms. The use of a common sounding appliance for fire and burglar alarms shall be permitted where distinctive signals are used. (See 2-2.2.2.)*

2-4.8 Low Power Wireless Systems. *Household fire warning systems utilizing low power wireless transmission of signals within the protected household shall comply with the requirements of Section 3-13.*

EXCEPTION: *Paragraph 3-13.4.5 shall not apply.*

2-4.9 Supervising Station Systems.

2-4.9.1 *Any communications method described in Section 4-5 shall be permitted for transmission of signals from household fire warning equipment to a supervising station. All of the provisions of Section 4-5 shall apply, as appropriate.*

EXCEPTIONS:
1. *Only one telephone line shall be required for one- and two-family residences.*

2. *Each DACT shall be required to be programmed to call a single DACR number only.*

3. *Each DACT serving a one- or two-family residence shall transmit a test signal to its associated receiver at least monthly.*

2-4.9.2* *On receipt of an alarm signal from household fire warning equipment, the supervising station shall immediately (within 90 seconds) retransmit the alarm to the public fire communications center.*

EXCEPTION: *The supervising station shall be permitted to contact the residence for verification of an alarm condition and, where acceptable assurance is provided within 90 seconds that the fire service is not needed, retransmission of an alarm to the public service fire communications center shall not be required.*

2-5 Installation.

2-5.1 General.

2-5.1.1 General Provisions.

2-5.1.1.1* *All equipment shall be installed in a workmanlike manner.*

2-5.1.1.2 *All devices shall be so located and mounted that accidental operation is not caused by jarring or vibration.*

2-5.1.1.3 *All installed household fire warning equipment shall be mounted so as to be supported independently of its attachment to wires.*

2-5.1.1.4 *All equipment shall be restored to normal as promptly as possible after each alarm or test.*

2-5.1.1.5 *The supplier or installing contractor shall provide the owner with:*

(a) *An instruction booklet illustrating typical installation layouts.*

(b) *Instruction charts describing the operation, method and frequency of testing, and proper maintenance of household fire warning equipment.*

(c) *Printed information for establishing a household emergency evacuation plan.*

(d) *Printed information to inform owners where they can obtain repair or replacement service, and where and how parts requiring regular replacement (such as batteries or bulbs) can be obtained within 2 weeks.*

2-5.1.2 Interconnection of Detectors or Multiple Station Alarms.

(a) *Where the interconnected wiring is unsupervised, no more than 18 multiple station alarms shall be interconnected in a multiple station configuration.*

(b) *Where the interconnecting wiring is supervised, the number of interconnected detectors shall be limited to 64.*

2-5.1.2.1 *Interconnection that causes other alarms to sound shall be limited to an individual family living unit. Remote annunciation from single or multiple station alarms shall be permitted.*

2-5.1.2.2 *No more than 12 smoke alarms shall be interconnected in a multiple station connection. The remainder of the alarms shall be permitted to be of other types.*

2-5.2* Alarm and Detector Location and Spacing.

2-5.2.1 Smoke Alarms and Smoke Detectors.

2-5.2.1.1 *Smoke alarms and smoke detectors in rooms with ceiling slopes greater than 1 ft in 8 ft (1m in 8 m) horizontally shall be located at the high side of the room.*

2-5.2.1.2 *Smoke alarms and smoke detectors installed in a stairwell shall be so located as to ensure that smoke rising in the stairwell cannot be prevented from reaching the detector by an intervening door or obstruction.*

2-5.2.1.3 *Smoke alarms and smoke detectors installed to detect a fire in the basement shall be located in close proximity to the stairway leading to the floor above.*

2-5.2.1.4 *Smoke alarms and smoke detectors installed to comply with 2-2.1.1.1 on a story without a separate sleeping area shall be located in close proximity to the stairway leading to the floor above.*

2-5.2.1.5 *Smoke alarms and smoke detectors shall be mounted on the ceiling at least 4 in (102 mm) from a wall or on a wall with the top of the detector not less than 4 in. (102 mm) nor more than 12 in. (305 mm) below the ceiling.*

EXCEPTION: *Where the mounting surface might become considerably warmer or cooler than the room, such as a poorly insulated ceiling below an unfinished attic or an exterior wall, the detectors shall be mounted on an inside wall.*

2-5.2.1.6 *Smoke alarms and smoke detectors shall not be located within kitchens or garages, or in other spaces where temperatures can fall below 40^0 F (4^0 C) or exceed 100^0 F (38^0 C). Smoke detectors shall not be located closer than 3 ft (0.9 m) horizontally from:*

(a) *The door to a kitchen.*

(b) *The door to a bathroom containing a tub or shower.*

(c) *The supply registers of a forced air heating or cooling system, and outside of the airflow from those registers.*

EXCEPTION: *Detectors specifically listed for the application.*

2-5.2.2* Heat Detectors Heat Alarms.

2-5.2.2.1 *On smooth ceilings, heat detectors shall be installed within the strict limitations of their listed spacing.*

2-5.2.2.2 *For sloped ceilings having a rise greater than 1 ft in 8 ft (1 m in 8 m) horizontally, the detector shall be located on or near the ceiling at or within 3 ft (0.9m) of the peak. The spacing of additional detectors, if any, shall be based on a horizontal distance measurement, not on a measurement along the slope of the ceiling.*

2-5.2.2.3* *Heat detectors and heat alarms shall be mounted on the ceiling at least 4 in. (102 mm) from a wall or on a wall with the top of the detector not less than 4 in. (102 mm) nor more than 12 in. (305 mm) below the ceiling.*

EXCEPTION: *Where the mounting surface might become considerably warmer or cooler than the room, such as a poorly insulated ceiling below an unfinished attic or an exterior wall, the detectors shall be mounted on an inside wall.*

2-5.2.2.4 *In rooms with open joists or beams, all ceiling-mounted detectors shall be located on the bottom of such joists or beams.*

2-5.2.2.5* *Detectors installed on an open-joisted ceiling shall have their smooth ceiling spacing reduced where this spacing is measured at right angles to solid joists; in the case of heat detectors, this spacing shall not exceed 1/2 of the listed spacing.*

2-5.3 Wiring and Equipment. *The installation of wiring and equipment shall be in accordance with the requirements of NFPA 70, National Electrical Code, Article 760.*

2-6 Maintenance and Tests.

2-6.1* Maintenance. *Where batteries are used as a source of energy, they shall be replaced in accordance with the recommendations of the alarm equipment manufacturer.*

EXCEPTION: *Batteries described in 2-3.3 (h).*

2-6.2* Tests.

2-6.2.1 Single and Multiple Station Smoke Alarms. *Homeowners shall inspect and test smoke alarms and all connected appliances in accordance with the manufacturer's instructions at least monthly.*

2-6.2.2 Fire Alarm Systems. *Homeowners shall test systems in accordance with the manufacturer's instructions and shall have every household fire alarm system having a control panel tested by a qualified service technician at least every 3 years. This test shall be conducted according to the methods of Chapter 7.*

2-7 Markings and Instructions. *All household fire warning equipment or systems shall be plainly marked with the following information on the unit:*

(a) *Manufacturer's or listee's name, address and model number;*

(b) *A mark or certification that the unit has been approved or listed by a testing laboratory;*

(c) *Electrical rating (where applicable);*

(d) *Temperature rating (where applicable);*

(e) *Spacing rating (where applicable);*

(f) *Operating instructions;*

(g) *Test instructions.*

(h) *Maintenance instructions;*

(i) *Replacement and service instructions.*

EXCEPTION: *Where space limitations prohibit inclusion of 2-7 (g), (h) and (i), a label or plaque suitable for permanent attachment within the living unit, or a manufacturer's manual, shall be provided with the equipment and referenced on the equipment. In the case of a household fire warning system, the required information shall be prominently displayed at the control panel.*

Add a Section 2-8.1 as follows:

Sec. 2-8.1 *Each manual fire alarm box shall be securely mounted. The operable part of each manual fire alarm box shall be not less than 31/2 ft (1.1 m) and not more than 4 ft (1.22 m) above floor level.*

Add a Section 2-8.2.4 as follows:

Sec. 2-8.2.4* *Additional manual fire alarm boxes shall be provided so that the travel distance to the nearest fire alarm box will not be in excess of 200 ft (61m) measured horizontally on the same floor.*

EXCEPTION: *When individual dwelling units are served by a single exit stairway, additional boxes at other than the ground floor may be omitted.*

Amend Section 3-2.4, Exception 4 (b) as follows:

Exception 4 to (b): Where the installation wiring is enclosed in a 2-hour-rated cable assembly, enclosed in a 2-hour-rated enclosure, other than a stairwell or installation of listed circuit integrity (C.I.) cable, which meets or exceeds a 2-hour fire-resistance rating.

Add a Section 3-4.2.2.2 as follows:

Sec. 3-4.2.2.2* *All styles of Class A circuits using physical conductors (for example, metallic, optical fiber) shall be installed such that the outgoing and return conductors, exiting from and returning to the control unit, respectively, are routed separately. The outgoing and return (redundant) circuit conductors shall not be run in the same cable assembly (that is, multiconductor cable), enclosure or raceway.*

EXCEPTION: *The outgoing and return (redundant) circuit conductors shall be permitted to be run in the same cable assembly, enclosure or raceway under any of the following conditions:*

1. *For a distance not to exceed 10 ft (3 m) where the outgoing and return conductors enter or exit the initiating device, notification appliance or control unit enclosures.*

2. *Where the vertically run conductors are contained in a 2-hour rated cable assembly or enclosed (installed) in a 2-hour rated enclosure or a listed circuit integrity (c.1.) cable, which meets or exceeds a 2-hour fire resistive rating.*

3. *Where looped conduit/raceway systems are provided, single conduit/raceway drops to individual devices or appliances shall be permitted.*

4. *Where looped conduit/raceway systems are provided, single conduit/raceway drops to multiple devices or appliances installed within a single room not exceeding 1000 ft2 (92.9 m2) in area shall be permitted.*

Sec. 4-4.5. Notification Appliances for the Hearing Impaired.

Approved notification appliances for the hearing impaired shall be installed in the following areas:

1. *Restrooms*
2. *Corridors*
3. *Music practice rooms*
4. *Band rooms*
5. *Gymnasiums*
6. *Multipurpose rooms*
7. *Occupational shops*
8. *Occupied rooms where ambient noise impairs hearing of the fire alarm*
9. *Lobbies*
10. *Meeting rooms*
11. *Any other area for common use*

NOTE: *This section is also adopted by the Division of the State Architect, Access Compliance, for buildings not regulated by the State Fire Marshal.*

The SFM does not adopt Chapter 8, of NFPA 72, 1999 edition, Fire Warning Equipment for Dwelling Units.

The SFM will maintain the use of the existing Chapter 2, House-hold Fire Warning Equipment of the 1996 edition of NFPA 72, as amended.

Amend Sections 4-3.2.1 and 4-3.3.1 as follows:

Sec. 4-3.2.1. *Audible notification appliances intended for operation in the public mode shall have a sound level of not less than 75dBA at 10 feet (3048 mm) or more than 110dBA at the minimum hearing distance from the audible appliance.*

Sec. 4-3.3.1. PRIVATE MODE *Audible signals intended for operation in the private mode shall have a sound level of not less than 45dBA at 10 feet (3048 mm) or more than 110dBA at the minimum hearing distance from the audible appliance.*

Add a Section 3-8.3.2.3.1 (b) as follows:

> ***Sec. 3-8.3.2.3.1 (b)*** *A smoke detector continuously subjected to a smoke concentration above alarm threshold does not delay the system within functions of 1-5A by more than 30 seconds.*

Amend Section 3-8.2.3 as follows:

> ***(c)*** *Operation of the patient room smoke detector in Group I, Division 1.1, 1.2 and 2 Occupancies shall not include any alarm verification feature.*

Add a Section 3-8.4.1.3.3.3 (3) c and amend as follows:

> ***Sec. 3-8.4.1.3.3.3 (3) c****. Installation of listed circuit integrity (C.I.) cable, which meets or exceeds a two-hour fire-resistance rating.*
>
> ***Sec. 3-8.4.1.3.5.5.1.*** *Special fire alarm provisions for occupancies having floors used for human occupancy located more than 75 feet (22 860 mm) above the lowest level of the fire department vehicle access, are found in Title 24, Part 2, Chapter 4, of the California Building Code. Those provisions include providing a central control station. The requirements provided for, in a fire command center, may be included within the central control station.*

Amend existing Section 5-8.1.2 by adding an exception as follows:

> ***EXCEPTION:*** *When individual units are served by a single stairway, additional boxes at other than the ground floor may be omitted.*

SECTION 3506 – [FOR DSA/AC] CALIFORNIA STANDARDS

3506.1 [For DSA/AC] California Code of Regulations (CCR).

The CCR is the official compilation, printing and publication of adoption, amendment or repeal of regulations as published by the California Building Standards Commission for Title 24 and the Office of Administrative Law for all other Titles of the CCR.

> ***NOTES:***
> ***1.*** *DSA/AC adopts the CCR by reference for the specific scope of application for which DSA/AC is responsible for enforcement, and the specific statutory authority of DSA/AC to adopt and enforce such provisions of building standards per 101.17.11.*
>
> ***2.*** *The Division of the State Architect-Access Compliance California standards referencing CCR are also referenced in Title 24, Part 12.*

2001
California
Electrical
Code

California Code of Regulations
Title 24, Part 3

Based on 1999 National Electrical Code

Effective
November 1, 2002

ARTICLE 089 – ADMINISTRATION

(Note: Article 089 has no corresponding Article in the NEC.)

089-1. Title. *The provisions contained in this Code shall be known as the "California Electrical Code," a portion of the "California Building Standards Code," as defined in the "California Building Standards Law" commencing with Section 18901 of the Health and Safety Code, and may be cited and referred to as the "California Electrical Code." The unqualified words "This Code" as used herein refer only to the California Electrical Code, and do not include any other portions of the California Building Standards Code. These provisions may also be cited as "C.E.C." or "Part 3" within other parts of the California Building Standards Code (Title 24).*

089-2. Purpose. *The purpose of this Code is to provide minimum standards to safeguard life or limb, health, property and public welfare, and to protect against hazards that may arise from the use of electricity by regulating and controlling the design, construction, installation, quality of materials, location and operation of electrical equipment, wiring and systems.*

089-3. Scope. *The provisions of the Code and the building standards contained herein including those standards adopted by reference without amendments, where specifically adopted by the listed agencies under their cited authority and enforced by the enforcing agency specified in Section 089-8, shall apply to the construction, alteration, moving, demolition, repair and use of all electrical equipment wiring and systems in or on any building or structure or outdoors on any premise or property; except such electrical equipment, wiring and systems which are expressly exempted by Section 089-4.*

089-4. Exempted from this Code. *This Code does not cover:*

(a) *Installations in ships, watercraft other than floating dwelling units, railway rolling stock, aircraft, automotive vehicles, commercial coaches, mobile-homes and recreational vehicles.*

(b) *Installations underground in mines, mine shafts and tunnels.*

(c) *Installations of railways for generation, transformation, transmission, or distribution of power used exclusively for operation of rolling stock or installations used exclusively for signaling and communication purposes.*

(d) *Installation of communication equipment under the exclusive control of communication utilities, located outdoors or in building spaces used exclusively for such installations.*

(e) *Installations under the exclusive control of electrical utilities for the purpose of communication, or metering; or for the generation, control, transformation, transmission, and distribution of electrical energy located in buildings used exclusively by utilities for such purposes or located outdoors on property owned or leased by the utility or on public highways, streets, roads, etc., or outdoors by established rights on private property.*

Exception to (d) and (e): In places of employment, the following shall apply: installations of conductors, equipment and associated enclosures subject to the jurisdiction of the California Public Utilities Commission, that are owned, operated and maintained by an electric, communications, or electric railway utility, but not including conduits, vaults, and other like enclosures containing conductors and equipment of such a utility when located indoors or on premises not used exclusively for utility purposes, but do not apply to the utility's conductors and equipment therein.

(f) *Installations on highways or bridges.*

089-5. Non-Building Standards, Orders and Regulations.

(a) *Requirements contained in the National Electrical Code (NEC), or in any other referenced code, document or standard, which are not building standards as defined in Section 18912 of the Health and Safety Code, shall not be construed as a part of the provisions of this Code.*

(b) *For the applicability of regulations, safety and other orders, and standards which relate to the administration, enforcement, maintenance, operation and similar non-building standards, see other titles of the California Code of Regulations.*

089-6. Order of Precedence and Use.

(a) *In the event of any difference between the provisions of this Code and the National Electrical Code (NEC), or between this Code and the provisions of any other referenced code, document or standard, the text of this Code shall govern. Where a specific provision varies from a general provision, the specific provisions shall apply.*

(b) *If a section of this Code makes a cross-reference to another section or table in the National Electrical Code (NEC), such cross-referencing shall be interpreted to mean that which is shown in the NEC unless the referenced section or table has been amended or modified in this Code for the particular enforcing agency.*

(c) *If a section in the National Electrical Code (NEC) makes a cross-reference to another section or table in the NEC, such cross-referencing shall be interpreted to mean that which is shown in the NEC unless the referenced section or table has been amended or modified in this Code or the particular enforcing agency.*

(d) *When adopted by a State agency, and approved by the Commission, the text of amended provisions contained in this Code shall take precedence over the corresponding provisions of the National Electrical Code (NEC).*

089-7. Application.

5. DSA/AC-Division of the State Architect, Access Compliance.

General. *To assure that barrier-free design is incorporated in all buildings, facilities, site work and other improvements to which this code applies; to assure that these improvements are accessible to and usable by physically disabled persons. Additions, alterations and structural repairs in all buildings and facilities shall comply with these provisions for new buildings, except as otherwise provided and specified here. The provisions of these regulations shall apply to any portable buildings leased or owned by a school district, and shall also apply to temporary and emergency buildings and facilities.*

A. Application-*Publicly-Funded Buildings, Structures, Sidewalks, Curbs and Related Facilities where access for people with physical disabilities is required to areas designated in Part 2 of Title 24.*

Note: *See Government Code, commencing with Section 4450.*

(1) *All buildings, structures, sidewalks, curbs, and related facilities constructed by the use of State, county, or municipal funds, or the funds of any political subdivision of the State.*

(2) *All buildings, structures, and facilities, occupied 50 percent or more, which are leased, rented, contracted, sublet or hired for periods in excess of two years by any municipal county or State division of government or by a special district. The determination as to whether the building, structure, or facility is occupied 50 percent or more shall be based upon the usable floor areas as defined in Part 2 of this code.*

(3) *All publicly-funded living accommodations*

(4) *All publicly-funded buildings used for one or two family dwelling unit purposes shall conform to the appropriate provisions applicable to living accommodations.*

(5) *All existing publicly-funded buildings and facilities when alterations, structural repairs or additions are made to such buildings or facilities. This requirement shall apply only to the area of specific alteration, structural repair or addition and shall include those areas listed below:*

(a) *A primary entrance to the building or facility and the primary path of travel to the specific area of alteration, structural repair or addition.*

(b) *Sanitary facilities, drinking fountains, and public telephones serving the area.*

Exception No. 1: *When the total construction cost of alterations, structural repairs or additions does not exceed a valuation*

threshold of $50,000, based on January 1981, "ENR US-20 Cities" average construction cost index of 3372.02 ("Engineering News Record", McGraw-Hill Publishing Co.), and the enforcing agency finds that compliance with this Code creates an unreasonable hardship, compliance shall be limited to the actual work of the project.

The enforcing agency shall, annually, update the valuation threshold to a current amount based on the increase in the index since the last figure used.

Exception No. 2: *Alterations, structural repairs or additions consisting of one of the following shall be limited to the actual work of the project:*

a. *Altering one building entrance to meet handicapped/physically disabled requirements.*

b. *Altering one existing toilet facility to meet handicapped/physically disabled requirements.*

c. *Altering existing elevators to meet handicapped/physically disabled requirements.*

d. *Altering existing steps to meet handicapped/physically disabled requirements.*

e. *Altering existing handrails to meet handicapped/physically disabled requirements.*

Exception No. 3: *Projects which consist only of heating, ventilation, air conditioning, reroofing, electrical work not involving placement of switches and receptacles, cosmetic work that does not affect access such as painting, carpeting, etc., are not considered alteration projects for purposes of accessibility for the handicapped/people with physical disabilities and shall not be subject to DSA/AC requirements.*

B. Application. *Privately-Funded Public Accommodations and Facilities where access for people with physical disabilities is required to areas designated in Part 2 or Title 24.*

Note: *See Health and Safety Code, commencing with Section 19952.*

(1) *Any building, structure, facility, complex or improved area or portion thereof which is used by the general public and shall include:*

a. *Auditoriums, convention centers ad stadiums.*

b. *Hospitals, including but not limited to, hospitals, nursing homes, and convalescent homes.*

c. *Theaters, restaurants and shopping centers.*

d. *Hotels and motels.*

e. *Passenger vehicle service stations.*

f. *Offices of physicians and surgeons.*

g. *Office buildings.*

h. *Public curbs and sidewalks.*

(2) *Any sanitary facilities which are made available for the public, clients, or employees in such accommodations or facilities.*

(3) *Any curb or sidewalk intended for public use that is constructed in this State with private funds.*

(4) *All existing privately-funded public accommodations when alterations, structural repairs or additions are made to such public accommodations as set forth under 11B.*

Exception No. 1: *In privately funded multi-storied passenger vehicle service stations, shopping centers, offices of physicians and surgeons, and office buildings, subject to this code, floors or levels above and below the first floor or ground level are exempt from these requirements if a ramp or elevator is not available to provide public access to such floors or levels.*
Exception No. 2: *In privately funded multi-storied buildings, floors or levels above the first floor or ground level are exempt from these requirements if a reasonable portion of all facilities and accommodations normally sought and used by the public*

in such a building are accessible to and usable by physically handicapped persons/people with physical disabilities.

C. Enforcing Agency:

(1) *By the Director of General services where State funds are utilized for any project or where funds of counties, municipalities other political subdivisions are utilized for the construction of elementary, secondary or community college projects.*

(2) *By the governing bodies thereof where funds of counties, municipalities or other political subdivisions are utilized except as otherwise provided above.*

(3) *By the building department of every city, county, or city and county within the territorial area of its city, county, or city and county where private funds are utilized. "Building department" means the department, bureau, or officer charged with the enforcement of laws or ordinances regulating the erection or construction, or both the erection and construction of buildings.*

D. Special Conditions for the Physically Handicapped Requiring Appeals Action Ratification: *Whenever reference is made in these regulations to this section, the findings and determinations required to be rendered by the local enforcing agency shall be subject to ratification through an appeals process.*

E. Authority Cited-*Government Code Section 4450.*

F. Reference-*Government Code Sections 4450 through 4458 and Health and Safety Code Sections 19952 through 19959.*

CHAPTER 2
Wiring and Protection

Article 210 – Branch Circuits

A. General Provisions

210-7. Receptacles and Cord Connectors.

(g) ***[For HCD 1/AC with Exceptions, DSA/AC]*** *Installation* **Height.** *Where access for people with physical disabilities is required by Article 089-7, the center of receptacle outlets on branch circuits of 30 amperes or less shall be installed not more than 48 inches nor less than 15 inches above the floor or working platform.*

Exception No. 1: Receptacle outlets installed as a part of permanently installed baseboard heaters are exempt.

Exception No. 2: Required receptacle outlets shall be permitted in floors when adjacent to sliding panels or walls.

Exception No. 3: Baseboard electrical outlets used in relocatable partitions, window walls or other electrical convenience floor outlets are not subject to the minimum height requirements.

Exception No. 4: This section shall not apply to existing buildings when the enforcing agency determines that compliance with these standards would create an unreasonable hardship.

CHAPTER 3
Wiring Methods and Materials

Article 346 – Rigid Metal Conduit

This article is erroneously shown as adopted in the 2001 California Electrical Code. It will be removed by rulemaking by the California Building Standards Commission.

Article 380 – Switches

A. Installation

380-8. Accessibility and Grouping.

(c) ***[For HCD 1/AC, DSA/AC]*** **Installation.** *Where access for people with disabilities is required by Article 089-7, the center of the grip of the operating handle of controls or switches intended to be used by the occupant of the room or area to control lighting and receptacle outlets, appliances, or cooling, heating and ventilating equipment, shall be not more than 48 inches (1219 mm) above the floor or working platform.*

CHAPTER 5
Special Occupancies

Article 540 – Motion Picture Projections

This article is erroneously shown as adopted in the 2001 California Electrical Code. It will be removed by rulemaking by the California Building Standards Commission.

CHAPTER 7
Special Conditions

Article 760 – Fire Alarm Systems

A. General

760-16 *[For DSA/AC]* **Installation Height of Manual Stations.** *The center of fire alarm manual pull stations shall be located 48 inches above the level of the floor, working platform, ground surface or sidewalk.*

Exception: Enforcement official shall not retroactively require fire alarm initiating devices be relocated to a 48-inch height.

2001
California
Plumbing
Code

California Code of Regulations
Title 24, Part 5

Based on 2000 Uniform Plumbing Code

Effective
November 1, 2002
(For Errata and Supplements, see History Note Appendix)

CHAPTER 1

ADMINISTRATION

101.0 Title, Scope and General

101.1 Title

101.1.1 [For DSA/AC] *This document shall be known as the "California Plumbing Code." The provisions contained in the California Plumbing Code of the (compiled) California Building Standards Code as defined in Section 18910, Health and Safety Code, may be cited as such and are referred to hereafter as "these regulations," "these plumbing standards" or "this code."*

101.2 Purpose

101.2.2 [For DSA/AC] California Purpose. *To provide minimum standards to safeguard life or limb, health, property and public welfare, and protect against hazards that may arise from the use of plumbing piping and systems by regulating and controlling the design, construction, installation, quality of materials, location and operation of plumbing piping systems within the state of California.*

101.4 Scope

101.4.0 [For DSA/AC] Application. *The provisions of this code shall apply to the construction, alteration, moving, demolition, repair and use of all plumbing, gas, or drainage piping and systems or water heating or treating equipment in or on any building or structure or outdoors on any premises or property.*

101.4.1.1.3.1 [For DSA/AC] *Effective January 1, 1990, in new construction and those existing facilities which occupancy type are listed in Tables 4-1 and 4-4 for public use, which apply for permit to undertake construction, structural alterations, repairs or improvement which exceed 50 percent of the square footage of the entire facility, shall install water closets, urinals, lavatories and drinking fountains as stipulated in Tables 4-1 and 4-4 for public use.* Community and/or municipal parks with a bleacher capacity not exceeding 500 seats shall be exempt from the requirements of this section and Tables 4-1 and 4-4.

Note: *Each bathroom shall comply with Part 2, Chapters 11A and 11B of the California Building Code.*

101.4.1.4.2 [For DSA/AC] Conflicts Between Codes. *When the requirements of this code conflict with the requirements of the California Mechanical Code, Title 24, Part 4, the California Mechanical Code shall prevail.*

101.4.4 [For DSA/AC] Effective Date. *One hundred and eighty days after the date of publication, or as otherwise noted herein.*

101.4.4.1 [For DSA/AC] *The applicable subsection of Health and Safety Code Section 18938 is repeated here for clarity and reads as follows:*

Section 18938. (b) *The building standards contained in the Uniform Fire Code of the International Conference of Building Officials and the Western Fire Chiefs Association, Inc, the Uniform Building Code of the International Conference of Building Officials, Appendix Chapter 1 of the Uniform Code for Building Conservation of the International Conference of Building Officials, the Uniform Plumbing Code of the International Association of Plumbing and Mechanical Officials, the National Electrical Code of the National Fire Protection Association, the Uniform Mechanical Code of the International Conference of Building Officials and the International Association of Plumbing and Mechanical Officials, as referenced in the California Building Standards Code, shall apply to all occupancies throughout the state and shall become effective 180 days after publication in the California Building Standards Code by the California Building Standards Commission, or at a later date after publication established by the commission.*

101.4.4.2 [For DSA/AC] *The provisions of the model code which are adopted in this code are applicable to all occupancy groups and uses regulated by this code. The amendments to the model code are applicable only to those occupancies or uses which the state agency adopting the amendments is authorized to regulate as listed in Section 101.11*

101.6 [For DSA/AC] Nonbuilding Regulations. *Requirements contained in the U.P.C., or in any other referenced*

standard, code, or document, which are not building standards as defined in Section 18909, Health and Safety Code, shall not be construed as part of the provisions of this code.

101.7 [For DSA/AC] Order of Precedence. *Where, in any specific cases, different sections of this code specify different materials, methods of construction or other requirements, the most restrictive shall govern. When there is a conflict between a general and a specific requirement, the specific requirements shall apply.*

101.8 [For DSA/AC] Format. *This part fundamentally adopts the U.P.C. by reference on a chapter-by-chapter basis. Such adoption is reflected in the adoption tables of each chapter of this part. When the adoption table of a chapter of this part makes no reference to a specific chapter of the U.PC. such chapter of the U.P.C. is not adopted as a portion of this code.*

101.9 [For DSA/AC] Validity. *If any chapter, section, subsection, sentence, clause or phrase of this code is for any reason held to be unconstitutional, contrary to statute, exceeding the authority of the state as stipulated by statutes, or otherwise inoperative, such decision shall not affect the validity of the remaining portion of this code.*

101.10 [For DSA/AC] Standard Reference Documents

101.10.1 [For DSA/AC] *The codes, standards and publications, adopted and set forth in this code, including other codes, standards and publications referred to therein are, by title and date of publication, hereby adopted as standard reference documents of this code.*

101.10.2 [For DSA/AC] *When this code does not specifically cover any subject relating to building design and construction, recognized fire-prevention engineering practices shall be employed. The National Fire Codes and the Fire Protection Handbook of the National Fire Protection Association may be used as authoritative guides in determining recognized fire-prevention engineering practices.*

101.11 [For DSA/AC] Application-Vesting Authority. *When adopted by a state agency, the provisions of these regulations shall be enforced by the appropriate enforcing agency, but only to the extent of authority granted to such agency by the state legislature.*

Following is a list of the state agencies that adopt building standards, specific scope of application of the agency responsible for enforcement, and the specific authority of each agency to adopt and enforce such provisions of building standards of this code, unless otherwise stated.

101.11.9 [For DSA/AC]

DSA/AC -- Division of the State Architect; Access Compliance.

General - *To assure that barrier-free design is incorporated in all buildings, facilities, site work and other improvements to which this code applies in compliance with state law to assure that these improvements are accessible to and usable by persons with disabilities.*

Additions, alterations and structural repairs in all buildings and facilities shall comply with these provisions for new buildings, except as otherwise provided and specified herein.

The provisions of these regulations shall apply to any portable buildings leased or owned by a school district, and shall also apply to temporary and emergency buildings and facilities.

In addition, to incorporate standards at least as restrictive as those required by the federal government for barrier-free design under:

1. Title III (Public Accommodations and Commercial Facilities), Subpart D (New Construction and Alteration) and Appendix A (Americans with Disabilities Act Accessibility Guidelines) (see 28 C.F.R., Part 36), and

2. Title II (Public Entities), Section 35.151 (New Construction and Alterations) (see 28 C.F.R., Part 35) both from the Americans with Disabilities Act of 1990, and

3. Under the Fair Housing Amendments of 1988. Some of these regulations may be more stringent than state law in order to meet the federal requirement.

The following applications apply:

***A. Application**. Publicly funded buildings, structures, sidewalks, curbs and related facilities shall be accessible to persons with disabilities as follows:*

***NOTE:** See Government Code commencing with Section 4450.*

(1) All buildings, structures, sidewalks, curbs and related facilities constructed by the use of state, county or municipal funds, or the funds of any political subdivision of the state.

(2) All buildings, structures and facilities that are leased, rented, contracted, sublet or hired by any municipal, county, or state division of government, or by a special district.

(3) All publicly funded living accommodations.

(4) All publicly funded buildings used for congregate residences or for one- or two-family dwelling unit purposes shall conform to the provisions applicable to living accommodations.

(5) All existing publicly funded buildings and facilities when alterations, structural repairs or additions are made to such buildings or facilities. For detailed requirements on existing buildings, see Chapter 11B, Division IV.

(6) With respect to buildings, structures, sidewalks, curbs and related facilities not requiring a building permit, building standards published in the California Building Standards Code relating to access for persons with disabilities and other regulations adopted pursuant to Government Code Section 4450, and in effect at the time construction is commenced, shall be applicable.

***B. Application.** All privately funded public accommodations, as defined, and commercial facilities, as defined, shall be accessible to persons with physical disabilities as follows:*

***NOTE:** See Health and Safety Code commencing with Section 19952.*

***EXCEPTION:** Certain types of privately funded multistory buildings do not require installation of an elevator to provide access above and below the first floor. See Title 24, Part 2.*

***NOTE:** Exceptions for multistoried buildings formerly located in this section have been moved to Title 24, Part 2.*

(1) Any building, structure, facility, complex, or improved area, or portions thereof, which are used by the general public.

(2) Any sanitary facilities which are made available for the public, clients or employees in such accommodations or facilities.

(3) Any curb or sidewalk intended for public use that is constructed in this state with private funds.

(4) All existing privately funded public accommodations when alterations, structural repairs or additions are made to such public accommodations as set forth under Chapter 11B.

C. Enforcing Agency.

(1) The director of General Services where state funds are utilized for any project or where funds of counties, municipalities or other political subdivisions are utilized for the construction of elementary, secondary or community college projects.

(2) The governing bodies where funds of counties, municipalities or other political subdivisions are utilized except as otherwise provided above.

(3) The building department of every city, county, or city and county within the territorial area of its city, county, or city and county, where private funds are utilized, "building department" means the department, bureau or officer charged with the enforcement of laws or ordinances regulating the erection or construction, or both the erection and construction, of buildings.

D. Special Conditions for Persons with Disabilities Requiring Appeals Action Ratification.
Whenever reference is made in these regulations to this section, the findings and determinations required to be rendered by the local enforcing agency shall be subject to ratification through an appeals process.

Authority Cited *– Gov. Code §4450.*

Reference *– Gov. Code §4450 through 4460, 12955.1 and H&SC §18949.1, 19952 through 19959.*

CHAPTER 2

DEFINITIONS

203.0 **-A-**

Accessibility [For DSA/AC] *– The combination of various elements in a building or area which allow access, circulation and full use of the building and facilities by the handicapped.*

214.0 **-L-**

Lavatory [For DSA/AC] – *A plumbing fixture used for washing the hands, arms, face and head.*

221.0 **-S-**

Specialty Event Centers [For DSA/AC] *– An open arena used for rallies, concerts, exhibits, etc., with no permanent structure for purpose of assembly.*

222.0 **-T-**

Toilet [For DSA/AC] *– A fixture within a toilet room which may be used for defecation or urination.*

Toilet Room [For DSA/AC] *-- A room within or on the premises containing water closets, urinals and other required facilities.*

223.0 **-U-**

U.P.C. [For DSA/AC] *– The latest edition of the Uniform Plumbing Code, published by the International Association of Plumbing and Mechanical Officials.*

225.0 **-W-**

Water Closet [For DSA/AC] *– A plumbing fixture (which may be used for both defecation or urination0 in which the waste matter is removed by flushing with water.*

CHAPTER 3

GENERAL REGULATIONS

[For DSA/AC] ***Adopt entire 2000 UPC chapter without amendments***

CHAPTER 4

PLUMBING FIXTURES AND FIXTURE FITTINGS

412.0 Floor Drains and Shower Stalls

Note: [For DSA/AC] *See Part 2, Chapters 11A and 11B for shower compartment size for accommodation of persons with disabilities.*

TABLE 4-1*
MINIMUM PLUMBING FACILITIES

Each building shall be provided with sanitary facilities, including provisions for the physically handicapped as prescribed by the Department having jurisdiction. For requirements for the handicapped, ANSI A 117 1-1992, Accessible and Usable Buildings and Facilities may be used.

Note: *ANSI A117 1-1992 is not adopted by the Sate of California. For HCD 1/AC requirements refer to the California Code of Regulations, Title 24, Part 2, Chapter 11A, California Building Code.*

EXCEPTION 1 *[For HCD 2 & HCD 1/AC] Each building shall be provided with sanitary facilities, including provisions for persons with disabilities as prescribed by the Department. Covered multi-family dwellings required to be accessible to persons with disabilities shall comply with California Code of Regulations, Title 24, Part 2, Chapter 11A. Permanent buildings in mobile home parks and special occupancy parks required to be accessible by persons with disabilities, shall comply with California Code of Regulations, Title 24, Part 2, Chapter 11B.*

EXCEPTION 2 *[For HCD 1] Minimum Plumbing Facilities; Limited Density Owner-built Rural Dwellings. For limited density owner-built rural dwellings sanitary facilities, the type design and number of facilities as required and approved by the local health official shall be provided to the dwelling sites. It shall not be required that such facilities be located within the dwelling.*

The total occupant load shall be determined by minimum exiting requirements. The minimum number of fixtures shall be calculated at fifty (50) percent male and fifty (50) percent female based on the total occupant load.

Type of Building or Occupancy[2]	Water Closets[14] (Fixtures per Person)	Urinals[5,10] (Fixtures per Person)	Lavatories (Fixtures per Person)	Bathtubs or Showers (Fixtures per Person)	Drinking Fountain[3,13] (Fixtures per Person)
Assembly Places – Theatres, Auditoriums	Male 15 Female[4]1: 1- 1: 1-15	Male 0:1-9	Male 1 per 40 Female 1 per 40		
Convention Halls, etc. - for permanent employee use	2: 16-35 3: 16-35 3: 36-55 4: 36-55 Over 55, add 1 fixture for each additional 40 persons.	1:10-50 Add one fixture for each additional 50 males.			
Assembly Places – Theaters, Auditoriums,	Male 1:1-100 Female[14] 3:1-50	Male 1:1-100	Male 1:1-200 Female 1:1-200		1: 1 – 150
Convention Halls, etc – for public use	2:101-200 3:201-400 4:51-100 8:101-200 11:201-400 Over 400, add one fixture for each additional 500 males and 1 for each additional 125 females	2:101-200 3:201-400 4:401-600 Over 600 add 1 fixture for each additional males	2:201-400 3:401-750 2:201-400 3:401-750 Over 750, add one fixture for each additional 500 persons		2: 151-400 3: 401-750 Over 750, add one fixture for each additional 500 persons
Dormitories[9] School or Labor	Male 1 per 10 Female 1 per 8	Male 1 per 25	Male 1 per 12 Female 1 per 12	1 per 8 For females, add	1 per 150[12]
	Add 1 fixture for each additional 25 males (over 10) and 1 for each additional 20 females (over 8)	Over 150, add 1 fixture for each additional 50 males.	Over 12 add one fixture for each additional 20 males and 1 for each 15 additional females	1 bathtub per 30. Over 150, add 1 per 20	
Dormitories – for staff use	Male 1:1-15 Female 1:1-15	Male 1 per 50	Male 1 per 40 Female 1 per 40	1 per 8	
	2:16-35 3:16-36 3:36-55 4:36-55 Over 55, add 1 fixture for each additional 40 persons				
Dwellings[4] – Single Dwelling	1 per dwelling		1 per dwelling	1 per dwelling	

* A clarifying annotation is need in Table 4-1. The annotation should state, 'For DSA/AC to carry out its statutory responsibilities, DSA/AC's application of California Plumbing Code Tables 4-1 through 4-4 are limited to those applications stated in 101.11.9.'

Type of Building or Occupancy[2]	Water Closets[14] (Fixtures per Person)	Urinals[5,10] (Fixtures per Person)	Lavatories (Fixtures per Person)	Bathtubs or Showers (Fixtures per Person)	Drinking Fountain[3,13] (Fixtures per Person)
Multiple Dwelling or Apartment House Hospital Waiting rooms	1 per dwelling or apartment unit 1 per room		1 per dwelling or apartment unit 1 per room	1 per dwelling or apartment unit	 1 per 150[12]
Hospitals- for employee use	Male Female 1::15 1:1-15	Male 0:1-9	Male Female 1 per 40 1 per 40		
Hospitals Individual Room	2:16-35 3:16-35 3:36-55 4:36-55 Over 55, add 1 fixture for each additional 40 persons 1 per room	1:10-50 Add one fixture for each additional 50 males	 1 per room	 1 per room	
Ward Room	1 per 8 patients		1 per 10 patients	1 per 20 patients	1 per 150[12]
Industrial[6] Warehouses Workshops, Foundries and similar establishments (for employee use)	Male Female 1:1-10 1:1-10 2:11-25 2:11-25 3:26-50 3:26-50 4:51-75 4:51-75 5:76-100 5:76-100 Over 100, add 1 fixture for each additional 30 persons		Up to 100, 1 per 10 persons Over, 100, 1 per 15 persons [7,8]	1 shower for each 15 persons exposed to excessive heat or to skin contamination with poisonous, infectious, or irritating material	1 per 150[12]
Institutional - Other than Hospitals or Penal Institutions (on each occupied floor)	Male Female[4] 1 per 25 1 per 20	Male 0:1-9 1:10-50 Add one fixture for each additional 50 males	Male Female 1 per 10 1 per 10	1 per 8	1 per 150[12]
Institutional - Other than Hospitals or Penal Institutions (on each occupied floor) For employee use	Male Female[14] 1:1-15 1:1-15 2:16-35 3:16-35 3:36-55 4:36-55 Over 55, add 1 fixture for each additional 40 persons	Male 0:1-9 1:10-50 Add one fixture for each additional 50 males	Male Female 1 per 40 1 per 40	1 per 8	1 per 150[12]
Office or Public Buildings	Male Female[14] 1:1-100 3:1-50 2:101-200 4:51-100 3:201-400 8:101-200 11:201-400 Over 400, add one fixture for each additional 500 males and one for each additional 150 females	Male 1:1-100 2:101-200 3:201-400 4:401-600 Over 600 add 1 fixture for each additional 300 males	Male Female 1:1-200 1:1-200 2:201-400 2:201-400 3:401-750 3:401-750 Over 750, add one fixture for each additional 500 persons		1 per 150[12]
Office or Public Buildings - For employee use	Male Female[14] 1:1-15 1:1-15 2:16-35 3:16-35 3:36-55 4:36-55 Over 55, add 1 fixture for each additional 40 persons	Male 0:1-9 1:10-50 Add one fixture for each additional 50 males	Male Female 1 per 40 1 per 40		
Penal Institutions For employee use	Male Female[14] 1:1-15 1:1-15 2:16-35 3:16-35 3:36-55 4:36-55 Over 55, add 1 fixture for each additional 40 persons	Male 0:1-9 1:10-50 Add one fixture for each additional 50 males	Male Female 1 per 40 1 per 40		1 per 150[12]
Penal Institutions For prison use Cell Exercise Room *Exercise Area*	 1 per cell 1 per room *1 per 20*	Male 1 per exercise room	 1 per cell 1 per exercise room *1 per 20*	*1 per 16*	 1 per cell block floor 1 per exercise room *Access to drinking fountain*
Agriculture Buildings *Milking Barns* *Meat and Poultry Inspections Bldgs*	*At least 1* *Male Female* *1:1-15 1:1-15* *2:16-35 2:16-35* *3:36-55 3:36-55* *4:56-80 4:56-80* *1 for each additional 30 persons in excess of 80*		*At least 1*		

Type of Building or Occupancy[2]	Water Closets[14] (Fixtures per Person)	Urinals[5,10] (Fixtures per Person)	Lavatories (Fixtures per Person)	Bathtubs or Showers (Fixtures per Person)	Drinking Fountain[3,13] (Fixtures per Person)
Schools of Cosmetology	*Male Female* **At least 1 *At least 2* ---------- **Per installation*		*At Least 1*		
Cosmetological Establishments	* At least 1 At least 1 *Per installation				
Health Facilities and Clinics *Waiting Room* *For Patient Use[12]* *For Employee Use* *Including Locker Room*	*Male Female* *1 per room* *1 per 6 patients* *1:1-15 1:1-15* *2:16-35 2:16-35* *3:36-55 3:36-55* *Over 55 add 1 fixture for each additional 40 persons*	*1 per 50*	*Males Females* *1 per 8 patients* *1 per 40 1 per 40*	*1 per 12 patients*	*1 per 75[12]* *1 per nursing unit*
Board of Corrections *Juvenile Halls*	*1 per 6*		*1 per 6*	*1 per 6*	*Access to drinking fountain*
Camp	*1 per 10*		*1 per 10*	*1 per 7*	*Access to drinking fountain*
Board of Corrections *Local Detention Facilities* *Locked Sleeping Rooms[11]*	*1 per 8* *1*		*1 per 8* *1`*	*1 per 20*	
Restaurants, Pubs and Lounges[11]	Male Female 1:1-50 1:1-50 2:51-150 2: 51-150 3:151-300 4: 151-300 Over 300 add 1 fixture for each additional 200 persons	Male 1: 1-150 Over 150, add 1 fixture for each additional 150 males	Male Female 1:1-150 1:1-150 2:151-200 2: 151-200 3:201-400 3: 201-400 Over 400 add 1 fixture for each additional 400 persons		
Schools – for staff use All schools	Male Female 1:1-15 1:1-15 2:16-35 2:16-35 3:36-55 3:36-55 Over 55 add 1 fixture for each additional 40 persons	Male 1 per 50	Male Female 1 per 40 1 per 40		
Schools – for student use Nursery Elementary Secondary Others (Colleges, Universities, Adult Centers, etc.)	Male Female 1:1-20 1:1-20 2:21-50 2:21-50 Over 50, add 1 fixture for each additional 50 persons Male Female 1 per 30 1 per 25 Male Female 1 per 40 1 per 30 Male Female 1 per 40 1 per 30	 Male 1 per 75 Male 1 per 35 Male 1 per 35	Male Female 1:1-25 1:1-25 2:26-50 2: 26-50 Over 50, add 1 fixture for each additional 50 persons Male Female 1 per 35 1 per 35 Male Female 1 per 40 1 per 40 Male Female 1 per 40 1 per 40		1 per 150[12] 1 per 150[12] 1 per 150[12] 1 per 150[12]
Worship Places Educational and Activities Unit	Male Female 1 per 150 1 per 75	Male 1 per 150	1 per 2 water closets		1 per 150[12]
Worship Places Principal Assembly Place	Male Female 1 per 150 1 per 75	Male 1 per 150	1 per 2 water closets		1 per 150[12]

1. The figures shown are based upon one (1) fixture being the minimum required for the number of persons indicated or any fraction thereof.
2. Building categories not shown on this table shall be considered separately by the Administrative Authority.
3. Drinking fountains shall not be installed in toilet rooms.
4. Laundry trays. One (1) laundry tray or one (1) automatic washer standpipe for each dwelling unit or one (1) laundry tray or one (1) automatic washer standpipe, or combination thereof, for each twelve (12) apartments. Kitchen sinks, one 91) for each dwelling or apartment unit.
5. For each urinal added in excess of the minimum required, one water closet may be deducted. The number of water closets shall not be reduced to less than two-thirds (2/3) of the minimum requirement.

6. As required by ANSI Z4.1-1986, Sanitation in Places of Employment.

7. Where there is exposure to skin contamination with poisonous, infectious, or irritating materials, provide one (1) lavatory for each five (5) persons.

8. Twenty-four (24) lineal inches (610 mm) wash sink or eighteen (18) inches (457 mm) of a circular basin, when provided with water outlets for such space, shall be considered equivalent to one(1) lavatory.

9. Laundry trays, one (1) for each fifty (50) persons. Service sinks, one (1) for each hundred (100) persons.

10. General. In applying this schedule of facilities, consideration shall be given to the accessibility of the fixtures. Conformity purely on a numerical basis may not result in an installation suited to the need of the individual establishment. For example, schools should be provided with toilet facilities on each floor having classrooms.

    a. Surrounding materials, wall and floor space to appoint two (2) feet (610 mm) in front of urinal lip and four (4) feet (1219 mm) above the floor, and at least two (2) feet (610 mm) to teach side of the urinal shall be line with non-absorbent materials.

    b. Trough urinals shall be prohibited.

11. A restaurant is defined as a business which sells food to be consumed on the premises.

    a. The number of occupants for a drive-in restaurant shall be considered as equal to the number of parking stalls..

    b. Employee toilet facilities shall not be included in the above restaurant requirements. Hand washing facilities shall be available in the kitchen for employees.

12. Where food is consumed indoors, water stations may be substituted for drinking fountains. Offices, or public buildings for use by more than six (6) persons shall have one (1) drinking fountain for the first one hundred fifty (150) persons and one (1) additional fountain for each three hundred (300) persons thereafter.

13. There shall be a minimum of one (1) drinking fountain per occupied floor in schools, theatres, auditoriums, dormitories, offices or public building.

14. The total number of water closets for females shall be at least equal to the total number of water closets and urinals required for males.

15. Fixtures need not to be located within the locked room provided a communication system or procedure is in effect to give the minor immediate access to a lavatory, toilet and drinking fountain.

16. Fixtures serving individual patient rooms shall not be considered as meeting the required rates for bedrooms not served by individual adjoining toilets or bathrooms.

TABLE 4-2*

Space	Lavatories[2]	Scrub Sinks[2]	Toilets	Tubs or Showers[3]	Service Sinks[4]	Clinic Sinks[4]
Doctors' Dressing, General	1[5]		1			
Nurses' Dressing, General	1[5]		1			
Surgery and Delivery Suite Doctors' dressing Nurses' dressing Clean–up rooms	 1[5] 1[5] 1	2[6]	 1 1	 1 Shower 1 Shower	1	
Emergency Surgery, Cystoscopy and Special Procedure Room		1 Each[7]			1	
Anesthesia Workroom	1					
Exam/Treatment Rooms	1					
Kitchen and Food Service Areas	1				1	
Labor Rooms	1		1[17]	1[17]		
Laundry, Soiled Sorting	1					
Morgue	1				1	
Negative-pressure Isolation Rooms[10]	2[10]		1[10]	1[10]		
Nurses' Stations[9]	1					
Physical Therapy	1					
Positive-pressure Isolation Rooms[10]	2[10]		1[10]	1[10]		
Postanesthesia Recovery	1					1
Radigraphic Suites	1		1[11]			
Utility Room, Clean[9]	1					
Utility Room, Soiled[9]	1					1[12]
Nursery Exam/Workrooms	1					
Nurseries; Well Newborn Intensive Care Intermediate Care	1:6 Bassinets 1:4 Bassinets 1:4 Bassinets					
Intensive Care Units[13]	1:6 Beds		1[14]			1
Coronary Care Unit	1:1 Patient Room		1[14]			1
Dialysis Units	1:8 Stations		1[14]		1	1
Central Supply and Sterilization	1[8]				1	
Laboratories	1[8]				1	
Medicine Rooms[9, 16]	1[8]					
Nursing Unit				1[15]	1	
Occupational Therapy	1[8]					
Patient Pantries	1[5]					
Pharmacy	1[8]					

* A clarifying annotation is need in Table 4-2. The annotation should state, 'For DSA/AC to carry out its statutory responsibilities, DSA/AC's application of California Plumbing Code Tables 4-1 through 4-4 are limited to those applications stated in 101.11.9.'

1. *Separate toilet facilities shall be provided for the use of patients, staff personnel and visitors.*

2. *Fixtures shall be equipped without aerators. The water discharge point shall be 127 millimeters (5 inches) above fixture rim and be equipped with hot-and cold-water supplies not requiring direct contact of the hands for operation (wrist or elbow blades are not acceptable). Sensor operated fixtures may be used, provided they are either battery operated or connected to the critical branch of the essential electrical system.*

3. *Each department shall be served by a service closet equipped with a service sink. Departments may share service closets provided the departmental services are compatible. The fixtures listed cannot be shared.*

4. *Clinic sinks shall be rim flushing with integral 3-inch (76 mm) trap in which the upper portion of a visible trap seal provides a water surface, and shall be equipped with flushometer valve and hot-and cold-water supplies.*

   Exception: *Clinic sinks are not required for chemical dependency recovery hospitals.*

5. *Conventional spouts and controls on hot-and cold-water supplies are acceptable. Aerators are not permitted.*

6. *a. A minimum of two scrub sinks shall be provided in a surgical unit containing one operating room. Four scrub sinks shall be provided in surgical units containing two operating rooms. One additional scrub sink shall be provided per each additional operating room.*

   b. A minimum of two scrub sinks shall be provided in a delivery unit containing one delivery room. One additional scrub sink shall be provided for each additional delivery room.

7. *The scrub sink is in addition to the required number for surgeries.*

8. *Conventional controls on hot-and cold-water supplies are acceptable. The water discharge points shall be 127 millimeters (5 inches) above the fixture rims and equipped without aerators.*

9. *Includes rooms or areas within coronary-and intensive-care units and postanesthesia recovery rooms.*

10. *The following fixtures shall be provided in isolation rooms of hospitals only:*

    a. Within an adjoining toilet room, a lavatory, a shower containing a seat or a space for a shower chair, and water closet equipped with bedpan flushing attachment with a vacuum breaker.

    b. A sink equipped per Note 2 within a separate anteroom.

    Exception: *Chemical dependency recovery hospitals.*

11. *A toilet room with lavatory shall adjoin each fluoroscopy room.*

12. *The clinic sink may be deleted if all bedrooms in the nursing unit are provided with adjoining toilets with bedpan flushing devices.*

    Exception: *Chemical dependency recovery hospitals are not required to provide bedpan flushing devices.*

13. *Includes burn treatment and respiratory-care units.*

14. *The water closet must be quipped for both staff and patient use if only one water closet is provided.*

15. *Minimum of one tub room per floor on nursing units providing skilled nursing or intermediate care services.*

16. *If a separate medicine room is provided, then room shall be equipped with a sink in addition to the nurses' station sink. Hot-water supplies are optional.*

17. *One toilet with lavatory and one shower may serve more than one labor room.*

18. *Chemical dependency recovery hospitals are only required to provide lavatories equipped per Note 2 for exam rooms and kitchens. All other fixtures may be equipped per Note 5.*

19. *The following fixtures shall be provided in isolation rooms of correctional treatment centers only:*

    a. Within an adjoining toilet area, a lavatory, a shower containing a seat or a space for a shower chair, and water closet equipped with bedpan flushing attachment with a vacuum breaker.

    b. A sink equipped per Note 2 within a separate anteroom.

*TABLE 4-3**

Type of Building or Occupancy[2]	Water Closets (Fixtures per Person) Male	Water Closets (Fixtures per Person) Female	Urinals (Trough urinal to individual urinal equivalence) Male	Lavatories (Fixtures per Person)	Bathtubs or Showers (Fixtures per Person)[7]	Drinking Fountains (Fixtures per Person)[3]
Nonindustrial-office buildings, public buildings and similar establishments	1 1-15 2 16-35 3 36-55 4 56-80 5 81-110 6 111-150 1 additional for each additional 40 employees or fraction thereof.	1 1-15 2 16-35 3 36-55 4 56-80 5 81-110 6 111-150	Length of Trough urinal / Number of individual urinals 24" (610 mm)……1 36" (914 mm) ……2 48"(1219 mm) ……2 60" (1524 mm) ……3 72" (1879 mm) ……4	1 1-15 2 16-35 3 36-60 4 61-90 5 91-125 1 additional for each additional 4 employees or fraction thereof	1:10 person per shift required to shower	_____
Industrial-factories, warehouses, loft buildings and similar establishments	1 1-15 2 16-35 3 36-55 4 56-80 5 81-110 6 111-150 1 additional for each additional 40 employees or fraction thereof.	1 1-15 2 16-35 3 36-55 4 56-80 5 81-110 6 111-150	24" (610 mm) ……1 36" (914 mm) ……2 48"(1219 mm) ……2 60" (1524 mm) ……3 72" (1879 mm) ……4	1 to 100 employees 1 per 10 Over 100 employees1 additional for each additional 15 employees or fraction thereof	1:10 persons per shift required to shower	_____

1 The figures shown are based on one fixture being the minimum required for the number of persons indicated or any fraction thereof.

2 Each water closet shall occupy a separate compartment which shall be equipped with a door, door latch and clothes hook. The door and the walls or partitions between fixtures shall be sufficient to assure privacy.

3 Drinking fountains shall not b located in toilet rooms.

4 Washing facilities shall be reasonably accessible to all employees.

5 Toilet facilities shall be accessible to the employees at all times. Where practicable, toilet facilities should be within 200 feet (61 m) of locations at which workers are regularly employed and should not be more than one floor-to-floor flight of stairs from working areas.

6 Urinals may be installed instead of water closets in toilet rooms to bused only by men provided that the number of water closets shall not be less than two thirds of the minimum number of toilet facilities specified. The length of trough urinals to the equivalent number of individual urinals shall be based on the above table.

7 When there are less than five employees, separate toilet rooms for each sex are not required provided toilet rooms can be locked from the inside and contain at least one water closet.

8 Twenty-four linear inches of wash sink or 18 inches of circular basin, when provided with water outlets for such space, shall be considered equivalent to one lavatory.

Exception: The requirements of Table C-3 do not apply to mobile crews or to normally unattended work locations provided employees at these locations have immediately available transportation to nearby toilet facilities which meet the requirements of Table C-3.

* A clarifying annotation is need in Table 4-3. The annotation should state, 'For DSA/AC to carry out its statutory responsibilities, DSA/AC's application of California Plumbing Code Tables 4-1 through 4-4 are limited to those applications stated in 101.11.9.'

*TABLE 4–4**

Type of Building or Occupancy[2]	*Water Closets (Fixtures per Person)*	*Urinals (Fixtures per Male)*	*Lavatories (Fixtures per Person)*	*Bathtubs or Showers (Fixtures per Person*	*Drinking Fountains (Fixtures per Person)*
Day use Public Beaches [1,2]	*Male* *Female* *1 1-100* *1 1-100* *No sex designated* *1 1-500* *Minimum of 2*	*May be substituted for up to two-thirds of the water closets required*			
Picnic Areas	*Male* *Female* *1 :1-50* *1 1-50*				
Overnight Use Public Beaches[2]	*1 1-7.5 campsites*[3] *1 1-7.5 campsites*[3]	*May be substituted for up to one third of the water closets required*[3]		*1 1-12.5 campsites*[4]	
Organized Camps	*1 1-15*[3]		*1 1-15*	*1 1-156*	*Minimum 1 per Camp*

1 Toilets shall be located in accordance with actual use patterns on the beach. The reasonable intent of the toilet requirements is that it should apply on the basis of average daily use during periods of peak use. The health officer may determine how many days the population standard may be exceeded.

2 Laundry facilities are not required, but if they are provided, must be a minimum of two laundry trays or a washing machine.

3 Toilet facilities shall not be farther than 400 feet from any lot or campsite.

4 Showers are not required, but if provided, they shall be provided on the indicated ratio. Outdoor rinse-off showers may be cold water only.

5 Toilets shall be located within 300 feet from the living accommodations they serve.

6 Showers shall be provided in the living area or in a centrally located structure.

***Exception:** Intermittent short-term organized camps are not required to provide shower facilities, but if provided, they shall comply with this part.*

* A clarifying annotation is need in Table 4-4. The annotation should state, 'For DSA/AC to carry out its statutory responsibilities, DSA/AC's application of California Plumbing Code Tables 4-1 through 4-4 are limited to those applications stated in 101.11.9.'

CHAPTER 16

PLUMBING REQUIREMENTS FOR ACCOMMODATION OF PERSONS WITH PHYSICAL DISABILITIES

***1601.0 [For DSA/AC w/exceptions & note] General.**
This chapter contains building standards of the Division of State Architect/Access Compliance and the Department of Housing and Community Development applicable to all buildings and facilities required to be accessible to and usable by persons with disabilities.

***Note: [For DSA/AC]** For description of "Multifamily Dwelling" see DSA/AC in Section 101.11.1 of this code.*

***Exceptions:**
*1. **[For DSA/AC]** In existing buildings, when the enforcing agency determines that compliance with any regulation under this chapter would create an unreasonable hardship, an exception shall be granted when equivalent facilitation is provided.*

*2. **[For DSA/AC]** In existing buildings, when the enforcing agency determines because of physical constraints compliance with this chapter or equivalent facilitation would create an unreasonable hardship, these regulations shall not apply.*

***3. **[For DSA/AC]** For accessibility requirements for Plumbing requirements for accommodation of physically handicapped persons in public accommodations commercial buildings, publicly funded owned or leased housing, see Chapter 11A and 11B, Sections **1115B.2.0 through 1115B.2.1.20.*

---

* In section 1601.0 (General) the section numbers, banner, text, Note and Exceptions 1 and 2 are pointless as the plumbing regulations were relocated to CCR, Title 24, Part 2, Section 1115B for Bathing and Toilet Facilities. Cross-reference to an Exception 3 is incorrect. In Exception 3 the cross-references to 1115B.2.0 through 1115B.2.1.20 are incorrect. All text, note and Exceptions 1 and 2 should be deleted.
** Exception 3 should be a note. Cross-references in Exception 3 should read Section 1115B. These will be submitted for correction in Rulemaking.

HISTORY NOTE APPENDIX

California Plumbing Code
(Title 24, Part 5, California Code of Regulations)

For prior history, see the History Note Appendix to the California Plumbing Code 1998 Triennial Edition Published in December 1998 and effective July 1, 1999.

1. [DSA/AC 3/01] *Adoption of the 2000 edition of the Uniform Plumbing Code of the International Association of Plumbing and Mechanical Officials (CCR, Title 24, Part 5) with necessary amendments pertaining to accessibility standard for persons with disabilities. Approved by the Building Standards Commission on November 28, 2001 and effective on November 1, 2002.*

2001 California Historical Building Code

California Code of Regulations
Title 24, Part 8

EFFECTIVE
November 1, 2002

Chapter 8-6

ALTERNATIVE ACCESSIBILITY PROVISIONS

[For DSA/AC] *See Division II, Chapter 34, Part 2, Title 24, California Code of Regulations.*

2001
California
Fire
Code

California Code of Regulations
Title 24, Part 9

Based on 2000 Uniform Fire Code

EFFECTIVE
November 1, 2002

ARTICLE 52 – MOTOR VEHICLE FUEL-DISPENSING STATIONS

SECTION 5201 – GENERAL

5201.5 Installation of Dispensing Devices.

5201.5.1 Protection of dispensers. Dispensing devices shall be protected against physical damage from vehicles by mounting on a concrete island 6 inches (152.4 mm) or more in height or by other approved methods. *[For DSA/AC and SFM] where dispensing devices are mounted at grade, they shall be protected at each end with a minimum of two concrete filled steel posts, 6 inches (152 mm) in diameter, having a minimum 3 feet (914 mm) deep footing not less than 15 inches (381 mm) in diameter and projecting above grade at a minimum of 3 feet (914 mm) and be located not less than 4 feet (1219 mm) nor more than 5 feet (1524 mm) from fuel dispensers or point-of-sale devices, or equivalent means approved by the chief.*

2001
California
Referenced
Standards
Code

California Code of Regulations
Title 24, Part 12

EFFECTIVE
November 1, 2002
(For Errata and Supplements, see History Note Appendix)

Chapters 12-11A and 12-11B
BUILDING AND FACILITY ACCESS SPECIFICATIONS

NOTE: Detectable warning products and directional surfaces installed after January 1, 2001, shall be evaluated by an independent entity, selected by the Department of General Service's, Division of the State Architect, Access Compliance for all occupancies, including transportation and other outdoor environments, except that when products and surfaces are for use in residential housing evaluation shall be in consultation with the Department of Housing and Community Development. See Government Code Section 4460.

Detectable Warnings

Secs. 12-11A.201 and 12-11B.201. "Nominal" means that premanufactured detectable warnings or devices used to create the detectable warning in place shall comply with required dimensions within ± 0.020-inch for dome height, top diameter and bottom diameter and 0.050-inch for dome spacing.

Product Approval for Detectable Warning Products and Directional Surfaces

Scope

Secs. 12-11A.202 and 12-11B.202. These requirements and test methods apply to detectable warning products and directional surfaces.

Detectable Warning Products

Secs. 12-11A.203 and 12-11B.203. Must comply with the California Code of Regulations, Title 24.

Directional Surfaces

Secs. 12-11A.204 and 12-11B.204. Must comply with the California Code of Regulations, Title 24.

Independent Entity

Secs. 12-11A.205 and 12-11B.205. Evaluation by an independent entity to confirm the prescription and performance standard of detectable warning products or direction surfaces installed after January 1, 2001. An independent entity is a not-for-profit product safety testing and certification organization, dedicated to testing for public safety. An independent entity would operate for the testing, certification and quality assessment of products, systems and services.

Two – Year Approval

Secs. 12-11A.206 and 12-11B.206. Detectable warning products and directional surfaces are to be recertified every two years without exception or waiver.

Fee

Secs. 12-11A.207 and 12-11B.207. The Division of the State Architect Access Compliance may impose a fee on manufacturer's of the specified products, to cover the cost of detectable warning products and directional surfaces.

Disability Access Account

Secs. 12-11A.208 and 12-11B.208. The fees received from manufacturers will be placed in the Disability Access Account.

Detectable Warning Products and Directional Surfaces

Secs. 12-11A.209 and 12-11B.209. Detectable Warning Products and Directional Surfaces must ensure consistency and uniformity:

a) Shape
b) Color fastness,
c) Conformation,
d) Sound-on-cane acoustic equality,
e) Resilience, and
f) Attachment will not degrade significantly for at least five years.

Significant Degradation

Secs. 12-11A.210 and 12-11B.210. Significant degradation means that the product maintains at least 90 percent of its approved design characteristics.

Selection of Independent Entity

Secs.12-11A.211 and 12-11B.211. The independent entity selected by the Division of the State Architect Access Compliance shall be recognized as having appropriate expertise in determining whether products comply with the California Code of Regulations, Title 24.

Authority: Government Code Sections 4450, 4460 and Health & Safety Code Section 18949.1.
Reference: Government Code Section 4460.

Chapter 12-35
CALIFORNIA BUILDING CODE STANDARDS

(See Part 2, Chapter 35.)

DIVISION OF THE STATE ARCHITECT

The referenced standards in Part 12, Chapter 12-35 are adopted to be consistent with the technical building standards adopted in Part 2, Chapter 35 – UNIFORM BUILDING CODE STANDARDS, for the Division of the State Architect – Access Compliance.

12-35-101 AMERICAN NATIONAL STANDARDS INSTITUTE (ANSI) 17.1-86)

12-35-102 CALIFORNIA CODE OF REGULATIONS (CCR)

12-35-103 NATIONAL FIRE PROTECTION ASSOCIATION (NFPA) 72-96 (National Fire Alarm Code)

Authority: Government Code Sections 4450 through 4460, 12955.1 and Health & Safety Code Sections 18949.1, 19952 through 19959.
Reference: Government Code Sections 4450.

HISTORY NOTE APPENDIX

CALIFORNIA REFERENCE STANDARDS CODE
(Title 24, Part 12, California Code of Regulations)

For all previous History Notes, see the 1998 Edition, Title 24, Part 12.

Chapter 12-1 ADMINISTRATION

1. (DSA/AC 05/01) Part 12, Chapter 12-1. Approved by the California Building Standards Commission on September 25, 2001, and filed with the Secretary of State on January 20, 2002. Effective November 1, 2002.

Chapter 12-11A and 12-11B BUILDING AND FACILITY ACCESS SPECIFICATIONS

1. (DSA/AC 02/01) Part 12, Chapter 12-11A and 12-11B. Approved by the California Building Standards Commission on November 28, 2001, and filed with the Secretary of State on January 30, 2002. Effective November 1, 2002.

Chapter 12-35 CALIFORNIA BUILDING CODE STANDARDS

1. (DSA/AC 01/01) Part 12, Chapter 12-35. Approved by the California Building Standards Commission on March 20 2002, and filed with the Secretary of State on April 3, 2002. Effective May 3, 2002.

DSA Access Policy Index

ACCESS POLICY UPDATE

7-1-00

The following policies are adopted by DSA Access Compliance and are applicable to projects under the jurisdiction of DSA. This guide is organized with an index of *all* Access Compliance policies dating from 1994 to the present, which includes policies that have been deleted, suspended or revised.

This guide serves as an online document to allow the user to locate specific policies directly from the index. The policies that are currently in use are noted with the policy number underlined and highlighted in blue. The actual policy may be viewed by clicking on the highlighted policy number, or the corresponding policy title. To return to the index, either use the “back” arrow button in the Adobe Reader navigation toolbar, or click on the “Return to Policy Index” at the bottom of the first page of each policy.

All policies were adopted by authority assigned in California Health and Safety Code 17308(d) and California Government Code 4451 (f) to carry out the legislative scheme mandated by Government Code Section 4452.

Situations addressed by these policies are evaluated on a case-by-case basis, and a final determination is made on the basis of the physical and legal constraints or other issues that may affect the project. These policies have no application to local jurisdictions without express concurrence by those jurisdictions.

Presented by DSA, the Division of the State Architect – a Division of California’s Department of General Services

DSA Access Compliance Policy Index

Policies are numbered sequentially within the original year of issue. Example: “94-10” is the tenth policy issued in 1994. Missing numbers indicate policies that are not access-related.

Policy Number	Status/Title of Policy
94-01	Superseded by 96-01 **Application of Existing Building Requirements in Seismic Upgrade of Unreinforced Masonry Buildings, Repair of Earthquake Damage, or Emergency Retrofit for Seismic Safety, Etc.**
94-02	Formally Deleted 2/10/96 **Accessibility Requirements for Emergency Portable Classrooms at School Sites with Seismic Damage at El Camino Senior High School**
94-03	Formally Deleted 8/10/95 **Accessibility Requirements for Emergency Portable Classrooms at School Sites with Seismic Damage**
94-04	Formally Deleted 10/1/98 **Accessibility Requirements for Projection Booths or Rooms in Non-Teaching Accommodations**
94-05	**Accessibility Requirements for Exits, Exitways, and Areas of Rescue Assistance**
94-10	**Permits and Resurfacing, Repairing, and Alterations of Parking Lots**
94-13	**Accessibility Requirements for Seismic Safety Enhancement and Repair at School Sites with Damage**
94-15	Formally Deleted 4/1/98 **Recommended Dimensions for Accessibility in Toilet Facilities for Children**
94-16	Revised 3/15/2000 **Portable Classrooms: Existing Handrails on Existing Relocated Portables**
94-18	Revised 4/1/98 **Ramp Landing Clearances at Doors**
94-22	**Alterations After Fire Damage**
95-01	Revised 10/1/98 **Public School Alteration Projects (Under $20,000)**
95-02	Revised 10/1/98 **Single Room Occupancy - Hotels**
95-05	**Residential Elevators in Commercial Buildings**
95-06	Revised 10/1/98 **Home Business Accessibility (DSA Jurisdictional Only)**

Policy Number	Status/Title of Policy
95-07	Revised 3/15/2000 **Seismic Upgrade in Hospitals**
95-08	Revised 3/15/2000 **Counters - Food Preparation Facilities**
95-09	Revised 3/15/2000 **Accessible Seating at Service Counters**
95-10	Superseded by 96-01 **DSA Seismic Policy on Seismic Upgrade Projects**
96-01	**DSA Seismic Policy on Seismic Upgrade Projects**
96-04	**Elevator Call Button-Mounting Height**
96-05	Formally Deleted 3/31/2000 **Modernization Program**
96-06	**Fire Repair Construction**
96-08	Formally Deleted 1/1/2000 **Equivalent Facilitation**
96-09	Formally Deleted 1/21/2000 **Alternate Methods**
96-10	Revised 12/30/96 **Handrails at Steps**
97-01	**Unisex Restrooms**
97-02	Revised 4/5/2000 **Permit Extensions**
97-03	Revised 6/5/97 **Interim Disabled Access Guidelines for Electrical Vehicle Charging Stations**
97-04	Revised 4/5/2000 **Engineered Wood Product at Playground Equipment**
97-05	Revised 4/5/2000 **Detectable Warning Domes at Curb Cuts Required by Federal Law to be Flushed at the Lip**
97-06	Revised 4/5/2000 **Parking Ticket Dispensers**
97-07	Revised 3/1/2000 **Manufactured Ramps for Relocatable Buildings**
97-11	**Over-the-Counter Approvals for Existing Restrooms**

Policy Number	Status/Title of Policy
97-12	**Access Code Adoption to the Metric System**
98-01	Revised 4/5/2000 **Special Access (Wheelchair) Lifts**
98-02	**Two-Story Relocatable Classrooms Project**
98-03	**Modernization Program**
98-04	Revised 4/5/2000 **Accessibility Requirements in Group I Occupancies**
98-05	Revised 3/16/2000 **Folding Bleachers Accessible Seats**
98-06	Revised 4/5/2000 **Signs**
98-07	**Assembly Seating**
98-08	Formally Deleted 1/12/00 **Window Hardware**
99-01	Revised 3/10/00 **Special Education Relocatable Classrooms**
99-02	**Playgrounds (Being Revised)**
99-03	Formally Deleted 10/1/99 **No Title**
99-05	**Application for Unreasonable Hardship Exception**
99-06	**Residential Care Facility**
99-07	**Toilet Paper Dispensers at Accessible Stalls**
99-08	Revised 1/1/00 **Door Stops and Other Floor-Mounted Obstructions**
99-09	Formally Deleted 10/1/99 **Waivers**
99-09.1	Supersedes 99-09 **Waivers**
00-01	**Self-Evaluation and Transition Plan**
00-02	**Acceptance of Construction Documents Policy**

Accessibility Requirements for Exits, Exitways, and Areas of Rescue Assistance

94-05

Effective 3-1-94

This policy is applicable to projects under DSA jurisdiction only. DSA's Access Compliance jurisdiction encompasses state-funded buildings, facilities and universities, as well as publicly-funded elementary schools, secondary schools, and community colleges. Local jurisdictions may or may not adopt similar methods of administering current code requirements, determining equivalent facilitation, or defining acceptable parameters as necessary in enforcing the existing California Building Standards Code as allowed under Government Code Section 4451(f) of the California Code of Regulations.

Issue: This policy notice is to describe the requirements for Access Compliance as required for exits, exit-ways, and areas of rescue assistance in all occupancies, except privately funded housing. Access regulations are applicable to all such projects, and do provide exceptions for hardship circumstances only when written findings justify those exceptions.

Resolution: All entrances must be accessible, but exit-only doors are treated separately by the California Building Code. In existing buildings, only the accessible entrance doors are required to be accessible and "egressable" for people with disabilities.

However, in new buildings, all exit only doors (doors without entry hardware) are required to be accessible and "egressable" for peoples with disabilities. There are three (3) exceptions:

1. Exits are exempt in buildings with fully supervised sprinkler systems.

2. Exits with a 1-hour protected area of rescue assistance are exempt.

3. Singular non-required (courtesy) exits more than 24 inches above or below adjacent grade which are posted "not accessible exit" are exempt.

Note that a "supervised sprinkler system" means a permanent relay notification system or other monitored system and does not include occasional oversight programs.

Approving Authority:

Michael J. Mankin, AIA
Manager, Access Compliance Program

Permits and Resurfacing, Repairing, and Alterations of Parking Lots

94-10

Effective 6-13-94

This policy is applicable to projects under DSA jurisdiction only. DSA's Access Compliance jurisdiction encompasses state-funded buildings, facilities and universities, as well as publicly-funded elementary schools, secondary schools, and community colleges. Local jurisdictions may or may not adopt similar methods of administering current code requirements, determining equivalent facilitation, or defining acceptable parameters as necessary in enforcing the existing California Building Standards Code as allowed under Government Code Section 4451(f) of the California Code of Regulations.

Issue: Permits are sometimes not required when parking lots undergo resurfacing, repairing and alterations. Because permits may not be required, a common misunderstanding is that compliance with Title 24 with regard to access is unnecessary.

Resolution: Even though permits are not always necessary for resurfacing, repairing, or alterations, compliance with the State Building Code is required and disabled parking must be provided. The effective date of the application of requirements is the date construction begins. The Building Officials' authority is recognized in Government Code 4450 and Health and Safety Code 19955.

> "Every existing public accommodation constructed prior to July 1, 1970, which is not exempted by Section 19956, shall be subject to the requirements of this chapter when any alterations, structural repairs or additions are made to such public accommodation …" (Health and Safety Code 19959.)
>
> "After the effective date of this section, any building or facility which would have been subject to this chapter but for the fact it was constructed prior to November 13, 1968, shall comply with the provisions of this chapter when alterations, structural repairs or additions, are made to such building or facility …" (Government Code 4456.)
>
> "Except as otherwise provided by law, buildings, structures, sidewalks, curbs, and related facilities subject to the provisions of this chapter or Part 5.5 (commencing with Section 19955) of Division 13 of the Health and Safety Code shall conform to the building standards published in the California Building Standards Code relating to access for the persons with disabilities and the other regulations adopted pursuant to Section 4450 that are in effect on the date of an application for a building permit. With respect to buildings, structures, sidewalks, curbs, and related facilities not requiring a building permit, building standards published in the California Building Standards Code relating to access for persons with disabilities and other regulations adopted pursuant to Section 4450, and in effect at the time construction is commenced shall be applicable." (Government Code 4451(c).)

Some jurisdictions adopt local ordinances requiring permits in order to manage this issue and monitor compliance. The Building Official can charge special inspection fees as neces-

sary for site inspections and is required to assume the responsibility for access whether or not the work is permitted.

Approving Authority:

Michael J. Mankin, AIA
Manager, Access Compliance Program

Accessibility Requirements for Seismic Safety Enhancement and Repair at School Sites with Damage

94-13

Effective 7-19-94

This policy is applicable to projects under DSA jurisdiction only. DSA's Access Compliance jurisdiction encompasses state-funded buildings, facilities and universities, as well as publicly-funded elementary schools, secondary schools, and community colleges. Local jurisdictions may or may not adopt similar methods of administering current code requirements, determining equivalent facilitation, or defining acceptable parameters as necessary in enforcing the existing California Building Standards Code as allowed under Government Code Section 4451(f) of the California Code of Regulations.

Issue: This policy notice is to describe the requirements for Access Compliance for expediting at all school seismic safety enhancement and repair projects at facilities damaged by seismic events and are undergoing mitigation work. Access regulations are applicable to all such projects, and do provide significant exceptions for hardship circumstances when written findings justify those exceptions.

Resolution: Seismic enhancement at schools and access obligations under the following types of projects: In 2, 3, and 4 below, there must be at least one accessible path of travel to a primary entrance from each pedestrian, vehicular, or transportation arrival point to accessible toilets within the area of work, or within 200 feet of the area of work. There must also be accessible toilets and restrooms within 200 feet if any exist. And, there must be accessible parking on an accessible route to the toilets if any exist.

1. Suspended ceiling, strengthening and ceiling restraint enhancement:

   Does not initiate accessibility obligations if, and only if, it's not a part of a larger structural repair project. If the work includes repair and/or replacement of primary or secondary structural systems, then access would be as required as described in number 2 below.

2. Skywalks that link buildings.

   Initiates accessibility for path of travel obligations to toilet rooms, parking, and other contingencies, but not to area of seismic work

3. Arcades and colonnades.

   Initiates accessibility for path of travel obligations to toilet rooms, parking, and other contingencies, but not to area of seismic work.

4. Covered outdoor, open air environments/shelters, (*e.g.* lunch shelters.)

   Initiates accessibility for path of travel obligations to toilet rooms, parking and other contingencies, but not to area of seismic work.

Approving Authority:

Michael J. Mankin, AIA
Manager, Access Compliance Program

Portable Classrooms: Existing Handrails on Existing Relocated Portables

94-16

Effective 8-18-94
Revised 3-15-00

This policy is applicable to projects under DSA jurisdiction only. DSA's Access Compliance jurisdiction encompasses state-funded buildings, facilities and universities, as well as publicly-funded elementary schools, secondary schools, and community colleges. Local jurisdictions may or may not adopt similar methods of administering current code requirements, determining equivalent facilitation, or defining acceptable parameters as necessary in enforcing the existing California Building Standards Code as allowed under Government Code Section 4451(f) of the California Code of Regulations.

Existing Regulatory Language

Issue: Alterations
Section 3112A. (a) General. All existing buildings and facilities, when alterations, structural repairs or additions are made to such buildings or facilities, shall comply with all provisions of Division I, New Buildings, except as modified by this division. These requirements shall apply only to the area of specific alteration, structural repair or addition and shall include those areas listed below:

i) A primary entrance to the building or facility and the primary path of travel to the **specific area of alteration**, structural repair or addition. [Emphasis added]

Resolution: This policy is for purposes of projects under DSA jurisdiction, and not for implementation beyond this jurisdiction. Relocated portables built and constructed prior to April 1, 1994 may have ramps with handrails meeting former code requirements, 30 inches to 34 inches above the surface of the ramp. New handrail heights are required to be provided 34 inches to 38 inches above the ramp - a range 4 inches higher than earlier code requirements. If the handrails are altered or added after April 1, 1994, then they must meet the new height requirements. However, if any portable classroom is relocated intact and placed on a new foundation system, and the existing handrails are not a specific area of alteration, they may remain at the existing height required by code at the time of original construction.

Approving Authority:

Michael J. Mankin, AIA
Manager, Access Compliance Program

Ramp Landing Clearances at Doors

94-18

Effective 9-9-94
Revised: 4-1-98

This policy is applicable to projects under DSA jurisdiction only. DSA's Access Compliance jurisdiction encompasses state-funded buildings, facilities and universities, as well as publicly-funded elementary schools, secondary schools, and community colleges. Local jurisdictions may or may not adopt similar methods of administering current code requirements, determining equivalent facilitation, or defining acceptable parameters as necessary in enforcing the existing California Building Standards Code as allowed under Government Code Section 4451(f) of the California Code of Regulations.

Issue: There appears to be a conflict in analyzing the requirements of Section 1133B.2.4.2 MANEUVERING CLEARANCES AT DOORS and Section 1003.3.4.4 ENCROACHMENT OF DOORS. The intent of the language is to provide safety and usability at restricted areas. Section 1133B.2.4.2 is applicable in corridors and other confined areas. Section 1003.3.4.4 is specific to ramps where an adequate landing of 42 inches is needed to prevent hazardous drop-offs from creating a dangerous situation. The required clearance at the top of ramps is 42 inches plus the door width if the door swings onto the landing and reduces the available area. This size landing often appears to be excessive in light of the requirements for corridors.

Resolution: The requirement of Section 1133B.2.4.2 is only applicable to corridor arrangements where hazardous drop-off is not an issue, and therefore, does not apply to ramps. The second provision, Section 1003.3.4.4 requires 42 inches plus door width measured from the door in any position to the drop-off edge or ramp. However, there are times when the ramp approaches the door landing from one direction only and the other sides of the landing are protected by a guardrail, thus reducing the drop-off hazard in that direction. In this case only, the maximum distance may be reduced to five feet in the direction of the door swing or twenty-four inches beyond the edge of the door opened at ninety (90) degrees, as with the requirements for doors opening into corridors.

Approving Authority:

Michael J. Mankin, AIA
Manager, Access Compliance Program

Alterations After Fire Damage

94-22

Effective 11-4-94

This policy is applicable to projects under DSA jurisdiction only. DSA's Access Compliance jurisdiction encompasses state-funded buildings, facilities and universities, as well as publicly-funded elementary schools, secondary schools, and community colleges. Local jurisdictions may or may not adopt similar methods of administering current code requirements, determining equivalent facilitation, or defining acceptable parameters as necessary in enforcing the existing California Building Standards Code as allowed under Government Code Section 4451(f) of the California Code of Regulations.

Issue: Traditionally, in fire repair work, most codes only require replacement of materials as built according to the codes in effect at the time of the original construction, and does not require the construction repair to comply with current code levels. Also, most code issues are normally confined to the fire damage area.

The State Building Standards Code and the federal Americans with Disabilities Act provisions require the scope of work to extend outside the fire damage area if it is necessary to provide accessible toilets, path of travel and parking.

Resolution: This policy is intended to discuss a change in scope effective April 1, 1994, promulgated by recent federal and state code changes adopted to address the requirements of the Americans with Disabilities Act of 1990. The U.S. Department of Justice has notified public entities including the Division of the State Architect that states cannot waive obligations to provide necessary accessible paths of travel, toilet rooms and parking beyond the scope of fire repair areas.

On the state funded school projects, the Office of Local Assistance which funds fire repair projects has been made aware that they must fund these additional requirements as a necessary part of projects they fund. Also, school district insurance policies generally apply only to the damaged area and additional insurance might be necessary for full coverage of needed work.

All other projects may also be underinsured for fire damage repairs. The law does not allow repairs without accessible toilets, path of travel and parking. The repair work must extend beyond the damaged area if it does not include all aspects of the required features.

Approving Authority:

Michael J. Mankin, AIA
Manager, Access Compliance Program

Alteration Projects under $25,000

95-01

Effective 1-11-95
Revised 10-1-98

This policy is applicable to projects under DSA jurisdiction only. DSA's Access Compliance jurisdiction encompasses state-funded buildings, facilities and universities, as well as publicly-funded elementary schools, secondary schools, and community colleges. Local jurisdictions may or may not adopt similar methods of administering current code requirements, determining equivalent facilitation, or defining acceptable parameters as necessary in enforcing the existing California Building Standards Code as allowed under Government Code Section 4451(f) of the California Code of Regulations.

Issue: There is no dollar value minimum threshold for exempting Access Compliance on small projects except for projects governed by the Field Act. In other words, no matter the cost, the accessibility requirements are initiated by minor (non-cosmetic) work.

Resolution: By law, Division of the State Architect, Access Compliance (DSA/AC), must review any and all work which affects path of travel, functional areas, gates, fences, outdoor surfaces, landscaping, grading, and signage, etc. On Field Act projects under $25,000 no review is required. On other state projects, you may fax or send us the information and drawings. If we do not agree with the general design of the project, we will request reduced drawings showing the work and will charge our hourly rate (presently $102.00 per hour) or a minimum $200.00 review fee, whichever is less, for the plan checking of architectural, structural, or civil plans. When compliance issues are resolved, you will be faxed the approval and the fee will be billed. Should the plans not appear complete, or if accessibility features are not indicated, then this office, prior to construction, must approve detailed review of all drawings and specifications.

Approving Authority:

Michael J. Mankin, AIA
Manager, Access Compliance Program

Single Room Occupancy - Hotels

95-02

Effective 11-17-95
Revised 10-1-98

This policy is applicable to projects under DSA jurisdiction only. DSA's Access Compliance jurisdiction encompasses state-funded buildings, facilities and universities, as well as publicly-funded elementary schools, secondary schools, and community colleges. Local jurisdictions may or may not adopt similar methods of administering current code requirements, determining equivalent facilitation, or defining acceptable parameters as necessary in enforcing the existing California Building Standards Code as allowed under Government Code Section 4451(f) of the California Code of Regulations.

Issue: Single room occupancy accommodations. The State Building Code does not include language specific to single room occupancy facilities operated as transient lodging but used as long term residences by some tenants. This unique sector of housing accommodations is, by some jurisdictions, required to meet the full accessibility requirements for hotels, but this often does not meet the needs of an elderly population desiring to live in the facility long term and make minor accessibility modifications. Also, if these buildings were to be regarded as residences, there would be only adaptable living accommodations, not immediately useable to someone arriving for short-term stay.

Resolution: In single-room occupancy accommodations, the Division of the State Architect has determined that the intent of providing access can be met by providing full compliance, as required for hotel accommodation, and the added requirement that all of the rooms, in addition to this, should be designed to meet the adaptability requirements for long term living accommodations. Although some single room occupancy facilities may not have cooking and food preparation facilities, and may only have congregate eating, rather than regarding them as dormitories they should be considered as single room occupancy hotels with approximately four percent (4%) fully accessible, with the balance meeting the adaptability requirements found in Chapter 11B, Section 1111B.5 which refers to Chapter 11A. Under our jurisdiction we do not treat these facilities as either, but as both hotel and dormitory.

For purposes of serving the needs of the elderly and disadvantaged, it is important to maintain the incentive for providing as many units as possible to meet the needs of an aging population.

Approving Authority:

Michael J. Mankin, AIA
Manager, Access Compliance Program

Residential Elevators in Commercial Buildings

95-05

Effective 5-1-95

This policy is applicable to projects under DSA jurisdiction only. DSA's Access Compliance jurisdiction encompasses state-funded buildings, facilities and universities, as well as publicly-funded elementary schools, secondary schools, and community colleges. Local jurisdictions may or may not adopt similar methods of administering current code requirements, determining equivalent facilitation, or defining acceptable parameters as necessary in enforcing the existing California Building Standards Code as allowed under Government Code Section 4451(f) of the California Code of Regulations.

Issue: There have been a number of requests from plan checkers and designers who would like to know exactly when and where Article 15 (residential) elevators can be used. Most importantly, Article 15 elevators are only allowable when there is an unreasonable hardship finding in writing granted by the official. It is important to note that the Division of Industrial Relations, Occupational Safety and Health Standards Board does not require a variance from their regulations to use an Article 15 elevator. However, their regulations do not detail accessibility requirements under Division of the State Architect jurisdiction. Therefore, the developer of architect needs a variance from the Division of the State Architect's regulations, which requires certain sizes for full service elevators. The official should allow an Article 15 elevator only when there is no other solution available within the scope of the project, without incurring disproportionate costs, or to provide access to small areas or where existing constraints allow no alternatives otherwise.

Resolution: An Article 15 elevator may be used in conjunction with the following features when there is a written unreasonable hardship. The size must be 48 inches deep by 36 inches minimum clear width and it must be a pass through design. Corner designs are not accessible unless they have a depth of 5 feet and at least a 42 inch wide door. This is normally required for an alcove arrangement in the code. These corner lifts are generally considered inaccessible even with all the features detailed here in this section, and should be used only where existing buildings allow no other alternative.

In addition to a pass through design, the door must be 32 inches clear, and in the car there must be a wand or other reaching devise on a chain to allow a right-handed person to reach the control on the left hand side, or to allow a left-handed person to reach the control on the right hand side. A wand is not needed if there are accessible controls on both sides. A key must be required in certain circumstances where security and safety are significant issues.

The problem with a key is that it is generally required by recognized national standards. However, it does seem to be contrary to a mandate in the ADA for unassisted access and egress. Inside the car the controls must be located at the proper height, as for commercial elevators, with the Braille and raised letters, white letters on black background, and must have the symbols as required in the code for commercial elevators. Also, there must be a phone in the car, as required by the code.
Any key in the car must be chained and constantly available in the car, or the elevator itself must have the key permanently installed in the lock and the elevator must be powered on in the morning when the building is opened, and if necessary, power turned off when the build-

ing is closed in the evening. Therefore, the key must be readily available at all times.

It should be emphasized that the operation of the controls must be a single operation. It cannot require constant pressure on a key to activate the buttons. There must be a power opening car gate. This means that no scissors gate, or other pinching or shearing type of gate design shall be used. It may be a celluloid type of panel that goes into a pocket along the side of the car, or it can be an accordion type gate with a vinyl envelope, so that there's no possibility of pinching or shearing. Also, the car gate must be either arranged in a way to allow gravity to close the gate, or be a power closing car gate.

Outside the car there must be a power opening hoistway door with a slow close closer on it that would not have a pressure exceeding 5 pounds maximum at any point. This power opening hoistway door device should not defeat the interlock. Outside the elevator there must be raised letters in Braille, on the latch side raised letters where the jam would be, and these must be arrow lanterns, car call buttons and clearances as required for commercial elevators.

It should be emphasized that these residential elevators should only be used to access minor areas, such as lofts, projection rooms in schools and other locations where the occupancy is rather small. DSA/AC is inclined to endorse using it for areas larger than 400 square feet. However, each situation will be looked at separately. Also, it is possible to protect the historic fabric in some buildings where this is necessary and an Article 15 elevator is often a great solution in existing buildings where the superstructure of the existing building cannot manage incorporation of a full commercial elevator.

An Article 15 elevator should not be used as a primary path of travel unless it is absolutely necessary. These elevators generally cost about $40,000 to $60,000 dollars. Therefore, any project over $300,000 of construction cost would normally be able to incorporate an elevator of this caliber if there was a hardship. Otherwise, if the project scope of work exceeds $500,000, then a commercial elevator would probably be regarded as the appropriate solution and a hardship for disproportionate cost should not be allowed. In that case, a commercial elevator would be the reasonable solution.

Approving Authority:

Michael J. Mankin, AIA
Manager, Access Compliance Program

Home Business Accessibility

95-06

Effective 6-1-95
Revised 10-1-98

This policy is applicable to projects under DSA jurisdiction only. DSA's Access Compliance jurisdiction encompasses state-funded buildings, facilities and universities, as well as publicly-funded elementary schools, secondary schools, and community colleges. Local jurisdictions may or may not adopt similar methods of administering current code requirements, determining equivalent facilitation, or defining acceptable parameters as necessary in enforcing the existing California Building Standards Code as allowed under Government Code Section 4451(f) of the California Code of Regulations.

Issue: Home business in Group R Occupancy must be accessible. The State Building Code requires "adaptable" accessibility in long-term living accommodations. Should "home business" areas be required to comply with accessible features?

Resolution: Under federal civil rights law, home business operations are required to make "readily achievable" changes in public-only areas on an ongoing basis by Americans With Disabilities Act (ADA) Title III. It is the determination of DSA that "home business," for purpose of access requirements, is not a "public accommodation," and that accessibility in these environments is more appropriately a civil rights obligation allowing programmatic solutions rather than prescriptive building requirements.

Approving Authority:

Michael J. Mankin, AIA
Manager, Access Compliance Program

Seismic Upgrade In Hospitals

95-07

Effective 8-1-95

This policy is applicable to projects under DSA jurisdiction only. DSA's Access Compliance jurisdiction encompasses state-funded buildings, facilities and universities, as well as publicly-funded elementary schools, secondary schools, and community colleges. Local jurisdictions may or may not adopt similar methods of administering current code requirements, determining equivalent facilitation, or defining acceptable parameters as necessary in enforcing the existing California Building Standards Code as allowed under Government Code Section 4451(f) of the California Code of Regulations.

Issue: Hospitals and medical facilities undergoing seismic alterations. Whereas seismic enhancement of existing buildings is considered alteration work, as determined by this office and confirmed in the latest Attorney General Opinion (attached), the code requires that all new alteration work comply with the current access requirements, and that a path of travel to the areas of new work, including accessible toilets, parking and other contingencies which serve that area of work, must also be accessible. Although the code is very specific about what amount of work must be done on projects under the cost threshold identified in Section 1134B.2.1, Exception 1, it does not specify the limit of accessible toilets where several types of toilets serve the area of remodel. This policy intends to provide appropriate scoping to those hospital or medical facilities projects undertaking seismic repair or enhancement.

Resolution: When hospitals are seismically enhanced or upgraded, or when alteration work is for the purpose of seismic repair, the view of this office is that the entire building is being enhanced, and that there is no specific area of alteration if that seismic repair does not substantially redefine the primary functions or spaces within the building. In other words, adding structural steel, shear wall, ties and so forth, are items that do not in any way encompass accessibility issues. However, it is the view of this office that such seismic enhancement of the building extends its useful life for many years and should be to the benefit of persons with disabilities.

Therefore, although this office does not consider there to be a specific area of alteration, the other part of the obligation in alteration work is to provide accessible contingencies that serve the building. In the case of hospitals, there are many functions that benefit from this seismic function enhancement and toilet rooms are generally available in relationship to the various functions throughout the building. Therefore, when such work is undertaken, minimally this office will accept male and female separate toilet facilities for three classes of individuals in hospital alteration work: employees' toilet rooms, visitors' toilet rooms and patient toilet rooms.

The location of accessible toilets to be upgraded may be determined by the architect in charge of the project, and it is hoped that those toilet rooms that will serve the greatest number of people in the greatest variety of functions will be selected. Path of travel to those toilet rooms is also required, but exceptions for existing constraints, existing elevator shafts, existing structural constraints and other reasonable hardships will be allowed in the required accessible path to those toilet rooms. In addition, drinking fountains and telephones avail-

able to those three classes of occupants of the building shall also be made fully accessible. Parking, if provided, shall also be made accessible to serve those three classes of individuals.

Approving Authority:

Michael J. Mankin, AIA
Manager, Access Compliance Program

Attachment to Policy 95-07:

[TO BE PUBLISHED IN THE OFFICIAL REPORTS]
[OFFICE OF THE ATTORNEY GENERAL]
[State of California]
[DANIEL E. LUNGREN]
[Attorney General]

"OPINION *of DANIEL E. LUNGREN, Attorney General*
CLAYTON P. ROCHE, *Deputy Attorney General"*

"No. 94-1109"
"May 10, 1995"

THE HONORABLE BRUCE McPHERSON, MEMBER OF THE CALIFORNIA ASSEMBLY, has requested an opinion on the following question:

"Does the seismic strengthening of an unreinforced masonry building required by local ordinance constitute a "building alteration, structural repair or addition" for purposes of providing access for disabled persons?"

CONCLUSION

The seismic strengthening of an unreinforced masonry building required by local ordinance constitutes a "building alteration, structural repair or addition" for purposes of providing access to the building for disabled persons.

ANALYSIS

This request for our opinion involves the requirements for providing access to public buildings for disabled persons as set forth in sections 4550-4558 of the

Government Code[1] and administered by the State Architect. Section 4450 provides:

(a) It is the purpose of this chapter to ensure that all buildings, structures, sidewalks, curbs, and related facilities, constructed in the state by the use of state, county, or municipal funds, or the funds of any political subdivision of the state shall be accessible to and useable by persons with disabilities. The State Architect shall develop and submit proposed building standards to the California Building Standards Commission for approval and adoption . . . and shall develop other regulations for making buildings, structures, sidewalks, curbs, and related facilities accessible to and useable by persons with disabilities. The regulations and building standards relating to access for persons with disabilities shall be consistent with the standards for buildings and structures which are contained in pertinent provisions of the latest edition of the Uniform Building Code . . . and these regulations and building standards shall contain additional requirements relating to buildings, structures, sidewalks, curbs, and other related facilities as the State Architect determines are necessary to assure access and usability for persons with disabilities . . .

(b) However, in no case shall the State Architect's regulations and building standards prescribe a lesser standard of accessibility or usability than provided by the Accessibility Guidelines prepared by the federal Access Board as adopted by the United States Department of Justice to implement the Americans with Disabilities Act of 1990 (Public Law 101-336).

Subdivision (d) of section 4451 provides:

Until building standards are published in the California Building Standards Code and other regulations are developed by the State Architect and adopted by the California Building Standards Commission pursuant to Section 4450, buildings, structures, sidewalks, curbs, and related facilities subject to the provisions of this chapter or Part 5.5 (commencing with Section 19955) of Division 13 of the Health and Safety Code shall meet or exceed the requirements of Title III of Subpart D of the Americans with Disabilities Act of 1990.[2]

The disability access requirements are applicable to existing public buildings "when alterations, structural repairs or additions are made." Section 4456 states:

". . . any building or facility which would have been subject to this chapter but for the fact it was constructed prior to November 13, 1968, shall comply with the provisions of this chapter when alterations, structural repairs or additions are made to such building or facility. This requirement shall only apply to the area of specific alteration, structural repair or addition and shall not be construed to mean that the entire structure or facility is subject to this chapter. "

By regulation the State Architect requires compliance with the disability ac-

cess requirements at the time of "renovation, structural repair, alteration and additions to existing buildings . . . ." (Cal. Code Res., tit. 24, § 3109A.) Thus the access requirements are imposed upon the owners of existing public buildings only when construction is underway and the opportunity to mitigate deficiencies is at hand. (See Cal. Code Regs., tit. 24, § 110.) Also, certain exceptions are allowed with respect to historic buildings (Cal. Code Regs., tit. 24, §§ 8-1300—8-1306), elevators (Cal. Code Regs., tit. 24, § 5103), and a monetary limitation is placed upon the amount required to be spent to correct any deficiencies (Cal. Code Regs., tit. 24, § 3112). A general statutory exemption to the literal requirements is authorized "when it is clearly evident that equivalent facilitation and protection are thereby secured." (§ 4451, subd. (f).)

The applicable definitions in the regulations governing earthquake design specify in relevant part:

ADDITION means any work which increases the floor or roof area or the volume of enclosed space of an existing building and is dependent on the structural elements of that facility for vertical or lateral support.

ALTERATION means any change in an existing building which does not increase and may decrease the floor or roof area or the volume of enclosed space.

STRUCTURAL REPAIRS are any changes affecting existing or requiring new structural elements primarily intended to correct the effects of deterioration or impending or actual failure, regardless or cause." (Cal. Code Regs., tit. 24, § 2331.)

On February 8, 1994, the State Architect issued Policy No. 94-01, reaffirming his 1991 administrative determination that the seismic strengthening of an unreinforced masonry building would constitute a "building alteration, structural repair or addition" for purposes of providing access to the building for disabled persons. We are asked whether the State Architect's administrative determination is correct. We conclude that it is.

In 61 Ops.Cal.Atty.Gen. 555 (1978), we construed the language of section 4556 as it applied to a city library at the time its front porch and walkway were restored and modernized. We concluded that section 4556 required the restored area to be made accessible to and usable by disabled persons. With respect to whether the modifications constituted "alterations, structural repairs or additions" within the meaning of the statute, we stated :

An 'alteration' is a change or modification in construction (Webster's Internat. Dict. (3d ed. 1966) p. 63; U. Bldg. Code (12973) § 402, p. 36); a 'structural repair' is a reconstruction or renewal of an essential element of a facility for the purpose of its maintenance (Webster's New Internat. Dict. (3d ed. 1966) pp. 1923,

2266; U. Bldg. Code (1973) § 419, p. 42); an 'addition' is an extension by joining the one thing to another (Webster's New Internat. Dict. (3d ed. 1966) p. 24; U. Bldg. Code (1973) § 402, p.36).

The facilities in question have been changed in a material manner, not merely restored to their original condition. We are not concerned here with simple maintenance, such as the patching of cracks in the steps. Moreover, these front entrance facilities are not ornamental in nature but are essential to the use of the library. Covering the facilities with concrete and increasing the number of steps thus constitute construction modifications of essential elements (with the addition of the side handrails) for the purpose of providing safe access to the general public.

Taken as a whole, we conclude that these modifications to the library's front entrance facilities come within the meaning of 'alterations, structural repairs or additions' as those terms are used in section 4456." (Id. at p. 557.)

In 76 Ops.Cal.Atty.Gen. 130 (1993), we examined the requirements of the federal Americans with Disabilities Act of 1990 to public buildings in California. We stated in part:

The Americans With Disabilities Act of 1990 (Pub.L. No. 101-336; 42 U.S.C. § 12101, et seq.; hereafter "ADA") was enacted by Congress as a civil rights statute to deal with the discrimination against individuals with disabilities in the areas of employment (Title I), public services (Title II), and in the construction or alteration of places of public accommodation or commercial facilities (Title III). Unlawful discrimination occurs under Title III when a private party designs and constructs a new public accommodation or commercial facility, or alters an existing one, and fails to make the facility 'readily accessible to and useable by individuals with disabilities.' (§ 303.) Title III is implemented by regulations issued by the United States Attorney General (§ 306(b)), and the standards included in the regulations are required to be consistent with the minimum guidelines and requirements promulgated by the Architectural and Transportation Barriers Compliance Board (§ 306(b)).

. . .Government Code section 4450 ensues 'that all buildings, structures, sidewalks, curbs, and related facilities, constructed in this state by the use of state, county, or municipal funds, or the funds of any political subdivision of the state shall be accessible to and useable by individuals with disabilities.' Under this statute the State Architect has adopted regulations and building standards necessary to assure access to and usability of public buildings by individuals with disabilities. The same regulations are made applicable by Health and Safety Code sections 19955 and 19956 to public accommodations or facilities constructed with private funds. Chapter 913 added the directive with respect to these statutes that 'in no case shall the State Architect's regulations and build-

ing standards prescribe a lesser standard of accessibility of usability than provided by regulations of the Federal Architectural and Transportation Barriers Compliance Board adopted to implement the Americans With Disabilities Act of 1990.' (Gov. Code, § 4450, subd. (b).)" (Id., at pp. 131-133, fns. omitted.)"

The regulations mentioned in our 1993 opinion that were issued by the United States Attorney General implementing the federal access requirements provide in part as follows:

(a) General. (1) Any alteration to a place of public accommodations or a commercial facility, after January 26, 1992, shall be made so as to ensure that, to the maximum extent feasible, the altered portions of the facility are readily accessible to and usable by individuals with disabilities, including individuals who use wheelchairs.

(2) An alteration is deemed to be undertaken after January 26, 1992, if the physical alteration of the property begins after that date.

(b) Alteration. For the purposes of this part, an alteration is a change to a place of public accommodation or a commercial facility that affects or could affect the usability of the building of facility or any part thereof.

(1) Alterations include, but are not limited to, remodeling, renovation, rehabilitation, reconstruction, historic restoration, changes or rearrangement in structural parts or elements, and changes or rearrangement in the plan configuration of walls and full-height partitions. Normal maintenance, reroofing, painting or wallpapering, asbestos removal, or changes to mechanical and electrical systems are not alterations unless they affect the usability of the building or facility.

(2) If existing elements, spaces, or common areas are altered, then each such altered element, space, or area shall comply with the applicable provisions of appendix A to this part.

(c) To the maximum extent feasible. The phrase 'to the maximum extent feasible,' as used in this section, applies to the occasional case where the nature of an existing facility makes it virtually impossible to comply fully with applicable accessibility standards through a planned alteration. In these circumstances, the alteration shall provide the maximum physical accessibility feasible. Any altered features of the facility that can be made accessible shall be made accessible. If providing accessibility in conformance with this section to individuals with certain disabilities (e.g., those who use wheelchairs) would not be feasible, the facility shall be made accessible to persons with other types of disabilities (e.g., those who use crutches, those who have impaired vision or hearing, or those who have other impairments)." (28 C.F.R. § 36.402 (1994).)

We agree with the State Architect that the seismic strengthening of an

unreinforced masonry building constitutes a "building alteration, structural repair or addition" for purposes of providing access to the building for disabled persons. Seismic strengthening is structural, not cosmetic or decorative. Undeniably, it goes beyond normal maintenance; its purpose is to affect the basic usability of the building itself. In comparison to federal law, California law provides equal if not greater access for disabled persons. (§§ 4450-4451.) Seismic strengthening constitutes an "alteration" under federal law. (28 C.F.R. § 36.402 (1994).) The State Architect's imposition of access requirements for the seismic strengthening of unreinforced masonry buildings is thus consistent with the federal statutory scheme and implementing regulations.

Moreover, as the public official charged with implementing the state legislation in question, the State Architect's interpretation of section 4556 with respect to seismic strengthening is entitled to great weight. (See Norman v. Unemployment Ins. Appeals Bd. (1983) 34 Cal.3d 1, 8: In Re Kelly (1983) 33 Cal.3d 267, 277; Adamson v. Department of Social Services (1988) 207 Cal.App.3d 14, 22.)

Accordingly, we conclude that the seismic strengthening of an unreinforced masonry building required by local ordinance constitutes a "building alteration, structural repair or addition" for purposes of providing access to the building for disabled persons.

FOOTNOTES:

[1] *All references hereafter to the Government Code are by section number only.*

[2] *We note that sections 4450-4458 are applicable not only to public buildings, but also "public accommodations or facilities constructed in this state with private funds." (Health & Saf. Code, §§ 19952-19954, §§ 19995-19999; see generally City and County of San Francisco v. Grant Co. (1986) 181 Cal.App.3d 1085; People Ex Re. Deukmejian v. CHE, Inc. (1983) 150 Cal.App.3d 123; Marsh v. Edwards Theatre Circuits, Inc. (1976) 64 Cal.App.3d 881.)*

Counters – Food Preparation Facilities

95-08

Effective 9-1-95

This policy is applicable to projects under DSA jurisdiction only. DSA's Access Compliance jurisdiction encompasses state-funded buildings, facilities and universities, as well as publicly-funded elementary schools, secondary schools, and community colleges. Local jurisdictions may or may not adopt similar methods of administering current code requirements, determining equivalent facilitation, or defining acceptable parameters as necessary in enforcing the existing California Building Standards Code as allowed under Government Code Section 4451(f) of the California Code of Regulations.

Issue: Food sales facilities with service counters. There are many types of food preparation areas in sales facilities serving the general public where sandwiches are made, food is prepared and food is offered for sale. Salad bars, food lines, and over the counter pick-up areas are often provided as areas where food is offered for sale or for delivery. There is very little tradition in this industry of providing accessible height counters in the commercial equipment used to prepare and/or serve food.

Resolution: In food preparation facilities, food sales facilities, and other areas where the public accommodation includes a counter for purposes of food delivery, food selection and/or payment transaction counters, those areas must provide five percent (5%) of the accessible counter length or at least 36 inches of accessible counter length, whichever is greater. The maximum height shall be no more than 34 inches above the finish floor. In addition, all tray slides shall be provided at 34 inches maximum and all informational signage shall be provided as required by the State Building Code. In projects under our jurisdiction, there will be no exceptions without a written finding of unreasonable hardship based on legal or physical constraints, or existing conditions, but not operational constraints. It should be emphasized that proper sneeze guards complying with the attached drawing allows a lowered counter without the need to eliminate the food preparation area immediately beyond the accessible area.

Approving Authority:

Michael J. Mankin, AIA
Manager, Access Compliance Program

Accessible Seating At Service Counters

95-09

Effective 10-31-95

This policy is applicable to projects under DSA jurisdiction only. DSA's Access Compliance jurisdiction encompasses state-funded buildings, facilities and universities, as well as publicly-funded elementary schools, secondary schools, and community colleges. Local jurisdictions may or may not adopt similar methods of administering current code requirements, determining equivalent facilitation, or defining acceptable parameters as necessary in enforcing the existing California Building Standards Code as allowed under Government Code Section 4451(f) of the California Code of Regulations.

Issue: Scenario 1 - New Construction: Title 24 requires 5% and not less than 36 inches in length of a lowered area for wheelchair access; if the bar is longer than 60 feet, then obviously 5% of that length will need to be more than 36 inches long. Note that seating for one at a lowered section probably does not offer equal opportunity to sit shoulder to shoulder and converse with others. Therefore, we suggest that lowered seating should accommodate more than one person in order to fully address the intent of statutes in the Health and Safety Code calling for equal opportunity.

Alternatively for existing bars and counters, DSA/AC will accept equivalent facilitation, and allow an adjacent area with similar architecture and case work of the bar to be built in nearby proximity to the bar. We suggest a mini version of the bar at a lower height with the same ambience, the same case work design, the same architecture, and the same service.

Scenario 2 - Existing Bar: Some of the existing bars may have historical fabric, which would allow you to use the State Historical Building Code. One could leave historic bars alone and provide a matching accommodation as described above. In other existing bars non-historical, plan review staff will allow the above situation for a matching sit-down bar when alterations of the existing bar are extremely difficult.

Resolution: In general, new bars should be designed in a new way with a section that is lowered for several people at one end, to provide equal opportunity for disabled colleagues and their able-bodied friends to enjoy the same public accommodation as anyone else. Table service, which has been an acceptable alternative in the past in California, and which is still an acceptable alternative in federal ADA requirements, is no longer an option nor is it permissible in California on projects submitted for permit after April 1, 1994.

Approving Authority:

Michael J. Mankin, AIA
Manager, Access Compliance Program

Dsa Seismic Policy On Seismic Upgrade Projects

96-01

Effective 1-18-96

This policy is applicable to projects under DSA jurisdiction only. DSA's Access Compliance jurisdiction encompasses state-funded buildings, facilities and universities, as well as publicly-funded elementary schools, secondary schools, and community colleges. Local jurisdictions may or may not adopt similar methods of administering current code requirements, determining equivalent facilitation, or defining acceptable parameters as necessary in enforcing the existing California Building Standards Code as allowed under Government Code Section 4451(f) of the California Code of Regulations.

Issue: If buildings are structurally damaged by seismic event, or when their condition requires seismic upgrade and retrofit work, it has been the opinion of the Attorney General for the State of California that accessibility is required.

Resolution: The first category is the California Construction Law requirements with regard to construction requirements to provide physical accessibility to buildings when they undergo alteration or seismic repair. There are two requirements for this type of alteration work: (1) the work must comply with the current code requirements for access, (2) there must be a path of travel to toilets which serve the area of alteration. In seismic work the entire building is considered to be the area of alteration work. However, if the seismic upgrade work does not alter the primary use or function of the building, **AND/OR** does not alter the design of rooms and spaces, then it does not trigger path of travel obligation to area of seismic upgrade. If there are areas of alteration of spaces, then there must be path of travel to those areas of altered spaces, as in any existing alteration project designed for accessibility.

The other most significant category for access work is civil rights issues, which require public entities to offer equal opportunity in programs offered by those agencies. The requirements require a survey of all deficiencies and an upgrade of those deficiencies, as may be necessary to deliver equal opportunity in programs offered by the public entity.

The Division of the State Architect does not enforce civil rights issues. They are enforced by the U.S. Department of Justice, and it is also enforced by California Statute through the courts. Both state and federal civil rights issues are not considered to be part of plan review work through this office.

Note: If the question arises whether or not the project meets all ADA requirements, the answer would be **no**, because although we are meeting the accessibility requirements for alteration, we are not taking on all of the programmatic obligations of the agency who owns the facility. But if the question was 'does this project meet State Building Code requirements, or Title 24 requirements', the answer would be **yes**, because we would be providing in these projects a single path of travel to toilets that serve the building.

Accessibility Requirements Identified on the Occupancy Basis

All Occupancies: A primary entrance to the building or facility and the primary path of travel to specific area of alterations as follows:

1. any remodeled area which alters an accessibility issue (changes to door widths, corridor widths, path of travel clearances, or room remodels where the layout of the room is changed in a way that affects accessibility);

2. an accessible route to the altered area described above;

3. at least one accessible restroom for each sex as outlined in the occupancy descriptions below;

4. accessible telephones;

5. accessible drinking fountains; and

6. when possible, additional accessible elements such as storage and alarms.

Group A Occupancies. These facilities generally have toilet rooms provided for the general public and may have separate toilet facilities for employees only. In these occupancies, two pair (men & women) toilet rooms are required for the facility; one pair for general public and the second pair, if separate, toilet facilities for employees only are provided, unless all of the employees are using the same facilities as the general public.

Group B Occupancies. These facilities generally have toilet rooms provided for the general public and may have separate toilet facilities for employees only. In these occupancies, two pair (men & women) toilet rooms are required for these facilities; one pair for general public and the second pair, if separate, toilet rooms for employees only are provided, unless employees are using the same facilities as the general public.

Group E Occupancies. Often require separate facilities for staff, children, or students, and toilet facilities for guests or the visiting public. A pair of toilets for each of these uses must be made accessible.

Group F Occupancies. These tend to be employee only areas. If there are employee only toilets, a pair of toilets must be provided that are accessible for employees, and a pair of toilets must be provided for the visiting public, if such toilet facilities are provided.

Group H Occupancies. These tend to be employee only areas. If there are employee only toilets, a pair of toilets must be provided that are accessible for employees, and a pair of toilets must be provided for the visiting public.

Group I Occupancies, Hospitals. These often have many disabled patients. A pair of toilets is required for the staff. A pair of toilets, male and female, are required for guests or the visiting public, and a pair of toilets or a unisex toilet must be provided on each floor of hospitals and other Group I Occupancies.

Group M Occupancies. A pair of toilets must be accessible if they are available for the general public and employees.

Group R Occupancies. In hotels and apartments, if there are common restrooms, they must be accessible for both male and female visitors, and individual toilet rooms serving units that are accessible or adaptable, must be made accessible according to Table 11B-4 and 11B-5. All ground floor units, or all of the units closest to grade must be made adaptable.

Group S Occupancies. If there are toilets provided, then a pair of toilets shall be accessible to persons with disabilities.

Group U Occupancies. Generally there is no requirement, unless those occupancies are used for educational or recreational use. In that case, if there are separate toilets for employees, then a pair of those must be accessible. If there are toilets provided for the guests or visiting public, a pair of those toilets must also be accessible.

For further discussion of the above listed types of buildings, on a case-by-case basis, please contact the Access Compliance Policy and Code Development Unit.

Elevators in Buildings. All elevators must be posted in braille as accessible elevators if they are required to provide access to accessible restrooms. Otherwise, only one elevator is required to be accessible in a bank of elevators, as long as it is posted as the only accessible elevator, and the elevator has a dedicated use for persons with disabilities.

Historic Buildings. The Historical Building Code allows alternative accessibility solutions on a case-by-case basis.

Note 1: For all occupancies, accessible toilets are preferred to be closest to the main lobby or main entrance of the building. With the exception of Group I Occupancies, Hospitals, accessible patient toilets must be provided on each floor. Visitor toilets are preferred to be closest to the main lobby or main entrance.

Note 2: New work beyond seismic will initiate new codes.

Approving Authority:

Michael J. Mankin, AIA
Manager, Access Compliance Program

Elevator Call Buttons-Mounting Height

96-04

Effective 6-11-96

This policy is applicable to projects under DSA jurisdiction only. DSA's Access Compliance jurisdiction encompasses state-funded buildings, facilities and universities, as well as publicly-funded elementary schools, secondary schools, and community colleges. Local jurisdictions may or may not adopt similar methods of administering current code requirements, determining equivalent facilitation, or defining acceptable parameters as necessary in enforcing the existing California Building Standards Code as allowed under Government Code Section 4451(f) of the California Code of Regulations.

Issue: The California Building Code, Title 24, Section 3003.4.9a requires that elevator call buttons be located within 42 inches of the floor. In a typical field installation the low voltage wiring hook ups are pulled into a junction box that is often secured or cast into the rough framing substrate at 42 inches always before the finish is applied and the button system is connected. Consequently, the **up call button**, which is mounted vertically and is located a few inches higher than the previously located 42 inch high rough framed junction box.

Resolution: DSA/ACS has reasoned that the connection junction box should be located within 42 inches of the finish floor and that the **up call button** be located center-lined at 48 inches maximum above finish floor. This forward approach is within specified reach limits and meets the intent of the California Access Code, and will not deny access to anyone.

Approving Authority:

Michael J. Mankin, AIA
Manager, Access Compliance Program

Fire Repair Construction

96-06

Effective 7-15-96

This policy is applicable to projects under DSA jurisdiction only. DSA's Access Compliance jurisdiction encompasses state-funded buildings, facilities and universities, as well as publicly-funded elementary schools, secondary schools, and community colleges. Local jurisdictions may or may not adopt similar methods of administering current code requirements, determining equivalent facilitation, or defining acceptable parameters as necessary in enforcing the existing California Building Standards Code as allowed under Government Code Section 4451(f) of the California Code of Regulations.

Issue: A primary entrance to the building or facility and the primary path of travel to the specific area of alteration, structural repair or addition, including sanitary facilities, drinking fountains and public telephones serving the area.

(Note there some minor exceptions.)

Resolution: This notice is intended to emphasize a change in scope for the California Building Code effective April 1, 1994, promulgated by recent federal and state code changes adopted to address the requirements of The Americans with Disabilities Act of 1990. The U.S. Department of Justice has notified public entities including the Division of the State Architect that states cannot wave obligations to provide necessary accessible paths of travel, toilet rooms and parking beyond the scope of fire repair areas.

Traditionally, most codes only require replacement of materials as built according to the codes in effect at the time of the original construction, and do not require the construction repair to comply with current code levels. Also, most code issues are normally confined to the fire damaged areas in schools and as well as privately funded projects. However, the California Building Code and federal Americans with Disabilities Act provisions will require the scope of work to extend outside the fire damaged area if it is necessary to provide accessible toilets.

On state-funded school projects, the Office of Local Assistance that funds fire repair projects have been notified that it must fund these additional requirements as a necessary part of projects it funds. Also, school district insurance policies generally apply only to the damaged area and additional insurance might be necessary for full coverage of needed work.

Approving Authority:

Michael J. Mankin, AIA
Manager, Access Compliance Program

Handrails At Steps

96-10

Effective 2-13-96
Revised 12-30-96

This policy is applicable to projects under DSA jurisdiction only. DSA's Access Compliance jurisdiction encompasses state-funded buildings, facilities and universities, as well as publicly-funded elementary schools, secondary schools, and community colleges. Local jurisdictions may or may not adopt similar methods of administering current code requirements, determining equivalent facilitation, or defining acceptable parameters as necessary in enforcing the existing California Building Standards Code as allowed under Government Code Section 4451(f) of the California Code of Regulations.

Issue: The definition of 'Stairway' is:

> **STAIRWAY. Two or more risers shall constitute a stairway.**

Since handrails are required by code for 'stairways', it appears that there is no requirement for single steps. Model code does not address accessibility at single step conditions.

Resolution: The Division of the State Architect, (DSA/AC), must review any and all work which effects accessibility for path of travel, functional areas, outdoor gates, fences, outdoor surfaces, landscaping, and grading. Government Code 4450 requires compliance with the Americans with Disabilities Act Accessibility Guidelines until minimum standards are adopted. Therefore, in order to meet State legislative mandates to approve plans meeting the intent of Gov. Code 4450, DSA/AC does require handrails at single step conditions where path of travel to new work is required to be accessible.

Approving Authority:

Michael J. Mankin, AIA
Manager, Access Compliance Program

Unisex Restrooms

97-01

Effective 1-17-97

This policy is applicable to projects under DSA jurisdiction only. DSA's Access Compliance jurisdiction encompasses state-funded buildings, facilities and universities, as well as publicly-funded elementary schools, secondary schools, and community colleges. Local jurisdictions may or may not adopt similar methods of administering current code requirements, determining equivalent facilitation, or defining acceptable parameters as necessary in enforcing the existing California Building Standards Code as allowed under Government Code Section 4451(f) of the California Code of Regulations.

Issue: Where separate toilet facilities are available for the general public, separate facilities shall be made available for persons with disabilities. However, sometimes there are grounds for unreasonable hardships in existing buildings. In alteration projects in existing buildings, some projects are eligible for unreasonable hardship consideration due to legal or physical constraints. One of the solutions available is to allow limited use toilets when hardships are granted by the building official. Such unreasonable hardship toilet compartments have been illustrated in the building code as front-transfer or side-transfer arrangements. Generally, these provide some access for persons with disabilities who are not severely limited in mobility. These designs are often used in male and female toilet rooms so that some access can be provided where separate facilities are offered.

DSA has had many comments from the disabled community preferring a fully accessible unisex toilet room rather than separate sex partially accessible toilet rooms. In high rise construction, back-to-back male and female toilets may occur on every floor. It seems more practical to provide a pair of fully accessible toilets when clearly possible and, on projects where hardship is granted due to legal or physical constraints, DSA would prefer to approve unisex toilets as they provide greater usability for persons with disabilities.

Resolution: Only on projects where the building official grants an unreasonable hardship, and where front-transfer or side-transfer toilets would be considered an option, DSA will accept unisex fully accessible toilets as equivalent to a pair of partially accessible arrangements. Unisex toilets will be permitted where full code compliance is technically infeasible, after the effective date of the 1999 amendments to the CA Building Code.
NOTE 1: Currently, accepting unisex toilets as equivalent to fully accessible separate toilet compartments is not appropriate for new construction or alteration without unreasonable hardship.

NOTE 2: Labor code issues may require separate facilities within a reasonable distance when there are four or more employees serving a business.

Approving Authority:

Michael J. Mankin, AIA
Manager, Access Compliance Program

Permit Extensions

97-02

Effective 4-29-97
Revised 4-5-00

This policy is applicable to projects under DSA jurisdiction only. DSA's Access Compliance jurisdiction encompasses state-funded buildings, facilities and universities, as well as publicly-funded elementary schools, secondary schools, and community colleges. Local jurisdictions may or may not adopt similar methods of administering current code requirements, determining equivalent facilitation, or defining acceptable parameters as necessary in enforcing the existing California Building Standards Code as allowed under Government Code Section 4451(f) of the California Code of Regulations.

Issue: Some projects under the jurisdiction of Access Compliance have been approved in the past and are eligible for extensions. Certain projects were approved prior to implementation of the Americans with Disabilities Act regulations. Those remodel projects permitted before January 26, 1992, and those new projects submitted prior to January 26, 1993, were permitted prior to implementation of federal regulations relating to accessibility. Essentially, the US Department of Justice has indicated to DSA that those projects are "grandfathered-in", and do not have to meet ADA requirements.

Access Compliance incorporated more restrictive federal accessibility requirements into the State Building Code through rulemaking changes effective April 1, 1994. Projects submitted after this date may be allowed extensions without code upgrades.

Some projects were submitted and approved by DSA in the window period between implementation of federal regulations and enforcement effective dates for DSA "new ADA language." This window period may include projects that were plan reviewed to higher federal standards as a courtesy to the architect, yet were not enforceable by DSA/AC under state law. Some architects did not want to comply with higher federal standards and chose to be responsible for those unenforceable issues.

Resolution: Existing projects submitted to Access Compliance during a window period beginning from January 26, 1992, or if new construction, January 26, 1993, and ending April 1, 1994, need to be examined by Access Compliance plan checkers to verify compliance with higher federal standards now in effect before extensions to the permit may be granted. Most projects were approved to the higher standards of either state or federal law, however, now must be required to change to incorporate ADA standards. DSA/AC has no authority to continue permit extensions on these projects contrary to the intent of state law that now requires ADA minimums.

Approving Authority:

Michael J. Mankin, AIA
Manager, Access Compliance Program

Interim Disabled Access Guidelines for Electrical Vehicle Charging Stations

97-03

Effective 4-30-97
Revised 6-5-97

This policy is applicable to projects under DSA jurisdiction only. DSA's Access Compliance jurisdiction encompasses state-funded buildings, facilities and universities, as well as publicly-funded elementary schools, secondary schools, and community colleges. Local jurisdictions may or may not adopt similar methods of administering current code requirements, determining equivalent facilitation, or defining acceptable parameters as necessary in enforcing the existing California Building Standards Code as allowed under Government Code Section 4451(f) of the California Code of Regulations.

Issue: In state funded projects with electrical vehicle, charging stations must be accessible. Electric Vehicles are being slowly introduced to the consumer market over the next three years as a result of an agreement between auto makers and the State of California. The zero emission vehicles as well as the equipment to charge them are continuing to develop and change at a rapid pace. Yet to successfully serve new electric vehicle customers, public charging is essential. Public charging sites that are developed now are likely to see significant technology changes before electric vehicles are fully commercialized. Based on a rule adopted by the California Air Resources Board, beginning in 2003, 10% of vehicles sold in California must be zero emission.

Public charging stations will be installed in public places such as shopping centers, parking lots and garages of companies or municipalities. They are provided as a convenient charging location for Electric Vehicle owners while they work or shop. Full charging of an Electric Vehicle takes between two to three hours.

Resolution: Representatives of the Division of State Architect, California Electric Transportation Coalition, Edison EV, The California Building Officials, Department of Rehabilitation and members of the disabled community have held meetings for the purpose of developing interim guidelines to address the issue of disabled access to these charging stations.
The following guidelines have been developed and agreed upon by the these organizations:

ARE EV CHARGING STATIONS REQUIRED TO BE ACCESSIBLE?

Yes. EV Charging Stations are required to be accessible because they offer a service to the general public. When EV charging is coupled with regular parking, the EV charging is considered the primary service. (See Item V for further discussions.)

WHAT PERCENTAGE OF THE EV CHARGING STATIONS MUST BE MADE ACCESSIBLE?

The following table shall be used in determining the required number of accessible charging stations:

# of charging stations provided at a site	# of accessible charging stations required
1 to 25	1
50	2
51 to 75	3

WHAT PERCENTAGE OF THE EV CHARGING STATIONS MUST BE MADE ACCESSIBLE?
The following table shall be used in determining the required number of accessible charging stations:

# of charging stations provided at a site	# of accessible charging stations required
76 to 100	4

WHAT SPECIFICATIONS MUST THE ACCESSIBLE EV CHARGING STATION COMPLY WITH?

a. A 9 foot wide space by 18 feet deep space is required. An access aisle of 5 feet on the passenger side is required. One in every eight accessible charging stations, but not less than one, shall be van accessible with a 8 foot access aisle.

b. The accessible EV charging station and its access aisle need not be striped or provided with signage as required for an accessible parking space. An information sign must be posted which reads, “Parking for EV Charging Only; This Space Designed for Disabled Access; Use Last.”

MUST ACCESSIBLE EV CHARGING STATIONS BE RESERVED EXCLUSIVELY FOR THE USE OF PERSONS WITH DISABILITIES?

No. The primary function of these stations is the charging of Electric Vehicles. Parking is not intended to be the primary use of the charging station.

ARE THERE ANY RESTRICTIONS RELATIVE TO THE LOCATION OF THE ACCESSIBLE EV CHARGING STATIONS?

For installations associated with new construction, the accessible charging station must be located in close proximity to a major facility, public way or a major path of travel on the site. Note: 200 feet is the maximum distance recommended. However, the charging stations need not be provided immediately adjacent to the major facilities since, again, the primary purpose of the stations is to provide the charging as a service, and parking is not intended to be the primary use of the stations.

For installations at existing sites, the accessible charging station need not be located in close proximity to other services at the site.

IS AN ACCESSIBLE PATH OF TRAVEL REQUIRED FROM THE ACCESSIBLE EV CHARGING STATION TO OTHER SERVICES PROVIDED AT THE SITE?

Yes, for installations associated with new construction. As for other facilities on the site, an accessible path of travel is required between facilities.
For installation at an existing site, an accessible path of travel is required to the extent that the cost

of providing such path does not exceed 20% of the cost of the EV equipment and installation of all EV charging stations at the site, when such valuation does not exceed the threshold amount referenced in Exception 1 of Section 1134 of Title 24. The accessible path of travel shall connect to a major facility, public way or major path of travel on the site.

WHAT SPECIFICATIONS MUST THE CHARGING EQUIPMENT MEET?

The charging equipment must meet all applicable reach range provisions of Section 1118B of Title 24. A clear path of travel measuring 36 inches in clear width to the charging equipment is required.

DOES THE INSTALLATION OF CHARGING STATIONS AT AN EXISTING SITE TRIGGER PATH OF TRAVEL IMPROVEMENTS SUCH AS PRIMARY ENTRANCE TO OTHER FACILITIES, RESTROOMS, TELEPHONES, OR DRINKING FOUNTAINS?

No, unless the above features are located in the parking lot, are accessed directly from the parking lot and designed for use with the parking lot.

HOW DOES THE THREE-YEAR VALUATION ACCUMULATION APPLY TO THESE INSTALLATIONS?
The valuation of other improvements at the site over the last three years need not be added to the cost of the installation to determine application of the exception referenced in item VI above. The cost of installation of other EV charging stations at the site over a three-year period must be used in determining compliance with the exception.

Approving Authority:

Michael J. Mankin, AIA
Manager, Access Compliance Program

Engineered Wood Product at Playground Equipment

97-04

Effective 6-25-97
Revised 4-5-00

This policy is applicable to projects under DSA jurisdiction only. DSA's Access Compliance jurisdiction encompasses state-funded buildings, facilities and universities, as well as publicly-funded elementary schools, secondary schools, and community colleges. Local jurisdictions may or may not adopt similar methods of administering current code requirements, determining equivalent facilitation, or defining acceptable parameters as necessary in enforcing the existing California Building Standards Code as allowed under Government Code Section 4451(f) of the California Code of Regulations.

Issue: Often playground equipment is inaccessible when the surrounding fall area uses sand, sawdust, and loose wood chips. While playgrounds do not have specific requirements in the California State Building Code (CSBC), they are public accommodations required by State law to be accessible. Also the US Access Board has developed draft language regarding accessibility to playground equipment which indicates several issues that need to be addressed in providing access to playground equipment.

Resolution: Until specific regulations are adopted by either the US Access Board or the CSBC, engineered wood products meeting the standard identified as ASTM-PS83 will be allowed as an acceptable destination material around playground equipment. The path-of-travel to such equipment should be no further than twenty (20) feet from transfer areas or entrances to the playground equipment. In other words, while such material as Fibar or other engineered wood products are not appropriate for path-of-travel surfaces, as destination material around play equipment, they are appropriate for the dual use of being an appropriate fall area material and also providing a reasonable surface for access to the equipment. material requires that it not be compromised by the use of sawdust and other poor maintenance techniques, which lessens its value in providing access to the equipment. The use of all rubber surfaces around play equipment is also acceptable. When rubber is used as a path through Fibar to transfer points, engineered wood products have a tendency to drift away from the rubber path providing a dangerous stumbling area for children running around the equipment.

Approving Authority:

Michael J. Mankin, AIA
Manager, Access Compliance Program

Detectable Warning Domes At Curb Cuts Required By Federal Law To Be Flushed At The Lip

97-05

Effective 7-2-97
Revised 4-5-00

This policy is applicable to projects under DSA jurisdiction only. DSA's Access Compliance jurisdiction encompasses state-funded buildings, facilities and universities, as well as publicly-funded elementary schools, secondary schools, and community colleges. Local jurisdictions may or may not adopt similar methods of administering current code requirements, determining equivalent facilitation, or defining acceptable parameters as necessary in enforcing the existing California Building Standards Code as allowed under Government Code Section 4451(f) of the California Code of Regulations.

Issue: The State Building Code calls for a half-inch lip at the bottom of all curb ramps. Federally-funded projects, generally those on the State highway grid system, are required to have flush positions at curb cut lips. This requirement prevents compliance with the present State Building Code specific to this issue. In cooperation with the California Department of Transportation and other interested parties, the Division of the State Architect/Access Compliance Program (DSA/AC) in its jurisdictional role, has approved for Caltrans a standard set of plans which permits flush curb ramps as an equivalent facilitation where the curb ramps are required to be flush because of federal requirements. While DSA/AC continues to endorse the appropriateness of State enhancements to federal minimum requirements, we feel it is important that enhancements for partially-sighted and blind citizens must be maintained.

Resolution: On projects where federal law requires flush transition at the bottom of curb cuts, DSA/AC will accept either a steep curb cut at or exceeding 1:15 slope or a 24-inch band of detectable warning domes, arranged in-line (not the staggered pattern) as an alternative to the half-inch lip. This design allows partially-sighted and blind persons to detect hazardous vehicular areas. Note that the 24-inch in-line domes are only required where curb ramps are less than 1:15 slope. Any project or any jurisdiction which wishes to install curb cuts without the half-inch lip should develop a policy of examining this issue on a case-by-case basis until federal and state codes are realigned. This policy shall remain in effect for projects solely under our jurisdiction and projects in other jurisdictions should be reviewed by the local building official on this issue.

Approving Authority:

Michael J. Mankin, AIA
Manager, Access Compliance Program

Parking Ticket Dispensers

97-06

Effective 12-23-97
Revised 4-5-00

This policy is applicable to projects under DSA jurisdiction only. DSA's Access Compliance jurisdiction encompasses state-funded buildings, facilities and universities, as well as publicly-funded elementary schools, secondary schools, and community colleges. Local jurisdictions may or may not adopt similar methods of administering current code requirements, determining equivalent facilitation, or defining acceptable parameters as necessary in enforcing the existing California Building Standards Code as allowed under Government Code Section 4451(f) of the California Code of Regulations.

Issue: This interim policy requires parking areas controlled by ticket dispensers to include accessible parking spaces for persons with disabilities outside the controlled area so that these inaccessible dispensers do not create an architectural barrier.

The California Vehicle Code Section 22511.5 allows any person with a disability, displaying distinguishing placards or special plates, to park in any zone that is restricted in the length of time parking is permitted, and metered parking, such as those restricted by ticket dispensers to allow such persons to park without paying any fees. While most people with disabilities would rather pay the fee in order to be treated equally, it may be necessary to consider this issue in conjunction with developing a solution for a related issue in providing additional uncontrolled parking. DSA is not intending to prevent parking facilities from charging a fee in spite of metered parking being exempted from the fee in statute. While existing parking facilities are somewhat limited with the situation they have, they must programmatically provide solutions that make it possible for persons with disabilities to park without the need to retrieve a ticket from a ticket dispenser. Intercom systems that could call an attendant to raise the gate, or to remotely raise the gate, would seem to be a reasonable programmatic solution.

Such dispensers are architectural barriers to quadriplegics, some amputees and other persons with reach-range limitations. As a rule, programmatic solutions may not withstand the test of time, and architectural barriers must be solved by architectural solutions. Until regulations are developed, DSA is adopting an interim policy consistent with the vehicle code and the regulations cited below, which provide a solution to these architectural barriers.

Resolution: To be consistent with Vehicle Code Section 22511.5 and Government Code Section 4450, and especially Section 101.2 of Part 2 of the California Building Code, Title 24, it is necessary to plan review and approve parking facilities which provide at least one accessible van stall outside the restricted area in new construction, and in existing facilities, DSA will require adequate signage indicating a programmatic solution if there is not accessible parking equally available within 200 feet in a nearby facility.

Approving Authority:

Michael J. Mankin, AIA
Manager, Access Compliance Program

Top and Bottom Landings at Relocatable Classroom Buildings

97-07

Effective 8-25-97
Revised 3-1-00

This policy is applicable to projects under DSA jurisdiction only. DSA's Access Compliance jurisdiction encompasses state-funded buildings, facilities and universities, as well as publicly-funded elementary schools, secondary schools, and community colleges. Local jurisdictions may or may not adopt similar methods of administering current code requirements, determining equivalent facilitation, or defining acceptable parameters as necessary in enforcing the existing California Building Standards Code as allowed under Government Code Section 4451(f) of the California Code of Regulations.

Issue: For many years, the Division of the State Architect, Access Compliance (DSA/AC) policy has been to accept top landings with only 30 inches clear area at the strike side of doors. This policy is inconsistent with State Regulatory Law where 42 inches is required whenever a door opens out onto a landing. DSA feels that to continue accepting 30 inch strike side clearances is only acceptable under certain conditions which relate to existing conditions.

Resolution: Relocatable classroom buildings submitted for review after January 1, 1998, must provide a top landing as required in the State Building Code which requires 42 inches clear of the door swing, and therefore must be 42 inches away from the leading edge of the door.

Where the relocatable building is being moved to a new location and an existing ramp is being relocated for use with that building, then DSA/AC will accept the situation as adequate at 30 inches on the strike side. Also, existing ramps formally approved by DSA under a PC designation will also be acceptable if relocated if such landing was designed in a way to provide only 30 inches clear on the strike side.

This policy is confirmed after a review of statutory and regulatory law, as well as public testimony or comments from the hearing, portable classrooms will no longer be approved less than 42 inches clear from the leading edge of the door to the centerline of the approaching ramp. Any other drop-off situation, such as stairs or open sides, either must be protected by a guardrail or must provide a level and clear distance 42 inches away from the leading edge of the door to the closest unguarded edge.

Approving Authority:

Michael J. Mankin, AIA
Manager, Access Compliance Program

Over-The-Counter Approvals for Existing Restrooms

97-11

Effective 11-3-97

This policy is applicable to projects under DSA jurisdiction only. DSA's Access Compliance jurisdiction encompasses state-funded buildings, facilities and universities, as well as publicly-funded elementary schools, secondary schools, and community colleges. Local jurisdictions may or may not adopt similar methods of administering current code requirements, determining equivalent facilitation, or defining acceptable parameters as necessary in enforcing the existing California Building Standards Code as allowed under Government Code Section 4451(f) of the California Code of Regulations.

Issue: Many existing school sites have restrooms which have been approved by the Division of the State Architect/Access Compliance (DSA/AC) and have approval numbers greater than 44,000. While these approvals indicate that the requirements at that time were being met, new code changes were adopted in 1994 to require a 60 inch turning circle and an outswinging door in all single occupancy restrooms. At the time of this code change, the application numbers were assigned above 61,000. Although projects approved later than this are clearly fully accessible, other projects approved with numbers above 44,000 are still quite usable. Because it is often technically unfeasible to upgrade prior approvals to current standards, the DSA/AC staff is instructed to generously grant hardship exceptions upon request when all the other issues meet the current code requirements.

Resolution: All projects submitted should have DSA approval numbers greater than 61,000 that indicate path of travel, accessible parking (including van), restrooms, and drinking fountains. Projects with DSA approval numbers between 44,000 and 61,000 may demonstrate a reasonable amount of access. However, these projects may not be meeting the Americans with Disabilities Act (ADA) regulations. A means to identify the non-compliance and have these facilities upgraded to meet current code regulations must be created. The following directive shall be a staff guideline to accepting and approving these projects:

1. Grant a hardship, when requested, to projects where access has been provided with approval numbers of less than 61,000 and above 44,000. Request the name and phone number of the ADA coordinator for the district.

2. Grant a hardship when the architect would have to make an additional trip to the site, for verification of access with approval numbers 44,000 to 61,000 to meet current code compliance regulations for access. Request the name and phone number of the ADA coordinator for the district.

Approving Authority:

Michael J. Mankin, AIA
Manager, Access Compliance Program

Access Code Adoption to the Metric System

97-12

Effective 12-9-97
Revised 4-5-00

This policy is applicable to projects under DSA jurisdiction only. DSA's Access Compliance jurisdiction encompasses state-funded buildings, facilities and universities, as well as publicly-funded elementary schools, secondary schools, and community colleges. Local jurisdictions may or may not adopt similar methods of administering current code requirements, determining equivalent facilitation, or defining acceptable parameters as necessary in enforcing the existing California Building Standards Code as allowed under Government Code Section 4451(f) of the California Code of Regulations.

Issue: The Federal government adopted the metric system as the master measurement system usable in the U.S.A. as of October 1, 1996. The Metric system was originally generated to make measurements easier to calculate, which is why other countries welcomed it. Most people in the U.S.A. are not accepting it and complain that it is more difficult.

The difficulty centers on the use of the millimeter (mm) and the meter (M) as its main units. A millimeter is a little more than 1/32 of an inch, and a meter is a little more than a yard. The imperial measuring system conversion would be as follows: 1 unit = 1/32 inch, and 1 yard = 1152 units.

There are units in between inches and feet and units between millimeters and meters; centimeters (cm) and decimeters (dm). 1 cm = 10 mm (slightly less than one-half inch), and 1 dm = 100 mm (about 4 inches).

The imperial architects chose feet and inches as human scale and 1/8 of an inch or less for shop drawings. The metric architects selected meters and centimeters as human scale and millimeters for shop drawing.

For example the code calls for door size to be 36" x 80". The exact conversion in the code it is 914 mm x 2032 mm. However, rounding out the numbers to centimeters the conversion would be 90 cm x 200 cm.

Resolution: Apply to access related dimensions only:

1. Since the metric system is the future system, it needs to be treated as the master system followed by equivalent imperial system, for example:

   "*Door Size. Every required exit doorway shall be of a size as to permit the installation of a door not less than 90 cm (3 feet) in width and not less than 200 cm (6 feet 8 inches) in height.*"

2. Currently the code allows tolerance for construction error; conversion tolerance will also be permitted.

3. Use nominal conversion for 1" = 2.5 cm and 1' = 30 cm.

4. As 1/8 of an inch and miles were never addressed in the access building code, the same millimeters and kilometers will be left out.

5. This change should be used immediately until it is incorporated in the new code.

Approving Authority:

Michael J. Mankin, AIA
Manager, Access Compliance Program

Special Access (Wheelchair) Lifts

98-01

Effective 2-18-98
Revised 4-5-00

This policy is applicable to projects under DSA jurisdiction only. DSA's Access Compliance jurisdiction encompasses state-funded buildings, facilities and universities, as well as publicly-funded elementary schools, secondary schools, and community colleges. Local jurisdictions may or may not adopt similar methods of administering current code requirements, determining equivalent facilitation, or defining acceptable parameters as necessary in enforcing the existing California Building Standards Code as allowed under Government Code Section 4451(f) of the California Code of Regulations.

ISSUE: In cases of extreme hardship where installation of accessible elevators or wheelchair lifts are technically infeasible, and at other times, to prevent the destruction of a historic buildings, residential elevators are permitted to serve as a part of the accessible route. Generally, residential elevators are too small for a person using a wheelchair to enter and turn around within the elevator cab. Certain enhancements are required in order to provide a safe and useable elevator.

RESOLUTION: In addition to current special lift standards in Article – 15, special access lifts - performance guidelines shall be a part of the DSA/AC plan checking requirements for those projects under state jurisdiction. The following enhancements will also be a part of these performance guidelines:

1. Gates and Doors: Each gate and door serving a special lift shell will be designed to meet the minimum requirements of Doors, Section 1133B.2

2. Folding Transition Lift Ramp: Each folding transition ramp shall be arranged to provide a clear unobstructed 48 inches perpendicular to the low-side edge of the folding transition ramp.

3. Policy 95-05, Residential Elevators in Commercial Buildings: Policy 95-05 shall also be a part of these performance guidelines.

Approving Authority:

Michael J. Mankin, AIA
Manager, Access Compliance Program

Two-Story Relocatable Classrooms Project

98-02

Effective 7-13-98

This policy is applicable to projects under DSA jurisdiction only. DSA's Access Compliance jurisdiction encompasses state-funded buildings, facilities and universities, as well as publicly-funded elementary schools, secondary schools, and community colleges. Local jurisdictions may or may not adopt similar methods of administering current code requirements, determining equivalent facilitation, or defining acceptable parameters as necessary in enforcing the existing California Building Standards Code as allowed under Government Code Section 4451(f) of the California Code of Regulations.

Issue: Two-story relocatable classrooms are considered new construction and require full-size commercial elevators for accessibility.

Resolution: This policy will be enforced on a case by case basis; however, DSA will consider the following as acceptable compliance with the California Building Code regulations.

Each school district utilizing two-story modular, relocatable classrooms must submit in writing to this office, a request for a waiver to use wheelchair lifts in lieu of full commercial elevators on a site by site basis, for review and approval by DSA for the State of California.

1. School district(s) choosing to utilize two-story modular, relocatable classrooms may be allowed to utilize one wheelchair lift only at any one school site as long as there is not more than 3,000 square feet on the upper level two-story classrooms in one single cluster at any one given site. If, after the initial cluster has been erected, the school district(s) place more two-story modular, relocatable classrooms at that given site, the school district(s) agree to utilize full commercial elevators as prescribed by State codes.

2. The school district(s) agree that if they place any more than 3,000 square feet on the upper level two-story modular classroom or any additional cluster, that the school district(s) shall utilize full commercial elevator systems as prescribed by State Codes.

3. Should the school district(s) choose to actually relocate any classrooms to a new site, the school district(s) shall conform to all items above.

4. The superintendent or assistant superintendent of the district(s) shall assert that the school has an ADA transition plan that is being funded and which has been aired through public participation, as required by federal law; and attest that all of the above conditions for granting this one-time exception from installing a full-size commercial elevator have been met.

Approving Authority:

Michael J. Mankin, AIA
Manager, Access Compliance Program

Return to the Policy Index

Modernization Project Scope

98-03.2

Effective 11-15-98

This policy is applicable to projects under DSA jurisdiction only. DSA's Access Compliance jurisdiction encompasses state-funded buildings, facilities and universities, as well as publicly-funded elementary schools, secondary schools, and community colleges. Local jurisdictions may or may not adopt similar methods of administering current code requirements, determining equivalent facilitation, or defining acceptable parameters as necessary in enforcing the existing California Building Standards Code as allowed under Government Code Section 4451(f) of the California Code of Regulations.

Issue: When a modernization project is submitted to DSA the goal of the Access Compliance review is to ensure that the project design addresses the needs of people with disabilities as members of the general public, including the accessibility requirements for family members, teachers and students. To this end the California Building Code (CBC), Section 1134B, requires that all renovations, structural repairs, alterations and additions comply with current regulations. This requires a path-of-travel to all areas of new and altered work and access to toilet rooms and other facilities that serve the area of work.

Underpinning state regulation is the Americans with Disabilities Act, Title II (ADA) requiring school districts to provide access to programs and buildings, new and existing. An important element of ADA compliance under Title II is the completion of a Self-Evaluation and Transition Plan which must outline all work necessary to achieve a barrier free program and facility. It is important that the conclusions and timetable of the Transition Plan, along with the requirements of CBC Section 1134B, play a major role in defining the scope of work of a modernization project in order to make best use of available funds. In order to achieve this goal it is necessary to establish priorities in the expenditures of state funds related to accessibility in modernization projects.

Resolution: EXECUTIVE SUMMARY: THIS POLICY IDENTIFIES AND PRIORITIZES CODE MANDATED AND DISCRETIONARY ACCESSIBILITY REQUIREMENTS FOR SCHOOL MODERNIZATION PROJECTS FUNDED WHOLLY OR IN PART BY THE USE OF STATE FUNDS. ALL NEW CODE MANDATED WORK AND TEN PERCENT (10%) OF THE CONSTRUCTION COST MUST BE ALLOCATED FOR ACCESSIBIILTY WITHIN THE BUILDING ENVELOPE. WORK RELATED TO THE PATH OF TRAVEL TO THE AREA OF REMODEL SHALL BE ACCESSIBLE AND COSTS WILL NOT BE CONSIDERED AS PART OF THE TEN PERCENT (10%) FOR THAT PORTION OF THE ROUTE OUTSIDE THE BUILDING ENVELOPE.

The agreement between related agencies and DSA requires ten-percent (10%) of the modernization funds to be used specifically for accessibility improvements in areas of alteration *within the building envelope*. Equivalent facilitation and other hardship relief will be granted to the extent allowed by federal and state code when the cost of construction associated with providing accessibility exceeds ten percent (10%) for *work within the building envelope*. Since the 1998 passage of Senate Bill 50, additional funding for hardship relief is limited, and for some projects may not be available except for installation of code required elevators. Nonetheless, it is important to note that federal and state accessibility regulations relating to path-of-travel requirements are still mandated for projects costing more than the threshold as defined by CBC Section 1134B.2.1, Exception 1.

The following list identifies those building elements that shall be made accessible when any

state funds are used in a modernization project in order to meet *minimum* requirements of CBC Section 1134B and the ADA Title II. Items in this first list that occur *outside of the building envelope will not* be subject to the limitations of the ten-percent (10%) funding cap. Those items on the first list that do occur *within the building envelope* will count towards the 10% cap but must be addressed whether or not they exceed the cap. Where technical infeasibility exists, relief may be sought using current regulatory exemptions.

The items in the first list are to be a part of the **required scope** and are as follows:

· An accessible path-of-travel from the public right of way through a primary entrance to areas of new or altered work within each building. This may include ramps & elevators (funding for elevators are granted by OPSC in addition to basic funding.)

· At least one set of adult toilet rooms (men's and women's); at least one set of student toilet rooms (boys and girls) and kindergarten toilets if provided. Toilet rooms are to be centrally located on the accessible path-of-travel in order to minimize travel distance. *(This requirement will count towards the ten percent (10%) amount).*

· Required accessible parking counted for each lot or covered garage provided at the site.

· At least one high-low accessible drinking fountain (where provided) per floor. *(This requirment will count towards the ten-percent (10%) if within the building).*

· At least one accessible public phone (where provided).

· Signs for telephones, toilets, parking, stairway identification, exits and direction to restrooms.

Towards the effort to make the facility fully accessible, and in the absence of a completed ADA Self-Evaluation Transition Plan,[1] the following items must be included in the scope of work but *will* be subject to the funding cap of ten-percent (10%) for *work inside the building envelope. (For projects where all accessibility code requirements have been met, either as result of current or previous work, the obligation to spend up to the 10% cap is relieved).*

The accommodations and items subject to the ten percent (10%) cap in the order of priority are considered **expanded scope** and are as follows:

· All classrooms entries shall be made accessible and on the accessible path-of-travel.

· All specialized classroom entries, such as science rooms and home economic rooms shall be made accessible.

· Five-percent (5%) of student workstations shall be made accessible in an integrated

manner. Specialized staff/student work areas and study carrels shall be made acces sible. One of each type of classroom sink, fume hood, eyewash and emergency shower shall be made accessible. Associated prep areas shall be accessible.

- Libraries, aisles, checkout and computer counters, library desks and library bookshelves shall be accessible.

- Cafeterias shall be made accessible. This includes tables without bench seats on one side in more than one location for students using wheelchairs. Pass through serving windows and food-serving aisles shall be accessible.

- Auditoriums shall provide accessible and integrated seating comparable to other seating in terms of location and sight line. Accessible seating shall be dispersed throughout the auditorium and be accompanied by companion seating. Direct access to the stage and other performance areas shall be provided by means of a ramp or wheelchair lift. Assistive listening shall be provided.

- Gymnasium and multi-purpose rooms, along with related bleachers, shower and locker rooms shall be accessible. This includes wheelchair lifts or ramps as required to access any stage or raised platform if part of the area of alteration.

- Teachers' rooms and administrative offices, lunchrooms, etc. shall be accessible.

1. See POLICY #00-01 (ACCESS) Self-Evaluation and Transition Plan

- Intercom/telephone systems shall be accessible. Assistive listening systems are required for the hearing impaired, as well as strobe alarms when existing alarm systems are al tered or new systems added

- Signage for permanent room identification shall be accessible.

- Recreational facilities, (playgrounds), track and field structures shall be accessible.

- Additional adult toilet rooms (women & men) and student toilet rooms (girls & boys) shall be made accessible if needed so as to provide toilets within a reasonable distances of new or altered areas of work.

- One of each type of unique accommodation not mentioned above and available to visi tors, parents, staff and students shall be accessible.

At the time of approval and if the cost of compliance exceeds the ten-percent (10%) cap, include a cost breakdown of accessibility elements being provided in the scope of work of the project.

As a service and if requested, Access Compliance will assist school districts and their architects to establish spending priorities that stay within the parameters of this policy by setting up preliminary meetings or phone calls as time is available. Location of elevators, ramps, and wheelchair lifts should be centrally located to the complex of buildings at the site and may need to be addressed as part of the discussion.

See attached regulations relating to the Leroy F. Greene School Facilities Act of 1998.

Approving Authority:

Michael J. Mankin, AIA
Manager, Access Compliance Program

ATTACHMENT – Relating to the Leroy F. Greene School Facilities Act of 1998

The following is a portion of OPSC Regulations 2000, found in Title 22.

(c) Excessive Cost to Construct a New School Project.
A New Construction Grant for a new elementary, middle or high school on a site with no existing school facilities shall be increased by the difference in the amount provided for the New Construction Grant and the amount shown below, based on the number of classrooms in the project:

Class-Rooms in project	*Elementary School pupils*	*Middle School pupils*	*High School pupils*
1	*$160,000*	*$674,000*	*$1,466,000*
2	*$377,000*	*$756,000*	*$1,525,000*
3	*$566,000*	*$840,000*	*$1,885,000*
4	*$717,000*	*$932,000*	*$2,205,000*
5	*$842,000*	*$1,028,000*	*$2,428,000*
6	*$1,021,000*	*$1,125,000*	*$2,428,000*
7	*$1,202,000*	*$1,222,000*	*$2,874,000*
8	*$1,341,000*	*$1,328,000*	*$3,046,000*
9	*$1,341,000*	*$1,440,000*	*$3,184,000*
10	*$1,577,000*	*$1,553,000*	*$3,321,000*
11	*$1,577,000*	*$1,666,000*	*$3,459,000*
12	*$1,660,000*		*$3,585,000*
13			*$3,709,000*
14			*$3,833,000*

Class-Rooms in project	*Elementary School pupils*	*Middle School pupils*	*High School pupils*
15			*$3,958,000*
16			*$4,082,000*
17			*$4,207,000*
18			*$4,331,000*
19			*$4,455,000*
20			*$4,580,000*
21			*$4,704,000*
22			*$4,828,000*

The amounts shown above will be adjusted annually in the manner prescribe in Section 1859.71.

(d) Excessive Cost Due to Urban Location, Security Requirements and Impacted Site. A New Construction or Modernization Grant will be increased if site acreage for the project is:

(1) At least 50 percent but less than 75 percent of the site size recommended by the CDE for the master planned project capacity. The New Construction or Modernizat tion Grant will be increased by eight percent.
(2) At least 30 percent but less than 50 percent of the site size recommended by the CDE for the master planned project capacity. The New Construction or Modernization Grant will be increased by 15 percent.
(3) Less than 30 percent of the site size recommend by the CDE for the master planned project capacity. The modernization Grant will be increased by 50 percent.
(4) Less than 30 percent of the site size recommended by the CDE for the master planned project capacity. The modernization Grant will be increased by 25 per cent.

(e) Excessive Cost for rehabilitation of facilities the Board has determined are a health and safety risk to the pupils pursuant to Section 1859.82 (a) (1) and the cost/benefit analysis to mitigate the problem and remain in the facility is less than 50 percent of the Current Replacement Cost of the facility. If the district qualifies, the district is eligible for funding of rehabilitation costs as a modernization project. The grant amount provided is 80 percent of the amount of the cost esti mate required in Section 1859.82 (a) (1) that has been reviewed by the OPSC and approved by the Board.

(f) Excessive cost due to handicapped access and fire code requirements:

POLICY #98-03.2 (ACCESS)

ATTACHMENT – Relating to the Leroy F. Greene School Facilities Act of 1998
The following is a portion of OPSC Regulations 2000, found in Title 22.

(1) A modernization grant will be increased by three percent for handicapped access and fire code requirements.
(2) A modernization grant will be increased by $80,000 for each new two-stop elevator required to be included in the project by the Division of the State Architect (DSA). The amount shown shall be adjusted annually in the manner prescribed in Section 1859.71.
(3) A modernization grant will be increased by $14,000 for each additional stop of the new elevator required in (2) above. The amount shown shall be adjusted annually in the manner prescribed in Section 1859.71.

Note: Authority cited: Sections 17075.15, Education Code.
Reference: Sections 17075.10 and 17075.15, Education Code.

Section 1859.79. Modernization Matching Share Requirement.

Except in the case of financial hardship as provided in Section 1859.81, any increase to the Modernization Grant for additional grants for facility hardships as provided in Section 1859.82 or Excessive Cost Hardship Grants as provided in Section 1859.83 shall require a district matching share equal to at least 20 percent of the total project cost which, combined with the State's adjusted grant shall represent 100 percent of the total project cost.

Note: Authority cited: Section 17070.35, Education Code
Reference: Section 17074.15, Education Code.
Section 1859.79.1. Modernization Reimbursement.

The Board will not provide Modernization Grants for a project if the district entered into a construction contract for that project before August 27, 1998 unless:
(a) The project met the provisions for funding under the LPP pursuant to Sections 1859.14 or 1859.15; or
(b) The project was approved on the Year-Round Schools Air Conditioning/Insulation Program unfunded approval list pursuant to Education Code Section 42250.1.

Note: Authority cited: Section 17070.35, Education Code
Reference: Section 17070.35, 17074.10 and 42250.1, Education Code.
Section 1859.79.2. Use of Modernization Grant Funds.

Modernization grant funds shall be expended as set forth in Education Code Sections 17074.25 and 17070.15(f) and may also be utilized for other purposes as set forth in Education Code Section 100420(c). Modernization funding, with the exception of savings, is limited to expenditure on the specific site where the modernization grant eligibility was generated. The grant may not be used for the following:

(a) New building area with the exception of the following:

(1)Replacement building area of like kind. Additional classrooms constructed within the replacement area will reduce the new construction baseline eligibility for the district.
(2)Building area required by the federal American with Disabilities Act (ADA or by the Division of the State Architect's (DSA) handicapped access requirements.

(b) New site development items with the exception of:

(1)Replacement, repair or additions to existing site development.
(2)Site development items required by the federal ADA Act or by the DSA's handicapped access requirements.

(c) The evaluation and removal of hazardous or solid waste and/or hazardous substances when the Department of Toxic Substance Control has determined that the site contains dangerous levels of a hazardous substance, hazardous waste, or both that exceed ten percent of the combined adjusted grant and the district matching share for the project.

(d) Lease facilities not owned by another district or a county superintendent.

ATTACHMENT – Relating to the Leroy F. Greene School Facilities Act of 1998

The following is a portion of OPSC Regulations 2000, found in Title 22.

Modernization Grant funds shall be expended as set forth in Education Code Section 17074.25 and may also be utilized for other purposes as set forth in Education Code Section 100420(c).

Modernization Grant funds may be used on any school facilities on the site. If the classroom facilities on the site include areas that are currently ineligible for modernization, it will not disqualify those facilities from future modernization funding.

Note: Authority cited: Section 17070.35, Education Code
Reference: Section 17070.15, 17074.25 and 100420(c), Education Code.

Accessibility Requirements In Group I Occupancies

98-04

Effective 10-15-98
Revised 4-5-00

This policy is applicable to projects under DSA jurisdiction only. DSA's Access Compliance jurisdiction encompasses state-funded buildings, facilities and universities, as well as publicly-funded elementary schools, secondary schools, and community colleges. Local jurisdictions may or may not adopt similar methods of administering current code requirements, determining equivalent facilitation, or defining acceptable parameters as necessary in enforcing the existing California Building Standards Code as allowed under Government Code Section 4451(f) of the California Code of Regulations.

Issue: The general accessibility requirements usually apply throughout a facility, and occupancy enhancements often add specificity. However, for Group I Occupancies, scoping reductions reduce the total number of required accessible patient bedrooms and related toilets.

Resolution: The general application of accessibility requirements for new buildings or for renovations, structural repairs, alterations and additions to existing buildings are found in CCR title 24, Part 2, Chapter 11B (California Building Code), Section 1103B.1. Occupancy modifications and/or enhancements, found in subsequent sections, prescribe more detailed requirements for specific applications.

The specific applications for accessibility for Group I Occupancies (Hospitals, Skilled Nursing and Intermediate-Care Facilities) are found in Sections 1109B.1 through 1109B.8., Section 1109B.3, subsections 1 through 3, state that the total number of patient bedrooms and associated toilet rooms that must be accessible for Long-term-care (Skilled Nursing and Intermediate Care) facilities are 50 percent, 10 percent for General-purpose hospital (Acute Care) facilities, and Rehabilitation facilities must have 100 percent accessible patient bedrooms. Specificity is also given in the various sections of 1109B pertaining to requirements for the facility entrance, diagnostic and treatment areas, waiting areas, offices and sanitary facilities, offices and suites, and all public-use and common-use areas. The requirements found in Section 1114B.1 are to be applied to all of these areas.

The special requirements of Section 1114B.1 need not be applied to those patient bedrooms and associated toilet rooms beyond the percentage of rooms required in Section 1109B.3. To place these requirements on **all** patient rooms and/or associated toilet rooms would in essence be requiring 100 percent patient bedroom accessibility. This is clearly not the intent or specific percentages, as a modification or enhancement to patient bedroom accessibility requirements would not have been given.

The total number of accessible patient bedrooms is to be applied facility-wide, not necessarily by unit or by floor. However, care must be exercised to have a reasonable disbursement of accessible patient bedrooms throughout the facility.

Because of other code provisions, it appears that reasonable access or accommodation is generally provided to all patient bedrooms. The doors are 3'-1-" or 4'-0" wide to provide the minimum 44" clear exit width required by Section 1019.2. This width is greater than the 32" mini-

mum required for accessibility. Doors are usually easy to open because closures are not required for patient bedrooms, even when located off a rated exit corridor, per Section 1019.3. The doors are usually left in an open position when occupied to allow better supervision by nursing staff and cubicle curtains surrounding the bed(s) usually provide privacy.

Approving Authority:

Michael J. Mankin, AIA
Manager, Access Compliance Program

Folding Bleachers Accessible Seats

98-05

Effective 12-1-98
Revised 3-16-00

This policy is applicable to projects under DSA jurisdiction only. DSA's Access Compliance jurisdiction encompasses state-funded buildings, facilities and universities, as well as publicly-funded elementary schools, secondary schools, and community colleges. Local jurisdictions may or may not adopt similar methods of administering current code requirements, determining equivalent facilitation, or defining acceptable parameters as necessary in enforcing the existing California Building Standards Code as allowed under Government Code Section 4451(f) of the California Code of Regulations.

Issue: The California Building Code (CBC) calls for providing accessible seating areas for persons with disabilities in stadiums, multi-purpose rooms, and gymnasiums.

> ***Section: 1104B.3.5 / 3103A (b) 2.A (iii)d. Placement of wheelchair locations****. Wheelchair areas shall be an integral part of any fixed seating plan, and shall be arranged so as to provide persons with disabilities a choice of admission prices and lines of sight comparable to those for members of the general public. Each wheelchair area shall adjoin an accessible route, which shall also serve as a means of egress in case of emergency. At least one companion fixed seat shall be provided next to each wheelchair seat locations. When the seating capacity exceeds 300, wheelchair spaces shall be provided in more than one location in addition to complying with Section 1104B.3.3/3103A (b) 2.A (iii).*

Folding bleachers are a fixed foldable seating system and the wheelchair spaces are usually provided by a cut back in the first rows. Integrated companion fixed seats cannot be obtained in most designs.

Resolution: Until more specific regulations are adopted for foldable bleachers, projects will be accepted which have the following features:

1. Next to each wheelchair space a 60-centimeters (24-inches) by 120 centimeters (48 inches) clear space will be provided for each companion seating area, with signage identifying it on the companion seat.
2. Wheelchair spaces will be identified by the International Symbol of Accessibility on the floor or on the front of the lowest bleacher row in front of space.
3. The number of wheelchair accessible seats shall be dispersed equally for each side (home and visitors) and shall not be clustered into one location for each side.

Approving Authority:

Michael J. Mankin, AIA
Manager, Access Compliance Program

Signs

98-06

Effective 10-15-98
Revised 4-5-00

This policy is applicable to projects under DSA jurisdiction only. DSA's Access Compliance jurisdiction encompasses state-funded buildings, facilities and universities, as well as publicly-funded elementary schools, secondary schools, and community colleges. Local jurisdictions may or may not adopt similar methods of administering current code requirements, determining equivalent facilitation, or defining acceptable parameters as necessary in enforcing the existing California Building Standards Code as allowed under Government Code Section 4451(f) of the California Code of Regulations.

Issue: The intent of DSA, Access Compliance, (DSA/AC), is to provide tactile and visual information for persons with visual and mobility impairment necessary for full use of the building or members of the general public, employees and guests.

Resolution: Until more specific regulations are adopted for signs, projects will be accepted which have the following features:

1. There shall be high dark/light contrast between the sign background and the tactile characters.

2. The surface of the sign background and of the tactile characters shall be non-glare.

3. Tactile characters:

    a. The characters shall be raised from the background 1/32 inch minimum.

    b. Characters will be between 5/8 inch minimum and 2 inches maximum in height.

    c. Character width shall be between 60 and 100 percent of the height of the character. (Ration of 3:5 to 1:1)

    d. Stroke width shall be between 10 and 20 percent of the height of the character. (Ratio of 1:10 to 2:10)

4. Tactile characters shall be accompanied by Grade 2 Braille with the following specifications:

    a. Braille shall be located a minimum of ½ inch from tactile characters.

    b. Interdot distance shall be 1/10 inch from center to center.

    c. Intercell distance shall be 3/10 inch from center of a dot in one cell to the center if the corresponding dot in the adjacent cell. (Example: from dot 1 in first cell to dot 1 in adjacent cell.)

    d. Dot height shall be 1/40 inch (.025 inch).

Whereas, Title 19 requires that each stairwell in a high-rise building have a 12 inches square sign which informs emergency personnel of the stairwell number, the level, which levels can be accessed by that stairwell, and if there is roof access from that stairwell. Title 19 requires certain type sizes and stroke widths. It also requires that the signs be installed in locations where emergency personnel going up and down stairs can see them, and where an open door will not obscure the sign, and

Whereas, Title 24 requires that permanent rooms and spaces which are identified by a number to be identified by a Braille and raised character sign. Further, Title 24 has certain different requirements concerning type sizes and stroke widths. It also requires that the signs be installed in a specific location adjacent to the door on the inside of the stairwell.

These two sets of regulations are not compatible. Therefore, the two sets of regulations can not and should not be satisfied with one sign. Since the floor level is identified by a number, letter, or combination, a separate Braille and raised character sign must be installed adjacent to the door on the inside of the stairwell with this identification. This identification sign must follow all rules of Title 24 dealing with contrast, lack of glare, character size, thickness of raised character, space between raised character and Braille, and Braille specifications.

Every enclosed stairwell shall be identified with a tactile sign with the letter, number or combination assigned to that particular level. This sign shall follow all standards for identification signs contained in Title 24 and ADAAG:

The sign shall be installed adjacent to the door leading into the corridor from the stairwell. The centerline shall be 60 inches above the finish floor, preferably on the latch side. The sign shall be placed so that an individual facing the sign can approach within 3 inches without being hit by the swing of an opening door or encountering an obstacle. If there is not sufficient room immediately adjacent to the door, or not on the latch side, the sign shall be installed as close as possible to the door it identifies.

Approving Authority:

Michael J. Mankin, AIA
Manager, Access Compliance Program

Assembly Seating

98-07

Effective 12-31-98
Rev 12-19-01

This policy is applicable to projects under DSA jurisdiction only. DSA's Access Compliance jurisdiction encompasses state-funded buildings, facilities and universities, as well as publicly-funded elementary schools, secondary schools, and community colleges. Local jurisdictions may or may not adopt similar methods of administering current code requirements, determining equivalent facilitation, or defining acceptable parameters as necessary in enforcing the existing California Building Standards Code as allowed under Government Code Section 4451(f) of the California Code of Regulations.

Issue: There is some confusion related to accessible seating in auditorium, assembly halls, theatres and related facilities. This makes it difficult to establish exactly what types of seats are required. The problem comes about largely because California regulations requiring accessible wheelchair seating existed prior to the 1994 adoption adding language for Americans With Disabilities Act (ADA).

It was the intent of DSA/Access Compliance to adopt only the necessary enhancements required by the ADA which were above and beyond the then existing state requirements. Therefore, it is important to know that the text of the regulations were written for no other purpose than to include what was minimally required by the ADA. In adding companion seating requirements and folding arm rests requirements, it is unclear whether these features are combined with, or mutually exclusive of each other.

Resolution: The number of wheelchair seating spaces are clearly identified in Table 11B-1 which identifies the number of wheelchair seating spaces for each individual person. A companion seat is required to be adjacent to each individual person seat. Folding armrests are required by the ADA and are not required by the ADA to be on an accessible route. One percent beyond the number of required wheelchair seating spaces are required to have folding armrests, however, they may be included in the number of semi-ambulance seating spaces being provided.

One percent of the seats, in addition to the number of required wheelchair spaces, must be required to have at least 24 inches clear leg space in front of the seat to the nearest obstruction. These seats were intended to be provided as a type of seat mutually exclusive of the type of seats with removable armrest. Furthermore, some of the semi-ambulatory seats may be provided with removable armrest to accommodate persons using crutches and walkers. Clustering seats when siteline slopes are greater than 5% is only allowed to be within a given story or mezzanine and does not relieve the project from a need to provide seating in each balcony, mezzanine or floor. In other words, you cannot consolidate seats on one level because this would indicate a highlighted area for persons with disabilities in a discriminatory manner and will not be permitted on projects under DSA/AC jurisdiction.

Approving Authority:

Michael J. Mankin, AIA
Manager, Access Compliance Program

Special Education Relocatable Classrooms

99-01

Effective 1-31-99
Revised 3-10-00

This policy is applicable to projects under DSA jurisdiction only. DSA's Access Compliance jurisdiction encompasses state-funded buildings, facilities and universities, as well as publicly-funded elementary schools, secondary schools, and community colleges. Local jurisdictions may or may not adopt similar methods of administering current code requirements, determining equivalent facilitation, or defining acceptable parameters as necessary in enforcing the existing California Building Standards Code as allowed under Government Code Section 4451(f) of the California Code of Regulations.

Issue: Title 24, Part 2, the California Building Code (CBC) requires public accommodations to be accessible and available on an accessible route with equal facility. Special education trailers for persons with disabilities are at times placed inappropriately in remote corners of the site, somewhat distant from the main buildings of the school facility. Often these sites are placed in a fenced-off area separate from the main playground areas of the school. Recently, case law has indicated that separate, highlighted, accessible features are discriminatory, and that the intent of statutes is to provide integration and dispersal of accessible features. Special education reloctable buildings must be provided as an integrated part of the school facility according to the U.S. Department of Education, Office of Civil Rights, and may not be fenced-off as a separate facility. If these buildings are being fenced-off in order to avoid application of the Field Act, the effect is discriminatory and is unacceptable.

Resolution: Special education relocatable classrooms shall be placed within 200 feet of the main building(s) and may not be fenced-off from the rest of the school site.

Approving Authority:

Michael J. Mankin, AIA
Manager, Access Compliance Program

Playgrounds

99-02

Effective 7-1-99

This policy is applicable to projects under DSA jurisdiction only. DSA's Access Compliance jurisdiction encompasses state-funded buildings, facilities and universities, as well as publicly-funded elementary schools, secondary schools, and community colleges. Local jurisdictions may or may not adopt similar methods of administering current code requirements, determining equivalent facilitation, or defining acceptable parameters as necessary in enforcing the existing California Building Standards Code as allowed under Government Code Section 4451(f) of the California Code of Regulations.

Issue: Participation areas are required to be accessible by Section 1104B.4.3 of Part 2, Title 24, California Code of Regulations. Playgrounds are required to be accessible by this section and by the Americans with Disabilities Act. However, the California Building Standards Code does not provide specificity by indicating on an item by item basis which particular features are required. Additionally, federal agencies are concerned that California playgrounds are often not in strict compliance with Section 504 of the Rehabilitation Act of 1973, which requires play areas, which when viewed in their entirety, to be accessible by teachers, parents and children with disabilities in the most integrated setting.

The Federal Access Board has developed play setting recommendations for new construction, but these well developed accessibility guidelines are not yet adopted by the US Department of Justice for incorporation into the ADA accessibility guidelines. Playgounds are required to be accessible to persons with disabilities as part of an ongoing obligation under Title II of the Americans with Disability Act. As a separate issue, the California Building standards Code "triggers" the requirements for accessibility in alterations, additions or in new construction when it occurs.

Resolution: Until specific requirements are adopted by the US Department of Justice and incorporated into the State Building Standards Code, DSA/AC will not take issue with playground plans which have been developed consistent with the accessibly guidelines for the Play Setting Subcommittee issued by the Access Board. Generally, playground equipment shall be reviewed during the plan check as part of the review process, and in some cases where the design and type of equipment has not been determined, deferred approvals shall be accepted prior to close out of the project. An accessible route will be required to one of each type of feature available in playground equipment, with engineered wood, properly installed and maintained, roll-out mats, or rubber surfaces deemed to be accessible surfaces. Raised features must be available at grade or by transfer points which lead to elevated areas by way of stepped platforms. All features at grade level must also be accessible, and arrange of play features must be provided (at least one of each type). Related to this policy see the Play Setting Subcommittee Guidelines used as a current standard for this environment**.**

Approving Authority:

Michael J. Mankin, AIA
Manager, Access Compliance Program

Application for Unreasonable Hardship Exception

99-05

Effective 9-17-99

This policy is applicable to projects under DSA jurisdiction only. DSA's Access Compliance jurisdiction encompasses state-funded buildings, facilities and universities, as well as publicly-funded elementary schools, secondary schools, and community colleges. Local jurisdictions may or may not adopt similar methods of administering current code requirements, determining equivalent facilitation, or defining acceptable parameters as necessary in enforcing the existing California Building Standards Code as allowed under Government Code Section 4451(f) of the California Code of Regulations.

Issue: See Attached Form.

Resolution: See Attached Form.

Approving Authority:

Michael J. Mankin, AIA
Manager, Access Compliance Program

Attachments

APPLICATION FOR UNREASONABLE HARDSHIP EXCEPTION

Date Received:_____ Accepted by:_____

DOCUMENTATION OF UNREASONABLE HARDSHIP

Project
Address:_____

_____

Plan Review #:_____

Owner:_____Telephone:_____

Applicant:_____Telephone:_____

****

I HEREBY REQUEST AN UNREASONABLE HARDSHIP EXCEPTION for the public accommodation identified as follows:

I DECLARE that an unreasonable hardship exists and that compliance with the building standard would make the specific work of the project affected by the building standard unfeasible. In support of the application, the following information establishes the grounds for a hardship exception under 24 CCR § 222.4

1. State the cost of providing access. $_____

2. State the cost of all construction contemplated. $_____

3. The access feature increases the cost of construction by: %_____

4. State the impact of proposed improvements on financial feasibility of the projects.

5. State the nature of the accessibility which would be gained or lost.
_____

_____

6. State the nature of the use of the facility under construction and its availability to handicapped persons.

_____

_____

7. State the facilities to be provided that are equivalent to the access feature requested to be waived.

_____

_____

I further acknowledge that if the exception being requested is for improvements along the route of travel for an alteration project of minor valuation (<$89,000) or to alter an area previously exempt from accessibility requirements under California law, that I will expend no less than 20% of the valuation of the project (not including costs for requirements along access route) to improve access along the route of travel as required by 24 CCR § 1134B, Exceptions 1 and 2.
The following individuals provided information listed in the above section:

Architect	Owner(s)
Address	Address
Signature	Date

Residential Care Facilities

99-06

Effective 9-1-99

This policy is applicable to projects under DSA jurisdiction only. DSA's Access Compliance jurisdiction encompasses state-funded buildings, facilities and universities, as well as publicly-funded elementary schools, secondary schools, and community colleges. Local jurisdictions may or may not adopt similar methods of administering current code requirements, determining equivalent facilitation, or defining acceptable parameters as necessary in enforcing the existing California Building Standards Code as allowed under Government Code Section 4451(f) of the California Code of Regulations.

Issue: Privately-funded residential accommodations are generally separated into two categories:

1. Short-term living accommodations or transient lodging facilities are for stays less than 30 days and are regulated by the California Building Standard Code (CBSC) for hotels, motels and dormitories as specified in CBSC, Title 24, Chapter 11B.

2. Long-term living accommodations are regulated by the Department of Housing and Community Development (HCD), for privately-funded projects as specified in CBSC, Title 24, Chapter 11A.

Resolution: Privately-funded Residential Care Facilities (RCF) are considered long-term in their nature and generally have common dining and kitchen facilities. Currently, DSA/AC interprets that RCF's shall comply as follows:

1. Six or less guestrooms are not regulated for access by the CBSC, and are exempt by statute.

2. Over six guestrooms, the guestrooms should comply with CBSC, Title 24, Chapter 11A, as required by the HCD; and the common or public areas that are not considered guestrooms should comply with CBSC, Title 24, Chapter 11B, including site access.

Approving Authority:

Michael J. Mankin, AIA
Manager, Access Compliance Program

Toilet Paper Dispensers at Accessible Stalls

99-07

Effective 9-17-99

This policy is applicable to projects under DSA jurisdiction only. DSA's Access Compliance jurisdiction encompasses state-funded buildings, facilities and universities, as well as publicly-funded elementary schools, secondary schools, and community colleges. Local jurisdictions may or may not adopt similar methods of administering current code requirements, determining equivalent facilitation, or defining acceptable parameters as necessary in enforcing the existing California Building Standards Code as allowed under Government Code Section 4451(f) of the California Code of Regulations.

Issue: California Government Code requires public accommodations to be accessible and available on an accessible route with equal facility. When other than flushed toilet paper dispensers are used in an accessible toilet stall or room, the required clearance width of access to the side of the toilet may be reduced, thus limiting accessibility.

Resolution: Limit the projection of a surface or semi-surface mounted accessory from encroaching more than three inches from the face of the wall or partition, and no closer than one and one-half inches to the tangent point of the grab bar.

Approving Authority:

Michael J. Mankin, AIA
Manager, Access Compliance Program

Door Stops and other Floor-Mounted Obstructions

99-08

Effective 12-1-99
Revised 1-1-00

This policy is applicable to projects under DSA jurisdiction only. DSA's Access Compliance jurisdiction encompasses state-funded buildings, facilities and universities, as well as publicly-funded elementary schools, secondary schools, and community colleges. Local jurisdictions may or may not adopt similar methods of administering current code requirements, determining equivalent facilitation, or defining acceptable parameters as necessary in enforcing the existing California Building Standards Code as allowed under Government Code Section 4451(f) of the California Code of Regulations.

Issue: California Government Code 4452 and Title 24, Part 2 require public accommodations to be accessible and available on an accessible route with equal facility. To assure that the path of travel is free of hazards, care must be taken in the design and placement of walking-surface or wall-mounted components.

Resolution: Floor-mounted door stops and similar obstructions are allowed to be installed at a maximum of four inches from the face of the wall or partition. Refer to Title 24, Section 1133B.8.6, for protruding objects.

Approving Authority:

Michael J. Mankin, AIA
Manager, Access Compliance Program

Waivers

99-09.1

Effective 9-1-99

This policy is applicable to projects under DSA jurisdiction only. DSA's Access Compliance jurisdiction encompasses state-funded buildings, facilities and universities, as well as publicly-funded elementary schools, secondary schools, and community colleges. Local jurisdictions may or may not adopt similar methods of administering current code requirements, determining equivalent facilitation, or defining acceptable parameters as necessary in enforcing the existing California Building Standards Code as allowed under Government Code Section 4451(f) of the California Code of Regulations.

THIS POLICY SUPERSEDES POLICY #99-09

Issue: DSA/AC has been granting waivers on California Building Code accessibility requirements on class size reduction projects and other relocatable projects by accepting approved modernizations, one-time waivers and Americans with Disabilities Act (ADA) transition plans. Due to continuous conflict with federal requirements of the ADA and to address concerns raised by US Department of Education, a change in our longstanding policy is necessary.

Resolution: Except for modernization and other large projects, all construction, including relocatable buildings submitted as class size reduction and over the counter projects, shall include as a minimum the following elements:

1. At least one set of accessible separate sex toilet facilities centrally located.
2. At least one hi-lo drinking fountain centrally located.
3. Van-accessible parking.
4. An accessible pedestrian route from the main entrance of the site to the new, or altered area linking accessibility elements 1 through 3.

One-time waivers, or any kind of deferral shall not be accepted in lieu of these required accessibility features.

Approving Authority:

Michael J. Mankin, AIA
Manager, Access Compliance Program

Self-Evaluation and Transition Plan

00-01

Effective 4-1-00

This policy is applicable to projects under DSA jurisdiction only. DSA's Access Compliance jurisdiction encompasses state-funded buildings, facilities and universities, as well as publicly-funded elementary schools, secondary schools, and community colleges. Local jurisdictions may or may not adopt similar methods of administering current code requirements, determining equivalent facilitation, or defining acceptable parameters as necessary in enforcing the existing California Building Standards Code as allowed under Government Code Section 4451(f) of the California Code of Regulations.

Issue: State-funded facilities have to comply with both state and federal accessibility requirements. They must meet the provisions of the California Government Code 4450 and the Americans with Disabilities Act (ADA), whether new or existing. As one of several steps in achieving this goal, ADA Title II requires that all public entities complete a Self-Evaluation and Transition Plan[1] which must outline all work necessary to attain a barrier-free program and facility. The Transition Plan is an important element of ADA compliance and represents the best tool available to evaluate a public entity's compliance status. By completing this plan, a public entity will have demonstrated a good-faith effort towards federal and state accessibility code compliance.

California Government Code 4450(b) requires DSA/AC to ensure that projects submitted for review meet minimum requirements of the ADA. Since the majority of public entities under DSA/AC jurisdiction have failed to *correctly* complete a Self-Evaluation and Transition Plan, it is necessary to provide a policy to assist them towards a **meaningful** conclusion.

Resolution: All public entities with ADA Title II responsibilities and under the jurisdiction of DSA/AC are required by federal mandate to complete a Self-Evaluation Transition Plan. DSA/AC is not the agency responsible for approving such a plan, however, in order to ensure the most cost/effective allocation of funds to meet federal and state accessibility requirements and to ensure full participation by people with disabilities in public life, it is our belief that the followings steps need to be taken:

1. Appoint a knowledgeable ADA/504 compliance officer responsible for ongoing Title II program compliance and development/implementation of the self-evaluation plan for existing programs and services. Be responsible for maintaining and monitoring the transition plan objectives and timetable. Encourage and maintain public participation and awareness. Respond to enquiries from the public, employees and clients.
2. Create a Disability Advisory Committee (DAC) whose membership will include employees, clients and community participants. The committee should include a broad representation of persons with disabilities.
3. Complete the self-evaluation plan[2] with the DAC. Hold public hearings on the Self-Evaluation Plan, including comment periods as required for adequate public input. Implement all corrective

[1] Federal Code of Regulations reference: 28 CFR 35.105-35.107, 35.150(c) and (d)

[2] U.S. Department of Justice, The Americans with Disabilites Act, Title II Technical Assistance Manual, November 1993, pages 43-47. Available from the Pacific Disability & Business Technical Assistance Center, 800/949-4232, or on-line at www.usdoj.gov.

measures related to policies, programs and activities identified by the Self-Evaluation Plan.

4. As part of the development of the transition plan,[2] survey all facilities, identify architectural barriers, and establish a specific timetable for corrective action with DAC and public participation. Develop a program evaluation plan to ensure program focus and on-time outcomes. *Any departure from the requirements of the California Building Standards Code (CBSC) identified in the transition plan should be reviewed and approved in writing by DSA/AC after acceptable equivalent facilitation has been provided, per Government Code 4451 (f).*

5. Continue to maintain accessibility to all programs, services and facilities, as required by ADA Title II and CBSC.

Approving Authority:

Michael J. Mankin, AIA
Manager, Access Compliance Program

[2] U.S. Department of Justice. The Americans with Disabilites Act, Title II Technical Assistance Manual, November 1993, pages 43-47. Available from the Pacific Disability & Business Technical Assistance Center, 800/949-4232 or on-line at www.usdoj.gov.

STATE OF CALIFORNIA
FIVE PHASES OF
ACCESS COMPLIANCE

DOC DATE
AUG 2001

GOVERNMENT CODE
4455

(DISABILITY TRAINING AUTHORITY)

DOR
DEPARTMENT OF REHABILITATION

ADA
IMPLEMENTATION UNIT

ADA
ANALYST

EEO
OFFICE

STATE DEPARTMENT DIRECTOR

- Letter of intent
- Contract with DSA and DOR
- Organize DAC
- Establish ADA analyst and AC architect

ACCESS COMPLIANCE REQUIREMENTS:
SELF EVALUATION
TO BE COMPLETED BY JAN 93
TRANSITION PLAN

1. Identify deficiencies
2. Develop design solution
3. Validate architecture and funding corrections
4. Implement work

(Public/employees participation and DS approval of alternative solutions per FC 4451(f) required)

Structural modifications
to be completed by Jan 1995

DAC
DISABILITY ADVISORY COMMITTEE

This DAC will:
- Advise the Department Director on employment of people with disabilities and disability issues.
- Participate, review and provide input to the Self Evaluation & Transition Plan.

GOVERNMENT CODE
19795 (b)

AC
ARCHITECT
FACILITY PLANNING
OFFICE

GOVERNMENT CODES
4455-4455 (f)
4453-4453 (b)
(ARCHITECTURAL ENFORCEMENT & TRAINING AUTHORITY)

DSA
DIVISION OF STATE ARCHITECT

AC
PROGRAM

PHASE I: COMMITMENT
State Department Director or Agency Head should express his or her commitment to Access Compliance by providing:

PROGRAMS AND SERVICES (ADA 35.105 [a])

- Each state entity must establish an ADA Analyst within its EEO office. Once established, this position will coordinate with Department of Rehabilitation and contract to complete the Self Evaluation.
- This position should be permanent and be in charge of:
  (1) Resolving all problems and issues related to the programs and services and reasonable job accommodation issues
  (2) Revising forms and documents, identifying exiting plans, establish ing a complaint process, identifying training needs for staff to prevent discrimination
  (3) Making necessary chances to policies which impact people with disabilities
  (4) Providing periodic assessment of ADA compliance status, continually upgrading and maintaining all accessible programs and services
  (5) Contracting with DOR to complete proper Self Evaluation and monitoring the five phases of the Access Compliance process

BUILDING OR FACILITY (ADA 35.105[d])

- Designate a limited term or permanent position within the Facility Planning office. Once established, this position must be assigned to work with DSA to:
  (1) Complete the Transition Plan
  (2) Review access compliance of all leased buildings and minor / capital projects
- Contract with DSA to complete proper Transition Plan and to support through 5 phases of the Access Compliance process
- After completion of the Transition Plan, this position can be eliminated or returned to the Facility Planning office

PHASE II: SELF EVALUATION
With assistance from DOR and DSA, complete Self Evaluation and Transition Plan

PROGRAMS AND SERVICES (ADA 35.105 [a])

- Establish grievance procedure
- Identify and revise all policies, programs, services, activities, practices and privileges to prevent discrimination as necessary
- Establish timelines for revisions and implementation of modifications
- Establish system of evaluation and follow up
- Adopt an evaluation plan for persons with disabilities for emergencies
- Maintain access features in working conditions continually
- Organize training for supervisors
- Justify any policies or practices that will not be modified
- Consult with ADA Advisory Committee and the disability community
- Evaluate all devices and equipment
- Maintain the completed Self Evaluation on file for public inspection and comment for 3 years
- Provide design guidance for architect's design program
- Evaluate input from employees prior to office move

BUILDING OR FACILITY (ADA 35.105[d])

- Identify the physical obtacle in public entity facilities that limit the accessibility of its programs or activities to individuals with disabilities
- Describe in detail the methods that will be used to make these facilities accessible, including the redesign ` of the facilities, program modifica tions and reassignment of duties
- Specify the schedule for taking the steps necessary to achieve compliance
- Invite interested parties, including the DAC and the disability community and offer an opportunity to participate in the formation of the transition plan by offering the chance to comment
- Maintain the completed transition plan on file for public inspection
- Summit Transition Plans to be approved by DSA-AC

PHASE III: TRANSITION
Prepare budget and five - year - correction plan to be submitted to Department of Finance for approval

PROGRAMS AND SERVICES

After all elements of the self evaluation are completed, the ADA Analyst must:

- Send the package to the DOR for review and approval
- Publish and incorporate all items into agency policy and make it effective immediately
- Prepare a budget proposal to accomplish the task
- Identify architectural needs and transmit to AC Architect for inclusion

BUILDING OR FACILITY

After all elements of the transition plan are completed, the AC Architect must:

- Work with DSA-AC to formulate a five - year - correction plan to be submitted to the Department of Finance for approval, or identify minor capital outlay funds
- Work with DSA-AC to identify items to be completed through in-house maintenance
- DSA/AC is requiring building or facility owners to seek the advice of qualified consultants that can provide expertise in Universal Design
- All surveys and mitigation plans must be signed by DSA approved plan reviewconsultant or

PHASE IV: IMPLEMENTATION
Implement all items in the Self Evaluation and remove structural noncompliance items of the Transition Plan

PROGRAMS AND SERVICES

The ADA Analyst must continue to monitor and enforce all self evaluation items with support and help from DOR to resolve all ADA related issues and problems

BUILDING OR FACILITY

After the plans are submitted, DSA will provide the following:

- Review and approve all construction documents related to the facility plan
- Each project must include a complete verified report signed by the Architect of record and DSA approved plan review consultant or ICBO certified Architect

PHASE V: ONGOING SUPPORT
Continue involvement and resolution of all problems and issues related to ADA. Provide periodic assessment related to the proper maintenance of all access features

PROGRAMS AND SERVICES

After the five year ADA correction plan is completed and all barriers are removed, the ADA Analyst with the help and support from DOR and DSA-AC will:

- Continue involvement in resolving all problems and issues related to the ADA
- Provide periodic evaluation of the agency ADA compliance status
- Provide periodic assessment related to the proper maintenance of all access features
- Provide final report of the agency ADA compliance status and maintain it on file for public inspection and comments.

BUILDING OR FACILITY

- Make sure that the operation and maintenance of accessibility features are maintained when there are repairs and additions

Acceptance of Construction Documents Policy

00-02

Effective 7-1-00

This policy is applicable to projects under DSA jurisdiction only. DSA's Access Compliance jurisdiction encompasses state-funded buildings, facilities and universities, as well as publicly-funded elementary schools, secondary schools, and community colleges. Local jurisdictions may or may not adopt similar methods of administering current code requirements, determining equivalent facilitation, or defining acceptable parameters as necessary in enforcing the existing California Building Standards Code as allowed under Government Code Section 4451(f) of the California Code of Regulations.

Issue: The Division of the State Architect/Access Compliance (DSA/AC) accepts projects when the plans and specifications are complete and accurate. Plans and details shall be consistent and correct as required by the California Building Standards Code and all DSA/AC published policies applicable to Access Compliance.

Work may be considered for rejection for any of the following reasons:

- Excessive coordination errors (no more than ten per project). Civil, architectural, structural, mechanical, plumbing, landscaping, electrical, and specifications should be coordinated to match.
- Excessive, incomplete dimensioned details from site plan, floor plans, and interior elevations.
- Absence of coordinated signage schedule indicating the location and mounting height of signs.
- Absence of accessible parking indicating dimensioned clearances, slopes, transition between material, signage, parking ratio.
- For modernization projects, no path of travel is indicated to accessible toilets and area of new work.
- Incomplete plan set as indicated on the index sheet.
- Lacking application, check, plans or specifications.
- Assembly rooms without seating plans and details. No accessible seating locations with companion seating. Non-equitable lines of sight.
- Doors without all required clearances fully dimensioned.
- Missing details for ramps, curb cuts, transitions, elevators, stairs, lifts, thresholds, cross slopes.
- Absence of dimensioned restroom plans to enlarged scale ¼" and interior elevations with fixture location and accessory mounting heights.
- Incomplete door schedule with
  - size of doors
  - hardware groups

- threshold details referenced
- signage coordination

· Assembly rooms without assistive listening devices as required with signage.

Approving Authority:

Michael J. Mankin, AIA
Manager, Access Compliance Program

END OF POLICY MANUAL

Official Comments for DSA - Universal Design

- Phase I – Preliminary Plan Review Guidelines
- Phase II – Access Plan Review Checklist

Comments

PRELIMINARY PLAN REVIEW GUIDELINES

(Preliminary Program Requirements for State Owned and State Leased Facilities)

INTRODUCTION

In construction projects (new and existing) every effort should be made to design and build a facility, or any portion thereof, so that it can be approached, entered, and used by individuals with disabilities (including mobility, sensory, and cognitive impairments) **easily and conveniently**.

Early recognition and integration of accessibility and usability principles shall be a fundamental part of the design process. In conjunction with other determining, traditional parameters, such as functionality, sustainability, feasibility, seismic and fire safety, etc. these guidelines will result in a more successful design.

The goal of the information that follows is to give guidance to the project planner/designer in order that accessibility and usability of all facilities for State use comply with the intent of the California Government Code Section 4450, the California Health and Safety Code Section 19955, the California Civil Code Section 51, and Section 35.130(b)(4) of Title II of the Americans with Disabilities Act (ADA).

It is **not** the objective of the Office of Universal Design to impose or enforce a certain design or style. Instead, the purpose of this manual is to serve as the source for accessibility criteria to be used during the selection of the site, the project scoping, the design programming, and the preliminary design phase.

Note: See appendix at the end of this checklist for commonly used abbreviations

© 2003 DSA/OUD

P1 Project designer (PD) shall address the following marked or circled items, and any additional plan review comments on drawings and specifications before submittal to DSA for access compliance (AC). Any questions or points of disagreement must be resolved prior to submittal to plan reviewer (PR).		Justification or Code Citation (CCR Title 24, u.o.n. *Fed. Codes in Italic*	Location of Item on Plans	Comments Notes Examples
Check List P1 PRELIMINARY PLAN REVIEW FOR NEW CONSTRUCTION				
During the review process, the following issues should be evaluated with regard to accessibility requirements: **A. APPROACH** • A.1 Off-Site Path of Travel • A.2 On-Site Path of Travel • A.3 Parking, Passenger Drop-off and Loading Zones • A.4 Exterior Materials (Surfacing, Paving Materials, etc.) **B. BUILDING ENTRANCES** • B.1 Building Position and Entrance Locations • B.2 Entrance Design **C. FLOOR PLAN DEVELOPMENT** • C.1 Lobby • C.2 Horizontal Access • C.3 Vertical Access **D. OCCUPANCY RELATED REQUIREMENTS** • D.1 Group A Occupancy (Assembly) • D.2 Group B and M Occupancies (Business, Services, and Mercantile) • D.3 Group E Occupancy (Educational) • D.4 Factories and Warehouses • D.5 Group H Occupancy (Hazardous) • D.6 Group I Occupancy (Hospital) • D.7 Group R Occupancy (Lodging) • D.8 Group S and U Occupancies (Storage and Utility) • D.9 Outdoor Occupancies **E. GENERAL CONSTRUCTION REQUIREMENTS** • E.1 Bathing and Toilet Facilities • E.2 Elevators and Special Access (Wheelchair) Lifts • E.3 Other Building Components • E.4 Employee Areas • E.5 Parking, Passenger Drop-off and Loading Zones • E.6 Doors and Gates • E.7 Stairs • E.8 Ramps • E.9 Other				Note: Departures from these requirements can only be granted by the DSA/AC and must be obtained in writing.

© 2003 DSA/OUD

P1 Project designer (PD) shall address the following marked or circled items, and any additional plan review comments on drawings and specifications before submittal to DSA for access compliance (AC). Any questions or points of disagreement must be resolved prior to submittal to plan reviewer (PR).		Justification or Code Citation (CCR Title 24, u.o.n. *Fed. Codes in Italic*	Location of Item on Plans	Comments Notes Examples
Check List P1 PRELIMINARY PLAN REVIEW FOR NEW CONSTRUCTION				
A. APPROACH				
A.1 Off-Site Path of Travel				
A1.1 The nature and location of the chosen site (for example, its topography) should not substantially limit access for different approaches from the surrounding area. Consider: a. Pedestrian ways (sidewalks, walkways, plazas, parks). b. Public transportation (bus, rail). c. Private transportation (drop-off, paratransit, taxicab). d. Off-site parking.				28 CFR 35.130(b)(4) A public entity may not, in determining the site or location of a facility, make selections – (i) That have the effect of excluding individuals with disabilities from, denying them the benefits of, or otherwise subjecting them to discrimination; or (ii) That have the purpose or effect of defeating or substantially impairing the accomplishment of the objectives of the service, program, or activity with respect to individuals with disabilities.
A.1.2 The nature and location of the chosen site should not substantially limit access from off-site transit stops to the planned site entries. Consider: a. Overall distance to pedestrian crossings, bus stops, drop-offs, off-site parking, etc. b. Overall level change from pedestrian crossings, bus stops, drop-offs, off-site parking, etc. to planned site entries. c. Cross slopes of walkways from pedestrian crossings, bus stops, drop-offs, off-site parking, etc. to planned site entries. d. Surface type and condition of existing pathways from pedestrian crossings, bus stops, drop-offs, off-site parking, etc. to planned site entries. e. Pathways from pedestrian crossings, bus stops, drop-offs, off-site parking, etc. to any exterior area where services or activities are being offered.				
A.1.3 Location and number of planned site entries should be chosen with special regard to existing pathways of the surrounding area.				
A.1.4 The design and location of site entries should not reduce accessibility and usability of surrounding existing pathways (e.g. planned driveways that would create a cross slope for sidewalk users).				
A.1.5 Site entry points should be chosen with special regard to the planned building. a. Overall distance to planned building entries/exists. b. Overall level change of pedestrian ways to planned building entries/exits. c. Cross slopes of pedestrian ways to planned building entries/exits. d. Layout of on-site pedestrian ways to planned building entries/exits.				
A.2 On-Site Path of Travel				
A.2.1 The nature of the site should not limit access from site entry points to any entrance and ground floor exit of the planned facility.				

Check List P1 PRELIMINARY PLAN REVIEW FOR NEW CONSTRUCTION

		Justification or Code Citation (CCR Title 24, u.o.n. *Fed. Codes in Italic*	Location of Item on Plans	Comments Notes Examples
A.2.2 The nature of the site should not limit access from site entry points to any exterior area where services or activities are being offered.				
A.2.3 The nature of the site should not limit access from on-site transportation end points to any entrance and ground floor exit of the planned facility.				
A.2.4 The nature of the site should not limit access from on-site transportation end points to any exterior area where services or activities are being offered.				
A.2.5 Site development and grading shall be designed to provide access on all pedestrian paths of travel. Consider:				
a. Slopes on planned pedestrian ways up to 5 percent (1:20).				
b. Slopes on planned pedestrian ways with slopes between 5 percent and 8.3 percent (1:12).				
c. Ratio of slope and length of planned pedestrian ways.				
d. Swales along or crossing accessible path of travel creating non-compliant slopes or cross slopes.				
e. Swales within 48" of accessible parking spaces creating non-compliant slopes or cross slopes.				
A.2.6 Site development and landscaping should take into account existing and planned vegetation as well as anticipated grow. Consider:				
a. Plants protruding into pedestrian circulation areas (e.g. tree branches).				
b. Plants with spikes or thorns adjacent to pedestrian circulation areas.				
c. Irrigation and precipitation run-off, including swales.				
d. Warping of pedestrian ground surface through root growth.				
A.3 Parking, Passenger Drop-off and Loading Zones				***28 CFR 35.130(b)(7)*** *A public entity shall make reasonable modifications in policies, practices, or procedures when the modifications are necessary to avoid discrimination on the basis of disability, unless the public entity can demonstrate that making the modifications would fundamentally alter the nature of the service, program, or activity.*
A.3.1 Self-parking, private and public transportation are integral parts of the ADA Title II program accessibility requirement. Therefore, an adequate number of accessible stalls, bus pads and passenger drop-offs must be allocated within the vicinity, even if the facility does not provide on-site parking or is not responsible for the public rights-of-way. Deviations from this obligation require a written finding of unreasonable hardship by the Director of the State agency offering the program and must be submitted to DSA/AC for approval. Consider:		Gov. Code § 4451[f] Civil Code § 54		
a. Nature and location of program.				
b. Number of anticipated clients/employees.				
c. Availability and distance to associated off-site parking.				
d. In parking structures, vertical clearance of 98" (8'-2") at all entrances, at the accessible parking spaces, and along vehicle access routes to and from such spaces.		1130B		
e. Vertical clearance of 114" (9'-6") at accessible passenger loading zones and along at least one vehicle access route to and from such areas.		1131B.2		

Check List P1 PRELIMINARY PLAN REVIEW FOR NEW CONSTRUCTION

		Justification or Code Citation (CCR Title 24, u.o.n. *Fed. Codes in Italic*	Location of Item on Plans	Comments Notes Examples
A.4 Exterior Materials				
A.4.1 Ground surface materials on accessible pedestrian routes, including walks, ramps, and stairs should be chosen to allow convenient and safe travel for individuals with mobility and visual impairments. Consider:				
a. Contrast in color, shade, and texture of adjacent surface materials for easy detection of elements and as means of way finding.				
b. Stability, firmness, and slip resistance of materials.				
c. Scale and properties of individual surface material units (e.g. cobble stones or pavers).				Natural stone, brick or concrete pavement stones can result in up to 6% cross slope between the wheels of a wheelchair, even if the overall slope of the paved area is at 2% and individual level changes of paver units do not exceed ½" at 1:2.
d. Warping and cracking through root growth.				
e. Location of grates, drains, and manhole covers.				
A.4.2 Materials of vertical architectural elements, such as walls, curbs, rails, fences, etc., along accessible pedestrian routes, including walks, ramps, and stairs should be chosen to allow convenient and safe travel for individuals with mobility and visual impairments. Consider:				
a. Contrast in color, and shade of adjacent surfaces for easy detection of elements.				
b. Reflective properties of surfaces (glare effect).				
c. Texture and of surfaces.				
d. Smooth leading edges at bottom of walls, curbs, and fences.				
e. Rounded corners.				

© 2003 DSA/OUD

B. BUILDING ENTRANCES

B.1 Building Position and Entrance Locations

B.1.1 The chosen position of the planned building and associated elements should ensure direct, safe, and convenient access from on- and off-site pedestrian ways and transportation stops to the nearest primary entrance. Consider:

a. Elevation of building ground floor.
b. Elevations of adjacent roadways, sidewalks, parking lots.
c. Cross and running slopes of walks and ramps.
d. Overall distance and level change leading to/from the building.

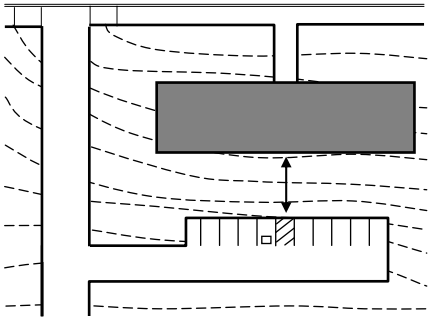

i) Slope rises 3 ft between parking and entry, making accessible path difficult to provide.

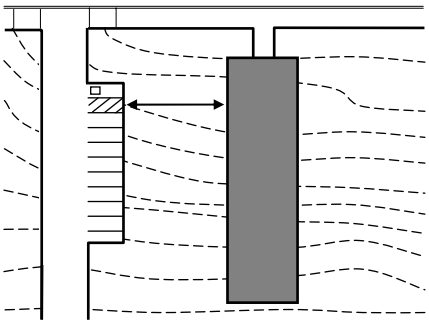

ii) Slope rises 1 ft between parking and entry, making accessible path easy to provide.

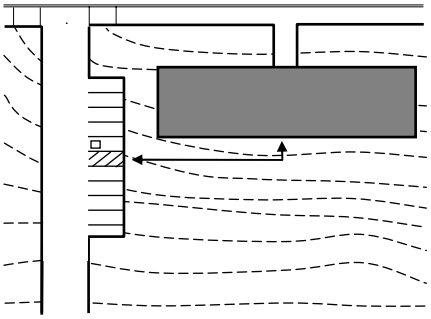

iii) Slope rises 1 ft between parking and entry, making accessible path easy to provide.

B.1.2 The chosen location of planned building entrances should ensure direct access from on- and off-site pedestrian ways and transportation stops to the nearest primary entrance. Minimize overall distance and level change leading to/from the building.

B.1.3 All entrances and all ground floor exits must be connected to an accessible path of travel.

B.1.4 The accessible path of travel should coincide with the route for the general public.

B.1.5 It is recommended that the distance from accessible parking spaces to associated primary building entrances should not exceed 200 ft.

B.1.6 If, in addition to an accessible path of travel, an inaccessible path of travel is provided from on- and off-site pedestrian ways and transportation stops to building entrances (e.g. stairs), than the accessible path should be provided with the same amenities. Consider:

a. Illumination.
b. Roofed structures.
c. Way finding elements.
d. Materials and finish.
e. Security and safety.

B.2 Entrance Design

B.2.1 All primary building entrances for public use should be easily identifiable. Consider:

a. Day and night use (e.g. reflection of the sun, illumination at night).
b. Use during the four seasons (e.g. would a leafed tree obstruct the view to an entrance)
c. Location and visibility of entrance in relation to the various approaches.
d. Accentuated design elements that “signify” an entrance as such, including envisioned materials, colors, proportion, and size, way finding features, and “guiding” path of travel.
e. Location and design of other entrances.

B.2.2 Primary building entrances should be designed and situated to allow convenient building entry and exit. Consider:

a. Shelter from local weather (e.g. rain, snow, ice).
b. Site specific wind conditions (e.g. a constant breeze might make it impossible to adjust door closers to 8.5 lbs max. push/pull force. Here, the entrance could be relocated to the lee side of the building, automatic sliding or power assisted doors could be provided, or a wind-breaker be installed).
c. Number of doors and size of landing should be adequate for anticipated capacity of use.

 © 2003 DSA/OUD

		Justification or Code Citation (CCR Title 24, u.o.n. *Fed. Codes in Italic*	Location of Item on Plans	Comments Notes Examples
Check List P1 PRELIMINARY PLAN REVIEW FOR NEW CONSTRUCTION				
d. California style "smoker's corners" (to be located away from entrances and main circulation paths).				
e. Revolving doors.				
B.2.3 Primary building entrances should be situated to allow for safe and secure building entry and exit. Consider:				
a. Entry and exit areas with obstructed visibility can compromise public security (e.g. avoid recessed entry ways, blind corners, alcoves, low hanging trees, shrubs).				
b. Visibility that allows monitoring of areas, which are difficult to supervise from public spaces.				
c. Wind vestibules should be adequately sized to prevent individuals with wheelchairs from being trapped.				
B.2.4 During periods of partial or restricted use of a building or facility, the entrances used for primary access must be accessible to and usable by persons with disabilities.				

© 2003 DSA/OUD

P1 Project designer (PD) shall address the following marked or circled items, and any additional plan review comments on drawings and specifications before submittal to DSA for access compliance (AC). Any questions or points of disagreement must be resolved prior to submittal to plan reviewer (PR).		Justification or Code Citation (CCR Title 24, u.o.n. *Fed. Codes in Italic*	Location of Item on Plans	Comments Notes Examples
Check List P1 PRELIMINARY PLAN REVIEW FOR NEW CONSTRUCTION				
C. FLOOR PLAN DEVELOPMENT				
C.1 Lobby				
C.1.1 Reception, security counters, or building directory should be designed and located to be easily recognized. Consider: a. Proximity to entrance and view line. b. Direction of visitor approach. c. Position, size, and height of counters or directory.				
C.2 Horizontal Access				
C.2.1 All portions of the building must be designed to be accessible to and usable by people with disabilities.				For general exceptions see 1103B.1 and 1114B.1.2.
C.2.2 The layout of the floor plan should not substantially limit access from building entrances and lobby to and in between essential spaces and areas. Consider: a. Location of primary function areas (assembly and meeting rooms, waiting areas and offices, classrooms and laboratories, libraries, gyms and participation areas). b. Location of supporting areas and equipment (e.g. restrooms, locker rooms, telephones, drinking fountains, fire life safety equipment, ATMs, vending machines, cafeterias, service counters, and outdoor activity areas).				
C.2.3 The layout of the floor plan should allow for safe and secure use of the building Consider: a. Visibility that allows monitoring of all portions of circulation areas. b. Use of visual landmarks in corridors, hallways, and lobbies that can be used as orientation cues, for example, changes in illumination level, colors, pattern, wall murals, location of specific equipment or other architectural features (e.g. an exterior view). c. Large, undefined areas, irregular route path (e.g. intersections not at 90 degrees, corridor not straight) can cause user disorientation and confusion. d. Irregular spaced elements lining the walls or elements protruding into the path of travel more than others can create difficult situations. e. Consistency with general code requirements and specific design elements throughout the building. f. Location and detectability of fire life safety equipment. g. Stairs should not be located in the direct path of travel.				

h. Stairs and ramps should be set back to allow handrail extensions to extent in the direction of the path of travel.

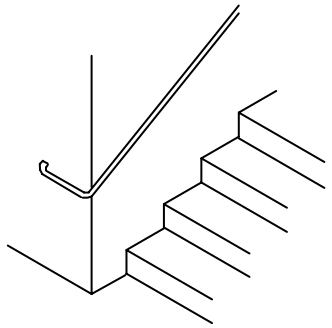

Not Compliant
i) Insufficient stair recess: Handrail at bottom of stairs does NOT extend one tread width plus 12 inches in the direction of the stair run.

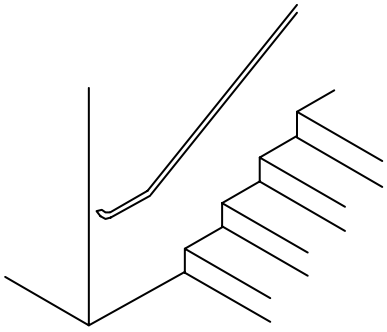

Compliant
ii) Correct stair recess: Handrail at bottom of stairs does extend one tread width plus 12 inches in the direction of the stair run.

C.2.4 The layout of the floor plan should not substantially limit convenient access within aisles, corridors, hallways, vestibules, ramps, stairs, open spaces, etc. Consider:

a. Width of circulation paths.
b. Clear maneuvering clearances for turning, passing, or operation of elements (e.g. hinge-side approaches to pull side of swinging doors shall have maneuvering space that extends 36” minimum beyond the latch side of the door)
c. Obstructions in the path of travel (e.g. out-swinging doors, handrails, columns, telephones, drinking fountains, fire life safety equipment, etc).

 © 2003 DSA/OUD

Check List P1 PRELIMINARY PLAN REVIEW FOR NEW CONSTRUCTION

		Justification or Code Citation (CCR Title 24, u.o.n. *Fed. Codes in Italic*	Location of Item on Plans	Comments Notes Examples
C.2.5 Distance from any primary function areas to toilet facilities serving should not exceed 200 feet.				
C.2.6 Distance from any primary function or supporting area to vertical access (interior ramps, elevators, stairs) is recommended not to exceed 200 feet.				
C.3 Vertical Access				
C.3.1 All levels of the building must be accessible and be connected to an accessible path of travel. Consider: a. All floor levels including split levels b. Platforms and podiums c. Sunken areas d. Mezzanines e. Balconies f. Roof gardens *Exceptions: Buildings that fulfill all of the following:* *(1) not open to the general public and,* *(2) no more than two stories and,* *(3) housing no more than five persons in the story above or below the accessible ground floor and,* *(4) less than 500 square feet in the story above or below the accessible ground floor and,* *(5) a reasonable portion of all functions is provided on the accessible level.* NOTE: The elevator exception for privately funded facilities [CBC 1103B.1.2 and ADAAG 4.1.3(5)(a)] cannot be used for any project under DSA jurisdiction, even if the facility is not owned by the State of California (e.g. leased facilities).		1103B.1 1120B 1124B		Freight elevators shall not be considered as meeting the requirement, unless the only elevators provided are used as combination passenger and freight elevators for the public and employees.
C.3.2 In new construction of buildings which exceed 10,000 square feet on any floor, accessible means of vertical access shall be provided within 200 feet of each stairs and each escalator.		1103B.1		Exceptions: 1103B.1.1 1103B.1.2
C.3.3 Accessible means of vertical transportation (elevators, ramps, lifts) should be in close proximity of and visible from any stairway or escalator, which is used by the general public.				
C.3.4 Accessible means of vertical transportation (elevators, ramps, lifts) should coincide, to the maximum extent feasible, with the regular vertical pedestrian circulation.				
C.3.5 Accessible means of vertical transportation (elevators, ramps, lifts) should be within 200 ft of any primary entrance and primary function area.				
C.3.6 When exits are required (by Chapter 10 of the CBC) but are not accessible (e.g. stairs, escalators) an area for evacuation assistance, adjoining an accessible path of travel, must be provided.		1114B.2.2		Exceptions: 1114B.2.1 for new construction

Check List P1 PRELIMINARY PLAN REVIEW FOR NEW CONSTRUCTION

D. OCCUPANCY RELATED

D.1 Group A Occupancy (Assembly) — 1104B

D.1.1 All assembly places where seating is provided must provide accessible spaces for persons using wheelchairs and semi-ambulant persons in each floor, mezzanine, balcony. Accessible seating cannot be clustered and must be provided in a variety of locations (i.e. admission and lines of sight) and be integrated with regular seating. Consider:

a. Direct access from/to primary entrance or main lobby.
b. Direct access to/from restrooms.
c. Accessible path of travel to/from podiums and stages to coincide with the general route.
d. Maneuvering clearance for persons using wheelchairs.
e. Sloped surfaces

D.1.2 In sports arenas and other facilities where the audience may stand during events, wheelchair spaces must provide lines of sight over standing, 72” tall spectators (provide schematic section with lines of sight).

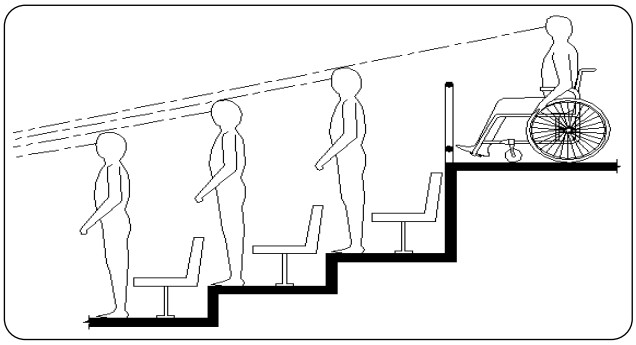

D.1.3 In athletic facilities both sides of bleachers and grandstands must be accessible (home and guest side).

D.1.4 All participation areas must be accessible and be on an accessible path of travel. Consider:

a. Tennis, racquetball and handball courts.
b. Gymnasium floor areas and general exercise rooms.
c. Basketball, volleyball and badminton, and bowling.
d. Swimming pool deck areas must be accessible and an assisting device provided to assist persons with disabilities in gaining unassisted entry into the pool.
e. Athletic team rooms and facilities, playing fields and running tracks (both, home and guest).
f. Clubrooms.
g. Sanitary and locker facilities, dressing rooms, practice rooms.
h. Choir and band rooms, orchestra pits.

D.1.5 All areas of dining, banquet, and bar facilities, including raised or sunken dining areas, bar counters, loggias, and outdoor

© 2003 DSA/OUD

	seating must be accessible. Accessible seating cannot be clustered and must be provided in each area.			
D.1.6	Overall dimensions and design must take into account anticipated seating layout (fixed and non-fixed) to ensure required aisle width to all areas (provide schematic floor plan indicating aisle widths). Circulation aisles and pedestrian ways, including corridors and hallways shall be sized as required. Consider: a. 36” clear width, if served by cross aisles on one side. b. 44” clear width, if served by cross aisles on both sides. c. 90 degree turns can be made from a 36” wide passage into another 36” passage if the depth of each leg is a minimum of 48” on the inside dimensions of the turn. d. U-turns around an obstruction less than 48” wide can be made if the passage width is 42” min. and the base of the U-turn space is a 48” min. wide. e. Occupancy loads, passing and turning space.		1104B.5.4,5,8 1133B.3 1133B.6		Aisle Width
D.1.7	The accessible path of travel onto podiums and stages must coincide with or should be equal to the general route.		1104B.3.10 1133B.3.11	

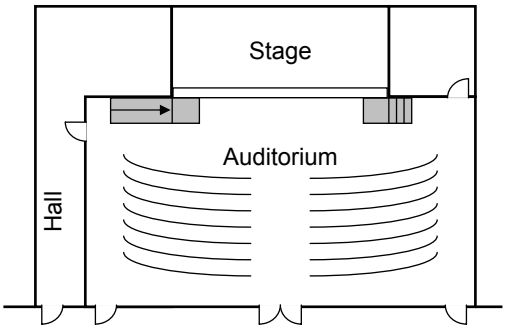

Compliant

i.) Equal access onto the stage is achieved by providing similar approaches to ramp and staircase.

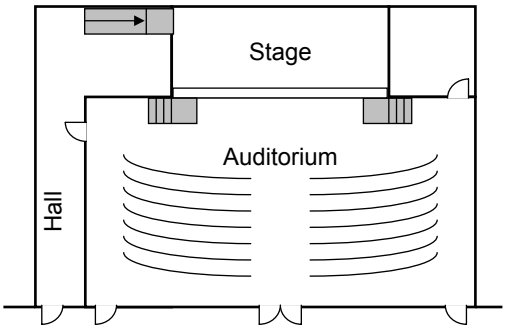

Not Compliant

ii.) Person in a wheelchair must leave the auditorium in order to get up on stage, while stairs are available within the auditorium.

Check List P1 PRELIMINARY PLAN REVIEW FOR NEW CONSTRUCTION

		Justification or Code Citation (CCR Title 24, u.o.n. *Fed. Codes in Italic*	Location of Item on Plans	Comments Notes Examples
D.1.8 When a wheelchair lift is being used to gain access onto podiums and stages it should be located out of view from the auditorium together with the stairs.				

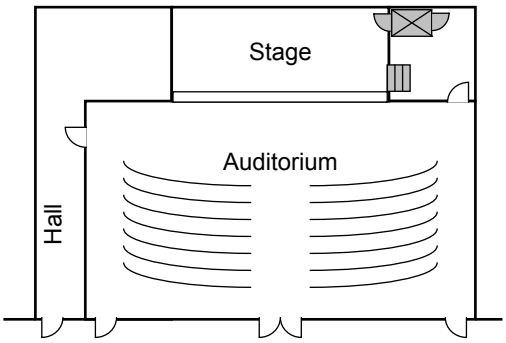

Compliant
iii.) Equal access onto the stage is achieved by providing similar approaches to wheelchair lift and staircase through enclosed side-stage.

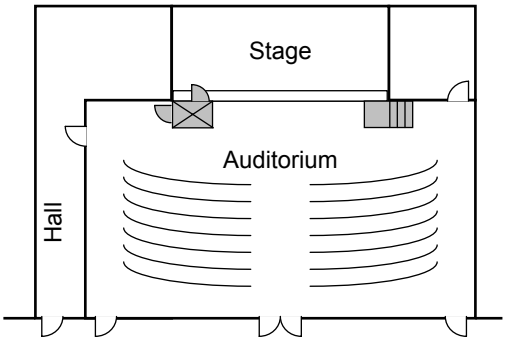

Not Compliant
iv.) Operation of wheelchair lift is within view of the auditorium, making it awkward for people in wheelchair to use.

D.2. Group B and M Occupancies (Business, Services, and Mercantile)		1105B 1110B		Where the number of employees exceeds four, separate toilet facilities for each sex are required (CBC 2902.3).
D.2.1 All areas of specialized business professional offices, including those related to professional medicine or dentistry, insurance, real estate, attorneys, credit bureaus, consultants, counseling, and accounting must be accessible and be on an accessible path of travel. Consider:				
a. Client/visitor areas, office areas, together with related toilet rooms. b. Conference rooms, counseling rooms or cubicles and similar areas.		1105B.3.1.1		Business Professional Offices

Check List P1 PRELIMINARY PLAN REVIEW FOR NEW CONSTRUCTION

		Justification or Code Citation (CCR Title 24, u.o.n. *Fed. Codes in Italic*	Location of Item on Plans	Comments Notes Examples
c. Access to/from/through employee work areas (36" min. wide clear).				
d. Professional medical/dental offices (see also 1109B).				
D.2.2 All areas of sales establishments, including outlets for all general and special merchandise and equipment, including personal and household furnishings and supplies, foods, sporting equipment, office supplies, vehicles and related parts and supplies, building materials, and pet shops must be accessible and be on an accessible path of travel. Consider:		1105B.3.1.2 1110B.1&2		Sales Establishments
a. Merchandise display areas, client/visitor areas, office areas, together with related toilet rooms.				
b. Fitting and dressing rooms 60"x84" min.		1110B.1.7		
c. Checkstands, service counters, etc. (at least one of each type at each location)		1110B.1.3		
d. Conference rooms, show rooms, and similar areas.				
e. Access to/from/through employee work areas (36" min. wide clear).				
D.2.3 All areas of personal and public service facilities, including banks, savings and loan companies, credit unions, newspaper and printing establishments, photographic studios, laundermats, cleaning and laundry outlets, veterinarian clinics and hospitals, automobile rental agencies, travel bureaus, public utility facilities, police stations and detention facilities, courtrooms, and fire stations shops must be accessible and be on an accessible path of travel. Consider:		1105B.3.1.3		Personal and Public Service Facilities
a. Client/visitor areas, office areas, together with related toilet rooms.				
b. Conference rooms, training and classrooms, dispatch rooms, and similar areas.				
c. Access to/from/through employee work areas (36" min. wide clear).				
d. ATMs used by a financial institution (see also 1117B.7).				
e. Public tour areas, to the extent that such public tours are conducted, or where the public is permitted to walk in such areas.				
f. Visitor overlook facilities, orientation areas and similar public–use areas, together with related toilet rooms and parking.				
g. Detention–area visitor rooms.				
h. Detention, holding, isolation, safety, group, and detox-cells for male, female, adult, and juvenile, together with related sanitary facilities.				
i. Courtroom areas, incl. judge's chambers and bench, counsel tables, jury box and deliberation room, witness stand and public seating.				
D.2.4 Overall dimensions and design must take into account anticipated layout (fixed and non-fixed) to ensure required aisle width to all areas (provide schematic floor plan indicating aisle widths). Circulation aisles and pedestrian ways, including corridors and hallways shall be sized as required. Consider:		1105B.3.6.1 1110B.2.1 1133B.3 1133B.6		Aisle Width
a. 36" clear width, if served by cross aisles on one side.				
b. 44" clear width, if served by cross aisles on both sides.				

c. 90 degree turns can be made from a 36” wide passage into another 36” passage if the depth of each leg is a minimum of 48” on the inside dimensions of the turn.
d. U-turns around an obstruction less than 48” wide can be made if the passage width is 42” min. and the base of the U-turn space is a 48” min. wide.
e. Occupancy loads, passing and turning space.

D.3 Group E Occupancy (Educational) — 1106B

D.3.1 Five percent, but not less than one of each type of all workstations, teaching facility cubicles, study carrels, and equipment in classrooms, laboratories, science classrooms, workshops, etc. must be accessible and usable (provide schematic floor plan indicating paths of travel and maneuvering clearances along with applicable elevations). Consider: — 1106B.2, 3 — Classrooms, Laboratories, Workstations

a. Emergency equipment, incl. eyewash, emex-shower, fire extinguisher, alarm pulls, intercom etc.
b. A/V equipment, incl. TV, VCR, projectors, etc.
c. Language, dental, audiovisual, typing, and drafting workstations.
d. Science workstations, incl. water, gas, air, electrical, etc.
e. Science equipment, incl. fume hoods, storage, sinks, etc.
f. Workshop tools, incl. wood, metal, stone, and plastic, etc.
g. Dry rooms, cold rooms, walk-in freezers, sterile rooms, spray booth, darkrooms, etc.

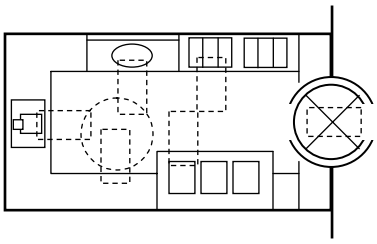

Compliant Darkroom

60” turning radius, 30”x48” clear space at each different type of equipment, door opening 32” clear, inner diameter of door 57” clear provided.

D.3.2 If a facility or a portion of a facility is equipped with an air pressurization system (high or low) the design must ensure that compliant door opening forces are met. Consider: — 1133B.2.5

a. Automatic or power assisted doors.
b. Sliding doors.
c. In-and-out swinging doors.

D.3.3 All general use areas of libraries must be accessible, incl. housing card files, book stacks periodicals, reading and reference areas, information desks, circulation counters, — 1106B.4 — Libraries

		Justification or Code Citation (CCR Title 24, u.o.n. *Fed. Codes in Italic*	Location of Item on Plans	Comments Notes Examples
computer stations, copy machines, single and group study rooms, mezzanines, restrooms, etc. Consider:				
a. Main aisles width 44” min. (see also D.3.4 for additional aisle width req.).				
b. Side aisles width 36” min. and no longer than 20 ft.		1004.3.2.4		
c. 54” max. shelf height for customer-use open book stacks, unless an attendant is available.				
d. 54” max. shelf height for employee-use only close book stacks.				
e. Location and height of book drop-off.				
f. 48” max. height for card catalogs.				
D.3.4 Overall dimensions and design of educational occupancies must take into account anticipated layout (fixed and non-fixed) to ensure required aisle width to all areas (provide schematic floor plan indicating aisle widths). Circulation aisles and pedestrian ways, including corridors and hallways shall be sized as required. Consider:				
a. 36” clear width, if served by cross aisles on one side.				
b. 44” clear width, if served by cross aisles on both sides.				
c. 90 degree turns can be made from a 36” wide passage into another 36” passage if the depth of each leg is a minimum of 48” on the inside dimensions of the turn.				
d. U-turns around an obstruction less than 48” wide can be made if the passage width is 42” min. and the base of the U-turn space is a 48” min. wide.				
e. Occupancy loads, passing and turning space.				
D.4 Factories and Warehouses		1107B		Facilities under DSA jurisdiction cannot apply Exceptions of 1103B.1
D.4.1 The following areas in factories must be made accessible and be on an accessible path of travel:				
a. Major or principal floor areas.				
b. Office areas.				
c. Sanitary facilities serving these areas.				
D.4.2 The following areas in warehouses must be made accessible and be on an accessible path of travel:				
a. Areas which are located on the floor nearest grade and those areas on other floors that are otherwise provided with access by level entry, ramp or elevator must be made accessible.				
b. Office areas.				
c. Sanitary facilities serving these areas.				
D.5 Group H Occupancy (Hazardous)		1108B		
D.5.1 Areas to be made accessible and be on an accessible path of travel include those that are used by the public as customers, clients, visitors, or which are potential places of employment. Consider:				
a. Sanitary facilities.				

Check List P1 PRELIMINARY PLAN REVIEW FOR NEW CONSTRUCTION

		Justification or Code Citation (CCR Title 24, u.o.n. *Fed. Codes in Italic*	Location of Item on Plans	Comments Notes Examples
b. Entrances, stairs, ramps, doors, turnstiles, corridors, walks and sidewalks and hazards. c. Floors and levels. d. Employee Work Areas.				
D.6 Group I Occupancy (Hospital)		1109B 1114B.1.1		
D.6.1 At least one accessible entrance must be protected from the weather and incorporate a passenger loading zone. Consider: a. Canopy or roofed overhang to cover entire area, incl. drop-off zone and access aisles on both sides of the vehicle. b. Parallel access aisle 20'x5' min. c. Slope of entire area 2% max. in any direction. d. Level transition (preferred) or curb ramp. e. Vertical clearance 114" min.		1109B.2		**EXCEPTION:** Clinics and other medical facilities that are not intended for patient stays of 24 hours or more, and that are located above the first story of a building, and that do not have a dedicated entrance from the exterior of the building at the first story.
D.6.2 Patient bedrooms and associated toilet rooms must be made accessible as follows: a. Long–term–care facilities, incl. skilled nursing facilities, intermediate care facilities, bed and care, and nursing homes must have at least 50 % of patient bed- and toilet rooms accessible. b. General–purpose hospitals, psychiatric facilities, and detoxification facilities must have at least 10 % of patient bed- and toilet rooms accessible. c. Hospitals and rehabilitation facilities that specialize in treating conditions that affect mobility, or units within either that specialize in treating conditions that affect mobility, must have all patient bed- and toilet rooms accessible.		1109B.3		
D.6.3 All Public-use and common use areas and sanitary facilities serving them must be accessible and be on an accessible path of travel. Consider: a. Diagnostic and treatment areas, incl. at least one dressing room, sanitary facility, etc., for each unit or suite. b. Waiting areas, offices. c. Offices and suites of physicians, dentists, therapist, etc.		1109B.3		
D.6.4 Accessible patient bedrooms and toilet rooms must be accessible. Consider: a. Clear 60" diameter or T-shaped turning space in bedroom. b. 36" clear space along each side of the bed. c. Accessible door and door maneuvering space. d. Toilet rooms for accessible patient bedrooms must comply with 1115B.		1109B.4 1133B.2		
D.6.5 At facilities providing medical care and other services for persons with mobility impairments, parking spaces must be made accessible as follows: a. At outpatient units and facilities 10% of the total number of parking spaces must be made accessible.		1129B.3		

Check List P1 PRELIMINARY PLAN REVIEW FOR NEW CONSTRUCTION

		Justification or Code Citation (CCR Title 24, u.o.n. *Fed. Codes in Italic*	Location of Item on Plans	Comments Notes Examples
b. At units and facilities that specialize in treatment or services for persons with mobility impairments 20 % of the total number of parking spaces must be made accessible.				
D.7 Group R Occupancy (Lodging/Residential)		1111B		EXCEPTION: When the enforcing agency determines that compliance with any regulation under this section would create an unreasonable hardship, an exception shall be granted when equivalent facilitation is provided.
D.7.1 All Public-use and common use areas and sanitary facilities serving them must be accessible and be on an accessible path of travel. Consider:				
a. General parking and passenger drop-off.				
b. Receptions or lobbies, offices.				
c. Recreational facilities, incl. swimming pools, saunas, play areas.				
d. Amenities, incl. conference rooms, TV rooms, laundries.				
D.7.2 See Tables 11B-3 and 11B-4 for required number of accessible rooms or suites in hotels, motels, inns, dormitories resorts, homeless shelters, halfway houses, transient group homes and similar places of transient lodging (less than 30 days),. Consider:				
a. Available range of accommodation (size, cost, amenities).				
b. Door clearances.				
c. 36” clear space along each side of the bed (provide furniture layout indication dimensions of clear space).				
d. Recommended: clear 60” diameter or T-shaped turning space in bedroom.				
e. Kitchen facilities.				
f. Bathrooms (fully accessible and additional units with roll-in showers, sliding or out-swinging doors).				
g. Access to windows (if operable), HVAC controls.				
h. Assigned or associated parking.				
D.7.3 Dormitory rooms beyond those specified in Tables 11B-3 and 11B-4 (i.e. if stays generally exceed 30 days) must comply with the adaptability requirements of 1111B.5		1111B.4.7		
D.7.4 Buildings and complexes containing one or more publicly funded dwelling units must be accessible as required by Chapter 11A. In addition, when Federal funds are being used the project has to comply with UFAS (per ABA) and its 5%-fully-accessible-units requirement.		1111B.5 *UFAS: 4.1.3*		NOTE: This Section, applicable to any publicly funded dwelling unit (one or more), references the requirements of Chapter 11A (privately funded housing).
D.8 Group S and U Occupancies (Storage and Utility)		1112B 1113B		
D.8.1 S and U occupancy facilities, buildings, and other architectural elements must comply with the general accessibility requirements of CBC Chapters 10, 11B, and 30.				
D.9 Outdoor Occupancies				
D.9.1 Parks and recreational areas must be made accessible. Consider:		1132B.2		See also 1114B.1.1 for additional requirements.

Check List P1 PRELIMINARY PLAN REVIEW FOR NEW CONSTRUCTION

		Justification or Code Citation (CCR Title 24, u.o.n. *Fed. Codes in Italic*	Location of Item on Plans	Comments Notes Examples
a. 3%, but never less than 2 campsites must have an accessible path of travel to parking and sanitary facilities, if such facilities are provided for the general public. b. Beaches, picnic areas, bbq, day–use areas, vista points and similar areas must have an accessible path of travel to parking and sanitary facilities, if such facilities are provided for the general public. c. Boat docks, fishing piers, etc., must have an accessible path of travel to parking and sanitary facilities, if such facilities are provided for the general public. d. Trails, paths and nature walk areas, or portions of these, must be constructed with gradients, which will permit at least partial use by wheelchair occupants. e. Nature trails and similar educational and informational areas must be accessible to the blind by the provision of rope guidelines, raised Arabic numerals and symbols for identification, information signs, and related guide and assistance devices. f. Sanitary facilities, if provided, at each public use area that is accessible to wheelchair occupants by automobile, walks or other paths of travel must be accessible. g. Parking, if provided, must have accessible parking spaces and aisles per Table 11B-6.				
D.9.2 At permanent highway rest areas at least one kind of each functional area or facility must be made accessible and be on an accessible path of travel. Consider: a. A sanitary facility for each sex. b. At least one picnic table and one additional table for each 20 tables, or fraction thereof provided. c. Accessible parking per Table 11B-6.		1132B.3		See also 1114B.1.1 for additional requirements.

E. GENERAL ACCESSIBILITY REQUIREMENTS

E.1 Bathing and Toilet Facilities

1115B

E.1.1 Where toilet facilities are provided for the public, clients, or employees, incl. separate sex single or multi-accommodation, or unisex, all facilities must be made accessible and be on an accessible path of travel, unless they are specifically exempted.

1115B.2

E.1.2 Where bathing facilities are provided for the public, clients, or employees, incl. showers, bathtubs, or lockers, at least one such facility, and not less than 1 % of all facilities, must be made accessible and be on an accessible path of travel, unless they are specifically exempted.

1115B.6

E.1.3 Accessible showers should be 3-sided and 30”x60” with a clear space of 36”x60” along the opening of the shower. Lips or thresholds are not allowed.

1115B.6.2.1
ADAAG: 4.21

E.1.4 Locker rooms for public, clients, employees, members or participants must be accessible. Consider:

1115B.6.2.1

a. 1 %, but at least one locker must be made accessible and be on an accessible path of travel that is 36” min. wide.
b. Front and side approach to accessible locker.
c. Clear 60” diameter or T-shaped turning space.

E.1.5 Accessible toilet facilities should be provided within 200 ft distance from any primary function area.

1115B.7

E.1.6 If toilet rooms are entered through vestibules, lounges, or other architectural elements that serve as privacy partitions, a clear path of travel of 48” width (44” min. req.) should be provided. Consider:

a. Avoid doors in sequence (e.g. vestibules).
b. Limit number of doors.
c. Out-swinging doors are preferred.

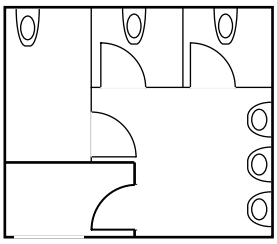

Recommended

One out-swinging door in combination with 90 degree turn. provides privacy

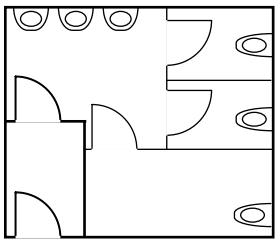

Not Recommended

In-swinging doors can trap people more easily.

© 2003 DSA/OUD

E.1.7 If a facility or a portion of a facility is equipped with an air pressurization system (e.g. in high-rise buildings) the design must ensure that compliant door opening forces are met. Consider:

1133B.2.5

a. Automatic or power assisted doors.
b. Sliding doors.
c. In-and-out swinging doors.
d. No doors at all.

E.1.8 Stall doors of accessible compartments must provide strike edge clearance on the pull side depending on the approach (see general door requirements of this checklist), but never less that 18”.

ADAAG: 4.17.5, Fig. 25

E.1.9 Front entry stall doors of accessible compartments must swing out and be located in front of the clear space (next to the water closet), with a stile width of 4” max.

ADAAG: Fig. 30(a)

E.1.10 Side entry stall doors of accessible compartments must swing-out, provide a 34” clear opening, and there must be a 60”x60” clear space directly in front of the water closet,

1115B.7.1.3
ADAAG: Fig. 30(a) & (b)

or:

side entry stall doors of accessible compartments can swing in, if the clear opening is 34”, the stall is 60”: wide, and the length of a stall with a floor-mounted WC is 97” min., or 94” min. when a wall-mounted WC is installed.

ADAAG: Fig. 30(a-1)

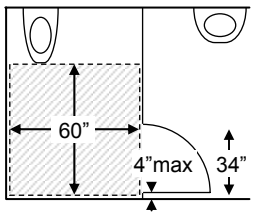

Out-swinging door and 60” square directly in front of water closet.
(All dims are min. u.o.n.)

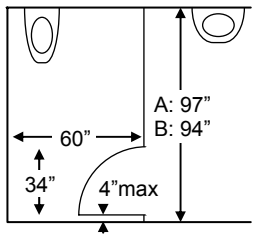

In-swinging door.
A: Floor-mounted WC
B: Wall-mounted WC
(All dims are min. u.o.n.)

E.1.11 In multi-accommodation toilet rooms, a clear space measured from the floor to a height of 27” AFF, within the sanitary facility room, and either 60” in diameter or 56”x63”, must be provided. Doors other than the door to the accessible water closet compartment in any position may encroach into this space by not more than 12”.

1115B.7.1.1

E.1.12 In multi-accommodation toilet rooms, no door can swing into the floor space required for any fixture.

1115B.7.1.2

E.1.13 Where more than 5 stalls are provided within a multi-accommodation toilet room, at least one fully accessible stall,

1115B.7.1.5

and at least one additional stall 36” wide and 60” min. long with an out-swinging door must be provided.				
E.1.14 In single-accommodation toilet rooms, there must be sufficient space for a wheelchair (30”x48”) to enter the room and permit the door to close. There must a clear floor space of 60” min. in diameter, or a T–shaped turning space.		1115B.7.2		
E.1.15 In single-accommodation toilet rooms, there must be a clear space of 28” min. between the WC and any other fixture.		1115B.7.2		
E.1.16 A clear floor space of 30”x48” must be provided in front of each lavatory. This space can extend a max. of 19” under the lavatory.		1115B.9.1		
E.2 Elevators and Special Access (Wheelchair) Lifts				
E.2.1 Elevators, if provided, must be accessible and be on an accessible path of travel. Consider:		1116B.1 Chapter 30 *ADAAG: Fig.22*		
a. Elevator door width 36” min.				
b. Inside dimensions of elevators with center-opening doors must be 80”x54” min. between walls or between wall and door, excluding return panels.				
c. Inside dimensions of elevators with side-slide opening doors must be 68”x54” min. between walls or between wall and door, excluding return panels.				
d. Not less than 51” from wall to return panel.				
e. Landings must be 60”x60” min.		1116B.2.4.1		
f. Location of elevator must coincide with other vertical means of transportation (stairs, escalators, ramps).				
E.2.2 Wheelchair lifts, may be used in lieu of an elevator only under the following conditions:		1116B.2 *ADAAG: 4.1.3(5) 5*		
a. To provide an accessible route to a performing area in an assembly occupancy.				
b. To comply with the wheelchair viewing position line-of- sight and dispersion requirements.				
c. To provide access to incidental occupiable spaces and rooms which are not open to the general public and which house no more than five persons, including but not limited to equipment control rooms and projection booths.				
d. To provide access where existing site constraints or other constraints make use of a ramp or an elevator infeasible.				
e. To provide access to raised judges' benches, clerks' stations, speakers' platforms, jury boxes and witness stands or to depressed areas such as the well of a court.				
E.2.3 Wheelchair lifts, if provided, must be accessible and be on an accessible path of travel. Consider:				
a. Elevator door 32” min. wide and 42” min. high.				
b. Inside dimensions of platform with straight-through access must be 33”x48.				
c. Inside dimensions of platform with side access must be 42”x52”.				

		Justification or Code Citation (CCR Title 24, u.o.n. *Fed. Codes in Italic*	Location of Item on Plans	Comments Notes Examples
d. Landings must be 60”x60” min.				
E.3 Other Building Components				
E.3.1 When water fountains are provided they must be accessible and be on an accessible path of travel. Consider: a. Provide hi-low fountains at each group, on each floor. b. Fountains must be located in alcoves at least 18” deep, or otherwise positioned so as not to encroach into pedestrian ways.		1117B.1 CPC 1507.3		Drinking Fountains
E.3.2 When telephones are provided, a certain number must be accessible and be on an accessible path of travel. Consider: a. When only single units are provided on a floor, 1 or at least 50% of telephone unit(s) must be accessible. b. When only one bank is provided on a floor, 1 or at least 50% of telephone unit(s) per bank must be accessible. c. When more than one bank is provided on a floor, 1 or at least 50 % of telephone unit(s) per bank must be accessible <u>and</u> at least 1 telephone per floor must meet the requirements for a forward reach telephone.		1117B.2 Fig. 11B-4		Telephones
E.3.3 Kitchens must be accessible and all essential kitchen equipment must approachable and usable. Consider: a. Clear 30”x48” space for parallel approach at range or cooktop. b. Clear 30”x48” space for parallel or forward approach at oven, dishwasher, refrigerator/freezer, trash compactor, cigar humidor, etc. c. Clear maneuvering space in front of refrigerators or freezers must comply with the door requirements for front approach. d. A person in a wheelchair must be able to turn 180 degrees within the kitchen. e. U-shaped kitchens should have an aisle width of 60” min.		1117B.3 1112A		Kitchens
E.3.4 Swimming pools and deck areas must accessible and be on an accessible path of travel. Assisting devices (e.g. pool lift) must be provided to assist persons with disabilities in entering and exiting the pool independently (i.e. without the assistance of a second person. Play equipment must, to the maximum extent feasible, be made accessible.		1117B.4 1104B.4.3		Swimming Pools and Decks
E.3.5 When automated teller machines (ATM) are required to be accessible they must have a clear space, measuring 60”x60”, in front of them to allow forward <u>and</u> parallel approach. This space must adjoin or overlap an accessible route of travel.		1117B.7 1118B.3		Automated Teller Machines
E.3.6 Protruding objects cannot reduce the clear width of an accessible route or maneuvering space. Walks, halls, corridors, passageways, aisles, or other circulation spaces must have 80” min. clear headroom.		11121B		Protruding Objects and Headroom
E.3.7 When built–in seating, tables, or counters are provided for the public, and in general employee areas, 5 percent, but never		11122B Fig. 11B-13 *ADAAG: 4.32, Fig. 45, 5.2*		Fixed or Built–in Seating, Tables, and Counters

		Justification or Code Citation (CCR Title 24, u.o.n. *Fed. Codes in Italic*	Location of Item on Plans	Comments Notes Examples
less than one, of each type must accessible and be on an accessible path of travel. Consider: a. Knee space, 27" high, 30" wide, and 19" deep must be provided at all accessible seating spaces (Exception: Knee clearance is not required at checkout counters or service counters.) b. When food or drink is served at a counter the accessible section must be at least 60" wide. c. All accessible fixed tables and counters must be accessible by means of an access aisle at least 48" clear between parallel edges of tables or between a wall and the table edges.				
E.4 Employee Areas				
E.4.1 Employee areas must conform to all requirements of Division of the State Architect/Access Compliance in the California Building Code, Plumbing Code and Electrical Code. Areas that are used only as individual work areas must be designed and constructed so that individuals with disabilities can approach, enter, and exit the areas. (Exception: Accessibility is not required to (1) observation galleries used for security purposes; or (2) in non-occupiable spaces accessed only by ladders, catwalks, crawl spaces, very narrow passageways, or freight elevators, and frequented only by service personnel for repair purposes.)		1123B.1 *ADAAG: 4.1.1(3)*		
E.5 Parking, Passenger Drop-off and Loading Zones, Bus Stops				
E.5.1 Parking spaces required to be accessible must comply with the following: a. Accessible parking spaces and aisles must be level with surface slopes not exceeding 2% in any direction b. The aisle cannot include a built-up ramp or sloped area, and must be connected to an accessible route, which leads directly to the appropriate accessible entrance of the building. c. The parking access aisle must either blend with the accessible route or have a compliant curb ramp. d. The curb ramp opening must be located within the access aisle boundaries, not within the parking space boundaries. e. The curb ramp must have a level, 48"x48" min. top landing. f. The space(s) must be so located that persons with disabilities are not compelled to wheel or walk behind parked cars other than their own. g. Valet parking facilities must provide accessible self-parking spaces and a passenger drop-off and loading zone. h. Vertical clearance, to and from accessible parking spaces, must be 114" min.		1129B Tbl. 11B-6 *ADAAG: 4.6*		For additional parking requirements at Group I Occupancy facilities, see D.6.5 of this checklist.
E.5.2 If provided, passenger drop-off and loading zones must accessible. Consider: a. Vehicle standing spaces and access aisles must be level with surface slopes not exceeding 2% in any direction.		1131B *ADAAG: 4.6.6*		For additional drop-off/loading zone requirements at Group I Occupancy facilities, see D.6.1 of this checklist.

Check List P1 PRELIMINARY PLAN REVIEW FOR NEW CONSTRUCTION

		Justification or Code Citation (CCR Title 24, u.o.n. *Fed. Codes in Italic*	Location of Item on Plans	Comments Notes Examples
b. The access aisle, adjacent and parallel to the vehicle pull-up space, must be at least 5'x20' .				
c. If there are curbs between the access aisle and the vehicle pull-up space, then a curb ramp must be provided.				
E.5.3 If provided, bus stop pads and shelters must be accessible. Consider:		1131B.4 *ADAAG: 4.6.6*		
a. Bus pads must be 96"x60" min and have a max. slope of 2% perpendicular to the roadway .				
b. The slope of the pad parallel to the roadway should, to the extent practicable, be the same as the roadway.				
E.6 Doors, and Gates				
E.6.1 All gates, including ticket gates, must meet all applicable specifications for doors.		1133B.1.1.1.4		
E.6.2 Hinged doors must be accessible. Consider:		1133B.2.3		
a. Doors leafs must be 36" min wide and provide an unobstructed opening of 32" min. when opened 90 degrees.				
b. Revolving doors cannot be used as the required entrance.				
c. There must be an accessible door or gate, adjacent to each turnstile turnstiles and crowd control barrier.				
E.6.3 Hinged doors must provide the following maneuvering clearances and level landings:		1133B.2.4.2 Fig. 11B-26A Fig. 11B-26B *ADAAG:* *Fig 25*		NOTE: All doors in alcoves must comply with the clearances for front approach.
a. Front approach to pull side of door must have maneuvering space that extends 24" min. at exterior doors (18" min at interior doors) beyond the latch side of the door and 60" min. perpendicular to the doorway.				
b. Front approach to push side of door, equipped with closer and latch, must have maneuvering space that extends 12" min. beyond the latch side of the door and 48" min. perpendicular to the doorway.				
c. Front approach to push side of door, not equipped with latch and closer, must have maneuvering space that is the same width as door opening and extends 48" min. perpendicular to the doorway.				
d. Hinge-side approach to pull side of door must have maneuvering space that extends 36" min. beyond the latch side of the door if 60" min. is provided perpendicular to the doorway or maneuvering space that extends 42" min. beyond the latch side of the door must be provided if 54" min. is provided perpendicular to the doorway.				
e. Hinge-side approach to push side of door, not equipped with latch and closer, must have a maneuvering space of 54" min., parallel to the doorway and 42" min., perpendicular to the doorway.				
f. Hinge side approach to push side of door, equipped with latch and closer, must have maneuvering space of 54" min., parallel to the doorway, 48" min. perpendicular to the doorway.				
g. Latch-side approach to pull side of door, with closers, must have maneuvering space that extends 24" min. beyond the				

		Justification or Code Citation (CCR Title 24, u.o.n. *Fed. Codes in Italic*	Location of Item on Plans	Comments Notes Examples
latch side of the door and 54” min. perpendicular to the doorway.				
h. Latch-side approach to pull side of door, not equipped with closers, must have maneuvering space that extends 24” min. beyond the latch side of the door and 48” min. perpendicular to the doorway.				
i. Latch-side approach to push side of door, with closers, must have maneuvering space that extends 24” min. parallel to the doorway beyond the latch side of the door and 48” min. perpendicular to the doorway.				
j. Latch-side approach to push side of door, not equipped with closers, must have maneuvering space that extends 24” min. parallel to the doorway beyond the latch side of the door and 42” min. perpendicular to the doorway.				
E.6.4 The space between two consecutive door openings in a vestibule, serving other than a required exit stairway shall provide a minimum of 48” of clear space from any door opening into such vestibule when the door is positioned at an angle of 90 degrees from its closed position. Doors in a series shall swing either in the same direction or away from the space between the doors.		1133B.2.4.4		
E.6.5 If a facility or a portion of a facility is equipped with an air pressurization system the design must ensure that compliant door opening forces are met at ALL doors, including those that lead to exit stairways. Automatic or power assisted doors.		1133B.2.5		
a. Sliding doors.				
b. In-and-out swinging doors.				
c. No doors at all.				
d. Revolving doors cannot be used as the required entrance.				
E.7 Stairs				
E.7.1 All stairs must be accessible and be on an accessible path of travel. Consider”		1133B.4		
a. 7” max. rise and 11” min. tread width.				
b. 48” min. width (60” preferred).				
c. Level landings (top, bottom, intermediate).				
d. Encroaching door swings				
e. Wall-mounted handrails.				
f. Floor-mounted hand- and guardrails.				
E.8 Ramps				
E.8.1 Preference should be given to sloped walks (<5% slope) whenever possible. If ramps are used the least possible slope must be used.		1133B.5		
E.8.2 Required ramps must be accessible and be on an accessible path of travel. Consider:				
a. 30” max. rise between landings (every 20” preferred).				
b. 48” min. width (60” preferred).				

c. Least possible slope (1:14 preferred)
d. Level landings (top, bottom, intermediate).
e. Encroaching door swings.
f. Wall-mounted handrails.
g. Floor-mounted hand- and guardrails, with applicable wheel guides as required.

E.9 Other

E.9.1 See Chapter 11C for standards applicable to card readers at gasoline fuel dispensing facilities.		Chapter 11C		

© 2003 DSA/OUD

COMMONLY USED ABBREVIATIONS

ADA	Americans wit Disabilities Act
ADAAG	ADA Accessibility Guidelines
ADACO	ADA-Coordinator
AFF	Above finished floor
ANSI	American National Standards Institute
C.T.P.	Contact third party
CA	State of California
CBC	California Building Code
CC	California Civil Code
CCR	California Code of Regulations
CEC	California Electrical Code
CFR	Federal Code of Regulation
CHBC	California Historical Building Code
cl	Center line
CPC	California Plumbing Code
D.A.	Designated accessible
Dept.	Department
DF	Drinking fountain
DGS	Department of General Services
DH	Department Head
Dims	Dimension, measurement
DOJ	U.S. Dept. of Justice
DSA	Division of the State Architect
DSA/AC	DSA Access Compliance Program
DStA	Deputy State Architect
E.F.	Equivalent facilitation
Fig.	Figure
GC	California Government Code
H&S	California Health and Safety Code
HQ	Headquarters
incl.	including
ISA	International Symbol of Accessibility
IR	Interpretation of Regulations
Lab	Laboratory
Lav	Lavatory
lbs.	Pound
lf	Linear foot
Lib	Library
MAC	DSA/AC Program Manager
max	Maximum
min	Minimum
MOD	Modernization project
MoM	Method of mitigation
MOU	Memorandum of understanding
MP	Master priority
MRR	Men's restroom
N	No
N/A	Not applicable
N.A.R.	No action required
NT	Non-typical
o.c.	On center
O/R	Official responsible
P.A.	Physical alteration
P.M.	Program modification
PTD	Paper towel dispenser
Qty	Quantity
REF	Reference
req.	Requirement
RO	DSA Regional Office
ROM	Regional Office Manager
SD	Soap dispenser
sec.	Second (1/60 minute)
Sec.	Section
sf	Square foot
StA	State Architect
tbd	To be determined
Tbl.	Table
Title 24	Title 24 of the CCR
UFAS	Uniform Federal Accessibility Standards
u.o.n.	unless otherwise noted
up	Ramp direction up
WC	Water closet
WRR	Women's restroom
Y	Yes
28 CFR 35	DOJ's Rule for ADA Title II
28 CFR 36	DOJ's Rule for ADA Title III
'	Foot
"	Inch
%	1/100
<	less than
>	more than
≤	less than or equal
≥	more than or equal

© 2003 DSA/OUD

ACCESS PLAN-REVIEW CHECKLIST

© 2003 DSA/OUD

CHECKLIST TABLE OF CONTENTS

1 General Requirements

2 Site Requirements

3 Accessible Path Of Travel

4 Accessible Parking, Passenger Loading, and Bus Stops

5 Curb Ramps and Pedestrian Crossings

6 Walks and Sidewalks

7 Accessible Ramps

8 Doors and Gates

9 Corridors, Hallways, and Vestibules

10 Stairs and Steps

11 Elevators and Areas of Rescue Assistance

12 Wheelchair Lifts

13 Public Telephones

14 Drinking Fountains

15 Sanitary Facilities

16 Alarms

17 Signage and Way-Finding

18 Assembly Use Areas

19 Business and Mercantile Use Areas

20 Educational Use Areas

21 Institutional Use Areas

22 Residential Use Areas

23 Other Use Areas

24 Qualified Historical Buildings

25 Specifications

© 2003 DSA/OUD

1	Project designer (PD) shall address the following marked or circled items, and any additional plan review comments on drawings and specifications before scheduling a back check appointment for access compliance (AC). Any questions or points of disagreement must be resolved prior to back check by fax to plan reviewer (PR).		Justification, Reference, or Code Citation (C.C.R. Title 24, u.o.n.)	Location of Item on Plan Set	Comments Notes Examples

Check List 1. GENERAL REQUIREMENTS

❑ Work may be considered for refection for any of the following reasons: (a) Excessive coordination errors (no more than ten per project). Civil, architectural, structural, mechanical, plumbing, landscaping, electrical, and specifications should be coordinated to match. (b) Excessive, incomplete dimensioned details from site plan, floor plans, and interior elevations. (c) Absence of coordinated signage schedule indicating the location and mounting height of signs. (d) Absence of accessible parking indicating dimensioned clearances, slopes, transition between material, signage, parking ratio. (e) For modernization projects, no path of travel is indicated to accessible toilets and area of new work. (f) Incomplete plan set as indicated on the index sheet. (g) Lacking application, check, plans or specifications. (h) Assembly rooms without seating plans and details. No accessible seating locations with companion seating. Non-equitable lines of sight (includes stadiums and bleachers) (i) Doors without all required clearances fully dimensioned. (j) Missing details for ramps, curb cuts, transitions, elevators, stairs, lifts, thresholds, cross slopes. (k) Absence of dimensioned restroom plans to enlarged scale 1/4” and interior elevations with fixture location and accessory mounting heights. (l) Incomplete door schedule lacking: (1) Size of doors (2) Hardware groups (3) Threshold details referenced (4) Signage coordination (details referenced and copy) (m) Assembly rooms without assistive listening devices as required with signage.		106.3.3 Title 24, Part 1, 4-317		
❑ Reviewer shall review all items related to accessibility, provided by P.D, in specifications, and in plans, including floor plans, elevations, sections, and details, to make sure all construction work is accessible.				
❑ For additional requirements, see also DSA/AC Preliminary Design Review List (roman numerals).				
❑ Projects with a total construction cost of $5 mil. or more should go through a preliminary design review with a DSA reviewer prior to plan submittal.				
❑ Reviewer shall review preliminary design meeting notes (prepared and submitted by PD.)				

© 2003 DSA/OUD

1	Project designer (PD) shall address the following marked or circled items, and any additional plan review comments on drawings and specifications before scheduling a back check appointment for access compliance (AC). Any questions or points of disagreement must be resolved prior to back check by fax to plan reviewer (PR).		Justification, Reference, or Code Citation (C.C.R. Title 24, u.o.n.)	Location of Item on Plan Set	Comments Notes Examples
	Check List 1. GENERAL REQUIREMENTS				
	General Plan Reviewer Notes				
G1.	Provide the following for this element or area: **1.** Enlarged plans **2.** Sections **3.** Elevations **4.** Details				
G2.	Coordinate element(s) in architectural, structural, mechanical, plumbing, or electrical drawings (plans, sections, elevations, or details) with the one shown in this area.				
G3.	Provide missing sheet, section, elevation, or detail as indicated on plan.				
G4.	Coordinate element(s) with specifications.				
G5.	Indicate scale on drawing.				
G6.	Provide missing dimension(s).				
G7.	Update old code citation with current one.				
G8.	Recommendation (federal requirement).				
G9.	Recommendation (best practice approach).				
G10.	Typical (applies to all similar situations in this project).				
G11.	Provide absolute dimensions, not a range, in construction documents.				
G12.	Provide enlarged plan or detail, showing all relevant dimensions to clearly indicate how accessibility requirements are met.		106.3.3 Title 24, Part 1, 4-317		
G13.	Delete the term “handicap” and/or “H/C”. Recommend: use “ACC” for accessible or “D.A.” for disabled access(ibility) instead.				See Appendix B to 28 CFR 35 and CA Vehicle Code §22511.9
G14.	The code provides a range for this dimension. It is recommended that, unless there are compelling reasons not to do so, a dimension in the middle of the range should be chosen, to provide the contractor with a safety buffer for construction tolerances (Note: construction tolerances cannot be applied to justify overstepping code required minima and maxima).				
G15.	Identified work, element, furniture, equipment, or layout, even though labeled NIC or provided by the owner, is integral to access compliance of this submittal. Specify dimensions and locations of work or element.				
G16.	Identified work or element encroaches into required clear space (30”x48”), or into turning radius (60” diameter), or into maneuvering space at door.				
G17.	See note on the sheet/drawing indicated in red.				
G18.	In new construction and alteration projects, full compliance must be provided. (If unreasonable hardship is given PD to		Part 2, Chapter 2 Section 222 *Unreasonable Hardship*		

© 2003 DSA/OUD

		Justification, Reference, or Code Citation (C.C.R. Title 24, u.o.n.)	Location of Item on Plan Set	Comments Notes Examples
Check List 1. GENERAL REQUIREMENTS				
submit written application (see DSA IR #99-05 for form) to DSA and provide equivalent facilitation.)				
G19. Bring manufacturer cut-sheets or product sample of specified element to back check.				
General Requirements				
1.1 State and federal rules require, as do the statutes, that newly constructed facilities be readily accessible to and usable by individuals with disabilities. The phrase "readily accessible to and usable by individuals with disabilities" is a term that, in slightly varied formulations, has been used in the Architectural Barriers Act of 1968, the Fair Housing Act, the regulations implementing section 504 of the Rehabilitation Act of 1973, California's Government Code, and current accessibility standards. It means, with respect to a facility or a portion of a facility, that it can be approached, entered, and used by individuals with disabilities (including mobility, sensory, and cognitive impairments) <u>easily and conveniently</u>. A facility that is constructed to meet the requirements of the rules' accessibility standards will be considered readily accessible and usable with respect to construction. To the extent that a particular type or element of a facility is not specifically addressed by the standards, the language of this section is the safest guide		Appendix B of 28 CFR 36 CA Gov. Code §4450		
1.2 Show list of all current codes, regulations, and adopted standards, which apply for the project:				
Applicable State Codes as of November 1, 2002				
❑ 2001 Building Standards Administrative Code, Part 1, Title 24 C.C.R.				
❑ 2001 California Building Code (CBC), Part 2, Title 24 C.C.R. (1997 UBC, Volumes 1-3 & 2001 California Amendments)				
❑ 2001 California Electrical Code (CEC), Part 3, Title 24 C.C.R. (1996 National Electrical Code & 2001 California Amendments)				
❑ 2001 California Mechanical Code (CMC), Part 4, Title 24 C.C.R. (1997 Uniform Mechanical Code & 2001 California Amendments)				
❑ 2001 California Plumbing Code (CPC), Part 5, Title 24 C.C.R. (1997 Uniform Plumbing Code & 2001 California Amendments)				
❑ 1998 California Elevator Code, Part 7, Title 24 C.C.R.				
❑ 2001 California Fire Code, Part 9, Title 24 C.C.R. (1997 Uniform Fire Code & 2001 California Amendments)				
❑ 2001 California Referenced Standards, Part 12, Title 24 C.C.R.				
❑ 1990 Title 19 C.C.R., Public Safety, State Fire Marshal Regulations				
Partial List of Applicable State Standards				
❑ NFPA 13, Automatic Sprinkler Systems, 1996 Edition				
❑ NFPA 72, National Fire Alarm Code (CA Amended) 1996 Edition (Note see UL Standard 1971 for "Visual Devices")				
❑ Reference code section for NFPA Standards-CBC (SFM) 3504.1				
❑ ASME A17.1-1993 for Section 7-3094 Part 7, C.C.R. Title 24				
❑ ASME A18.1-1999 for Section 7-3094 Part 7, C.C.R. Title 24				
❑ ASTM F 1487-98 for Playground Surface Systems Under and Around Playground Equipment				

1	Project designer (PD) shall address the following marked or circled items, and any additional plan review comments on drawings and specifications before scheduling a back check appointment for access compliance (AC). Any questions or points of disagreement must be resolved prior to back check by fax to plan reviewer (PR).		Justification, Reference, or Code Citation (C.C.R. Title 24, u.o.n.)	Location of Item on Plan Set	Comments Notes Examples
	Check List 1. GENERAL REQUIREMENTS				
	❑ ASTM F 1292-99 for Impact Attenuation of Surface Systems Under and Around Playground Equipment ❑ ANSI/BHMA A156.10-1985 American National Standard for Power Operated Pedestrian Doors ❑ ANSI A156.19-1984 American National Standard for Power Assist and Low Energy Power Operated Doors				
	List of Federal Codes and Standards (if applicable) ❑ Americans with Disabilities Act (ADA), Title II or Title III ❑ For Title II: Uniform Federal Accessibility Standards (UFAS) or Americans with Disabilities Act Accessibility Guidelines for Buildings and Facilities (ADAAG). ❑ For Title III: ADA Standards for Accessible Design				Choose appropriate federal standards as follows: Title II for projects funded or used by state and local government services. Title III for public accommodations and in commercial facilities.
1.3	Provide list of code analysis data: construction type, areas sf., occupancy classification, occupancy load, and fire sprinklers, if applies.			Cover sheet	
1.4	Describe the scope of work covered under this application. Identify the area, category, and type of project.			Cover sheet	**Categories of projects** ○ New construction ○ Alteration w/o state funds ○ Alteration w/ state funds ○ Additions ○ Relocatables ○ HDC relocatables ○ ADA-barrier removal ○ Fire damage projects ○ Historical properties ○ MOU projects ○ Housing ○ Class size reduction ○ Others
1.5	In order to clarify the scope of work, describe the relationship of this application with previous or upcoming projects at the same site and provide DSA application numbers for all buildings, paths of travel, parking, passenger loading zones, sanitary facilities, drinking fountains, signage, and public telephones on this site (e.g., increments, phases, ADA Transition Plan efforts, etc).			Cover sheet	
1.6	Due to the difficulty of anticipating every unsatisfactory condition that might exist in connection with the existing facility where alteration work is proposed, the following clause or one of similar meaning must be included in the specifications or in the general notes: *The intent of the drawings and specifications is to modify the facility for accessibility in accordance with Title 24, California Code of Regulations. Should any conditions develop not covered by the contract documents such that the finished work will not comply with said Title 24, California Code of Regulations, a change order detailing and specifying the required work shall be submitted to and approved by DSA-AC before proceeding with the work.*				
1.7	Indicate whether the facility is a qualified historical building and provide details showing whether the alteration is using alternatives in compliance with California State Historical Building Code (see Checklist 24).		1135B.1		
1.8	Stamp or license of design professional is missing or expired. Renew and stamp plans for back check.				
1.9	For new construction projects: provide full accessibility to all areas of facilities or portions of facilities, including exterior paths of travel, and all floors, including split levels, platforms, podiums, sunken areas, balconies, roof gardens, and		1103B 1127B		

© 2003 DSA/OUD

Check List 1. GENERAL REQUIREMENTS

		Justification, Reference, or Code Citation (C.C.R. Title 24, u.o.n.)	Location of Item on Plan Set	Comments Notes Examples
	mezzanines. Modify scoping of the project accordingly and indicate clearly on drawings how this requirement is being met. EXCEPTIONS: a. Floors or portions of floors not customarily occupied, including, but not limited to, non-occupiable or employee spaces accessed only by ladders, catwalks, crawl spaces, very narrow passageways or freight (non-passenger) elevators, and frequented only by service personnel for repair or maintenance purposes: such spaces as elevator pits and elevator penthouses, piping and equipment catwalks and machinery rooms. Stair stripping shall be required on stairs. b. For project under DSA jurisdiction only: if DSA/AC determines unreasonable hardship during the preliminary design meeting of the project.	1103B.1.2 1127B.1.1		28 CFR 35.130(b)(4) A public entity may not, in determining the site or location of a facility, make selections – (i) That have the effect of excluding individuals with disabilities from, denying them the benefits of, or otherwise subjecting them to discrimination; or (ii) That have the purpose or effect of defeating or substantially impairing the accomplishment of the objectives of the service, program, or activity with respect to individuals with disabilities.
1.10	For alteration, renovation, structural repair, or addition projects: provide full accessibility within the specific area of alteration. All proposed work must comply fully with the requirements for new construction (see **Item 1.9,** incl. exceptions). Modify scoping of the project accordingly and indicate clearly on drawings how this requirement is being met.	1134B.2		
1.11	In alteration, renovation, structural repair, or addition projects, the following elements, serving the specific area of alteration must be made accessible: **1.** A primary entrance to the building, facility, or exterior area which is being altered. **2.** A primary path of travel to the specific area of alteration, including: a path of travel from the site entry point (at the public right-of-way) that is closest to public transportation stops; a path of travel from on-site transportation stops; designated accessible parking; a path of travel from designated accessible parking; and identifying and directional signage. **3.** Sanitary facilities serving the area. **4.** Drinking fountains serving the area. **5.** Signage. **6.** Public telephones serving the area. **7.** Recommendation: Surrounding site (as required for accessible egress routes) and exterior activity areas serving the area (such as play grounds). Modify scoping of the project accordingly and indicate clearly on drawings how this requirement for is met. EXCEPTIONS: **a. Alteration Projects below the Cost Cap:** When the total construction cost of alterations is less than $97,575.63 (in **2003**), and DSA finds that full compliance	1134B.2.1 1134B.2.1.1		ALTERATION is any change, addition, or modification in construction or occupancy (that affects or could affect the usability of a facility.) ADDITION is an extension or increase in floor area or height of a building or structure

		Justification, Reference, or Code Citation (C.C.R. Title 24, u.o.n.)	Location of Item on Plan Set	Comments Notes Examples
Check List 1. GENERAL REQUIREMENTS				
creates an unreasonable hardship and equivalent facilitation is provided, compliance can be limited to the actual alteration work.				
An unreasonable hardship exists where the cost of providing an accessible entrance, path of travel, sanitary facilities, public phones and drinking fountains, exceeds 20% of the cost of the project without these features. In such a case, access must be provided to the extent that it can be without incurring disproportionate cost (i.e. up to 20%).				
Modify scoping of the project accordingly and indicate clearly on drawings how this requirement for is met. Provide cost documentation.				
When scoping the project, priority should be given to those elements that will provide the greatest access in the following order: 1.1 An accessible entrance; 1.2 An accessible route to the altered area; 1.3 At least one accessible restroom of each type for each sex. 1.4 Accessible telephones; 1.5 Accessible drinking fountains; 1.6 Additional accessible elements.				
b. ADA Barrier Removal Projects		1134B.2.1.3		This exception does not apply to facilities for which the first certificate of occupancy was issued after January 26, 1993
Alterations that are limited to the removal of architectural barriers are not subject to the accessibility requirements in 1134B.2.1. This exception (1134B.2.1.3) is not intended to relieve projects from complying with all applicable provisions within the specific area of alteration.				
c. Other Alteration Projects		1134B.2.1.4		
Alteration projects that are not wholly or in part funded by the State, and which consist only of heating, ventilation, air conditioning; re-roofing; electrical work not involving placement of switches and receptacles; cosmetic work that does not affect items regulated by Title 24 (i.e. painting, carpeting), etc. are not considered alterations for the purpose of accessibility and are not subject to the accessibility requirements in 1134B.2.1.				
This exception (1134B.2.1.4) is not intended to relieve projects from complying with other applicable provisions of the CBC (e.g., replacement of carpet does not activate the provisions of this section; however, the new carpet still must comply with Section 1124B.3.)				
Provide information related to applicable accessibility requirements for all planned elements and features in the specific area of alteration.				

Project designer (PD) shall address the following marked or circled items, and any additional plan review comments on drawings and specifications before scheduling a back check appointment for access compliance (AC). Any questions or points of disagreement must be resolved prior to back check by fax to plan reviewer (PR).

		Justification, Reference, or Code Citation (C.C.R. Title 24, u.o.n.)	Location of Item on Plan Set	Comments Notes Examples
Check List 1. GENERAL REQUIREMENTS				
d. Alteration Projects with Department of Education (CDE) or Office of Public School Construction (OPSC) Funding Alteration projects that are wholly or in part funded by CDE or OPSC, and which consist only of heating, ventilation, air conditioning; re-roofing; electrical work not involving placement of switches and receptacles; cosmetic work that does not affect items regulated by Title 24 (i.e. painting, carpeting), etc. are not considered alterations for the purpose of accessibility and are not subject to the accessibility requirements in 1134B.2.1. However, OPSC makes an additional 3% of funding available for Fire-Life-Safety and Access beyond the building envelope, plus provides an allocation for required elevators. Modify scoping of the project accordingly and indicate clearly on drawings how this requirement is being met. Provide cost documentation.		1134B.2.1.4		
e. Replacement-in-kind Maintenance Work Projects limited to replacement-in-kind work do not "trigger" a total upgrade in the area of work or in the path of travel. However, individual items being replaced must be selected according to applicable standards for that item only, i.e., replaced water closets, 17 – 19 inches high with code compliant flush handles, would not "trigger" repositioning the fixture location or moving the partition walls.		DSA Memo 10-24-2001 (on file)		
1.12 Special requirements for school modernization projects: **1.** Before submitting project to DSA-AC, PD should review it in the preliminary phase with the California Department of Education (Tel: 916-322-2470), to ensure that site selection is acceptable. **2.** Provide information related to the project consistent with the ADA Transition Plan for the facilities. **3.** If elevators are required by DSA in writing at preliminary phase, partial funding for elevator can be granted by OPSC, in addition to the basic funding package.				
1.13 Provide the following note in projects that include deferred approval items for access related equipment or elements "Installation of deferred approval items shall not be started until contractor's drawings, specifications and engineering calculations for the actual systems to be in installed have been accepted and signed by the Architect or Structural Engineer and approved by DSA."				
1.14 Charter schools must submit plans to DSA for approval.		101.17.11.4.1		

© 2003 DSA/OUD

2	Project designer (PD) shall address the following marked or circled items, and any additional plan review comments on drawings and specifications before scheduling a back check appointment for access compliance (AC). Any questions or points of disagreement must be resolved prior to back check by fax to plan reviewer (PR).		Justification, Reference, or Code Citation (C.C.R. Title 24, u.o.n.)	Location of Item on Plan Set	Comments Notes Examples
	Check List 2. SITE REQUIREMENTS				
2.1	For site selection, site development, and other scoping requirements see also applicable **DSA/AC Preliminary Review Checklists.**				
2.2	Exterior Site Development Issues. Consider the following excerpt from the ADAAG Appendix when developing the site plan (A4.3.1 Accessible Route): **1.** Travel Distances. Many people with mobility impairments can move at only very slow speeds; for many, traveling 200 ft could take about 2 minutes. This assumes a rate of about 1.5 ft/s/ on level ground. It also assumes that the traveler would move continuously. However, on trips over 100 ft, disabled people are apt to rest frequently, which substantially increases their trip times. Resting periods of 2 minutes for every 100 ft can be used to estimate travel times for people with severely limited stamina. In inclement weather, slow progress and resting can greatly increase a disabled person's exposure to the elements. **2.** Sites. Level, indirect routes or those with running slopes lower than 1:20 can sometimes provide more convenience than direct routes with maximum allowable slopes or with ramps		ADAAG A 4.3.1 GC 4450		
2.3	New construction: All proposed site work, including choice of location, site development and grading, must be designed to provide access to all new building entrances and exterior ground–floor exits, and access to normal paths of travel, and where necessary to provide access, shall incorporate pedestrian ramps, curb ramps, etc. When more than one building or facility is located on a site, accessible routes of travel shall be provided between buildings and accessible site facilities. The accessible route of travel shall be the most practical direct route between accessible building entrances, accessible site facilities and the accessible entrance to the site. Where more than one route of travel is provided, all routes shall be accessible. EXCEPTION: a. Where DSA/AC determines that compliance with this requirement would create an unreasonable hardship because of topography, natural barriers, etc., an exception may be granted when equivalent facilitation is provided through the use of other methods and materials.		1127B.1 1114B.1.2 28 CFR 35.130(b)(4)		
2.4	Alterations and additions: All proposed work must comply fully with the requirements for new construction (see *Item 2.3*). EXCEPTION: a. Where DSA/AC determines that compliance with this requirement would create an unreasonable hardship because of topography, natural barriers, etc., an exception may be granted when equivalent facilitation is provided through the use of other methods and materials.		1127B.1 1114B.1 101.1711.4 28 CFR 35.130(b)(4)		

© 2003 DSA/OUD

Project designer (PD) shall address the following marked or circled items, and any additional plan review comments on drawings and specifications before scheduling a back check appointment for access compliance (AC). Any questions or points of disagreement must be resolved prior to back check by fax to plan reviewer (PR).

Check List 2. SITE REQUIREMENTS

		Justification, Reference, or Code Citation (C.C.R. Title 24, u.o.n.)	Location of Item on Plan Set	Comments Notes Examples
	b. The requirements do not apply in those conditions where, due to legal or physical constraints, the site of the project would not allow compliance with this requirement or equivalent facilitation without creating an unreasonable hardship. NOTE: Jurisdictional findings and determinations are subject to an internal DSA appeals process.			
2.5	The site is an important part of a building or facility, and PD must ensure that buildings or facilities can be approached and entered easily and conveniently. Modify site plan to meet the following requirements:			Recommendation: Provide a separate accessibility site plan.
	1. Use larger scale to more clearly show relevant elements.			
	2. Change graphic layout and/or line weights and types to better represent access compliance.			
	3. Provide names and/or designations for all existing buildings.			
	4. Provide and indicate DSA application numbers for all existing buildings affected by project scope. Alterations are not permitted to previously uncertified construction.			NOTE: Call DSA's Regional Office Supervisor for certification process of existing buildings without DSA application number.
	5. Clearly indicate any non "Field Act" structures on the site; they must be noted as "Not Part of Structural Review." However, structures may still be part of Access Compliance review.	DSA IR #95-01		
2.6	Indicate the following infrastructure on site plan:			
	1. Location of all toilet rooms on site.	1115B.7		
	A. Identify all toilets which are part of this project.			
	B. Identify all toilets that are scheduled to be made accessible in the near future (e.g., second project phase or increment, Transition Plan implementation, etc.) and indicate planned year of completion.			
	C. Identify all existing toilet rooms.			
	D. Identify type of use (men's, women's, or unisex; single or multi accommodation; employees, public, students, kindergarten, or visitors).			
	E. Provide DSA application # for existing toilet rooms that were previously upgraded (Note: application #s 61,000 or higher typically comply with current code. Application #s 60,999 and lower or no application # must be upgraded to current standards if part of the POT).			
	2. Location of all on-site and associated off-site parking and passenger drop-off zones.	1129B 1131B		
	A. Provide parking ratio for all parking indicating number of regular, accessible, van-accessible, and total. Calculate each lot separately.			
	B. Identify type of use (regular, accessible, or van-accessible; employees, public, or visitors).			

© 2003 DSA/OUD

2	Project designer (PD) shall address the following marked or circled items, and any additional plan review comments on drawings and specifications before scheduling a back check appointment for access compliance (AC). Any questions or points of disagreement must be resolved prior to back check by fax to plan reviewer (PR).		Justification, Reference, or Code Citation (C.C.R. Title 24, u.o.n.)	Location of Item on Plan Set	Comments Notes Examples
Check List 2.	**SITE REQUIREMENTS**				
	C. Identify all accessible parking spaces and passenger drop-off zones which are part of this project.				
	D. Identify all parking spaces and passenger drop-off zones that are scheduled to be made accessible in the near future (e.g., second project phase or increment, Transition Plan implementation, etc.) and indicate planned year of completion.				
	E. Indicate 5' wide access aisles adjacent to each accessible parking stall and 8' wide access aisles on the passenger side of all van accessible parking stalls.				
	F. Indicate location of "Tow-away" signs and specify detail.				
	G. Indicate location of accessible parking stall signage and specify detail.				
3.	Location of all drinking fountains on site.		1117B.1		
	A. Identify all drinking fountains which are part of this project. Provide hi-low units in alcoves.				
	B. Identify all drinking fountains that are scheduled to be made accessible in the near future (e.g., second project phase or increment, Transition Plan implementation, etc.) and indicate planned year of completion.				
	C. Identify all existing drinking fountains.				
	D. Identify type of use (single, multi, or hi-low unit; adult or children's height).				
	E. Provide DSA application # for existing drinking fountains that were previously upgraded (Note: application #s 44,000 or higher typically comply with current code. Application #s 43,999 and lower or no application # must be upgraded to current standards if part of the POT).				
4.	Location of all public telephones.		1117B.2		
	A. Identify all public telephones which are part of this project.				
	B. Identify all public telephones that are scheduled to be made accessible in the near future (e.g., second project phase or increment, Transition Plan implementation, etc.) and indicate planned year of completion.				
	C. Identify all existing public telephones and indicate compliance status.				
5.	Location of all ramps.		1133B.5		
	A. Identify type of ramp (exterior, interior, covered ramp; curb ramp, built-up curb ramp).				
	B. Identify all ramps which are part of this project.				
	C. Identify all ramps that are scheduled to be made accessible in the near future (e.g., second project phase or increment, Transition Plan implementation, etc.) and indicate planned year of completion.				

© 2003 DSA/OUD

Project designer (PD) shall address the following marked or circled items, and any additional plan review comments on drawings and specifications before scheduling a back check appointment for access compliance (AC). Any questions or points of disagreement must be resolved prior to back check by fax to plan reviewer (PR).

	Justification, Reference, or Code Citation (C.C.R. Title 24, u.o.n.)	Location of Item on Plan Set	Comments Notes Examples

Check List 2. SITE REQUIREMENTS

D. Identify all existing ramps and indicate length, landings and slope.

E. Indicate any slopes in the POT that exceed 1:20 (5%) with an arrow, starting at the top of the ramp run and ending at the bottom of the ramp run.

F. Provide DSA application # for all ramps that were previously upgraded.

6. Location of all stairs. — 1133B.4

A. Identify type of stairs (exterior, interior, covered stairs).

B. Identify all stairs which are part of this project.

C. Identify all stairs that are scheduled to be made accessible in the near future (e.g., second project phase or increment, Transition Plan implementation, etc.) and indicate planned year of completion.

D. Identify all existing stairs and provide DSA application # for all stairs that were previously upgraded.

E. Indicate stairs or steps with arrow and label with direction. Specify details where applicable.

7. Location of all elevators and lifts. — 1116B

A. Identify type.

B. Identify all elevators or lifts which are part of this project.

C. Identify all elevators or lifts that are scheduled to be made accessible in the near future (e.g., second project phase or increment, Transition Plan implementation, etc.) and indicate planned year of completion.

D. Identify all existing elevators or lifts and indicate compliance status with current codes.

E. Provide DSA application # for all elevators or lifts that were previously upgraded.

2.7 Clearly delineate all accessible paths of travel (POT) by dashed or dotted line (▪ ▪ ▪ ▪) on site plans. See *Checklist 3* for additional POT requirements.

2.8 Provide the following notes on site plan:

- Accessible path of travel as indicated on plan is a barrier free access route without any abrupt level changes exceeding ½" beveled at 1:2 max. slope, or vertical level changes not exceeding ¼" max. and at least 48" wide. Surface is slip resistant, stable, firm, and smooth. Cross slope does not exceed 2% and slope in the direction of travel is less than 5% unless otherwise indicated.
- Contractor to verify that all barriers in the path of travel have been removed or will be removed under this project, and path of travel complies with CBC 1133B.

2.9 Coordinate civil and architectural drawings.

© 2003 DSA/OUD

2	Project designer (PD) shall address the following marked or circled items, and any additional plan review comments on drawings and specifications before scheduling a back check appointment for access compliance (AC). Any questions or points of disagreement must be resolved prior to back check by fax to plan reviewer (PR).		Justification, Reference, or Code Citation (C.C.R. Title 24, u.o.n.)	Location of Item on Plan Set	Comments Notes Examples

Check List 2. SITE REQUIREMENTS

2.10	Provide relevant spot elevations along the POT on site plan. At a minimum show elevations at: **1.** Interior finished floor of buildings. **2.** Exterior entrance door landings. **3.** Along sloped walks in intervals of 100 ft max. (on POT). **4.** Site entry points. **5.** Ramp landings (top, bottom, intermediate). **6.** Curb ramps (top, bottom). **7.** Elevator landings. **8.** Accessible parking and passenger drop-off zones. **9.** Drinking fountains. **10.** Exterior counters				
2.11	Specify all surface materials (existing and new) along and adjacent to the POT. Separate different surface areas by lines.				
2.12	Identify all level changes between materials which exceed ¼" vertical or ½" (if beveled at 1:2) in height along and adjacent the POT.		1133B.7.1		
2.13	Indicate all ground floor entry/exits that are required to be accessible. 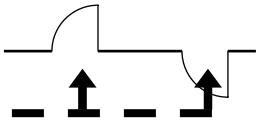				
2.14	Indicate all existing and proposed curb cuts or curb ramps that are in the POT. If new, specify details. If existing, indicate conditions (slope, width, landings) to show compliance status. 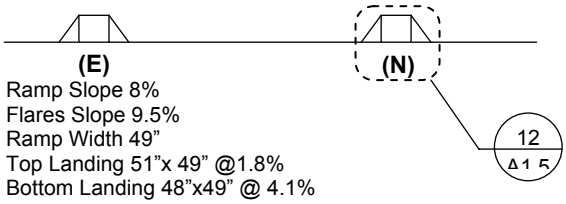 Ramp Slope 8% Flares Slope 9.5% Ramp Width 49" Top Landing 51"x 49" @1.8% Bottom Landing 48"x49" @ 4.1%				
2.15	Indicate warning curbs and tactile/visual indicators and specify detail.		1133B.8		
2.16	Where gates occur within the POT, gap between ground surface and bottom of swing gate cannot exceed 3". Indicate how gate will be used: Specify lever hardware and smooth surface at bottom 10" of gate (e.g. kick plate)		1133B.1.1.1.4		
	1. If gate is used as exit only, comply with exit door requirements (panic hardware and exit signs may be required to coordinate with Fire & Life Safety).		1003.3.2.1		

© 2003 DSA/OUD

2	Project designer (PD) shall address the following marked or circled items, and any additional plan review comments on drawings and specifications before scheduling a back check appointment for access compliance (AC). Any questions or points of disagreement must be resolved prior to back check by fax to plan reviewer (PR).		Justification, Reference, or Code Citation (C.C.R. Title 24, u.o.n.)	Location of Item on Plan Set	Comments Notes Examples
	Check List 2. SITE REQUIREMENTS				
	2. If gate is used as entrance and exit, comply with exit door and general door requirements (panic hardware and exit signs may be required to coordinate with Fire & Life Safety). Specify door schedule number and detail (landings, hardware, kick-plate, strike edge clearance, clear opening). Provide lever hardware or provide sign on or adjacent to gate stating “GATE IS TO REMAIN LOCKED IN THE OPEN POSITION DURING REGULAR BUSINESS HOURS AND DURING ANY OTHER PUBLIC FUNCTION”. Characters shall be in 1” capital letters.		1133B.1.1.1.4		
2.17	Indicate location of all exterior directional signs and specify detail.		1127B.3		
2.18	Provide enlarged plan of area or element in 1/4" scale.				

© 2003 DSA/OUD

3	Project designer (PD) shall address the following marked or circled items, and any additional plan review comments on drawings and specifications before scheduling a back check appointment for access compliance (AC). Any questions or points of disagreement must be resolved prior to back check by fax to plan reviewer (PR).		Justification, Reference, or Code Citation (C.C.R. Title 24, u.o.n.)	Location of Item on Plans	Comments Notes Examples
	Check List 3. ACCESSIBLE PATH OR TRAVEL				
3.1	For additional scoping requirements and exceptions see also applicable **DSA/AC Preliminary Review Checklists, Checklist 1** and **Checklist 2**.				
3.2	The accessible path of travel (POT) must, to the maximum extent feasible, coincide with the route for the general public.		1114B.1.2		
3.3	Indicate POT (dashed or dotted line) from and to the following areas (if necessary, modify scoping of the project accordingly and indicate clearly on drawings how this requirement is met):				
	1. From public transportation stops and cross walks in the public rights-of-way serving the area adjacent to a site entry point.		217-P CA Streets & Highways Code §5610		NOTE: The PD must clearly demonstrate and document an effort in requesting that the entity having authority (or control) over the public right-of-way (such as a city or a county) provide the necessary improvements / alterations needed to comply with accessibility. If such request is denied by the entity having authority (or control) over the public right-of-way, that denial must be documented and entered into the DSA project file.
	2. From all appropriate site entry points that serve pedestrians (e.g., public transportation stops, cross walks, etc.) to the area of new construction or alteration, starting at the property line.				
	3. From accessible parking serving the area to the area of new construction or alteration.				
	4. From passenger drop-off zones to the area of new construction or alteration.				
	5. From visitor arrival or sign-in points to the area of new construction or alteration.				
	6. From accessible restrooms serving the area to the area of new construction or alteration.				
	7. From drinking fountains serving the area to the area of new construction or alteration.				
	8. From public telephones serving the area to the area of new construction or alteration.				
	9. From and to elevators serving the site's POT.				
	10. From exterior activity areas serving the area (e.g., plazas, playgrounds, vista points, etc.) to the area of new construction or alteration.				
	11. From all other essential function areas serving the area to the area of new construction or alteration.				
	12. Between all areas of new construction or alteration.				
3.4	Indicate width of POT at this location:				
	1. 48" min for sidewalks and walks (60" preferred or if occupancy load is > 300). See **Checklist 6** for exceptions and additional requirements.		1133B.7.1		
	2. 48" min for curb ramps (60" preferred). See **Checklist 5** for exceptions and additional requirements.		1127B.5.2		
	3. 48" min for ramps, or 60" min if serving an occupancy load of >300). See **Checklist 7** for exceptions and additional requirements.		1133B.5.2.2		

© 2003 DSA/OUD

3	Project designer (PD) shall address the following marked or circled items, and any additional plan review comments on drawings and specifications before scheduling a back check appointment for access compliance (AC). Any questions or points of disagreement must be resolved prior to back check by fax to plan reviewer (PR).		Justification, Reference, or Code Citation (C.C.R. Title 24, u.o.n.)	Location of Item on Plans	Comments Notes Examples

Check List 3. ACCESSIBLE PATH OR TRAVEL

	4. 36” for corridors and hallways if serving an occupancy load of <10, or 44” min (60” preferred). See **Checklist 9** for exceptions and additional requirements .		1133B.3.1		
	5. 44” min within a multi accommodation toilet room from and to accessible compartments.		1115B.7.1.4		
	6. 36” min within a single accommodation toilet room, from and to doors, fixtures and controls.		1115B.7.2		
	7. 36” min at aisles serving cross aisles on one side only.		1133B.6.2		NOTE: Chapter 10 may require 44” aisle width in B and M occupancies, and in assembly occupancies without fixed seats, where seats, tables, furnishings, displays and similar fixtures or equipment are placed on both sides of the aisle.
	8. 44” min at aisles serving cross aisles on both sides.				
	9. 36” min at aisles in A (without fixed seating), B, and M occupancies if seats, tables, furnishings, displays and similar fixtures or equipment are placed on only one side of the aisle.		1004.3.2.2.2		
	10. 44” min at aisles in A (without fixed seating), B, and M occupancies if seats, tables, furnishings, displays and similar fixtures or equipment are placed on both sides of the aisle.		1004.3.2.2.2		
3.5	Door (in any position) reduces required width of corridor or hallway more than 50%. Modify design.		1004.3.3.2 1004.3.4.2		
3.6	Provide and indicate the following dimensions when the POT changes direction or turns around an obstruction:		11B-5E		
	1. 90 degree turns can be made from a 36” wide passage into another 36” passage if the depth of the obstruction is >48” on the inside dimensions of the turn.				
	2. U-turns around an obstruction less than 48” wide can be made if the passage width is 42” min. and the base of the U-turn space is 48” min. wide.				
					NOTE: If occupancy load is 10 or more, the minimum width of all *dimensions must be increased to 44” min.

Check List 3. ACCESSIBLE PATH OR TRAVEL

		Justification, Reference, or Code Citation (C.C.R. Title 24, u.o.n.)	Location of Item on Plans	Comments Notes Examples
	EXCEPTION: a. Top, bottom and intermediate landings of ramps. b. At doors.			
3.7	Provide and indicate the following properties for the POT: **1.** POT and adjacent areas must be so designed that water will not accumulate on walking surfaces. **2.** POT surface must be slip-resistant, stable, and firm. **3.** POT must be smooth and vibration free (cobble stones, rough pavers, wood boards, etc should not be used).	1133B.7.1 1124B.1		
3.8	All entrances and ground floor exits must be accessible. EXCEPTION: a. Exterior ground–floor exits serving smoke–proof enclosures, stairwells and exit doors servicing stairs only. b. Exits in excess of those required by Section 1114B.2.1, and which are more than 24 inches above grade. Such doors shall have visual sign which indicates, by means of an arrow and/or text, the location of the nearest accessible exit. The warning sign shall comply with Section 1117B.5 and be mounted at a location so steps do not need to be retraced. c. In existing buildings where the enforcing agency determines that compliance with the building standards of this section would create an unreasonable hardship, an exception shall be granted when equivalent facilitation is provided. Equivalent facilitation would require at least one entrance to be accessible to and usable by persons with disabilities. d. In existing buildings when legal or physical constraints will not allow compliance or equivalent facilitation without creating an unreasonable hardship.	1133B.1.1.1.1		NOTE: Jurisdictional findings and determinations are subject to an internal DSA appeals process.
3.9	Indicate on plans all entrances and ground floor exits that are required to be accessible (either by extending the POT line into the building or by a symbol (e.g., ►). Provide strike edge and landing dimensions for each entrance on plan or provide the following general note on plan: • All exterior entrances and exits identified with a triangular symbol (►) on this plan are accessible and comply with CBC 1133B.1.1, including – 32” clear opening; – Required strike edge clearance at pull side of door (24” for front and latch, 36” for hinge approach); – Level landings (2% slope max on exterior side, 0.0% on interior side); – Accessible threshold, hardware, closer, kick-plate; – ISA sign on exterior side of entrance.			

3	Project designer (PD) shall address the following marked or circled items, and any additional plan review comments on drawings and specifications before scheduling a back check appointment for access compliance (AC). Any questions or points of disagreement must be resolved prior to back check by fax to plan reviewer (PR).		Justification, Reference, or Code Citation (C.C.R. Title 24, u.o.n.)	Location of Item on Plans	Comments Notes Examples

Check List 3. ACCESSIBLE PATH OR TRAVEL

3.10	Vertical change in POT cannot exceed 1/4”. Provide curb ramp, ramp, elevator, platform lift, or remove element at this location, or provide equally convenient, alternative POT.		1124B.2		
3.11	Level change in POT between 1/4” and 1/2" must be beveled at 1:2 max. slope. Provide curb ramp, ramp, elevator, platform lift, or remove element at this location, or provide equally convenient, alternative POT.		1124B.2 1133B.7.4		
	EXCEPTION: a. At the bottom of a curb ramp, serving a pedestrian crossing, the 1/2” lip must be beveled at 1:1 slope (45˚). b. Where DSA determines unreasonable hardship, existing thresholds 3/4" high or less, may remain if they have (or are modified to have) a beveled edge, sloped at 1:2.		ADAAG 4.1.6(3)(d)(ii)		NOTE: Thresholds in excess of 3/4" must be mitigated by means of a ramp or slopes walk.
3.12	Level change in between pedestrian area and adjacent surface exceeds 30” in height. Specify and provide detail for guardrail (42” AFF).				
3.13	Indicate condition of level change in between pedestrian area and adjacent surface. If drop exceeds 1/4” in height specify and provide one of the following details: **1.** Abrupt vertical drops between 1/4" and 4”. **2.** 6” high warning curb if vertical drop exceeds 4” within 24” of the edge or the pedestrian way. EXCEPTION: a. Between a walk or sidewalk and a street or driveway. b. If adjacent grade is higher than pedestrian way. c. If cane detectable handrails, guardrails, or wheel-guides are provided.				
3.14	Grating should not be located in the POT.		1133B.7.2		
	EXCEPTION: a. In alteration projects, when DSA finds unreasonable hardship and when equivalent facilitation is provided. b. Where, due to legal or physical constraints, the site of the project will not allow compliance with this requirement or				NOTE: Jurisdictional findings and determinations are subject to an internal DSA appeals process.

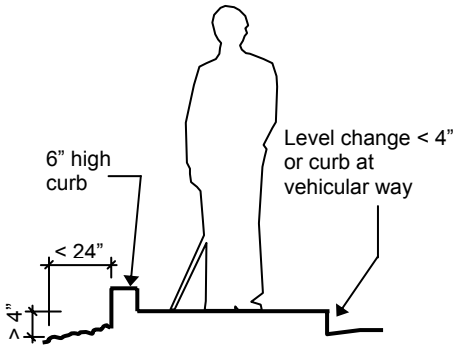

		Justification, Reference, or Code Citation (C.C.R. Title 24, u.o.n.)	Location of Item on Plans	Comments Notes Examples

Check List 3. ACCESSIBLE PATH OR TRAVEL

equivalent facilitation without creating an unreasonable hardship.

3.15 Identify location of all gratings within the POT and provide cut sheet of gratings for back check review. Grate openings cannot exceed 1/2" in direction of traffic flow. Alternate direction of grate openings in plazas, courts, and other wide pedestrian areas. — 1133B.7.2

3.16 Provide detail for expansion joints, control joints, score marks, etc, if they occur in the POT. Indicate width to be 1/2" max and filling to be a firm, compressible, elastic material that is substantially level with the surface of the POT.

3.17 Wall mounted object with bottom edge between 27" and 80" above the ground protrudes more than 4" into pedestrian circulation area. — 1133B.8.6

1. Provide cane detectable rails.
2. Provide detectable warning surface.
3. Remove, relocate or modify protruding object.

3.18 Post or pylon mounted object with bottom edge between 27" and 80" above the ground protrudes more than 12" into pedestrian circulation area. — 1133B.8.6

1. Provide cane detectable rails or detectable warning surface.
2. Remove, relocate or modify protruding object (4" max protrusion preferred).

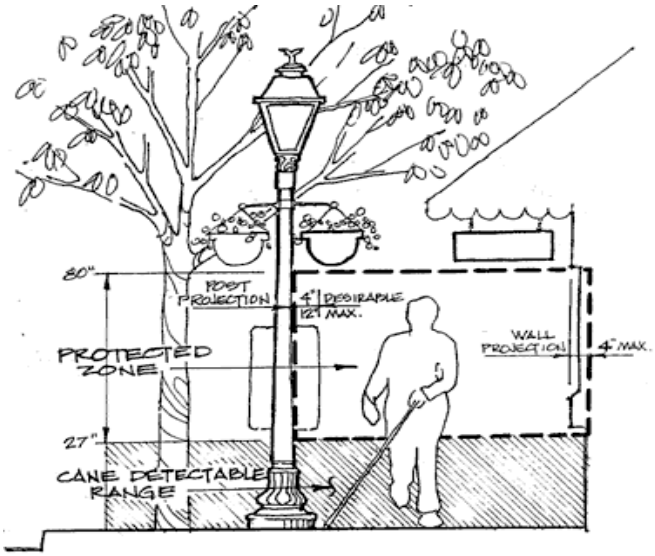

3.19 Section of handrail extension cannot be detected:

1. Provide detectable rail section (e.g. by providing a rail at 6" AFF.)

Project designer (PD) shall address the following marked or circled items, and any additional plan review comments on drawings and specifications before scheduling a back check appointment for access compliance (AC). Any questions or points of disagreement must be resolved prior to back check by fax to plan reviewer (PR).

	Justification, Reference, or Code Citation (C.C.R. Title 24, u.o.n.)	Location of Item on Plans	Comments Notes Examples

Check List 3. ACCESSIBLE PATH OR TRAVEL

2. Modify stair design.

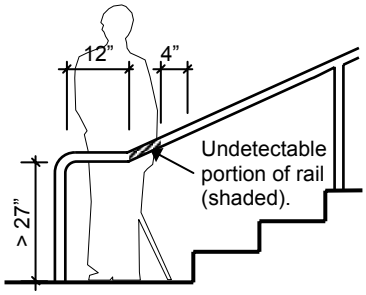

Not Compliant

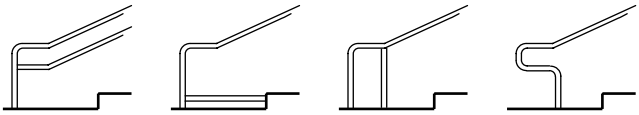

Compliant Designs

3.20	POT cannot extend behind parked vehicles, other than their own.	1129B.4.3
3.21	For large site and complicated accessible path of travel, provide directional signs, indicating the direction to accessible parking, building, or outside facilities. Sign should be designed to facilitate reading by persons with partially impaired vision. Background contrast and character proportion is critical.	1117B.5
3.22	Provide detectable warnings at transit boarding platform.	1133B.8.3
3.23	Provide detectable directional (truncated bars) texture at transit boarding platform.	1133B.8.4 Fig. 11B-23B
3.24	Provide detectable warnings at hazardous vehicular areas.	1133B.8.5

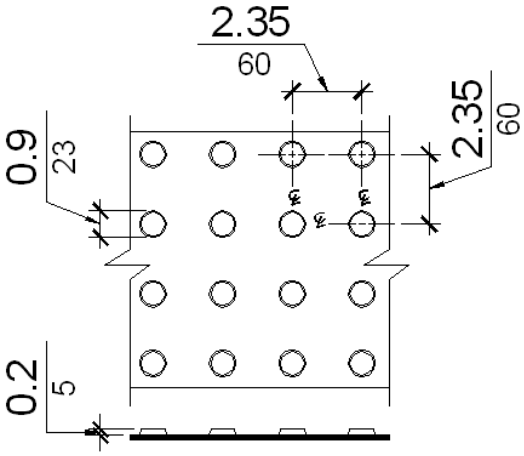

Detectable Warning Detail (In-Line Truncated Domes)

© 2003 DSA/OUD

4	Project designer (PD) shall address the following marked or circled items, and any additional plan review comments on drawings and specifications before scheduling a back check appointment for access compliance (AC). Any questions or points of disagreement must be resolved prior to back check by fax to plan reviewer (PR).		Justification, Reference, or Code Citation (C.C.R. Title 24, u.o.n.)	Location of Item on Plans	Comments Notes Examples

Check List 4. ACCESSIBLE PARKING, PASSENGER LOADING, AND BUS STOPS

4.1 For additional scoping requirements and exceptions see also applicable **DSA/AC Preliminary Review Checklists** and **Checklist 1.**

ACCESSIBLE PARKING — 1129B

4.2 Indicate location and layout of all accessible parking on site plan and connect dashed POT to access aisle.

4.3 Provide separate parking ratio for each parking lot on this site. Indicate name of lot, total number of stalls, van accessible stalls, and regular accessible stalls.

4.4 Provide enlarged plan in 1/4" scale representing the actual layout, including associated sidewalks, curb ramps, and location of water drains, for all accessible parking under this contract. — Title 24, Part 1, 4-317

4.5 Provide the following number of required accessible parking spaces at this lot (calculate each lot separately): — TABLE 11B-6

Total Parking in Lot	Required Accessible	Including Van Accessible
1-25 spaces	1 space(s)	1
26-50	2	1
51-75	3	1
76-100	4	1
101-150	5	1
151-200	6	1
201-300	7	1
301-400	8	1
401-500	9	2
501-1,000	Two % of total	(1 in 8)
1,001 and over	Twenty plus one for each 100, or fraction thereof over 1,001	

EXCEPTION:

a. Provide 10% of the total number of parking spaces at outpatient units and facilities. — 1129B.3
b. Provide 20% of the total number of parking spaces at units and facilities that specialize in treatment or services for persons with mobility impairments.

4.6 One (1) of every eight (8) accessible spaces is required to be van accessible but not less than one.

4.7 Provide accessible electrical vehicle charging station. — DSA IR #97-03

4.8 Consider relocating accessible parking. Accessible parking spaces must be located on the shortest accessible route of travel from adjacent parking to an accessible entrance. Note that required stalls need not be provided in the particular lot. They may be provided in a different location if equivalent or — 1129B.1

Project designer (PD) shall address the following marked or circled items, and any additional plan review comments on drawings and specifications before scheduling a back check appointment for access compliance (AC). Any questions or points of disagreement must be resolved prior to back check by fax to plan reviewer (PR).

Check List 4. ACCESSIBLE PARKING, PASSENGER LOADING, AND BUS STOPS

		Justification, Reference, or Code Citation (C.C.R. Title 24, u.o.n.)	Location of Item on Plans	Comments Notes Examples
	greater accessibility, in terms of distance from an accessible entrance, user cost and convenience is ensured.			
4.9	Where parking lots serve accessible entrances of several buildings or different areas on site, accessible parking spaces must be dispersed and located closest to the POT.			
4.10	Rearrange parking layout so that persons with disabilities are not compelled to wheel or walk behind parked cars other than their own.			
4.11	Provided typical parking detail is not similar to actual parking layout. Modify.			
4.12	Parking stalls and aisles: provide and indicate the following dimensions and elements on plans:	1129B.4		
	1. 8' wide access aisles on the passenger side of each van accessible parking stall.			
	2. 5' wide access aisles adjacent to each accessible parking stall.			
	3. 18' long parking stalls and access aisles.			
	4. 2% max slope in any direction at stalls and aisles.			
	5. A 36" square International Symbol Accessibility on pavement at rear of stall.			
	6. Diagonal stripes in the access aisle, 3" wide, in blue or white, at 36" o.c.			
	7. Post or wall mounted accessible parking stall signs:	1129B.5		
	A. Signs must be located at the interior end of the accessible stall, with the bottom at 80" min AFF.			
	B. Signs must be reflectorized, 70 square inch min, with a white ISA on blue background.			
	C. Van stalls must have additional language stating "Van Accessible" below the ISA.			
	8. "Tow-away" signs	1129B.5		
	A. Post in a conspicuous place at each entrance to off–street parking lot, or immediately adjacent to and visible from each designated stall.			
	B. Sign must be 17" x 22" min., with letters 1" in height min.			
	C. Sign must state: "Unauthorized vehicles parked in designated accessible spaces not displaying distinguishing placards or license plates issued for persons with disabilities may be towed away at owner's expense. Towed vehicles may be reclaimed at _ _ _ _ _ or by telephoning _ _ _ _ _."			
	D. PD to provide contact info on plans.			

© 2003 DSA/OUD

Project designer (PD) shall address the following marked or circled items, and any additional plan review comments on drawings and specifications before scheduling a back check appointment for access compliance (AC). Any questions or points of disagreement must be resolved prior to back check by fax to plan reviewer (PR).

Check List 4. ACCESSIBLE PARKING, PASSENGER LOADING, AND BUS STOPS

		Justification, Reference, or Code Citation (C.C.R. Title 24, u.o.n.)	Location of Item on Plans	Comments Notes Examples
	9. All parking wheel stops, 24” from curb, if walkway is less than 6’ wide. Recommendation: when provided, wheel stops should be a contrasting color to surrounding surface. 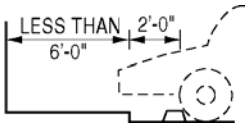			
	10. Provide the words “NO PARKING” in each access aisle, painted in 12” high letters.	1129B.4.1&2		
4.13	Curb ramps with slopes greater than 2% cannot be within the 18’ long access aisle. Provide curb cut instead of built-up curb ramp or redesign parking layout (see Fig. 4-B).	ADAAG 4.6.3		
4.14	POT to parking: provide and indicate the following dimensions and elements on plans:	See figures at the end of this Checklist		
	1. The access aisle must either be level with the accessible route or have a curb ramp. Provide spot elevations.			
	2. Curb ramp opening must be located within the access aisle boundaries, not within the parking space boundaries.			
	3. 48”x48” min level top landing at curb ramp.			
	4. Omit 1/2" lip and truncated domes at ramp if used to access parking aisle only.			
	5. In new construction: provide depressed curb ramp (case ‘C’) if walkway is less than 11’-11” (see also **Checklist 5**).			
4.15	Provide and indicate 98” min (8’-2”) vertical clearance at vehicle routes to and from van accessible parking stalls.			
4.16	At parking areas controlled by ticket dispensers provide accessible parking spaces for persons with disabilities outside the controlled area so that these inaccessible dispensers do not create an architectural barrier.	DSA IR #97-06		
PARKING STRUCTURES				
4.17	Provide accessible parking stalls with a 98” min (8’-2”) vertical clear vehicle way to and from these accessible parking stalls.	1130B ADAAG 4.6.5		
	EXCEPTION:			
	a. Where DSA determines that compliance with the height requirement would create an unreasonable hardship, an exception may be granted when equivalent facilitation is provided.			
	b. In existing buildings where DSA determines that, due to legal or physical constraints, compliance with the height requirement or equivalent facilitation would create an unreasonable hardship.			NOTE: Jurisdictional findings and determinations for exception (b) are subject to an internal DSA appeals process.

 © 2003 DSA/OUD

4	Project designer (PD) shall address the following marked or circled items, and any additional plan review comments on drawings and specifications before scheduling a back check appointment for access compliance (AC). Any questions or points of disagreement must be resolved prior to back check by fax to plan reviewer (PR).		Justification, Reference, or Code Citation (C.C.R. Title 24, u.o.n.)	Location of Item on Plans	Comments Notes Examples

Check List 4. ACCESSIBLE PARKING, PASSENGER LOADING, AND BUS STOPS

4.18	In multi-story parking structures, provide van accessible stalls on the following levels: **1.** All floor levels that have accessible walks or ramps leading to the exterior. **2.** All floor levels that have accessible walks (incl. skywalks) or ramps leading to adjacent buildings. **3.** All floor levels that have additional benefits or amenities, such as electrical charging stations, better security, scenic views, or other public accommodations such as shops, telephones, smoking areas, long-term parking, etc.				
4.19	Provide sign at all vehicle entrances indicating 98” min (8’-2”) vertical clearance to and from accessible parking stalls.				
4.20	Locate accessible parking closest to elevator or ramp.				
PASSENGER LOADING					
4.21	Provision of valet parking does not eliminate any of the requirements for accessible parking (i.e. provide all features to allow self parking)		1131B.3		
4.22	Indicate type, location, and layout of all passenger drop-off and loading zones on site plan.				
4.23	Where provided, passenger drop-off and loading zones must be made accessible at this site and connect dashed POT to area.				
4.24	Provide enlarged plan in 1/4” scale representing the actual layout, including associated sidewalks and curb ramps, for all accessible passenger loading under this contract. Provide and indicate: **1.** 5’x20’ (8’x20’ preferred) access aisle adjacent and parallel to the vehicle pull–up space. **2.** Access aisle and vehicle pull–up space must be level (2% max in any direction). **3.** A curb ramp, if there is a curb between the access aisle and the vehicle pull–up space, or if there is a curb between the access aisle and the POT. **4.** Vertical clearance of 114” min at one vehicle access route to such zones (from site entrances and exits). **5.** Design of identifying signage should be different than that used at accessible parking spaces (e.g., by providing a post-mounted sign with the ISA and stating “Passenger Loading Only – No Parking”).		1131B.2.1		
4.25	Where valet parking is provided, provide accessible passenger drop off zone.				

© 2003 DSA/OUD

4	Project designer (PD) shall address the following marked or circled items, and any additional plan review comments on drawings and specifications before scheduling a back check appointment for access compliance (AC). Any questions or points of disagreement must be resolved prior to back check by fax to plan reviewer (PR).		Justification, Reference, or Code Citation (C.C.R. Title 24, u.o.n.)	Location of Item on Plans	Comments Notes Examples

Check List 4. ACCESSIBLE PARKING, PASSENGER LOADING, AND BUS STOPS

BUS STOPS					
4.26	Provide accessible bus stop and pad.		1131B.4		
4.27	Indicate location and layout of all accessible bus stops on site plan and connect dashed POT to bus stop pad.				
4.28	Provide and indicate an 8’ long by 5’ wide (8’ preferred) bus stop pad (8’ measured perpendicular to curb and 5’. measured parallel to curb).		ADAAG 10.1.2(1)		
4.29	In new construction: provide a square curb surface between the pad and road or other detectable warning (provide detail).				
4.30	The slope of the pad perpendicular to the roadway must be less than 2%.				
4.31	The slope of the pad parallel to the roadway must be the same as the roadway.				
4.32	Provide 30”x48” clear wheelchair space within bus stop shelter and connect space to bus stop pad and POT.				

© 2003 DSA/OUD

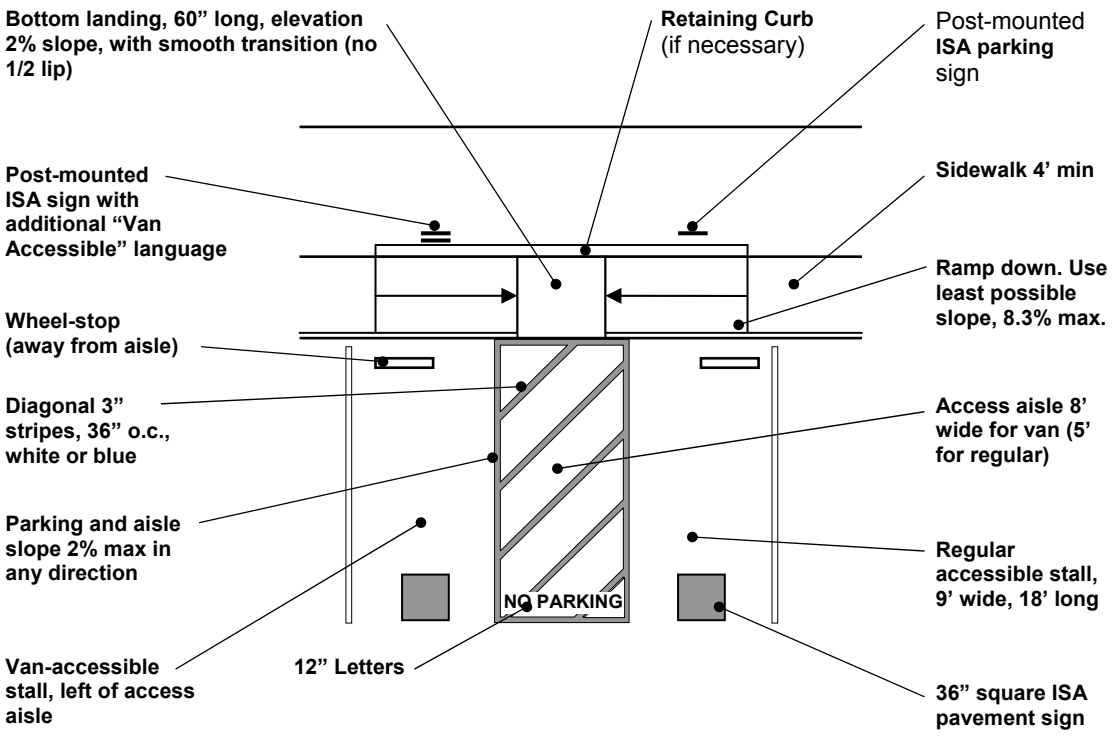

Fig 4-A. Depressed Curb Ramp at Accessible Parking (Typical)

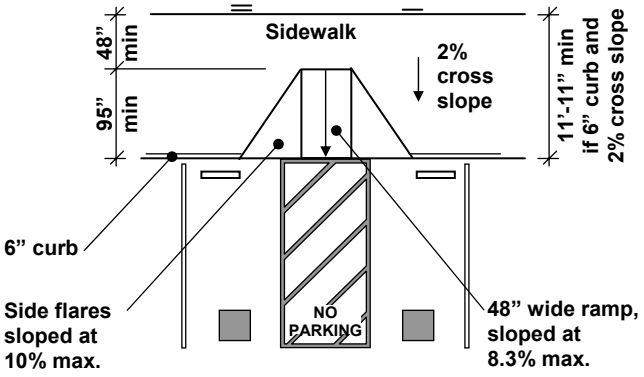

Fig 4-B. Curb Cut at Accessible Parking

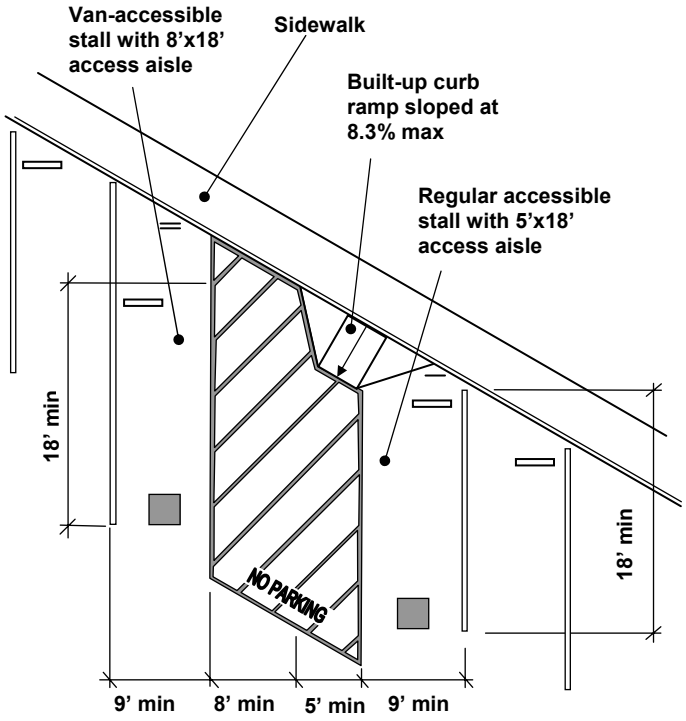

Note that neither built-up curb ramp, nor sidewalk protrude into the required, perpendicular 18’x17’ van space, or the 18’x14’ regular space.

Fig 4-C. Built-up Curb Ramp at Accessible Angled Parking

5	Project designer (PD) shall address the following marked or circled items, and any additional plan review comments on drawings and specifications before scheduling a back check appointment for access compliance (AC). Any questions or points of disagreement must be resolved prior to back check by fax to plan reviewer (PR).		Justification, Reference, or Code Citation (C.C.R. Title 24, u.o.n.)	Location of Item on Plans	Comments Notes Examples

Check List 5. CURB RAMPS AND PEDESTRIAN CROSSINGS

5.1	For additional scoping requirements and exceptions see also applicable **DSA/AC Preliminary Review Checklists** and **Checklist 1.**				CURB RAMP is a sloping pedestrian way, intended for pedestrian traffic, which provides access between a walk or sidewalk to a surface located above or below an adjacent curb face.
CURB RAMPS					
5.2	Indicate location and layout of all curb ramps on site plan.				
5.3	Provide and indicate curb ramp at this location.		1127B.5.1		CURB CUT is an interruption of a curb at a pedestrian way, which separates surfaces that are substantially at the same elevation.
5.4	Provided typical curb ramp detail is not similar to actual layout. Modify to provide dimensioned detail in 1/4” scale representing the actual layout, including associated sidewalks, for all accessible curb ramps under this contract.				
5.5	Curb ramps cannot project into vehicular traffic lanes or into the 18’ long access aisle of accessible parking spaces.				
5.6	Indicate 48” min width (60” preferred) exclusive of side flares.		1127B.5.2		
5.7	Provide spot elevations at top and bottom of curb ramp and at relevant spots on sidewalk.				

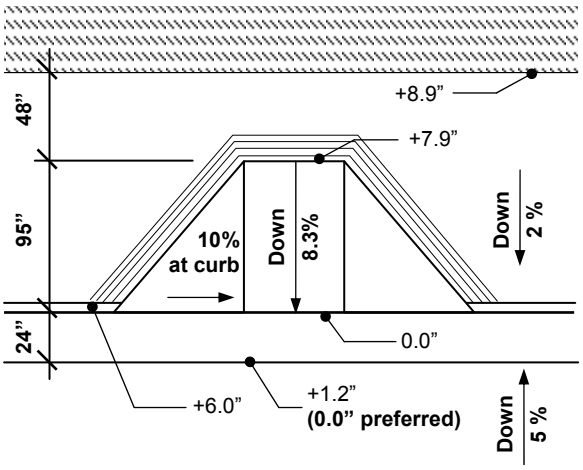

Sample of Typical Curb Ramp Elevations

5.8	Indicate curb ramp slope. Use least possible slope but never more than 8.3% max.		1133B.5.1 ADAAG 4.7.2		
5.9	If lengthening of curb ramp run is technically feasible at this location, decrease slope to the least possible.				
5.10	Indicate side flare slope (10% max., or 8.3% max. if top landing is less than 48”.)				
5.11	Indicate counter slope of adjoining gutters or road surface at the bottom of and immediately adjacent to the curb ramp (5% max. for 48” in the direction of travel.)				

© 2003 DSA/OUD

Project designer (PD) shall address the following marked or circled items, and any additional plan review comments on drawings and specifications before scheduling a back check appointment for access compliance (AC). Any questions or points of disagreement must be resolved prior to back check by fax to plan reviewer (PR).

	Justification, Reference, or Code Citation (C.C.R. Title 24, u.o.n.)	Location of Item on Plans	Comments Notes Examples

Check List 5. CURB RAMPS AND PEDESTRIAN CROSSINGS

5.12 Recommendation: Provide a 24" wide level area at the bottom of the ramp, if the algebraic difference of ramp and counter slopes is greater than 11%.

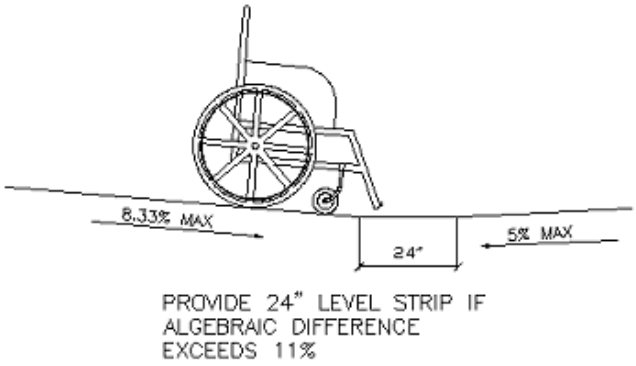

5.13 Provide and indicate detectable warning surface (i.e. in-line truncated domes) at regular curb ramp if slope is between 0.0% and 6.7%. Domes must extend the full width and length of the curb ramp, excluding the flares.

1127B.5.8
ADAAG 4.7.7

NOTE:
As of July 26, 2001, ADAAG requires the provision of truncated domes on all curb ramps, regardless of slope. Compliance with this requirement rests with the Project Designer.

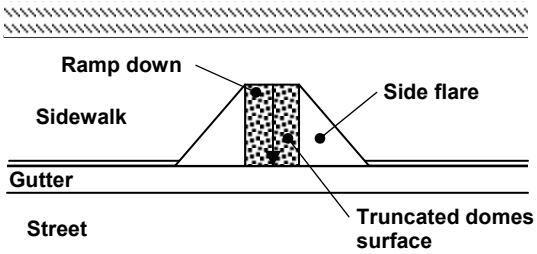

Regular Curb Ramp

EXCEPTION:

a. No domes are required in cases where curb ramps do not serve crosswalks and where domes would mislead persons with vision impairments or guide dogs (e.g., at curb ramps serving accessible parking spaces.)

© 2003 DSA/OUD

Project designer (PD) shall address the following marked or circled items, and any additional plan review comments on drawings and specifications before scheduling a back check appointment for access compliance (AC). Any questions or points of disagreement must be resolved prior to back check by fax to plan reviewer (PR).

	Justification, Reference, or Code Citation (C.C.R. Title 24, u.o.n.)	Location of Item on Plans	Comments Notes Examples

Check List 5. CURB RAMPS AND PEDESTRIAN CROSSINGS

5.14 Provide and indicate detectable warning surface (i.e. in-line truncated domes) at depressed and combination curb ramp if slope is between 0.0% and 6.7%. Provide 24” wide band of truncated domes between pedestrian area and vehicular way.

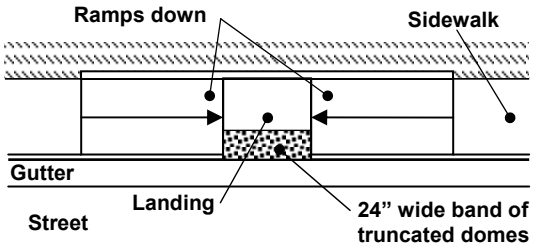

Depressed Curb Ramp

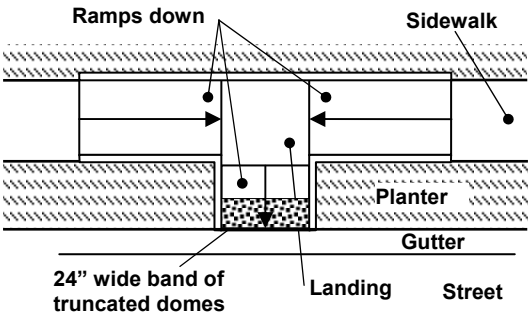

Combination Curb Ramp

5.15 Recommendation: Provide raised truncated domes in an in-line pattern, rather than an off-set pattern.

5.16 Recommendation: Provide stamped or formed concrete dome surface, rather than glue-down rubber mats.

5.17 In new construction, and if rubber mats are used, recess material to be flush with surrounding surfaces (either to top of base material or to top of dome as shown.)

© 2003 DSA/OUD

Project designer (PD) shall address the following marked or circled items, and any additional plan review comments on drawings and specifications before scheduling a back check appointment for access compliance (AC). Any questions or points of disagreement must be resolved prior to back check by fax to plan reviewer (PR).

Check List 5. CURB RAMPS AND PEDESTRIAN CROSSINGS

		Justification, Reference, or Code Citation (C.C.R. Title 24, u.o.n.)	Location of Item on Plans	Comments Notes Examples
	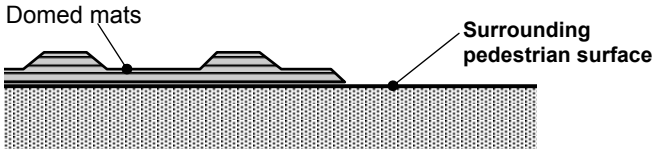 **Not Recommended**			
	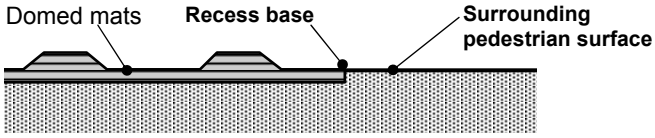 **Recommended (at exterior locations)**			
	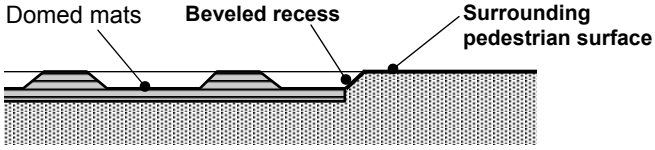 **Recommended (at enclosed locations)**			
5.18	Indicate how truncated dome surface contrasts visually with adjoining surfaces. Use either a light-on-dark, or dark-on-light contrast.			NOTE: Fully-recessed domed mat should be protected from any standing water, snow or potential ice buildup.
5.19	*Pending: Detectable warning material should have UL certification (Underwriters Laboratories Inc.).*			
5.20	Provide dimension on plan, indicating that the 48” landing at the bottom of the curb ramp is fully contained within marked crossings.	1127B.5.10 ADAAG 4.7.9		
5.21	Revise layout to provide 48” long level top landing or slope flares at 8.3% max.			
5.22	Curb ramp reduces POT on sidewalk to less than 48” width. Consider using depressed or combination curb ramp.			NOTE: The length of a cub ramp (sloped 8.3%) at a regular sidewalk with 2% cross slope and a 6” curb is 95”.
5.23	Provide and indicate 1/2" lip (beveled 45°) at bottom of curb ramp.			
	EXCEPTION:			
	a. No lip is required in cases where curb ramps do not serve crosswalks and where the lip would mislead persons with vision impairments or guide dogs (e.g., at curb ramps serving accessible parking spaces.)			
	b. Projects under DSA jurisdiction and that are federally funded may omit the lip if the slope exceeds 6.7% (1:15) or if a 24” wide band of truncated domes (in-line pattern) is installed at the bottom of the ramp.	DSA IR #97-05		
	c. No lip is required when truncated domes are provided instead.			

© 2003 DSA/OUD

Project designer (PD) shall address the following marked or circled items, and any additional plan review comments on drawings and specifications before scheduling a back check appointment for access compliance (AC). Any questions or points of disagreement must be resolved prior to back check by fax to plan reviewer (PR).

	Justification, Reference, or Code Citation (C.C.R. Title 24, u.o.n.)	Location of Item on Plans	Comments Notes Examples

Check List 5. CURB RAMPS AND PEDESTRIAN CROSSINGS

5.24 Provide 12” wide grooved border around upper edges of curb ramp and flares to indicate transition from sidewalk to curb ramp.

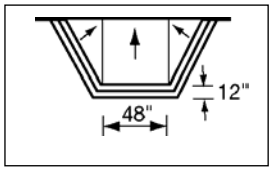

5.25 Provide 12” wide grooved border as part of level walkway, not as part of sloped curb ramp and flares. Modify detail.

5.26 Indicate how curb ramp and flare surfaces contrast with adjoining surfaces. DSA will accept the following methods:

- Provide heavy broom brush, perpendicular to ramp run, and provide a 33% min. light-dark contrast to adjacent sidewalks, gutter or street surfaces by coloring the concrete of the new curb ramp either dark gray or light gray. Or,
- Provide truncated domes surface on curb ramp, with a 33% light-dark contrast to adjacent sidewalks, gutter or street surfaces (Note: truncated domes should not be used on curb ramps serving solely parking aisles.

5.27 Provide and indicate 60” min. wide bottom or intermediate landing at depressed or combination curb ramp if sidewalk/ramp is less than 72” wide.

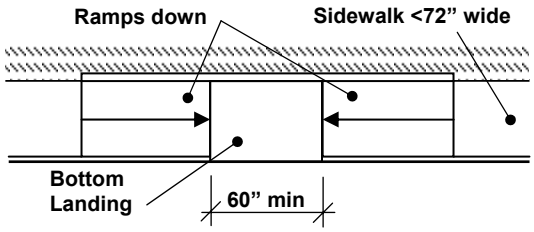

Depressed Curb Ramp

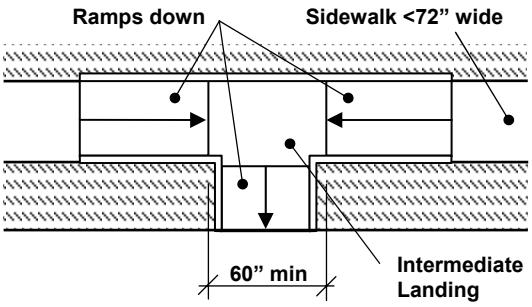

Combination Curb Ramp

© 2003 DSA/OUD

Project designer (PD) shall address the following marked or circled items, and any additional plan review comments on drawings and specifications before scheduling a back check appointment for access compliance (AC). Any questions or points of disagreement must be resolved prior to back check by fax to plan reviewer (PR).

	Justification, Reference, or Code Citation (C.C.R. Title 24, u.o.n.)	Location of Item on Plans	Comments Notes Examples

Check List 5. CURB RAMPS AND PEDESTRIAN CROSSINGS

PEDESTRIAN CROSSINGS

5.28 Recommendation: Provide marked crossing.

5.29 Provide dimension on plan, indicating a 24” straight curb segment, perpendicular to the direction of the cross walks.

1127B.5.10
ADAAG 4.7.10

5.30 The 24” straight curb segment must be within the marked crossing.

5.31 The bottom edge of the curb ramp should be perpendicular to the direction of the crosswalk.

EXCEPTION:

a. At diagonal curb ramps.
b. Where alignment of the curb ramp with the direction of the crosswalk would create excessive cross slope and warping.

5.32 Provide level cut through at pedestrian island (median), or provide a crowned cut through sloped at 8.3% max. with a 48” wide top landing.

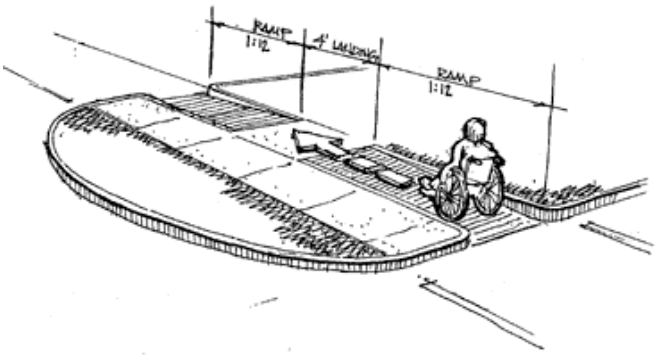

5.33 Provide and indicate a level 30”x48” space, centered and parallel to the pedestrian signal push button.

5.34 Indicate height of pedestrian signal push button (48” max, 40” preferred). Parallel

1117B.5.9

5.35 Provide and indicate the following at pedestrian signal push button:

- Activating force must be 5 lbs. or less.
- Push button must be 2” min. in at least one dimension.
- Textured horizontal yellow band 2” wide encircling the pole, and a 1” wide dark border band above and below this yellow band. Color-coding should be placed immediately above the control button.

© 2003 DSA/OUD

5	Project designer (PD) shall address the following marked or circled items, and any additional plan review comments on drawings and specifications before scheduling a back check appointment for access compliance (AC). Any questions or points of disagreement must be resolved prior to back check by fax to plan reviewer (PR).		Justification, Reference, or Code Citation (C.C.R. Title 24, u.o.n.)	Location of Item on Plans	Comments Notes Examples

Check List 5. CURB RAMPS AND PEDESTRIAN CROSSINGS

BLENDED TRANSITIONS

5.36 Where a walk crosses or adjoins a vehicular way, and the walking surfaces are not separated by curbs, railings, or other elements between the pedestrian areas and vehicular areas, the boundary between the areas must be defined by a continuous, yellow, 36” wide detectable warning stripe that differs from adjoining walking surface in resiliency or sound on cane contact.

1133B.8.5
ADAAG 4.29.5

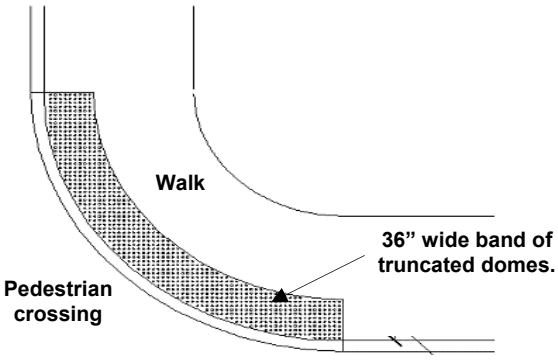

5.37 Recommendation: The detectable warning surface should be located so that the edge nearest the curb line is between 6” and 8” from the curb line.

PEDESTRIAN OVERPASSES AND UNDERPASSES

5.38 Pedestrian ramps on pedestrian grade separations must comply with the requirements for ramps.

1128B

EXCEPTION:

a. When the grade differential of the walking surface of a pedestrian grade separation exceeds 14 feet due to required height clearance and grade conditions, and DSA finds that wheelchair accessibility or equivalent facilitation would create an unreasonable hardship, such accessibility need not be provided. However, the requirements in these regulations relating to other types of mobility shall be complied with.
b. For existing facilities, this section shall not apply where, due to legal or physical constraints, the site of the project will not allow compliance with these regulations or equivalent facilitation without creating an unreasonable hardship.

NOTE:
Jurisdictional findings and determinations are subject to an internal DSA appeals process.

5.39 Provide and indicate level landings at pedestrian over- and underpasses:

1. Every 30” of vertical rise, if slope is greater than 5%. — 1133B.5.4.1

2. Every 400’ if slope is between 2% and 5%. — 1133B.7.6

© 2003 DSA/OUD

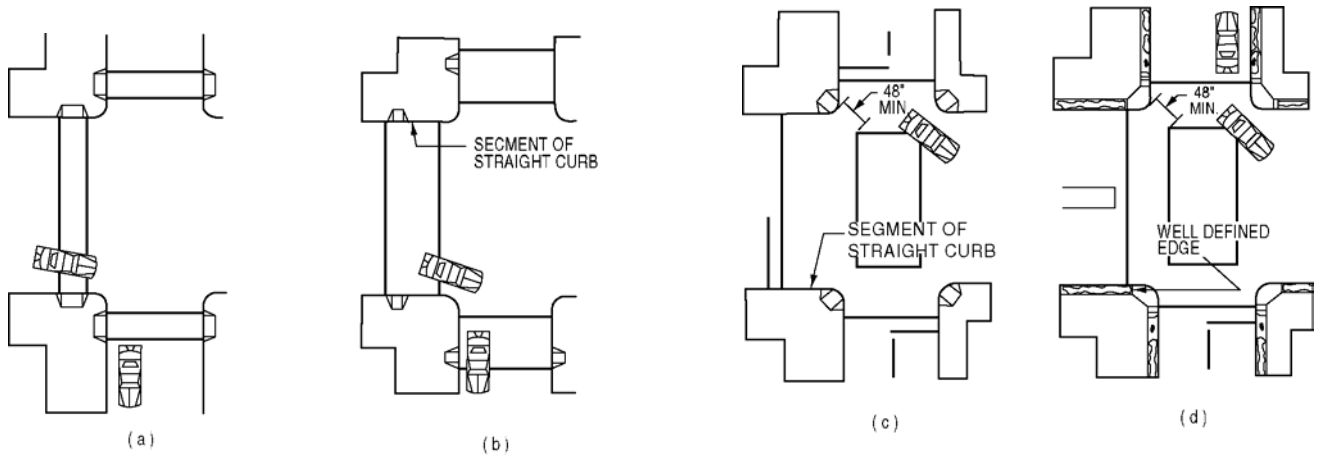

Fig 5-A. Typical Pedestrian Crossing Layouts

Height of Curb Face	*1:12 Flare Width at Curb*	*Ramp Run Length (Plan)**	*Total Needed Sidewalk Width (incl. 4' Landing)*
4" (10.2 cm)	***48" (1.22 m)***	***63" (1.6 m)***	***111" (2.82 m)***
5" (12.7 cm)	***60" (1.53 m)***	***78" (1.98 m)***	***126" (3.2 m)***
6" (15.2 cm)	***72" (1.83 m)***	***95" (2.41 m)***	***143" (3.63 m)***
7" (17.8 cm)	***84" (2.13 m)***	***111" (2.82 m)***	***159" (4.04 m)***
7.5" (19.0 cm)	***90" (2.29 m)***	***118.5" (3.01 m)***	***166.5" (4.23 m)***
8" (20.3 cm)	***96" (2.44 m)***	***126" (3.2 m)***	***174" (4.42 m)***

***) For ramp sloping 8.3% on sidewalk with 2% cross slope**

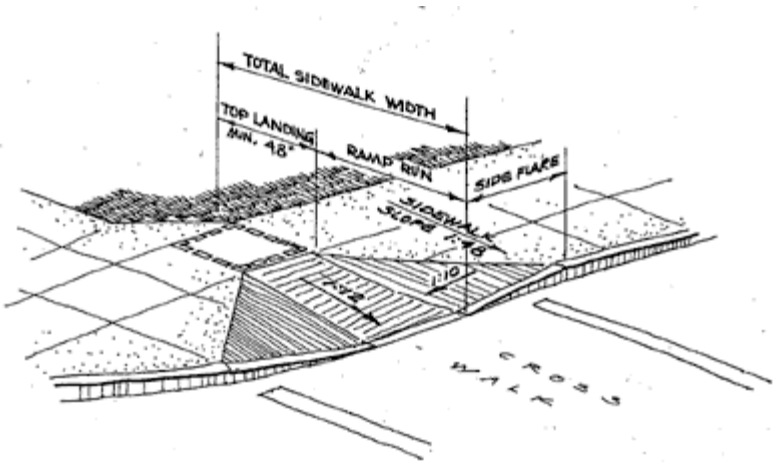

Fig 5-B. Sidewalk Width Requirement

6	Project designer (PD) shall address the following marked or circled items, and any additional plan review comments on drawings and specifications before scheduling a back check appointment for access compliance (AC). Any questions or points of disagreement must be resolved prior to back check by fax to plan reviewer (PR).		Justification, Reference, or Code Citation (C.C.R. Title 24, u.o.n.)	Location of Item on Plans	Comments Notes Examples
	Check List 6. WALKS AND SIDEWALKS				
6.1	For additional scoping requirements and exceptions see also applicable **DSA/AC Preliminary Review Checklists** and **Checklist 1.**				SIDEWALK: is a surfaced pedestrian way contiguous to a street used by the public.
6.2	All walks and sidewalks under this contract must be made accessible (i.e. those that are to be newly constructed or altered, or part of the required POT). EXCEPTION: a. In alteration projects, when DSA finds unreasonable hardship and when an alternative accessible POT is provided.		1114B.1.2		WALK: is a surfaced pedestrian way not located contiguous to a street used by the public.
6.3	Provide and indicate enlarged detail of surface material transition at: **1.** Any change in surface material. **2.** Where new construction meets existing surface. Vertical change in POT cannot exceed 1/4”. Level changes in POT between 1/4” and 1/2" must be beveled at 1:2 max slope.		1133B.7.4		
6.4	Provide and indicate continuous common surface material to be slip resistant, stable, firm and vibration free (bricks, cobble stones, rough pavers, wood boards, etc should not be used).		1133B.7.1 1124B.1		
6.5	Decomposed stone surfaces are not recommended. However, DSA may approve such surfaces for certain outdoor activity areas if decomposed stone (e.g., granite) is compressed at 95% min.				
6.6	Provide and indicate width of walk or sidewalk at this location. **1.** 48” min (60” preferred). **2.** 60” min if occupancy load is > 300. **3.** 60” min. wherever a person using a wheelchair may have to make a turn to access elements or equipment (e.g., at doors, gates, tables and seating accommodations, dispensers, drinking fountains, mail boxes, telephones, etc.). **4.** 60” min if there are no passing spaces, measuring 60”x60” min, located at reasonable intervals not to exceed 200’. EXCEPTION: a. When, because of right–of–way restrictions, natural barriers or other existing conditions, DSA determines that compliance with the 48” clear sidewalk width would create an unreasonable hardship, the clear width may be reduced to 36”. b. When, because of right–of–way restrictions, natural barriers or other existing conditions, DSA determines that compliance with the 60” clear sidewalk width would create an unreasonable hardship, the clear width may be reduced to 48”. This exception cannot be applied to reduce the required occupancy load width.		1133B.7.1 1133B.3.2 ADAAG 4.3.4		NOTE: Required sidewalk width must be measured exclusive of the curb. 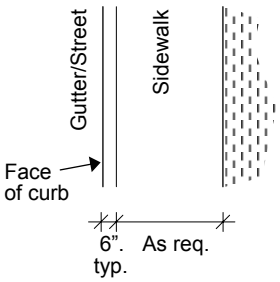

6	Project designer (PD) shall address the following marked or circled items, and any additional plan review comments on drawings and specifications before scheduling a back check appointment for access compliance (AC). Any questions or points of disagreement must be resolved prior to back check by fax to plan reviewer (PR).		Justification, Reference, or Code Citation (C.C.R. Title 24, u.o.n.)	Location of Item on Plans	Comments Notes Examples

Check List 6. WALKS AND SIDEWALKS

6.7	Provide spot elevation at this location to show how slope requirements are met.				
6.8	Slope perpendicular to the direction of travel (cross slope) must be less than 2%.		1133B.7.1.3 ADAAG 4.3.7		
6.9	At driveway, show how the 2% cross slope requirement is met. At a minimum, provide and indicate a 48” wide portion of the sidewalk to comply. Provide section through driveway. EXCEPTION: a. When, because of right–of–way restrictions, natural barriers or other existing conditions, DSA determines that compliance with the 48” clear sidewalk width would create an unreasonable hardship, the clear width may be reduced to 36”.				
6.10	Slope exceeds 5%. Provide curb ramp at this location. See **Checklist 5** for requirements.		1133B.7.3		
6.11	Slope exceeds 5%. Provide ramp at this location. See **Checklist 7** for requirements.				
6.12	Provide a level resting area, measuring 60”x60” every 400’, or indicate that slope in the direction of travel is 2% or less by providing spot elevations.				
6.13	Provide a passing space, measuring 60”x60” every 200’, or indicate width of walk to be 60” or more.		ADAAG 4.3.4		
6.14	Provide level areas (2% slope max in any direction) at doors and gates.		1133B.7.5		
6.15	Grating or swales should not be located in the POT. See **Checklist 3** for exceptions.		1133B.7.1.3 1133B.7.2		
6.16	Identify location of all gratings within the POT and provide cut sheet of gratings for back check review. Grate openings cannot exceed 1/2" in direction of traffic flow. Alternate direction of grate openings in plazas, courts, and other wide pedestrian areas.		1124B.4		
6.17	Level change between walk/sidewalk and adjacent surface exceeds 4” in height within 24” of the edge of the pedestrian way. Provide detail and indicate 6” warning curb at this location.				
6.18	Level change between walk/sidewalk and adjacent surface exceeds 30” in height. Provide detail and indicate guardrail (42” AFF) at this location.				

© 2003 DSA/OUD

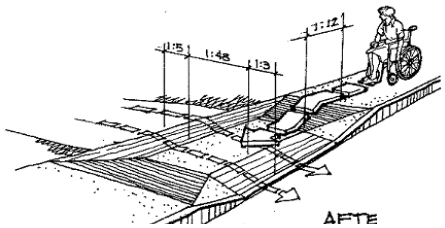

Combination Sidewalk

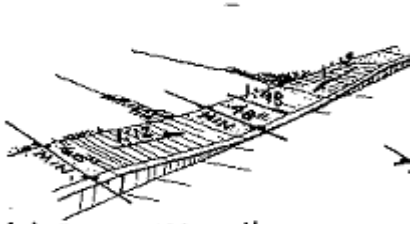

Ramp Sidewalk

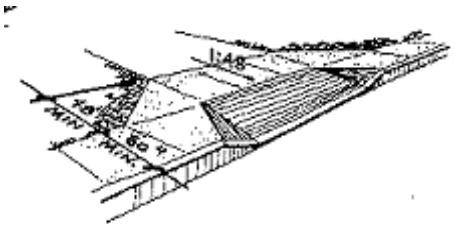

Apron Offset Sidewalk

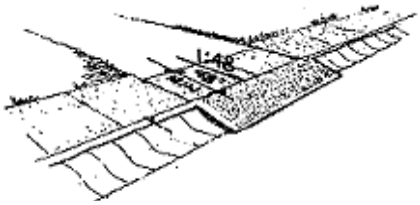

Gutter Bridgeplate

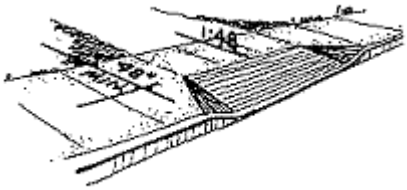

Wide Sidewalk

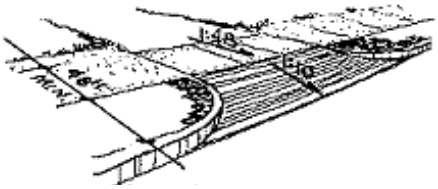

Setback Sidewalk

Fig 6-A. Examples of Sidewalk Driveway Connections

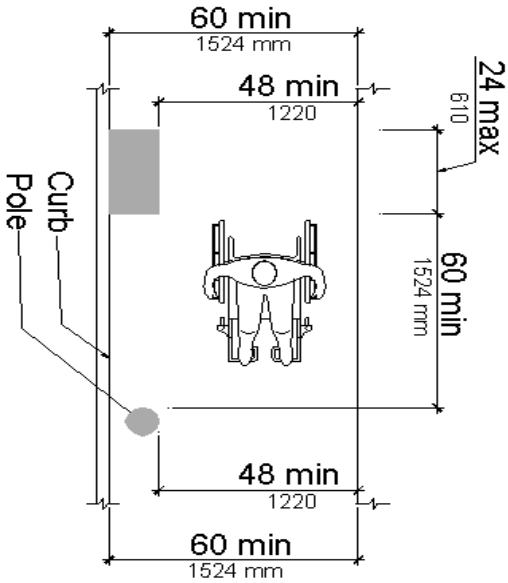

The preferred clear width of a pedestrian access route is 60 inches, exclusive of the width of the curb. Within the pedestrian access route, the minimum clear width of the *reduced vibration zone* shall be 48 inches, exclusive of the width of the curb.

Advisory: *Designers are encouraged to provide additional width where possible, especially in high use areas such as in urban environments, near shopping centers, schools, civic facilities. It is recommended that the pedestrian access route be no less than 72 inches wide in high use areas.*

Fig 6-B. Recommended Sidewalk Width

7	Project designer (PD) shall address the following marked or circled items, and any additional plan review comments on drawings and specifications before scheduling a back check appointment for access compliance (AC). Any questions or points of disagreement must be resolved prior to back check by fax to plan reviewer (PR).		Justification, Reference, or Code Citation (C.C.R. Title 24, u.o.n.)	Location of Item on Plans	Comments Notes Examples

Check List 7. ACCESSIBLE RAMPS

7.1	For additional scoping requirements and exceptions see also applicable **DSA/AC Preliminary Review Checklists** and **Checklist 1.**			
RAMPS				
	Indicate location, layout, and slope of all ramps on site plan.			
	All ramps under this contract must be made accessible (i.e. those that are to be newly constructed or altered, or part of the required POT).		1114B.1.2	
	EXCEPTION:			
	a. In alteration projects, when DSA finds unreasonable hardship and when an alternative accessible POT is provided.			
	Indicate compliance status of existing ramp in the POT (slope, width, landings).			
	Provide enlarged plan and sections (longitudinal and transversal) of ramp in 1/4" scale.			
	Typical ramp detail provided is not similar to actual layout. Modify to provide dimensioned detail in 1/4” scale representing the actual layout.			
	Indicate ramp slope. Use <u>least possible</u> but never more than 8.3% max.		1133B.5.1 ADAAG 4.8.2	
	If lengthening of ramp run is technically feasible at this location, decrease slope to the least possible.			
	Recommendation: ramps at facilities that primarily serve children, such as elementary schools and daycares, should not have slopes exceeding 1:16.			
	Slope perpendicular to the direction of travel (cross slope) must be less than 2%.		1133B.5.3.1	
	Provide spot elevation and ramp run dimension at this location to show how slope requirements are met.			
	Ramp run cannot change direction between level landings.			
	EXCEPTION:			
	a. Circular ramps with an inside radius of 30’ min.			
	Provide and indicate slip-resistant surface (e.g. heavy broom brush if ramp slope is >6%)			
	Provide and indicate width of ramp at this location.			
	1. 48” min (60” preferred).		1133B.5.2.1	
	EXCEPTION:			

© 2003 DSA/OUD

Project designer (PD) shall address the following marked or circled items, and any additional plan review comments on drawings and specifications before scheduling a back check appointment for access compliance (AC). Any questions or points of disagreement must be resolved prior to back check by fax to plan reviewer (PR).

Check List 7. ACCESSIBLE RAMPS

		Justification, Reference, or Code Citation (C.C.R. Title 24, u.o.n.)	Location of Item on Plans	Comments Notes Examples
a. Handrails may project into the required width of a distance of 3 1/2" from each side. b. Other projections (e.g., trim, decorative features) may project into the required width a distance of 1 1/2" from each side.		1003.3.4.2		
2. 60" min clear, if ramp is serving entrances to buildings where the ramp is the only exit discharge path or an entrance/exit of a building with an occupancy load of 300 or more.		1133B.5.2.2 ADAAG 4.3.4		
Provide and indicate one of the following at ramp which is not bounded by a wall or which has floor-mounted support posts (or a fence with a smooth and uninterrupted surface). **1.** 2" min high curb. **2.** Wheel-guide rail centered at 3" AFF (+/- 1")		1133B.5.6		
Provide and indicate one of the following at ramp landing which is not bounded by a wall or which has floor-mounted support posts (or a fence with a smooth and uninterrupted surface) if the adjacent grade drops more than 4" vertically. **1.** 2" min high curb. **2.** Wheel guide rail centered at 3" AFF (+/- 1")		1133B.5.4.9		
RAMP LANDINGS				
Provide and indicate dimension of top landing. • 60"x60" min. • Level and clear (2% max at exterior ramps).		1133B.5.4.2		
Provide and indicate dimension of bottom landing • 72" long and as wide as the ramp, if no change in direction or less than 30˚. • 72" long and 60" wide, if change in direction (>30˚). • Level and clear (2% max at exterior ramps).		1133B.5.4.5 1133B.5.4.6 1003.3.4.4 ADAAG 4.8.4		
Provide and indicate dimension of intermediate landing. • 60" long and as wide as the ramp, if no change in direction or less than 30˚. • 72" long and 60" wide, if change in direction (>30˚). • Level and clear (2% max at exterior ramps).		1133B.5.4.5 1133B.5.4.6 ADAAG 4.8.4		
Provide and indicate dimension of ramp landing at door or gate. • Doors in any position cannot reduce the minimum dimension of the landing to less than 42 inches. • Fully opened doors cannot reduce the required width of the landing more than 3". • Required door landing size per Fig. 11B-26, but never less than 24"x60" strike edge clearance at exterior and interior doors.		1133B.5.4.3 1003.3.4.4 DSA IR #94-18 ADAAG 4.8.4(4)		

© 2003 DSA/OUD

Project designer (PD) shall address the following marked or circled items, and any additional plan review comments on drawings and specifications before scheduling a back check appointment for access compliance (AC). Any questions or points of disagreement must be resolved prior to back check by fax to plan reviewer (PR).

	Justification, Reference, or Code Citation (C.C.R. Title 24, u.o.n.)	Location of Item on Plans	Comments Notes Examples

Check List 7. ACCESSIBLE RAMPS

- Level and clear (2% max at exterior ramps).

Ramp run rises more than 30” in height. Provide landing. — 1133B.5.4.1

Increase dimension of intermediate or bottom landing to 72” long and 60” wide if change in direction of POT exceeds 30 degrees. — 1133B.5.4.6

Wheel-guide rail, curb, or other element encroaches into the required 72” long landing (below 27” AFF). Modify to provide 72” clear.

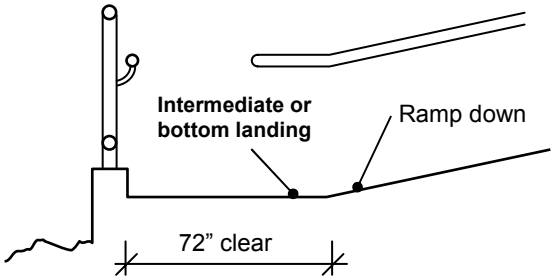

Indicate how exterior ramps and landings are designed so that water will not accumulate on walking surface.

Transition line at bottom or top of ramp must be perpendicular to ramp run.

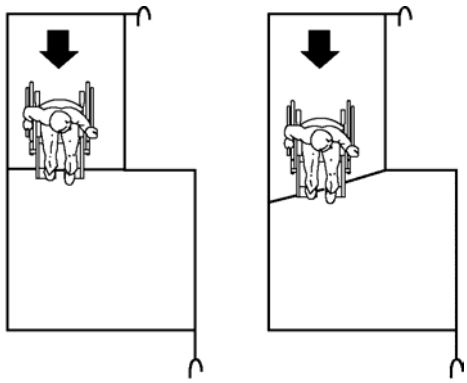

CONFORMING NONCONFORMING

Provide enlarged detail, showing smooth transition between ramp runs, landings, and existing surfaces.

Intermediate landings should be located to divide the sloped portions of a ramp into equal sections.

HANDRAILS FOR RAMPS

Provide handrails on both sides of ramp. — 1133B.5.5.1 ADAAG 4.8.5

Project designer (PD) shall address the following marked or circled items, and any additional plan review comments on drawings and specifications before scheduling a back check appointment for access compliance (AC). Any questions or points of disagreement must be resolved prior to back check by fax to plan reviewer (PR).

Check List 7. ACCESSIBLE RAMPS

		Justification, Reference, or Code Citation (C.C.R. Title 24, u.o.n.)	Location of Item on Plans	Comments Notes Examples
EXCEPTION: a. Ramps at exterior door landings that rise less than 6” <u>and</u> have a projection of less than 72”, <u>and</u> when the adjacent drop-off is less than 4”. b. Curb ramps. c. Ramps immediately adjacent to seating in assembly areas.		1133B.5.5.1 ADAAG 4.8.5		
Modify design to provide continuous handrails the full length of the ramp run, plus extensions.				
Modify design to provide continuous inside handrails at switchback or dogleg ramp.				
Top of gripping surface must be between 34” and 38” AFF. EXCEPTION: a. In projects under DSA jurisdiction, relocated portables built and constructed prior to April 1, 1994 may have ramps with handrails meeting former code requirements, 30” to 34” AFF.		**DSA IR #94-16**		
Recommendation: handrails at facilities that primarily serve elementary school aged children should have additional handrails at 27” AFF. It is also recommended that the vertical clearance between handrails be at least 9” in order to reduce the risk of entrapment.		Tbl. 1115B-1 ADAAG A4.8.5		
Recommendation: handrails at facilities that primarily serve kindergarten aged children should have additional handrails at 22” AFF.		Tbl. 1115B-1 ADAAG A4.8.5		
Indicate a specific height from finished floor to top of handrail, not a range.				
Extend handrail 12” beyond the top and bottom of the ramp run.		1133B.5.5.1 ADAAG 4.8.5(2)		NOTE: Top and bottom handrail extensions are important safety features for people with balance problems and must therefore extend in the direction of the ramp run.

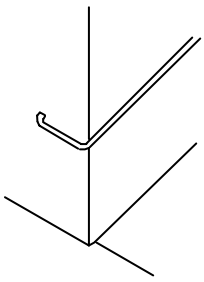

Not Compliant
Insufficient ramp recess: Handrail at landing of ramp does NOT extend 12 inches in the direction of the ramp run.

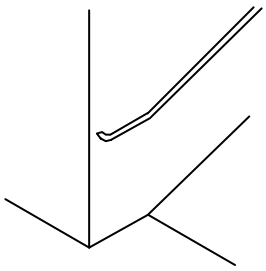

Compliant
Correct ramp recess: Handrail at landing of ramp does extend 12 inches in the direction of the ramp run.

Handrail extension cannot extend into the required width of an adjacent path of travel. Relocate ramp or modify design.				

© 2003 DSA/OUD

Project designer (PD) shall address the following marked or circled items, and any additional plan review comments on drawings and specifications before scheduling a back check appointment for access compliance (AC). Any questions or points of disagreement must be resolved prior to back check by fax to plan reviewer (PR).

		Justification, Reference, or Code Citation (C.C.R. Title 24, u.o.n.)	Location of Item on Plans	Comments Notes Examples

Check List 7. ACCESSIBLE RAMPS

Provide 12” handrail extension on the interior of switchback or dogleg ramp landings. Extension to be parallel with landing surface and in the direction of the sloped ramp run.		1133B.5.4.6		
Handrail extension must be parallel to landing surface.				
Provide cane detectable rail portion between 0.0” and 27” AFF if portion of rail that is more than 27” AFF protrudes more than 4” into a perpendicular running circulation path.				
Return ends of handrail extension to wall, floor or post.				
Indicate gripping portion between 1 1/4" and 1 1/2” outside diameter, or provide shape with equivalent gripping surface (i.e. 4”-6 1/4” perimeter, and 2 1/4" max in any direction). 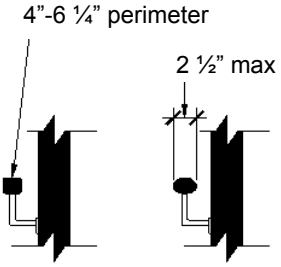				NOTE: When using industry standard round steel handrails (nominally dimensioned) DSA may approve an actual outside diameter of 1 7/8” max.
Provide and indicate 1 1/2” clearance from adjacent obstruction (wall or guardrail).		ADAAG 4.8.5(3)		
Modify recess to be 3” deep for 18” min height, measured from the top of the handrail 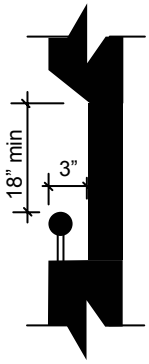				
All gripping surfaces must be smooth, with no sharp edges, continuous, without interruption by newel posts, and other construction elements, or obstructions. EXCEPTION: a. Handrail brackets or balusters attached to the bottom surface of the handrail, provided that: • not more than 20% of the handrail length is obstructed, and				NOTE: Several provisions for handrails are based on the proposed revisions to federal design standards (ADA/ABA accessibility guidelines).

 © 2003 DSA/OUD

Project designer (PD) shall address the following marked or circled items, and any additional plan review comments on drawings and specifications before scheduling a back check appointment for access compliance (AC). Any questions or points of disagreement must be resolved prior to back check by fax to plan reviewer (PR).

		Justification, Reference, or Code Citation (C.C.R. Title 24, u.o.n.)	Location of Item on Plans	Comments Notes Examples

Check List 7. ACCESSIBLE RAMPS

- horizontal projections beyond the sides of the handrail occur 1 1/2” min (2 1/2" preferred) below the bottom of the handrail, and
- all edges have a 1/8” min radius.

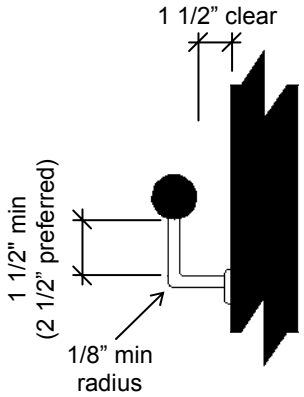

Provide guardrail, 42” high, as a vertical barrier along the open edges of ramps, platform, or landings to prevent persons from falling off the open edge if drop exceeds 30”. — 1133B.5.7

Indicate that a sphere 4” in diameter cannot pass through any opening at guardrails (intermediate rails or an ornamental pattern.) — 1133B.5.7.4

© 2003 DSA/OUD

8	Project designer (PD) shall address the following marked or circled items, and any additional plan review comments on drawings and specifications before scheduling a back check appointment for access compliance (AC). Any questions or points of disagreement must be resolved prior to back check by fax to plan reviewer (PR).		Justification, Reference, or Code Citation (C.C.R. Title 24, u.o.n.)	Location of Item on Plans	Comments Notes Examples
	Check List 8. DOORS AND GATES				
8.1	For additional scoping requirements and exceptions see also applicable **DSA/AC Preliminary Review Checklists** and **Checklist 1.**				
8.2	Identify the following doors with a mark on plans (to correspond with numbers/characters in door schedule): **1.** All doors for new construction. **2.** All doors that are being altered in existing buildings. **3.** All doors in existing buildings that are in the POT, including existing doors.				
8.3	Include all marked doors in door schedule.				
8.4	Provide the following information for each door in the door schedule: **1.** Door mark number/character. **2.** Room name/number. **3.** Width of door leaf or clear opening. **4.** Reference to sheet and detail for new or existing door types. **5.** Reference to sheet and detail for new or existing thresholds for exterior doors, and interior doors with special flooring transitions (gymnasium, rubber flooring, etc). **6.** Reference to sheet and detail for required signage including: tactile/Braille exit signs, restroom signs, entrance signs, identifying room signs, directional signs, etc. **7.** “Copy” of door signage. **8.** Hardware group for new doors or existing doors that are being altered.				
8.5	Indicate either on plan or in schedule that existing door in the POT has accessible threshold, hardware, closer, and 10” smooth surface at bottom of push side (e.g. kick-plate).				
8.6	All entrances and ground floor exit doors must be made accessible. EXCEPTION: a. Exterior ground–floor exits serving smoke–proof enclosures, stairwells and exit doors servicing stairs only. b. Exits in excess of those required by Section 1114B.2.1, and which are more than 24” above grade. Such doors shall have visual sign which indicates, by means of an arrow and/or text, the location of the nearest accessible exit. The warning sign shall comply with Section 1117B.5 and be mounted at a location so steps do not need to be retraced.		1133B.1.1.1.1		

© 2003 DSA/OUD

Project designer (PD) shall address the following marked or circled items, and any additional plan review comments on drawings and specifications before scheduling a back check appointment for access compliance (AC). Any questions or points of disagreement must be resolved prior to back check by fax to plan reviewer (PR).

Check List 8. DOORS AND GATES

		Justification, Reference, or Code Citation (C.C.R. Title 24, u.o.n.)	Location of Item on Plans	Comments Notes Examples
	c. In existing buildings, where DSA determines that compliance would create an unreasonable hardship, an exception may be granted when equivalent facilitation is provided. Equivalent facilitation would require at least one entrance to be accessible.			
	d. In existing buildings where DSA determines that, due to legal or physical constraints, compliance with the height requirement or equivalent facilitation would create an unreasonable hardship.			NOTE: Jurisdictional findings and determinations are subject to an internal DSA appeals process.
8.7	All doors on an accessible path of travel must be made accessible.	1114B.1.2		
8.8	Revolving doors or turnstiles cannot be used as the only means of entrance and exit. Provide an accessible door adjacent, designed as to facilitate the same use pattern.	1133B.2.3.3 ADAAG 4.13.2		
8.9	Provide and indicate door leafs to be 3'-0" min (4'-0" max) in width and 6'-8" min in height.	1133B.2.2		
8.10	Hinged door must open at least 90˚.			
8.11	Door must provide a clear opening of 32" when 90˚ opened (measured between the face of the door and the opposite stop).	1133B.2.3		
	EXCEPTION:			
	a. The provisions of Section 1133B.2.3 do not apply to existing buildings, except when otherwise required under conditions applicable to access for persons with disabilities. In existing buildings, where the occupant load is less than 10, except Group I, Division 1 Occupancies, doorways may be 30" in clear width.			NOTE: Exceptions (a), (b), and (c) cannot be applied to doors required to be accessible per ADAAG 4.1
	b. Where occupant load is greater than 10 and it is determined that compliance with Section 1133B.2.3 would create an unreasonable hardship, doorways may be 30 inches in clear width.			
	c. In existing buildings where DSA determines that compliance with 1133B.2.3, or equivalent facilitation would create an unreasonable hardship.			NOTE: Jurisdictional findings and determinations are subject to an internal DSA appeals process.
	d. Doors not requiring full user passage, such as shallow closets (i.e., <60" wide), may have the clear opening reduced to 20" min.	ADAAG 4.13.5		
	e. In existing buildings, where it is technically infeasible to comply with clear opening width requirements projection of 5/8 in maximum will be permitted for the latch side stop.	ADAAG 4.1.6(3)(d)(i)		
8.12	In existing buildings, when a required exit is not accessible, provide sign to direct people to the nearest accessible exit or evacuation assistance area. The sign shall comply with Section 1117B.5 and be mounted at a location so steps do not need to be retraced.			
8.13	Provide clear opening width dimension.			

© 2003 DSA/OUD

8	Project designer (PD) shall address the following marked or circled items, and any additional plan review comments on drawings and specifications before scheduling a back check appointment for access compliance (AC). Any questions or points of disagreement must be resolved prior to back check by fax to plan reviewer (PR).		Justification, Reference, or Code Citation (C.C.R. Title 24, u.o.n.)	Location of Item on Plans	Comments Notes Examples
	Check List 8. DOORS AND GATES				
8.14	At double doors, with or without mullion, automatic or manual, indicate clear opening width of one of the doors to be 32” min. 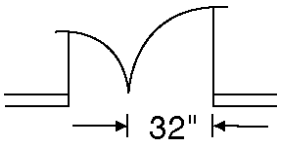 		1133B.2.3.1 ADAAG 4.13.5		
8.15	Provide and indicate a clear and level (0.0% slope) landing on each side of door. EXCEPTION: a. Door landings may slope 2% max where required to drain.				
8.16	Provide and indicate the following maneuvering clearances and level landings at door: **1.** Front approach to pull side of door must have maneuvering space that extends 24” min. at exterior doors (18” min at interior doors) beyond the latch side of the door and 60” min. perpendicular to the doorway. **2.** Front approach to push side of door, equipped with closer and latch, must have maneuvering space that extends 12” min. beyond the latch side of the door and 48” min. perpendicular to the doorway. **3.** Front approach to push side of door, not equipped with latch and closer, must have maneuvering space that is the same width as door opening and extends 48” min. perpendicular to the doorway. **4.** Hinge-side approach to pull side of door must have maneuvering space that extends 36” min. beyond the latch side of the door if 60” min. is provided perpendicular to the doorway. **5.** Hinge-side approach to push side of door, not equipped with latch and closer, must have a maneuvering space of 54” min., parallel to the doorway and 42” min., perpendicular to the doorway. **6.** Hinge side approach to push side of door, equipped with latch and closer, must have maneuvering space of 54” min., parallel to the doorway, 48” min. perpendicular to the doorway. **7.** Latch-side approach to pull side of door, with closers, must have maneuvering space that extends 24” min. beyond the latch side of the door and 60” min. perpendicular to the doorway. **8.** Latch-side approach to pull side of door, not equipped with closers, must have maneuvering space that extends 24” min. beyond the latch side of the door and 60” min. perpendicular to the doorway. **9.** Latch-side approach to push side of door, with closers, must have maneuvering space that extends 24” min.		1133B.2.4.2 Fig. 11B-26A Fig. 11B-26B Fig. 11B-33a ADAAG Fig 25		NOTE: Door landings adjacent to ramps, stairs, or other hazardous conditions may require larger landings.

Project designer (PD) shall address the following marked or circled items, and any additional plan review comments on drawings and specifications before scheduling a back check appointment for access compliance (AC). Any questions or points of disagreement must be resolved prior to back check by fax to plan reviewer (PR).

	Justification, Reference, or Code Citation (C.C.R. Title 24, u.o.n.)	Location of Item on Plans	Comments Notes Examples

Check List 8. DOORS AND GATES

parallel to the doorway beyond the latch side of the door and 48” min. perpendicular to the doorway.

10. Latch-side approach to push side of door, not equipped with closers, must have maneuvering space that extends 24” min. parallel to the doorway beyond the latch side of the door and 42” min. perpendicular to the doorway.

8.17 Door in alcove must comply with the clearances for front approach.

8.18 At recessed doors, where the plane of the doorway is offset 8” or more from any obstruction within 18” measured laterally on the latch side, the door shall be provided with maneuvering clearance for front approach.

1133B.2.5.3
ADAAG 4.13.5

8.19 Level difference at landing/threshold transition between 1/4" and 1/2" must be beveled at 1:2.

1133B.2.4.1

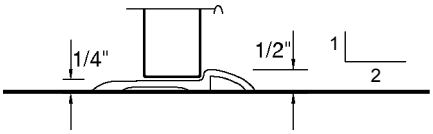

8.20 Indicate level difference between top of threshold and door landing to be 1/2" max (if beveled.)

8.21 Indicate level difference between interior and exterior door landing to be 1/2" max (if beveled.)

8.22 In existing projects with hardship approval, level difference at landing/threshold transition greater than 1/2" can be accomplished by means of ramp or sloped walking surface and include required level landings.

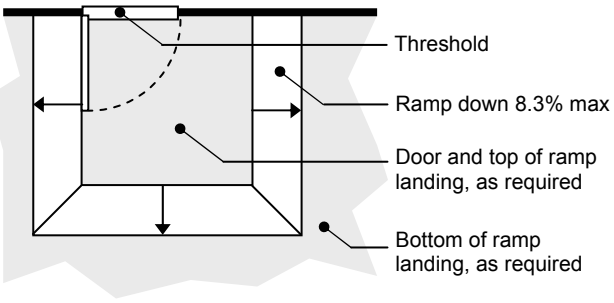

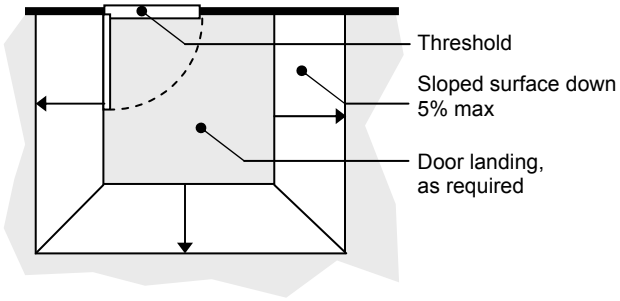

NOTE:
Handrails are not required on ramps at exterior door landings with less than 6” rise and 72” in length (1133B.5.5.1, ADAAG 4.8.5).

© 2003 DSA/OUD

		Justification, Reference, or Code Citation (C.C.R. Title 24, u.o.n.)	Location of Item on Plans	Comments Notes Examples
Check List 8.	**DOORS AND GATES**			
	EXCEPTION:			
	a. Where DSA determines unreasonable hardship, existing thresholds 3/4" high or less, may remain if they have (or are modified to have) a beveled edge, sloped at 1:2.	ADAAG 4.1.6(3)(d)(ii)		
8.23	Doormats, grills, and carpets must be adequately anchored.	1133B.1.1.1.3		
8.24	Exterior doormats or grills should be recessed and flush with the surrounding surface.			
DOOR HARDWARE				
8.25	Provide adjustable closers. At doors wider than 3'-0", verify that closer will meet requirements.			
8.26	If door closers are used, indicate maximum effort to operate doors either on drawings or in specification:	1133B.2.5		
	1. 5 lbs max for interior doors.			
	2. 5 lbs max for exterior doors.			
	3. Recommendation: 3 lbs for doors which are primarily used by children.			
8.27	Delete note that states that fire doors or rated doors can have up to 15 lbs operating effort, or provide the following note: "The Authority having Jurisdiction may increase the maximum effort to operate fire doors to achieve positive latching, but not to exceed 15 lbs max."	1133B.2.5		
8.28	Provide alternative design solution at locations where it is apparent that positive latching cannot be achieved within the required range (e.g., in high-rise buildings with an air pressurization system, or at sites with known, significant wind forces). Consider:			
	1. Automatic or power-assisted doors.			
	2. Sliding doors.			
	3. Change door swing.			
	4. Omit latch.			
	5. No doors at all.			
	6. Provide shelter.			
8.29	Recommendation: Critical doors at main entrances or heavy-use areas should be automatic or power-assisted.			
8.30	Relocate push button to operate power-assisted doors to a more accessible location that is adjacent to or part of the general path of travel; visible and easily recognizable from main approach; and so that the clear space in front of the button is outside any door swing.	ADAAG 4.27		

 © 2003 DSA/OUD

8	Project designer (PD) shall address the following marked or circled items, and any additional plan review comments on drawings and specifications before scheduling a back check appointment for access compliance (AC). Any questions or points of disagreement must be resolved prior to back check by fax to plan reviewer (PR).		Justification, Reference, or Code Citation (C.C.R. Title 24, u.o.n.)	Location of Item on Plans	Comments Notes Examples
	Check List 8. DOORS AND GATES				
8.31	Indicate height of push button to operate power-assisted door to be 48” max AFF (recommendation: 40”).				
8.32	Indicate mounting height of hand-activated door hardware, including all dead bolts, between 30” and 44” AFF (36” preferred). EXCEPTION: a. DSA may approve a higher installation height at gates to swimming pools if required for the safety of children.		1133B.2.5.2		NOTE: See **Checklist 22** for additional hardware requirement at hotel and motel unit doors.
8.33	Deadbolts are not permitted unless operable with single effort by lever type hardware.				
8.34	Provide note or detail indicating location of floor-mounted doorstops and similar obstructions to be installed 4” max from the face of the wall or partition.		DSA IR #99-08		
8.35	Indicate smooth, uninterrupted surface at the bottom 10” of push and pull side of door leaf.		1133B.2.6		
8.36	Provide a 10” high kick-plate cover at the bottom of the push side of narrow frame doors.				
8.37	Provide a 10” high kick-plate cover at the bottom of doors where hardware is surface mounted (i.e. exposed rod for panic device).				
8.38	For access requiring security, provide door lock system that does not require any pinching, twisting or grasping. (i.e. proximity reader type electronic lock.)				
GATES					
8.39	All gates intended for pedestrian use, including ticket gates, must comply with all applicable requirements of doors (see items above).		1133B.1.1.1.4 ADAAG 4.13.3 1133B.1.1.1.4		
8.40	Identify gate with a mark on plans and include in door schedule.				
8.41	Provide and indicate kick-plate and accessible operating hardware at gate.				
8.42	Provide enlarged detail of gate and indicate gap between floor surface and bottom of gate to be 3” max.				
8.43	DSA may approve gates that do not comply with all requirements if a sign adjacent to gate is provided that states: “Gate to remain locked in the open position during business/ school hours or during any public functions.” Characters must be in 1” capital letters and contrasting in color.				
8.44	Gate on required exit path must comply with exit door and hardware requirement.		1133B.1.1.1.4		

© 2003 DSA/OUD

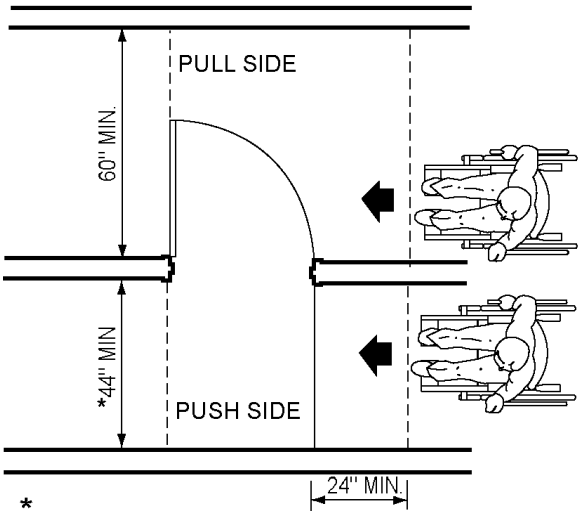

*
NOTE:
48" MINNIMUM IF DOOR
HAS A CLOSER

LATCH APPROACH

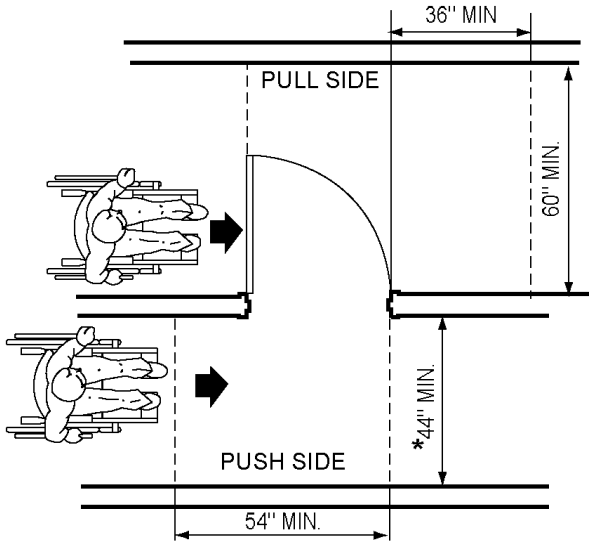

*
NOTE:
48" MINIMUM IF DOOR
HAS BOTH A LATCH
AND A CLOSER

HINGE APPROACH

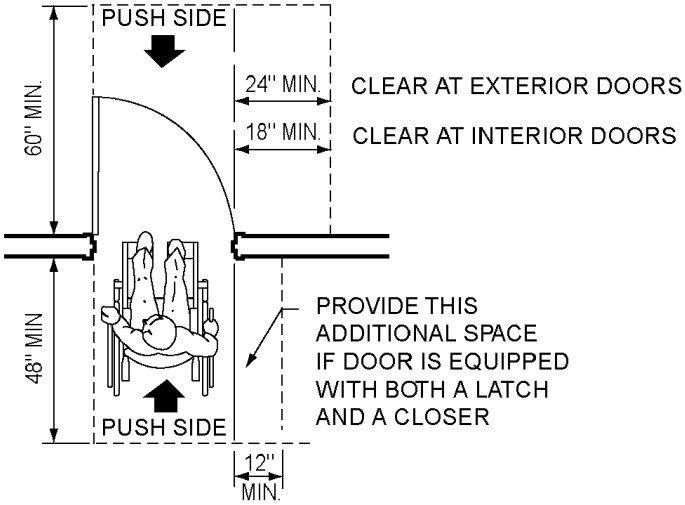

FRONT APPROACH

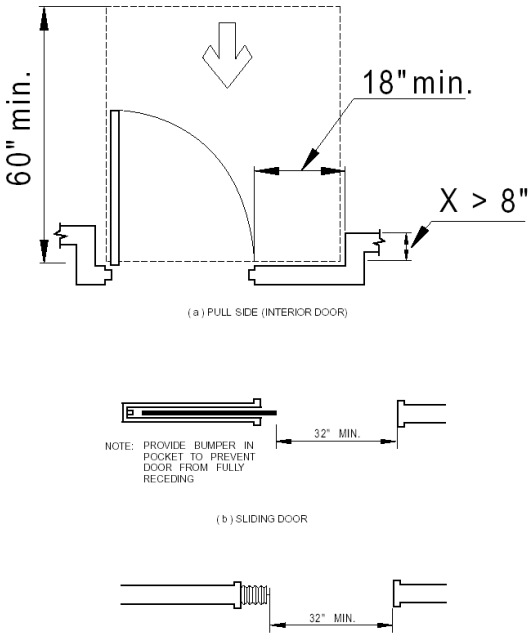

Fig 8-A. Door Maneuvering Clearances and Landings

9	Project designer (PD) shall address the following marked or circled items, and any additional plan review comments on drawings and specifications before scheduling a back check appointment for access compliance (AC). Any questions or points of disagreement must be resolved prior to back check by fax to plan reviewer (PR).		Justification, Reference, or Code Citation (C.C.R. Title 24, u.o.n.)	Location of Item on Plans	Comments Notes Examples
	Check List 9. CORRIDORS AND VESTIBULES				
9.1	For additional scoping requirements see also applicable **DSA/AC Preliminary Review Checklists.**				
	CORRIDORS, HALLWAYS, EXTERIOR EXIT BALCONIES				
9.2	All corridors, hallways, and exterior exit balconies must be made accessible.				
	EXCEPTION:				
	a. In existing buildings, when area is not part of the planned alteration or part of the required path of travel to the area of alteration.				
	b. Corridors, hallways, and exterior exit balconies on floors or portions of floors not customarily occupied, including non-occupiable or employee spaces accessed only by ladders, catwalks, crawl spaces, very narrow passageways, and frequented only by service personnel for repair or maintenance purposes: such spaces as elevator pits and elevator penthouses, piping and equipment catwalks and machinery rooms need not be accessible with the exception of stair stripping.		1103B.1		
9.3	Provide and indicate clear width at this location.				
	1. 36” min if occupancy load is <10.		1133B.3.1		
	2. 44” min if occupancy load is >10.				
	3. 60” min if corridor, hallway, or exterior exit balcony exceeds 200’ in length without a passing space, measuring 60”x60” min.		1133B.3.2 ADAAG 4.3.4		
	EXCEPTION:				
	a. In existing buildings, where DSA determines that compliance would create an unreasonable hardship, an exception may be granted when equivalent facilitation is provided.				
	b. In existing buildings where DSA determines that, due to legal or physical constraints, compliance with the height requirement or equivalent facilitation would create an unreasonable hardship.				NOTE: Jurisdictional findings and determinations are subject to an internal DSA appeals process.
9.4	Corridor, hallway, or exterior exit balcony in Group E, Div. 1 occupancy (K-12 facilities), serving an occupancy load of 100 or more must be 72” min wide.		1007.3.5		
9.5	Corridor, hallway, or exterior exit balcony in Group E, Div. 1 occupancy (K-12 facilities), serving an occupancy load of less than 100 must be 44” min wide.				
9.6	Corridor, hallway, or exterior exit balcony slopes more than 5%. Indicate compliance with all requirements for ramps.				
9.7	Provide and indicate additional maneuvering space at the following conditions:				

© 2003 DSA/OUD

9	Project designer (PD) shall address the following marked or circled items, and any additional plan review comments on drawings and specifications before scheduling a back check appointment for access compliance (AC). Any questions or points of disagreement must be resolved prior to back check by fax to plan reviewer (PR).		Justification, Reference, or Code Citation (C.C.R. Title 24, u.o.n.)	Location of Item on Plans	Comments Notes Examples

Check List 9. CORRIDORS AND VESTIBULES

1. When turning around an obstruction. — Fig. 11B-5E

NOTE:
If occupancy load is 10 or more, the minimum width of all *dimensions must be increased to 44” min.

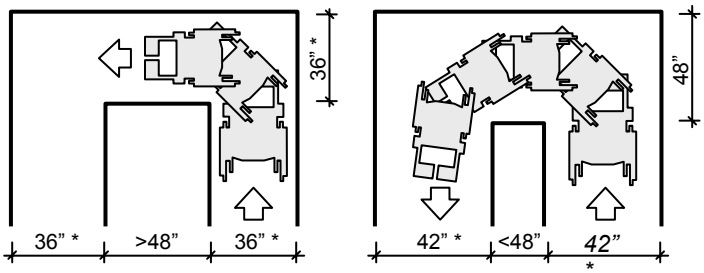

2. Wherever a person using a wheelchair may have to make an 180˚ turn.

3. At doors and gates. — Fig. 11B-26

4. To access elements or equipment.

9.8 Wall mounted object with bottom edge between 27” and 80” above the ground protrudes more than 4” into pedestrian circulation area. — 1133.8.6

1. Provide cane detectable rails.

2. Provide detectable warning surface.

3. Remove, relocate, recess, or modify protruding object.

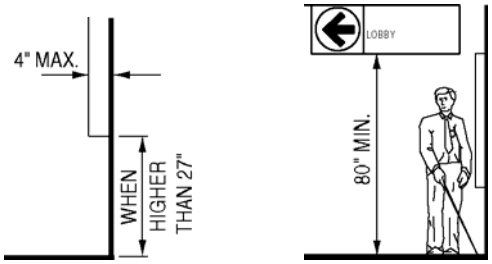

9.9 Dead end corridor, hallway, or exterior exit balcony cannot exceed 20’ in length. — 1004.2.6

9.10 Provide guardrail, 42” high, as a vertical barrier along the open edges of corridor, hallway, or exterior exit balcony to prevent persons from falling off the open edge if drop exceeds 30”. — 1133B.5.7.3 509

VESTIBULES

9.11 Indicate and provide 48” min between two hinged or pivoted doors plus the width of any door swinging into the space. — 1133B.2.4.4 Fig. 11B-30 ADAAG 4.13.7

9.12 Doors in series must swing either in the same direction or away from the space between the doors.

9.13 At doors openings at adjacent walls, provide and indicate a 30”x48” clear floor space in the vestibule and outside the area of the door swing. — Fig. 11B-30(a)

© 2003 DSA/OUD

10	Project designer (PD) shall address the following marked or circled items, and any additional plan review comments on drawings and specifications before scheduling a back check appointment for access compliance (AC). Any questions or points of disagreement must be resolved prior to back check by fax to plan reviewer (PR).		Justification or Code Citation (C.C.R. Title 24, u.o.n.)	Location of Item on Plans	Comments Notes Examples

Check List 10. STAIRS AND STEPS

10.1	All stairs, stairways, and steps must be accessible.		1114B.1.1 1133B.4		NOTE: All vertical level changes, exceeding 1/4" in height (or ½" if beveled), and within a pedestrian circulation area are considered stairs or steps, with the exception of curbs that border vehicular ways.
	EXCEPTION: a. In existing buildings, when stairs are not part of the planned alteration and vertical access is provided through elevators, lifts or ramps, stairways need not be accessible. b. Stairs to floors or portions of floors not customarily occupied, including non-occupiable or employee spaces accessed only by ladders, catwalks, crawl spaces, very narrow passageways, and frequented only by service personnel for repair or maintenance purposes: such spaces as elevator pits and elevator penthouses, piping and equipment catwalks and machinery rooms need not be accessible with the exception of stair striping.		1103B.1		
10.2	Single steps are considered stairs and must comply with all requirements applicable to stairways, including tread, riser and landing dimensions, color striping, and handrails.		DSA IR #96-10		
10.3	Stair treads and risers must comply with the following: **1.** Treads must be uniform and not less than 11” wide. **2.** Risers must be uniform, and between 4” and 7” high. **3.** Risers must be closed. **4.** Recommendation: Treads should be less than 17 1/2" wide. **5.** Recommendation: A safe and convenient tread-riser ratio is best achieved by having the product of two risers plus one tread be 24.5” +/-1/2” (2R + T=24.5).				
	EXCEPTION: a. In existing buildings, where DSA determines that compliance would create an unreasonable hardship, an exception may be granted when equivalent facilitation is provided. b. In existing buildings where DSA determines that, due to legal or physical constraints, compliance with the height requirement or equivalent facilitation would create an unreasonable hardship.				NOTE: Jurisdictional findings and determinations for exception (b) are subject to an internal DSA appeals process.
10.4	Skewed, angled, or kinked stair treads do not provide uniform tread width. Modify design (e.g., by providing a handrail). 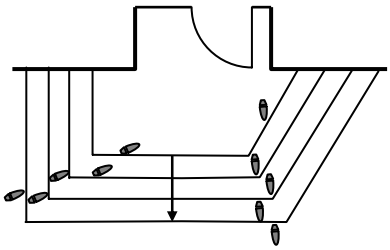 **NOT COMPLIANT**		1133B.4.5.3 ADAAG 4.9.2		

© 2003 DSA/OUD

Project designer (PD) shall address the following marked or circled items, and any additional plan review comments on drawings and specifications before scheduling a back check appointment for access compliance (AC). Any questions or points of disagreement must be resolved prior to back check by fax to plan reviewer (PR).

	Justification or Code Citation (C.C.R. Title 24, u.o.n.)	Location of Item on Plans	Comments Notes Examples

Check List 10. STAIRS AND STEPS

10.5 Stair nosing must comply with the following: — 1133B.4.5

1. 1/2” max radius of curvature at leading edge of tread.
2. Nosings that project beyond vertical risers must have the underside of the leading edge curved or beveled 60 degrees.
3. If not vertical, risers must slope under the tread at an angle of 60 degrees max from vertical.
4. Max projection of the nosing permitted is 1 1/2“.

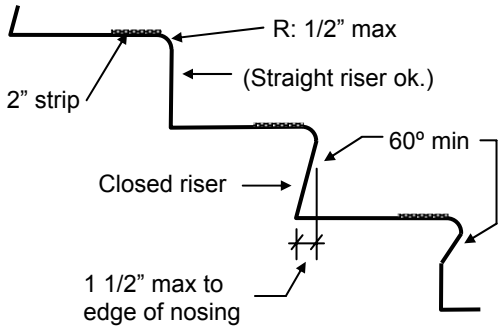

10.6 Provide detail of color contrasting striping at all stairs and steps within the pedestrian circulation area. Indicate the following: — 1133B.4.4

1. Upper approach and all treads of exterior stairs must have a 2” min wide strip of contrasting color.
2. Upper approach and lower tread of interior stairs must have a 2” min wide strip of contrasting color.
3. Color strip must be solid 2” and contrast must be 70% min.
4. Grooved stripes should not be used on exterior stairs.
5. The strip should be installed as close as possible to, but never more than 1” from, the edge of the nosing.
6. Recommendation: Provide strip on all treads of interior stairs.

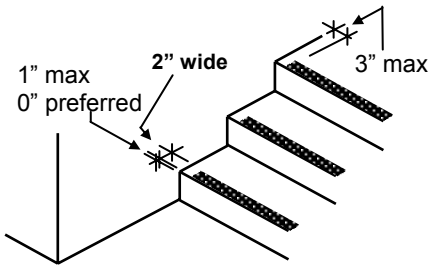

10.7 Provide and indicate width of stairway to be 44” min, or 36” min if serving an occupancy load of <50. — 1003.3.3.2

© 2003 DSA/OUD

Project designer (PD) shall address the following marked or circled items, and any additional plan review comments on drawings and specifications before scheduling a back check appointment for access compliance (AC). Any questions or points of disagreement must be resolved prior to back check by fax to plan reviewer (PR).

		Justification or Code Citation (C.C.R. Title 24, u.o.n.)	Location of Item on Plans	Comments Notes Examples
Check List 10. STAIRS AND STEPS				
EXCEPTION:				
a. Stairways adjacent to or serving an area of rescue assistance must be 48” min clear between handrails (60” preferred).		1114B.2.2.3 ADAAG 4.3.11.3		
10.8 Indicate top and bottom landing to be level and as long as stairway is wide.		1003.3.3.5		
EXCEPTION:				
a. Exterior landings may slope 2% max in any direction. b. At straight stair runs the landing may be 44” long. c. Provide additional space where landings serve as areas of rescue assistance.		1114B.2.2.2		
10.9 Increase stair landing dimensions to accommodate required maneuvering space for doors.		1133B.2.4.2		
10.10 Indicate clear headroom of 6’-8” min at stairs and landings.		1003.3.3.4		
10.11 Recommendation: If descending stair runs are located in the direct path of travel, provide a 24” wide grooved band on the top landing, 12” from and parallel to the riser edge.				NOTE: Grooves, 1/4" wide, 1/4" deep and 3/4" o.c. provide a meaningful contrast at this potentially hazardous condition.
10.12 Staircase underside creates a hazardous overhead obstruction. Provide cane detectable warning.		ADAAG Fig. 8 (c-1)		
10.13 Signage in stairways must be accessible. See **Checklist 17** for additional requirements.		1133B.4.3		
HANDRAILS FOR STAIRS				
10.14 Provide handrails on both sides of stairs including single steps.		**1003.3.3.6.1a DSA IR #96-10**		
EXCEPTION:				
a. In existing facilities: • stairs that are not within the specific area of alteration, and • stairs that are not part of the required primary path of travel.		**1133B.4.1.1**		

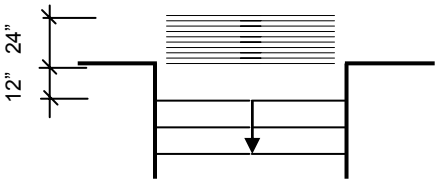

Project designer (PD) shall address the following marked or circled items, and any additional plan review comments on drawings and specifications before scheduling a back check appointment for access compliance (AC). Any questions or points of disagreement must be resolved prior to back check by fax to plan reviewer (PR).

Check List 10. STAIRS AND STEPS

		Justification or Code Citation (C.C.R. Title 24, u.o.n.)	Location of Item on Plans	Comments Notes Examples
10.15	Provide an intermediate handrail at stairs, required to be more than 88” wide.	**1003.3.3.6.1a**		NOTE: Stairs more than 88” wide, but not required by code to be that wide, such as monumental stairways, do not need an intermediate handrail.
10.16	Modify design to provide continuous handrails the full length of the stair run.			
10.17	Modify design to provide continuous inside handrails at intermediate landings.	**1133B.4.2.4**		
10.18	Top of gripping surface of handrail must be between 34” and 38” AFF.			
10.19	Recommendation: Handrails at facilities that primarily serve elementary school aged children should have additional handrails at 27” AFF. It is also recommended that the vertical clearance between handrails be at least 9” in order to reduce the risk of entrapment.	Tbl. 1115B-1 ADAAG A4.9.5		
10.20	Recommendation: Handrails at facilities that primarily serve kindergarten aged children should have additional handrails at 22” AFF.	Tbl. 1115B-1 ADAAG A4.9.5		
10.21	Indicate a specific height from front edge of nosing to top of handrail.			
10.22	Extend handrail 12” beyond the top of the stair run and parallel to the landing surface.	1133B.4.2.2 ADAAG 4.9.4(2)		
10.23	Extend handrail 12” plus the width of one tread beyond the bottom riser. The handrail must continue to slope for a distance of the width of one tread and the remainder of the extension must be parallel to the landing surface.			NOTE: Top and bottom handrail extensions are important safety features for people with balance problems. and must therefore extend in the direction of the stair run.

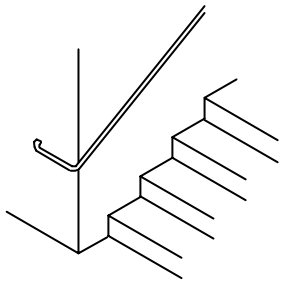

Not Compliant
Handrail at bottom of stairs does NOT extend one tread width plus 12 inches in the direction of the stair run.

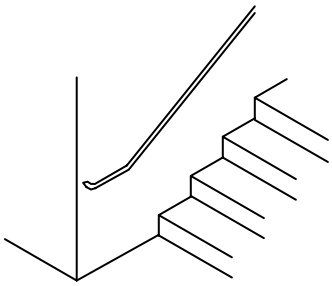

Compliant
Handrail at bottom of stairs does extend one tread width plus 12 inches in the direction of the stair run.

© 2003 DSA/OUD

Project designer (PD) shall address the following marked or circled items, and any additional plan review comments on drawings and specifications before scheduling a back check appointment for access compliance (AC). Any questions or points of disagreement must be resolved prior to back check by fax to plan reviewer (PR).

	Justification or Code Citation (C.C.R. Title 24, u.o.n.)	Location of Item on Plans	Comments Notes Examples

Check List 10. STAIRS AND STEPS

10.24 Handrail extension cannot extend into the required width of an adjacent path of travel. Relocate stairs or modify design. — 1133B.4.2.2

EXCEPTION:

a. In existing facilities, where DSA determines that compliance with the extension requirement would create an unreasonable hardship, because it would create a hazard or would be impossible due to plan configuration, an exception may be granted when equivalent facilitation is provided. — **ADAAG 4.1.6.(3)(b)**

10.25 Return ends of handrail extension to wall, floor or post. — 1133B.4.2.4

10.26 Provide cane detectable rail portion between 0.0” and 27” AFF if portion of rail that is more than 27” AFF protrudes more than 4” into a perpendicular running circulation path.

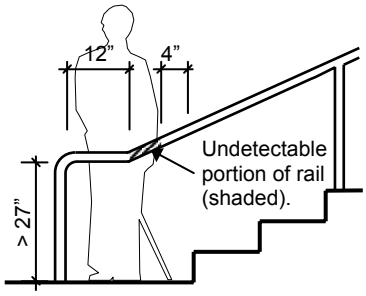

Not Compliant

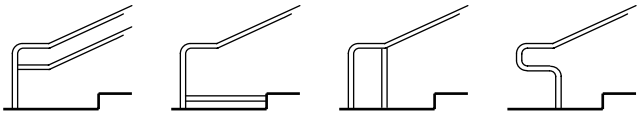

Compliant Designs

10.27 Indicate gripping portion between 1 1/4" and 1 1/2” diameter, or provide shape with equivalent gripping surface (i.e. 4”-6 1/4” perimeter, and 2 1/4" max in any direction).

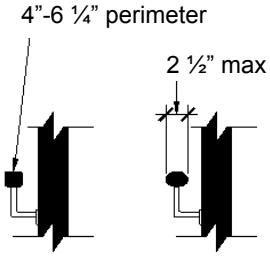

NOTE:
When using industry standard steel handrails (nominally dimensioned) DSA may approve an actual outside diameter of 1 7/8” max.

© 2003 DSA/OUD

10	Project designer (PD) shall address the following marked or circled items, and any additional plan review comments on drawings and specifications before scheduling a back check appointment for access compliance (AC). Any questions or points of disagreement must be resolved prior to back check by fax to plan reviewer (PR).		Justification or Code Citation (C.C.R. Title 24, u.o.n.)	Location of Item on Plans	Comments Notes Examples

Check List 10. STAIRS AND STEPS

10.28 All gripping surfaces must be smooth with no sharp edges, and continuous, without interruption by newel posts, other construction elements, or obstructions.

1133B.4.2.6.1
ADAAG 4.9.4

EXCEPTION:

a. Handrail brackets or balusters attached to the bottom surface of the handrail, provided that:

- not more than 20% of the handrail length is obstructed, and
- horizontal projections beyond the sides of the handrail occur 1 /12” min (2 1/2" preferred) below the bottom of the handrail, and
- all edges have a 1/8” min radius.

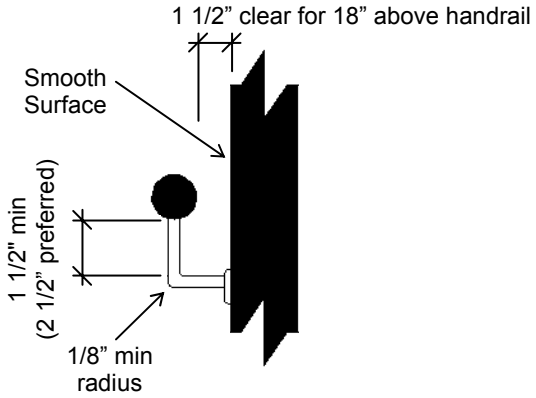

10.29 Provide and indicate 1 1/2” clearance from adjacent obstruction (wall or guardrail).

10.30 Modify recess to be 3” deep for 18” height, measured from the top of the handrail.

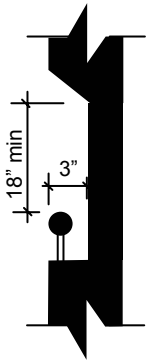

10.31 Handrail configuration creates hazard or trap. Modify.

10	Project designer (PD) shall address the following marked or circled items, and any additional plan review comments on drawings and specifications before scheduling a back check appointment for access compliance (AC). Any questions or points of disagreement must be resolved prior to back check by fax to plan reviewer (PR).		Justification or Code Citation (C.C.R. Title 24, u.o.n.)	Location of Item on Plans	Comments Notes Examples
	Check List 10. STAIRS AND STEPS				
10.32	Provide guardrail, 42” high, as a vertical barrier along the open edges of stairs, platform, or landings to prevent persons from falling off the open edge if drop exceeds 30”.		1133B.5.7.2		
10.33	Indicate that a sphere 4” in diameter cannot pass through any opening at guardrails (intermediate rails or an ornamental pattern.)		509.3		

© 2003 DSA/OUD

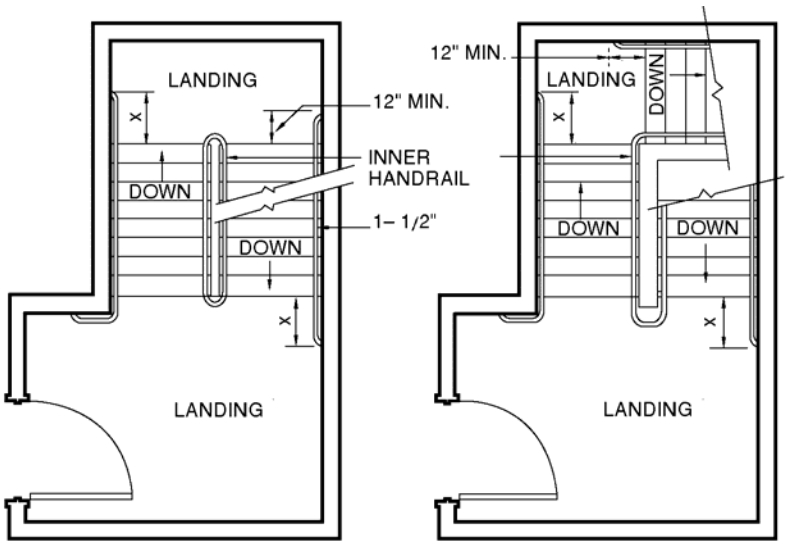

NOTE: INNER HANDRAIL AT LANDINGS OF STAIRS THAT DOUBLE BACK OR IMMEDIATELY TURN SHALL BE CONTI-NUOUS AND SHALL NOT EXTEND INTO LANDING OR PATH OF TRAVEL.

X: EXTENSON OF HANDRAIL SHALL BE EQUAL TO THE TREAD WIDTH PLUS 12 INCHES.

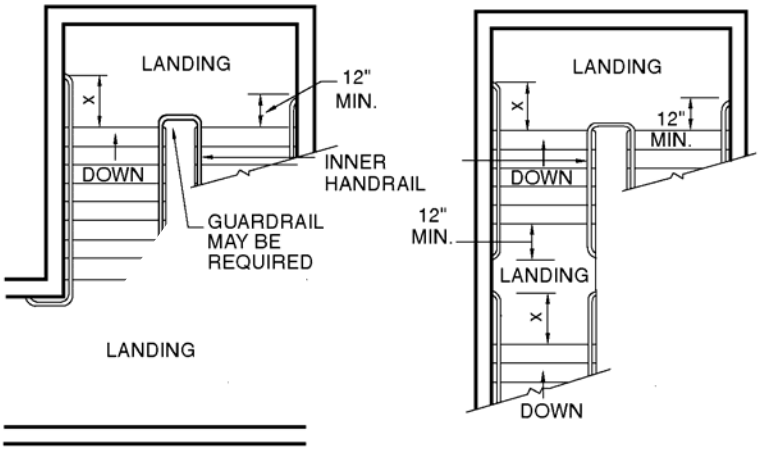

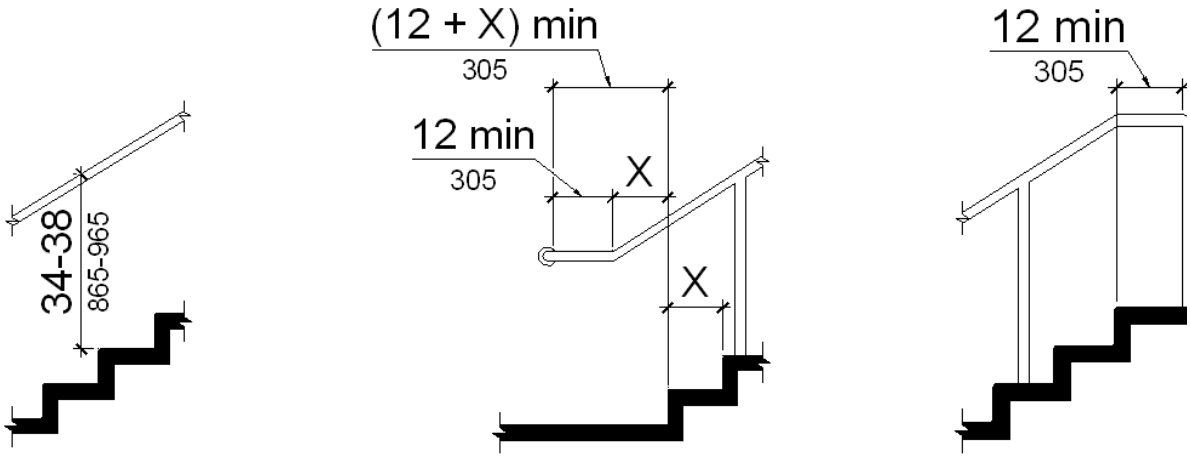

Fig 10-A. Requirements for Stairs and Stair Handrails

11	Project designer (PD) shall address the following marked or circled items, and any additional plan review comments on drawings and specifications before scheduling a back check appointment for access compliance (AC). Any questions or points of disagreement must be resolved prior to back check by fax to plan reviewer (PR).		Justification, Reference, or Code Citation (C.C.R. Title 24, u.o.n.)	Location of Item on Plans	Comments Notes Examples

Check List 11. ELEVATORS AND AREAS OF RESCUE ASSISTANCE

ELEVATORS					
11.1	For additional scoping requirements and exceptions see also applicable **DSA/AC Preliminary Review Checklists** and **Checklist 1.**				
11.2	Provide automatic passenger elevator to serve each level (including floors, stories, split levels, platforms, podiums, sunken areas, balconies, roof gardens, and mezzanines) in multi-story facility that is constructed by, on behalf of, or for the use of a public entity.		1103B.1 1114B.1.2 1120B.1 ADAAG 4.1.3(5) 28 CFR 35.151(a),(b)		H&S Code §19955.3: STORY means that portion of a building included between the upper surface of any floor and the upper surface of the floor next above, except that the topmost story shall be that portion of a building included between the upper surface of the topmost floor and the ceiling or roof above. If the finished floor level directly above a basement or unused under-floor space is more than six feet above grade for more than 50 percent of the total perimeter or is more than 12 feet above grade at any point, the basement or unused under-floor space shall be considered as a story. MEZZANINE means an intermediate floor placed in any story or room. When the total area of any "mezzanine floor" exceeds 33.3 % of the total floor area in that room, it shall be considered as constituting an additional "story".
	EXCEPTION:				
	a. Floors or portions of floors not customarily occupied, including, but not limited to, non-occupiable or employee spaces accessed only by ladders, catwalks, crawl spaces, very narrow passageways or freight (non-passenger) elevators, and frequented only by service personnel for repair or maintenance purposes: such spaces as elevator pits and elevator penthouses, piping and equipment catwalks and machinery rooms.				
	b. When an existing theater is subdivided into more than one facility having upper levels not accessible by ramp or elevator, and DSA determines that full compliance with this code would create an unreasonable hardship, upper levels need not be made accessible, provided all facilities at grade are accessible and any event, showing of motion pictures or other activities made available to the public in all of the facilities are scheduled to ensure that all such functions are available to the public in the accessible facility.		1104B.3.1.2		
	c. Ramps may be provided in lieu of elevators.				
	d. Special access wheelchair lifts may be approved by DSA between levels in lieu of passenger elevators (see **Checklist 12** for wheelchair lift requirements).		1116B.2		
	e. In existing buildings, other than dining banquet and bar facilities, when DSA determines that compliance would create an unreasonable hardship, an exception may be granted when equivalent facilitation is provided.		1120B.1.1		
	f. In existing dining, banquet and bar facilities, when DSA determines that compliance would create an unreasonable hardship, an exception may be granted provided that a minimum of 75 percent of the dining, banquet and bar is on a common level throughout or connected by pedestrian ramps, passenger elevators or special lifts.		1120B.1.2		
	g. In existing buildings, when legal or physical constraints would not allow compliance with this section or equivalent facilitation without creating an unreasonable hardship		1120B.1.3		NOTE: Jurisdictional findings and determinations for exception (g) are subject to an internal DSA appeals process.
	h. In private facilities, that are less than three stories or that have less than 3,000 SqFt per story unless the building is a shopping center, a shopping mall, or the professional office of a health care provider.				NOTE: Exception (h) does not apply to privately funded facilities that are intended for use by a public entity.
11.3	Indicate compliance of existing elevator and provide DSA application number.				

© 2003 DSA/OUD

11	Project designer (PD) shall address the following marked or circled items, and any additional plan review comments on drawings and specifications before scheduling a back check appointment for access compliance (AC). Any questions or points of disagreement must be resolved prior to back check by fax to plan reviewer (PR).		Justification, Reference, or Code Citation (C.C.R. Title 24, u.o.n.)	Location of Item on Plans	Comments Notes Examples

Check List 11. ELEVATORS AND AREAS OF RESCUE ASSISTANCE

11.4	Indicate location of all elevators on each site and floor plan with an appropriate symbol (X).				
11.5	Where more than one elevator is provided, all elevators must be made accessible.		1114B.1.2		
11.6	Freight elevators are not considered as meeting the requirements unless the only elevators provided are used as combination passenger and freight elevators for the public and employees.		ADAAG 4.10.1		
11.7	In new construction of buildings where elevators are required, and which exceed 10,000 square feet on any floor, accessible means of vertical access shall be provided within 200 feet of each stairs (except stairs solely used for emergency egress) and each escalator.		1103B.1		
11.8	In existing buildings where elevators are required, and which exceed 10,000 square feet on any floor, and where newly constructed means of vertical access is provided via stairs or escalator, an accessible means of vertical access shall be provided within 200 feet of each new stairs (except stairs solely used for emergency egress) or escalator.		1103B.1		
11.9	Provide additional elevator stop at inaccessible level.				
11.10	Indicate height of call button in elevator lobby or hall to be 42” nominal AFF.		1116B.1.13 ADAAG 4.10.3		
11.11	Indicate call button to be 3/4" min in the smallest dimension, and either to be raised or flush.				
11.12	Indicate visual hall lantern fixtures to be 72” o.c. AFF, 2 1/2" min in the smallest dimension, and visible from the vicinity of the hall call button.				
11.13	Provide and indicate raised character and Braille floor designations on both jambs of each elevator.				

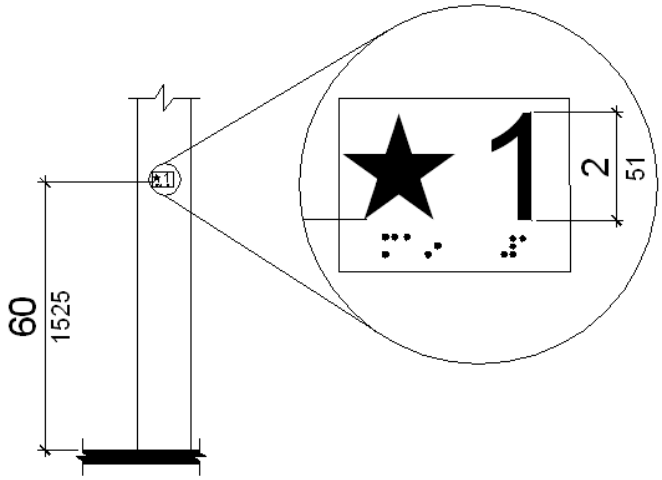

Project designer (PD) shall address the following marked or circled items, and any additional plan review comments on drawings and specifications before scheduling a back check appointment for access compliance (AC). Any questions or points of disagreement must be resolved prior to back check by fax to plan reviewer (PR).

	Justification, Reference, or Code Citation (C.C.R. Title 24, u.o.n.)	Location of Item on Plans	Comments Notes Examples

Check List 11. ELEVATORS AND AREAS OF RESCUE ASSISTANCE

11.14	Indicate clearance between the car platform sill and the edge of the hoistway landing to be no greater than 1 1/4".			
11.15	Indicate clear door opening width to be 36” min. EXCEPTION: a. When approved by DSA, the minimum door width may be reduced to 32” for cars with dimensions per 3003.4.7.		1116B.1.4	
11.16	Indicate height of door re-opening sensors at 5” and 29” AFF.			
11.17	Indicate interior dimensions for elevator cab with 36” wide side-slide opening doors to be 68” min wide, and 54” min deep between the back wall and the elevator door, and 51” min deep between the back wall and the return panel. 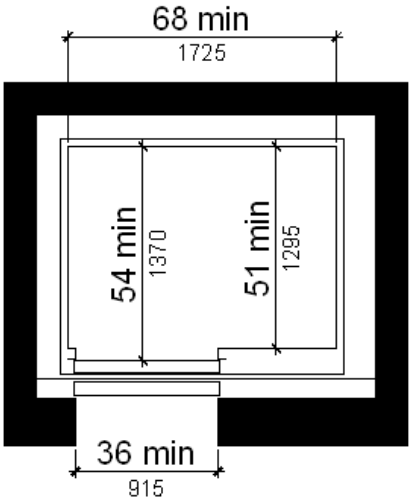 		1116B.1.8 Fig 40-A (Fig. 11A-A)	
11.18	Indicate interior dimensions for elevator cab with 42” wide center-opening doors to be 80” min wide, and 54” min deep between the back wall and the elevator door, and 51” min deep between the back wall and the return panel. 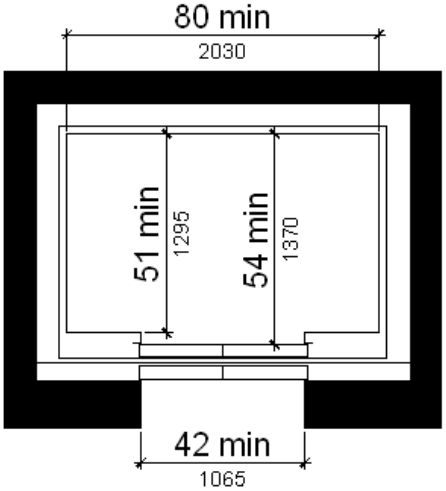 			DSA may approve other configurations and dimensions if it is clearly shown that the floor area of the elevator car provides space for wheelchair users to enter the car, turn around, maneuver within reach of controls, and exit from the car.

© 2003 DSA/OUD

11	Project designer (PD) shall address the following marked or circled items, and any additional plan review comments on drawings and specifications before scheduling a back check appointment for access compliance (AC). Any questions or points of disagreement must be resolved prior to back check by fax to plan reviewer (PR).		Justification, Reference, or Code Citation (C.C.R. Title 24, u.o.n.)	Location of Item on Plans	Comments Notes Examples

Check List 11. ELEVATORS AND AREAS OF RESCUE ASSISTANCE

11.19	Provide and indicate at least one (1) handrail at 32" AFF and 1 1/2" from the wall.		1116B.1.11		
11.20	The highest operable part of a two-way emergency intercom system must be 48” max AFF (40” preferred). The device must be identified by tactile characters located adjacent to the device. If the system uses a handset, the cord from the panel to the handset must be 29” min long. The car emergency signaling device cannot be limited to voice communication. If instructions for use are provided, essential information must be presented in both tactile and visual form.				
11.21	Indicate centerlines AFF of highest and lowest elevator floor buttons (inside car) to be within 48” and 35” for front approach and 54” and 35” for side approach.		1116B.1.8		
11.22	Emergency controls, including the emergency stop and alarm, must be grouped in or adjacent to the bottom of the panel and must be 35” min AFF.				

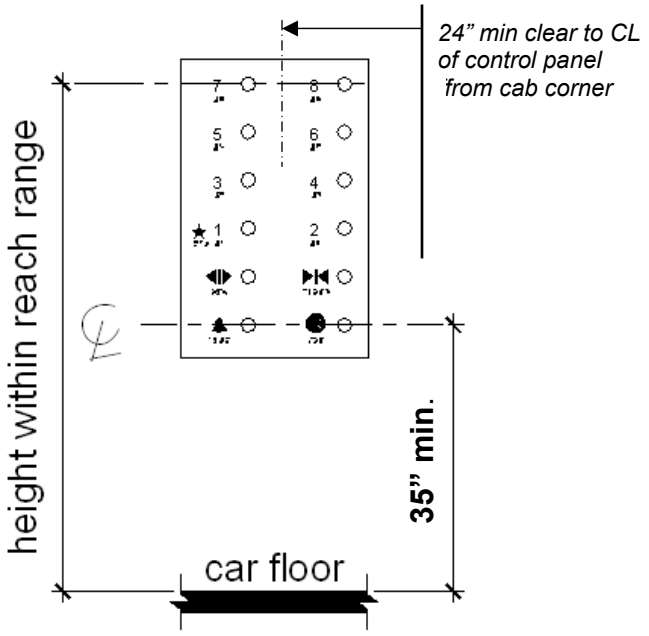

11.23	Indicate on an enlarged detail elevator car control buttons to be: **1.** At least 3/4" in their smallest dimension and illuminated. **2.** Raised 1/8” +/- 1/32” above the surrounding surface and have square shoulders. **3.** Designated by a 5/8” min raised, white on a black background Arabic numeral, standard alphabet character, or standard symbol immediately to the left of the control button.		1116B.1.9		

© 2003 DSA/OUD

Project designer (PD) shall address the following marked or circled items, and any additional plan review comments on drawings and specifications before scheduling a back check appointment for access compliance (AC). Any questions or points of disagreement must be resolved prior to back check by fax to plan reviewer (PR).

	Justification, Reference, or Code Citation (C.C.R. Title 24, u.o.n.)	Location of Item on Plans	Comments Notes Examples

Check List 11. ELEVATORS AND AREAS OF RESCUE ASSISTANCE

4. Have a California Braille symbol, located immediately below the numeral, character or symbol.

5. Have a minimum clear space of 3/8" or other suitable means of separation shall be provided between rows of control buttons.

AREAS OF RESCUE ASSISTANCE

11.24 Provide area of rescue assistance in building or portion of building required to be accessible, when an exit required by Chapter 10 is not accessible. — 1114B.2.1

EXCEPTION: (does not relief from the requirement to provide accessible exits or enclosures)

a. In buildings or facilities having a supervised automatic sprinkler system.
b. In alterations of existing buildings.

11.25 If applicable, indicate on cover sheet or in code analysis that sprinkler system is supervised.

11.26 Area of rescue assistance must adjoin an accessible route of travel.

11.27 Provide, and indicate on plan, at least two 30"x48" spaces at each area of rescue assistance. — 1114B.2.2.2

11.28 30"x48" spaces cannot encroach on any required exit width, including door swings and required stair landing dimensions.

11.29 Provide at least one 30"x48" space on each story for every 200 persons of calculated occupant load served by the area for evacuation assistance, but never less than two at each area of rescue assistance.

EXCEPTION:

a. DSA may reduce the minimum number of 30"x48" spaces to one for each area for evacuation assistance on floors where the occupant load is less than 200.

11.30 If applicable, indicate on cover sheet, plan, or in code analysis occupancy load for each story.

11.31 Stairs adjacent to, or serving areas of rescue assistance must provide 48" clear width between handrails or any other protrusion. — 1114B.2.2.3

11.32 Provide a two-way emergency communication system with both visible and audible communication for use by the fire department or rescue crews at or near a primary entrance to the facility. A button shall activate both a light at the primary entrance and a light in the area of rescue assistance indicating — 1114B.2.2.4

© 2003 DSA/OUD

Project designer (PD) shall address the following marked or circled items, and any additional plan review comments on drawings and specifications before scheduling a back check appointment for access compliance (AC). Any questions or points of disagreement must be resolved prior to back check by fax to plan reviewer (PR).

		Justification, Reference, or Code Citation (C.C.R. Title 24, u.o.n.)	Location of Item on Plans	Comments Notes Examples
Check List 11. ELEVATORS AND AREAS OF RESCUE ASSISTANCE				
that the request has been received. (The fire department may approve a location other than the primary entry.)				
11.33 Provide a two-way emergency communication system with both visible and audible communication at each area of rescue assistance and indicate the location and height of operable parts.				
11.34 Provide a sign which states AREA FOR EVACUATION ASSISTANCE (Brailled and raised) and the international symbol of accessibility adjacent to the door leading to the area. Provide an additional illuminated sign when exit sign illumination is required.				
11.35 Provide a sign with instructions in each area of rescue assistance to include:				
1. Directions to other means of egress.				
2. Advice that persons able to use the exit stairs do so as soon as possible unless they are assisting others.				
3. Information on planned availability of assistance in the use of stairs or supervised operation of elevators and how to summon such assistance.				
4. Directions for use of emergency communications system.				
11.36 See 1114B.2.for area for evacuation assistance alternatives in high–rise buildings.				
11.37 Indicate construction and location of area of rescue assistance to comply with one of the following:		1114B.2.2.1		
1. A portion of a stairway landing within a smoke proof enclosure complying with local requirements.				
2. A portion of an exterior balcony located immediately adjacent to an exit stairway complying with local requirements for exterior balconies. Openings to the exterior of the building located within 20’ of the area of rescue assistance shall be protected with 3/4-hour fire protection assemblies.				
3. A portion of a one-hour fire resistive corridor or vestibule (complying with local requirements for fire resistive construction and opening protection) located immediately adjacent to an exit enclosure.				
4. A portion of a stairway landing within an exit enclosure which is vented to the exterior and is separated from the interior of the building shall have no less than one-hour fire resistive doors.				
5. An area or a room shall be separated from other portions of the buildings by a smoke barrier. To comply, a smoke barrier shall have a fire resistive rating of no less than one-hour and shall completely enclose the area or room. Doors in the smoke barrier shall be tight fitting smoke-and-draft. Control assemblies shall having a fire protection rating of				

© 2003 DSA/OUD

Project designer (PD) shall address the following marked or circled items, and any additional plan review comments on drawings and specifications before scheduling a back check appointment for access compliance (AC). Any questions or points of disagreement must be resolved prior to back check by fax to plan reviewer (PR).

	Justification, Reference, or Code Citation (C.C.R. Title 24, u.o.n.)	Location of Item on Plans	Comments Notes Examples

Check List 11. ELEVATORS AND AREAS OF RESCUE ASSISTANCE

no less than 20 minutes and shall be self-closing or automatic closing. The area or room shall be provided with an exit directly into an exit enclosure. When the room or area exits into an exit enclosure, which is required to be of more than one-hour fire - resistive construction, the room or area shall have the same fire resistive construction.

6. An elevator lobby with elevator shafts and adjacent lobbies are pressurized as required for smoke-proof enclosures by local regulations. Such pressurized systems shall be activated by smoke detectors on each floor in a manner approved by the local authority. Pressurization equipment and its ductwork within the building shall be separated from other portions of the building by a minimum two-hour fire resistive construction.

© 2003 DSA/OUD

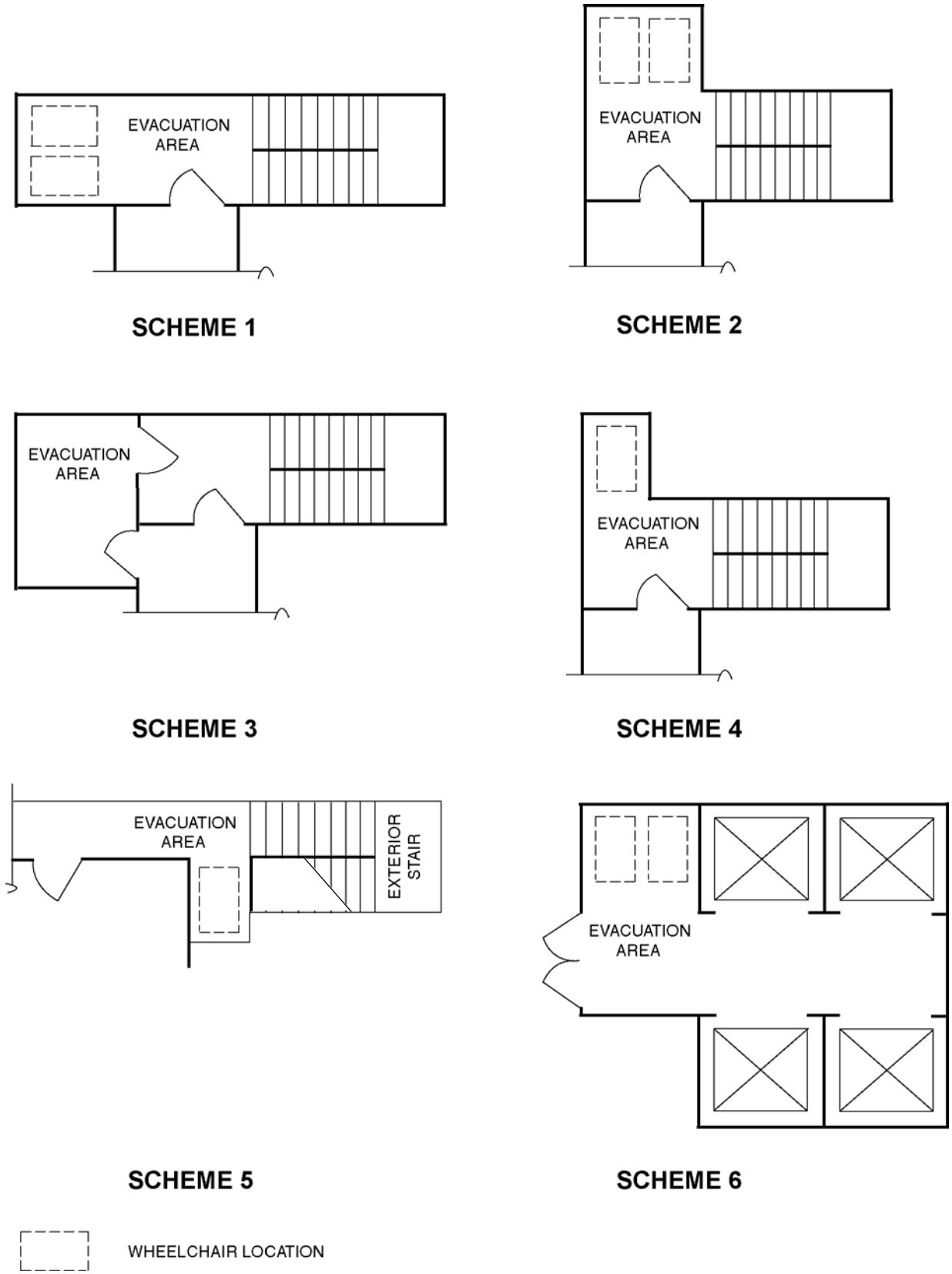

Fig 11-A. Evacuation Assistance Areas

12	Project designer (PD) shall address the following marked or circled items, and any additional plan review comments on drawings and specifications before scheduling a back check appointment for access compliance (AC). Any questions or points of disagreement must be resolved prior to back check by fax to plan reviewer (PR).		Justification, Reference, or Code Citation (C.C.R. Title 24, u.o.n.)	Location of Item on Plans	Comments Notes Examples
	Check List 12. WHEELCHAIR LIFTS				
12.1	For additional scoping requirements and exceptions, see also applicable **DSA/AC Preliminary Review Checklists** and **Checklist 1.**				
12.2	Platform lifts (wheelchair lifts) may be used in lieu of an elevator or ramp only under the following conditions: **1.** In new construction, to provide an accessible route to a performing area in an assembly use area or to a speaking area or similar place (such as a dais for "head table") in an assembly or Group B use area. **2.** In new construction, to comply with the wheelchair viewing position line-of- sight and dispersion requirements of 1104B.3.5. **3.** In new construction, to provide access to incidental occupiable spaces and rooms which are not open to the general public and which house no more than five persons, including but not limited to equipment control rooms and projection booths. **4.** In new construction, to provide access where existing site constraints or other constraints make use of a ramp or an elevator infeasible. **5.** In alteration projects, to comply with the accessible path of travel requirement.		1116B.2 ADAAG 4.1.3(5).4		NOTE: Speaking areas and similar places may include raised judges' benches, clerks' stations, speakers' platforms, jury boxes and witness stands or to depressed areas such as the well of a court.
12.3	Wheelchair lift must be permanently installed. EXCEPTION: a. In alteration projects, a portable wheelchair lift may be approved as equivalent facilitation by DSA if the installation of a fixed lift would be impossible to accomplish (e.g., at telescoping, foldable performing or seating areas).				
12.4	Indicate compliance of existing, unaltered wheelchair lift with Sections 1116B.2, 1116B.3 and 7-3094.1, and provide DSA application number.		Title 24, Part 7, Section 3094.1		
12.5	Indicate location of all lifts on each site and floor plan.				
12.6	Lift must be located in close proximity of the path of travel that is used by the general public.				
12.7	Lift cannot be used as a component of an exit component in an egress system. EXCEPTION: a. The building has a supervised automatic sprinkler system. b. The area served by lift does not serve more than 4 wheelchair spaces. c. The length of the common POT to a point where the occupant has a choice of two directions to an exit shall not exceed 30 (including the vertical travel distance of the lift).		1116B.3		

Project designer (PD) shall address the following marked or circled items, and any additional plan review comments on drawings and specifications before scheduling a back check appointment for access compliance (AC). Any questions or points of disagreement must be resolved prior to back check by fax to plan reviewer (PR).

	Justification, Reference, or Code Citation (C.C.R. Title 24, u.o.n.)	Location of Item on Plans	Comments Notes Examples

Check List 12. WHEELCHAIR LIFTS

d. The lift is provided with standby power or self-recharging battery power for a minimum of 5 upward and downward trips.

12.8 Indicate stage curtain location (existing or future, in the open or stored position), and coordinate location with clear landing.

12.9 Unenclosed lift cannot rise more than 60” in height. — 7-3094.2.(c)

12.10 If interior stairs are provided to access different levels, the lift should not be located in such a manner that a person using a wheelchair must exit the building and re-enter at another point in order to use the lift.

12.11 In new construction, and wherever possible in alteration projects, a wheelchair lift being used to gain access onto podiums and stages should be located out of view from the auditorium together with the stairs.

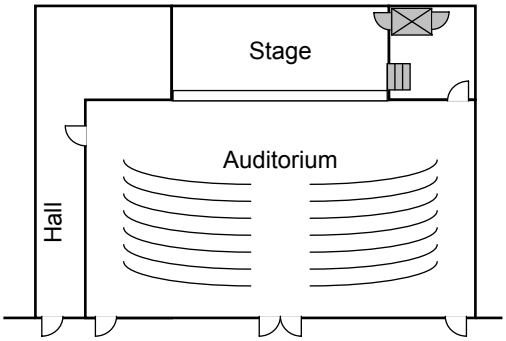

Compliant
Equal access onto the stage is achieved by providing similar approaches to wheelchair lift and staircase through enclosed side-stage.

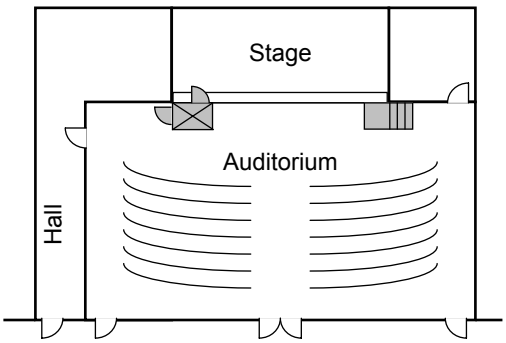

Not Compliant
Operation of wheelchair lift is within view of the auditorium, making it awkward for people in wheelchair to use.

© 2003 DSA/OUD

Project designer (PD) shall address the following marked or circled items, and any additional plan review comments on drawings and specifications before scheduling a back check appointment for access compliance (AC). Any questions or points of disagreement must be resolved prior to back check by fax to plan reviewer (PR).

	Justification, Reference, or Code Citation (C.C.R. Title 24, u.o.n.)	Location of Item on Plans	Comments Notes Examples

Check List 12. WHEELCHAIR LIFTS

12.12 Shown design does not facilitate unassisted entry, operation, or exit from the lift. Modify.

12.13 In new construction, and wherever possible in alteration projects, indicate a 60” square clear landing at each level. — 7-3094.3.j(4)

12.14 Indicate locations of call buttons at top and bottom landings: — 7-3094.2(c)3

1. Within reach range of the required 30”x48” clear space and at 36” AFF.
2. Within line sight of the platform.
3. The 30”x48” must be outside any door swing.
4. Lower landing controls to be 24” min from any moving parts of the platform and runway.

12.15 Indicate location of controls in platform:

1. Within reach range of the required 30”x48” clear space for up and down travel, and at 36” AFF.

NOTE:
See also DSA IRs #98-01 and #95-05 for additional requirements.

12.16 At vertical platform lifts, indicate 36”x48” (36”x51” preferred) clear lift platform for straight through access.

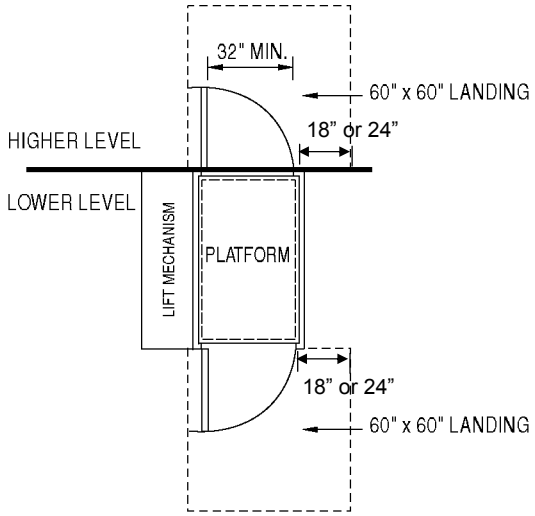

(Provide enclosure panel at upper level edge were needed)

© 2003 DSA/OUD

Project designer (PD) shall address the following marked or circled items, and any additional plan review comments on drawings and specifications before scheduling a back check appointment for access compliance (AC). Any questions or points of disagreement must be resolved prior to back check by fax to plan reviewer (PR).

	Justification, Reference, or Code Citation (C.C.R. Title 24, u.o.n.)	Location of Item on Plans	Comments Notes Examples

Check List 12. WHEELCHAIR LIFTS

12.17 Lift involving 90 degree turn: platform size shall have a width of 42” min and a length of 53” min”. When the width is 42”, the length shall be 60”. As the width increases, the length may decrease by the same amount. The door opening at the long side must be 42” min clear.

7-3094.2(p)
DSA IRs
#98-01 and
#95-05

Configurations for 90° Platform Lift	
Width	**Length**
42”	60”
43”	59”
44”	58”
45”	57”
46”	56”
47”	55”
48”	54”
49”	53”

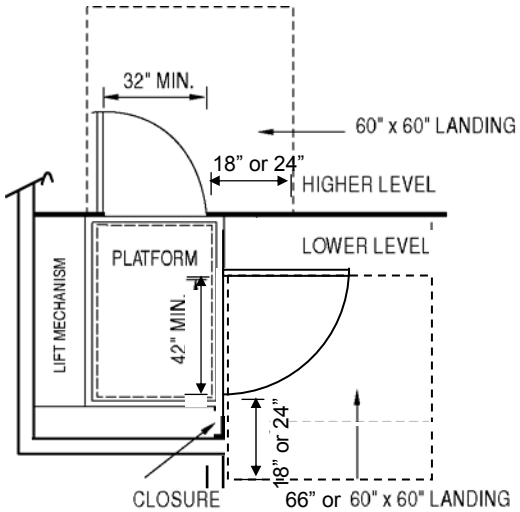

12.18 At lower landing, provide pit for flush access into platform or a level landing at the same height as the platform with a ramp or flared sides at 8.3% max.

12.19 If ramp or flared sides are provided, indicate configuration on plan. Ramp must be permanently installed, with slope at 8.3% max, have a 48” min long landing at the bottom of the ramp, and must be so located that a person in a wheelchair can open the bottom gate independently.

1116B.2.4.1
1133B.5.4.3
1003.3.4.4

EXCEPTION:

a. A landing at the bottom gate may be omitted if the gate is equipped with a power-operated opener (indicate location of control push-plate).

12.20 If pit is used, indicate pit depth to be 4” max, and provide a contrasting stripe around the pit area.

7-3094.2(c)4

12.21 Provide safety pan cover and automatic emergency shut off.

12.22 Provide signs with lettering on a contrasting background, conspicuously posted at each landing indicating the following:

1. The international symbol of accessibility.
2. The lift shall not be used to transport materials or equipment.
3. The lift capacity (specify max weight).
4. The telephone number to call in case of emergency.

© 2003 DSA/OUD

12	Project designer (PD) shall address the following marked or circled items, and any additional plan review comments on drawings and specifications before scheduling a back check appointment for access compliance (AC). Any questions or points of disagreement must be resolved prior to back check by fax to plan reviewer (PR).		Justification, Reference, or Code Citation (C.C.R. Title 24, u.o.n.)	Location of Item on Plans	Comments Notes Examples
	Check List 12. WHEELCHAIR LIFTS				
12.23	Provide signage to indicate location of lift, if lift is not visible from room.				
12.24	Indicate landing and lift gates to be 42” high.				
12.25	Gates have to comply with all applicable requirements for doors, with the exception of the overall dimensions of the landings inside the lift platform.		DSA IR #98-01		
12.26	Provide emergency backup power (e.g., self-recharging battery or standby building power sufficient for 5 upward and downward trips) to exit from platform, or provide alternate emergency ramp exit.				
12.27	Indicate smooth and solid platform enclosure.				
12.28	Provide and indicate a remote disconnect location.				
12.29	Indicate a light source that will provide 5 ft candles of light over platform if using platforms that are fully enclosed.		7-3094.2(f)		
12.30	Where lift area is not constantly supervised, provide remote alarm or a tow-way communication system (audio-visual). Indicate location of both stations.				
12.31	Bring manufacturers cut sheets for back-check.				
12.32	Indicate speed and controls in specs.				
12.33	For inclined platform wheelchair lifts see Sections 7-3094.3 of Part 7, of Title 24.				
12.34	For special access elevators (Article 15/LuLa) see Sections 7-3093 through 7-3093.60 of Part 7, of Title 24.		DSA IR #95-05		

© 2003 DSA/OUD

13	Project designer (PD) shall address the following marked or circled items, and any additional plan review comments on drawings and specifications before scheduling a back check appointment for access compliance (AC). Any questions or points of disagreement must be resolved prior to back check by fax to plan reviewer (PR).		Justification, Reference, or Code Citation (C.C.R. Title 24, u.o.n.)	Location of Item on Plans	Comments Notes Examples

Check List 13. PUBLIC TELEPHONES

13.1 For additional scoping requirements and exceptions see also applicable **DSA/AC Preliminary Review Checklists** and **Checklist 1.**

13.2 Indicate number and location of all public pay telephones, public closed circuit telephones, or other public telephones on each site and floor plan.

NOTE:
Closed Circuit Telephones are telephones with dedicated lines such as a house phone, courtesy phone or phone that must be used to gain entrance to a facility

13.3 Indicate compliance status of all telephones included in this project (i.e. those that are to be newly constructed or altered, or part of the required POT) and provide DSA application number.

13.4 Indicate POT to accessible telephone (dashed line) and show 30”x48” clear space.

13.5 Provide and indicate interior and exterior accessible public pay telephones, public closed circuit telephones, or other public telephones in compliance with the following table:

1117B.2.1
ADAAG
4.1.3(17)(a)

NOTE:
To be considered within the same distinctive area, no two telephones should be more than 200 ft apart from each other or have a level difference of more than 30” in height , and be visible from each another’s location (measured along the POT.)

Number of each type of telephone provided on each floor, or within distinctive exterior area.	Number of telephones required to be accessible (excluding TTY requirement).
1 or more single unit.	1 or at least 50% of telephones.
1 bank.	1 or at least 50% of telephones.
2 or more banks.	1 per bank. At least 1 per floor must provide front approach.

A bank is two or more adjacent telephones.

13.6 Recommendation: All designated accessible telephones should allow front and parallel approach.

13.7 Provide additional maneuvering space at alcove (indicate dimensions).

1117B.2.4
Fig 11B-5A

13.8 Provide enlarged side and front elevation, indicating height of operable parts, knee clearance, and location of required signage.

13.9 Provide cane detectable warning at telephone that protrudes into pedestrian circulation area.

1117B.2.7.4
1133B.8.6

13.10 Provide and indicate provision of volume control at all accessible telephones (12 dBA min and 18 dBA max above normal). In addition, equip 25%, but never less than one, of all other public telephones with a volume control and disperse them among all types of public telephones, including closed circuit telephones, throughout the building or facility.

1117B.2.8
ADAAG
4.1.3(17)(b)

13.11 Provide and indicate at least one text telephone (TTY) where 4 or more public pay telephones (including both interior and exterior telephones) are provided at a site. The TTY must be

1117B.2.9.1

© 2003 DSA/OUD

Project designer (PD) shall address the following marked or circled items, and any additional plan review comments on drawings and specifications before scheduling a back check appointment for access compliance (AC). Any questions or points of disagreement must be resolved prior to back check by fax to plan reviewer (PR).

Check List 13. PUBLIC TELEPHONES

		Justification, Reference, or Code Citation (C.C.R. Title 24, u.o.n.)	Location of Item on Plans	Comments Notes Examples
	located on the inside in a public use area if at least one of the total is inside.			
13.12	Provide and indicate a text telephone (TTY) where at least one interior public pay telephone is located in a facility that is a stadium or arena, a convention center, a hotel with a convention center, or a covered mall.			
13.13	Provide and indicate a text telephone (TTY) where at least one public pay telephone is located in or adjacent to a hospital emergency room, hospital recovery room, or hospital waiting room.			
13.14	Provide and indicate a text telephone (TTY) where at least one public pay telephone is located in the secured area of a detention or correctional facility subject to section.	ADAAG 4.1.3(17)(c)(iv)		
13.15	Provide and indicate a text telephone in areas where a text telephone relay service is unavailable.	28 CFR 35.161		
13.16	Provide and indicate a text telephone in facilities used by entities that provide emergency services, including 911 services.	28 CFR 35.162		
13.17	Provide and indicate shelf and electrical outlet for portable TTY.	1117B.2.9.2.2		
13.18	Provide and indicate the following signage at accessible telephones:	ADAAG 4.30.7		
	1 ISA at all accessible telephones.			
	2 Telephone handset with radiating sound waves at all telephones with volume controls.			
	3 International TTY symbol at all text telephones.			
	4 Directional signage adjacent to all banks of telephones which do not contain a text telephone indicating the location of the nearest text telephone (TTY). Include the international TTY symbol. If a facility has no banks of telephones, the directional signage shall be provided at the entrance (e.g., in a building directory).			

1

2

3 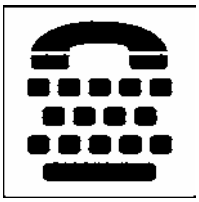

4 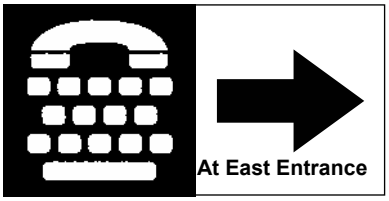

© 2003 DSA/OUD

Project designer (PD) shall address the following marked or circled items, and any additional plan review comments on drawings and specifications before scheduling a back check appointment for access compliance (AC). Any questions or points of disagreement must be resolved prior to back check by fax to plan reviewer (PR).

	Justification, Reference, or Code Citation (C.C.R. Title 24, u.o.n.)	Location of Item on Plans	Comments Notes Examples

Check List 13. PUBLIC TELEPHONES

5 Indicate location of signs to be high enough to be seen even when others are using the telephone. Size signs so that they can be seen from a distance.

13.19 Telephone book, if provided, must be located at a position within reachable range.

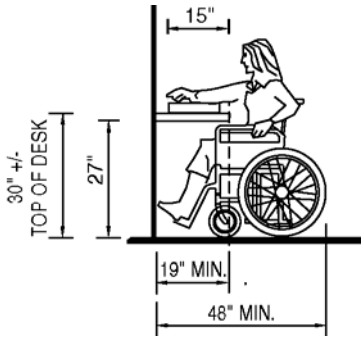

13.20 In large projects with many telephone units or banks, provide ratio table, indicating total units, accessible units, volume control units, and TTY units for each floor/area.

© 2003 DSA/OUD

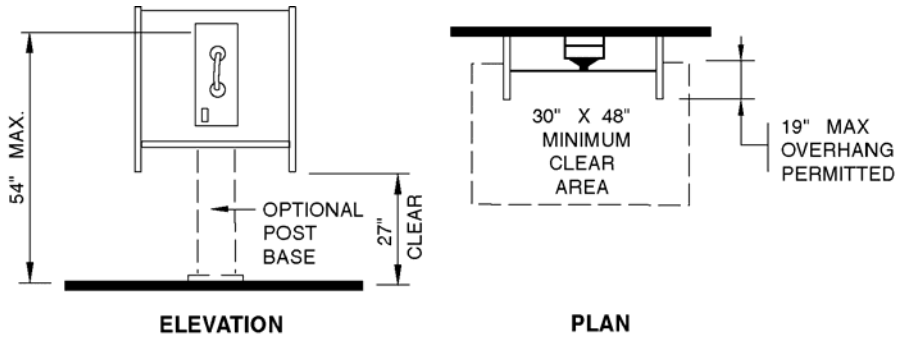

ELEVATION PLAN

SIDE REACH ARRANGEMENT

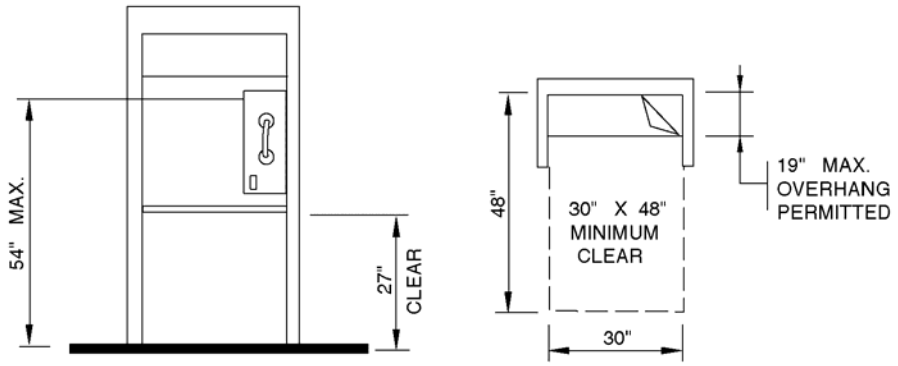

ELEVATION PLAN

FULL HEIGHT ENCLOSURE

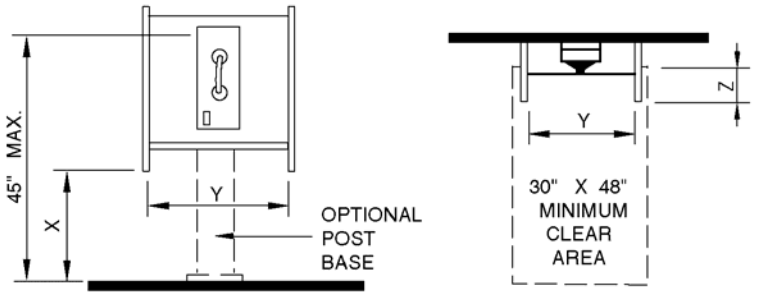

NOTE: IF **Y** IS LESS THAN 30 INCHES, THEN **X** SHALL BE GREATER THAN 27 INCHES.

NOTE: IF **Z** IS GREATER THAN 12 INCHES, THEN **Y** SHALL BE GREATER THAN 30 INCHES.

ELEVATION PLAN

FORWARD REACH ARRANGEMENT

Fig 13-A Telephone Approaches and Reach Ranges

14	Project designer (PD) shall address the following marked or circled items, and any additional plan review comments on drawings and specifications before scheduling a back check appointment for access compliance (AC). Any questions or points of disagreement must be resolved prior to back check by fax to plan reviewer (PR).		Justification, Reference, or Code Citation (C.C.R. Title 24, u.o.n.)	Location of Item on Plans	Comments Notes Examples
	Check List 14. DRINKING FOUNTAINS				
14.1	For additional scoping requirements and exceptions see also applicable **DSA/AC Preliminary Review Checklists** and **Checklist 1.**				
14.2	Indicate location and user type of all interior and exterior drinking fountains (DFs) on each site and floor plan.				
14.3	Indicate compliance status of all DFs included in this project (i.e. those that are to be newly constructed or altered, or part of the required POT) and provide DSA application number.				
14.4	Indicate POT to accessible DFs (dashed line) and show 30”x48” clear space.		ADAAG 4.1.3(10)(b)		
14.5	Provide and indicate “hi-low” combination DF in new construction where only one drinking fountain area is provided per floor.		1117B.1.1		NOTE: “Hi-low” drinking fountains provide access to individuals who use wheelchairs and to those who have difficulty bending or stooping. However, this can also be achieved by providing one wheelchair accessible DF and one at a standard height convenient for those who have difficulty bending.
14.6	Provide and indicate “hi-low” combination DF in alteration projects if DF is part of the alteration and where only one drinking fountain area is provided per floor.		1134B.2		
14.7	Provide and indicate “hi-low” combination DF in alteration projects if DF serves the area of alteration and where only one drinking fountain area is provided per floor.		1134B.2.1 ADAAG 4.1.6(2)		
14.8	Provide and indicate 50% of wheelchair accessible DFs and directional signage at drinking fountains that are not wheelchair accessible.				
14.9	When exterior DFs are provided, indicate “hi-low” combination, or one wheelchair accessible DF and one DF at standard height within immediate proximity.				
14.10	All DFs must be located in alcoves.		1117B.1.2		
	EXCEPTION:				
	a. When DSA determines unreasonable hardship to locate the DF in an alcove, the DF may project into the circulation path, if the DF is made identifiable to the blind as follows:				
	▪ Provide truncated domes (contrasting in texture, and color) on floor surface under DF and extend the warning surface from the back wall the to 12” beyond the front edge of the DF and 12” beyond each side of the DF, or		Fig 11B-3(b)		When truncated domes are planed, the PD must include a written request for finding of unreasonable hardship at the time of plan submittal.
	▪ Provide wing walls or cane-detectable rails on each side of the DF. The wings must project out from the supporting wall at least as far as the DF to within 6” of the surface of the circulation path, but cannot reduce the required clear width of the adjacent route.				
14.11	Provide alcove dimensions:		1117B.1.2		
	1 32” min wide and 18” min deep.				
	2 36” min wide, if alcove is deeper than 24”.				

© 2003 DSA/OUD

Project designer (PD) shall address the following marked or circled items, and any additional plan review comments on drawings and specifications before scheduling a back check appointment for access compliance (AC). Any questions or points of disagreement must be resolved prior to back check by fax to plan reviewer (PR).

	Justification, Reference, or Code Citation (C.C.R. Title 24, u.o.n.)	Location of Item on Plans	Comments Notes Examples

Check List 14. DRINKING FOUNTAINS

3 Centerline of accessible wheelchair DF must be 15” min from nearest alcove sidewall.

4 Centerline of accessible wheelchair DF must be 18” min from nearest alcove sidewall, if alcove is deeper than 24”.

5 Recommendation: Provide 32” between the centerlines of two adjacent DFs.

14.12 Provide and indicate the following dimensions for wheelchair accessible DF on enlarged elevations and plan:

CPC 1507.3
ADAAG 4.15

1. DF must be 18” deep and allow front approach.

2. Knee clearance must be 27” min AFF for a depth of 8” min, measured from the front of the DF.

3. Toe clearance must be 9” min AFF and 17” min deep, measured from the front of the DF.

4. DF activator must provide accessible operation and be within 6” of the front edge of the DF.

5. The bubbler outlet must be at 36” max AFF.

6. On DFs with round or oval bowls, the bubbler outlet must be located so that the flow of water is within 3” of the front edge of the DF.

7. On DFs with square bowls, the bubbler outlet must be within 6” of the front edge of the DF and provide a flow of water that is parallel with the front edge.

14.13 DF in facilities primarily used by children should be adjusted to meet their accessibility needs in accordance with the following suggested dimensions:

1. Knee clearance height AFF must be 24” max for elementary and 22” max for kindergarten.

2. The bubbler outlet height AFF must be 32” max for elementary and 30” max for kindergarten.

14.14 DF details on architectural plans do not correspond with site plan, plumbing plans, and/or specs. Coordinate.

14.15 Provided typical DF detail is not similar to actual DF fixture. Modify to provide dimensioned detail representing the actual fixture, for all accessible DF under this contract.

14.16 Bring manufacturer cut sheets for DF to back check.

© 2003 DSA/OUD

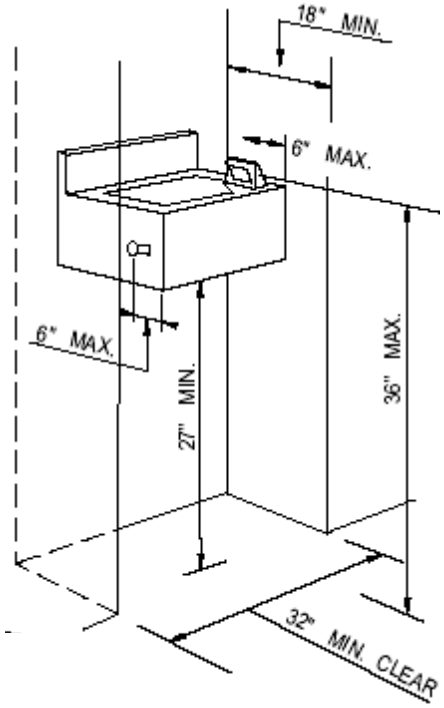

(a) ALCOVE INSTALLATION

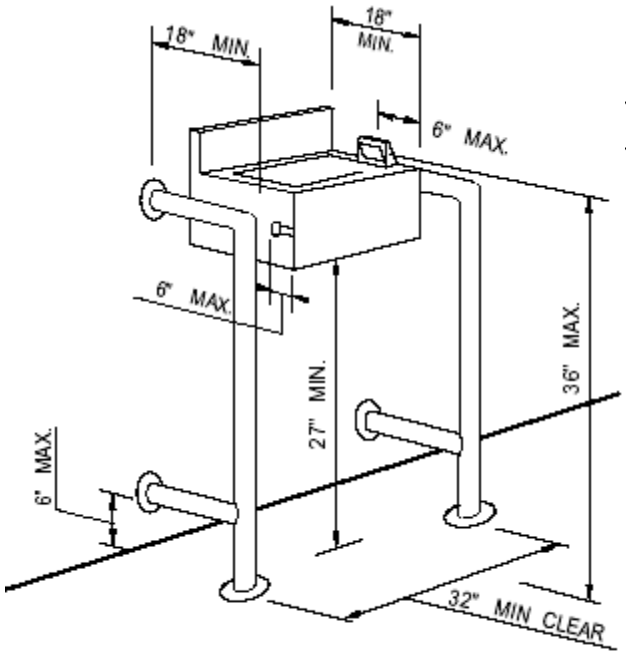

(b) NONALCOVE WING WALL INSTALLATION

Fig 14-A. Drinking Fountain

Fig 14-A. "Hi-Low" Drinking Fountain

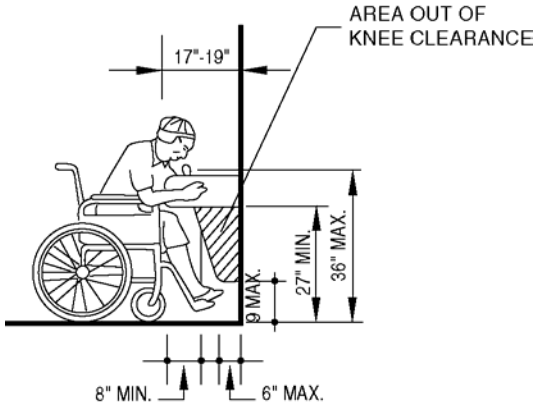

Fig 14-B. Knee and Toe Clearance

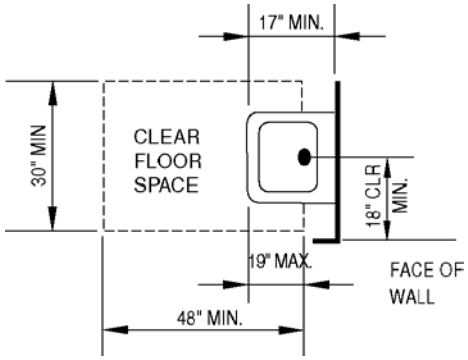

Fig 14-C. Clear Floor Space

15	Project designer (PD) shall address the following marked or circled items, and any additional plan review comments on drawings and specifications before scheduling a back check appointment for access compliance (AC). Any questions or points of disagreement must be resolved prior to back check by fax to plan reviewer (PR).		Justification, Reference, or Code Citation (C.C.R. Title 24, u.o.n.)	Location of Item on Plans	Comments Notes Examples
	Check List 15. SANITARY FACILITIES				
15.1	For additional scoping requirements and exceptions see also applicable **DSA/AC Preliminary Review Checklists** and **Checklist 1.**				
15.2	Indicate location and DSA application number of all toilet and bathing facilities on site plan.				
15.3	All toilet and bathing facilities under this contract must be made accessible (i.e. those that are to be newly constructed or altered, or part of the required POT). EXCEPTION: a. In alterations where accessibility is required to sanitary facilities serving the area of alteration, when DSA determines that compliance would create an unreasonable hardship, and when equivalent facilitation is provided. When equivalent facilitation is used, the following criteria shall apply: Accessible sanitary facilities are provided within a reasonable distance of inaccessible sanitary facilities (~200 ft. max.).		1115B.1		NOTE: See Section 1111B.4.6 and Chapter 11A for bathrooms in motel, hotel and other residential occupancies. NOTE: DSA does not determine hardship if the toilet facility provides only lateral or front transfer. See also **Item 15.4**.
15.4	Provide separate fully accessible facilities for each sex and for each type of use within close proximity (max. distance not to exceed 200' one way) of inaccessible separate facilities. EXCEPTION: a. In alterations when DSA determines that compliance would create an unreasonable hardship, and only when equivalent facilitation would result in the provision of a side-transfer toilet. DSA may accept unisex fully accessible toilets as equivalent to a pair of partially accessible arrangements for each sex.		1114B.1.2 1115B.1 1115B.2 DSA IR #97-01		NOTE: Labor code §2350 require separate facilities within a reasonable distance when there are five or more employees.
15.5	If DSA's determination is based on provisions pertinent to wheelchair access, it will not obviate or limit in any way the obligation to comply with other accessibility requirements (i.e. those serving persons with orthopedic, visual and hearing impairments.)				
15.6	In certain alterations, DSA may allow deferral of accessibility upgrades to future projects when <u>all</u> of the following criteria is met: **1** At least one fully accessible toilet facility for each user group served at this site is provided or will be provided in the course of the current project. **2** The public entity has prepared an ADA Transition Plan (see DSA IR # 00-01 for a description of accepted Plan formats.) **3** The toilet facility is included in the entity's Transition Plan and scheduled to be brought into compliance within 15 months of the submittal date of the current project.		28 CFR 35.150(d)		

15	Project designer (PD) shall address the following marked or circled items, and any additional plan review comments on drawings and specifications before scheduling a back check appointment for access compliance (AC). Any questions or points of disagreement must be resolved prior to back check by fax to plan reviewer (PR).		Justification, Reference, or Code Citation (C.C.R. Title 24, u.o.n.)	Location of Item on Plans	Comments Notes Examples
	Check List 15. SANITARY FACILITIES				
15.7	Provide at least one unisex fully accessible facility within close proximity to inaccessible unisex facilities.				
15.8	Provide directional signage at all inaccessible toilet and bathing facilities indicating the location of the nearest wheelchair accessible facility within the facility.		ADAAG 4.1.6(3)(e)(iii)		NOTE: Since the directional sign is for the benefit of people using wheelchairs, special care should be considered when choosing installation height and character size. However, Braille and raised letters may be omitted.
15.9	Location of accessible sanitary facilities or POT to those facilities should be such as not to expose persons with disabilities to weather conditions substantially different from those to which non-disabled persons are exposed.				
15.10	Common-use accessible restroom needs to be accessible directly from a corridor or from the outside (not through an office, a classroom, or any assembly or performance area which disturbs the function of that room).				
15.11	In alterations of kindergarten at least one accessible toilet facility must be made accessible for children of that age group.				
15.12	Door leading to sanitary facility must be accessible. Indicate door width, landing dimensions and slope, and show 90˚ door swing on plan.		1115B.4 ADAAG 4.1.3(7)(c)		
15.13	Door cannot swing into the 30”x48” clear space required for any fixture (i.e. front and side transfer spaces at accessible WCs, spaces at accessible urinal and all lavatories, and transfer spaces at accessible showers and bathtubs).		1115B.7.1.2 ADAAG 4.22.2, 4.23.2		
15.14	Recommendation: Door should not swing into the 30”x48” clear space required for the use of any dispenser, disposal, or other accessory.				
15.15	Indicate 30”x48” clear space on plan at accessible urinal, shower/bathtub, and for at least one accessible lavatory.				
15.16	Indicate 60” diameter circle or 63”x56” rectangle on plan (clear space measured from floor to 27” height).				
15.17	Doors, other than the door to the accessible compartment, cannot swing into the 60” circle or 63”x56” rectangle for more than 12”.		1115B.7.1.1 1115B.7.2		
15.18	In alterations, provide as-built dimensions pertinent to compliance status.				
15.19	For restroom signage see **Checklist 17**.				
15.20	Coordinate plumbing drawings with architectural drawings.				
15.21	See architectural drawings for additional plan review notes.				
15.22	Coordinate all fixtures shown on fixture schedule with all plumbing fixtures shown on plumbing and architectural drawings.				

15	Project designer (PD) shall address the following marked or circled items, and any additional plan review comments on drawings and specifications before scheduling a back check appointment for access compliance (AC). Any questions or points of disagreement must be resolved prior to back check by fax to plan reviewer (PR).		Justification, Reference, or Code Citation (C.C.R. Title 24, u.o.n.)	Location of Item on Plans	Comments Notes Examples

Check List 15. SANITARY FACILITIES

WATER CLOSETS (WCs) AND COMPARTMENTS

15.23	Compartment door to accessible fixture must comply with door maneuvering requirements. Indicate strike edge clearance and landing depth (e.g., for front pull-side approach show 18” and 60” dimensions). See **Checklist 8** for door requirements.		ADAAG 4.22.2, 4.23.2, Fig. 25		
15.24	Provide and indicate the following for compartment door to accessible fixture: **1.** Side entry stall door must have 34” clear opening. **2.** Front entry stall door must have 32” clear opening. **3.** Stall door must be self-closing, and have U-pulls on both sides. A locking mechanism must be included that does not require grasping, pinching, or wrist turning.		1115B.7.1.4		
15.25	Front entry stall door must be located in front of the WC side transfer space –and not in front of the WC– with a maximum stile width of 4 inches. Relocate door or fixture.		ADAAG Fig. 30(a)		

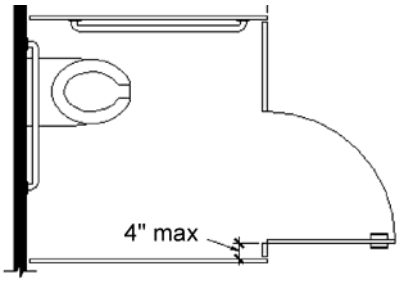

15.26	In multi-accommodation toilet rooms, provide and indicate a 44” min clear passageway to the accessible WC compartment, excluding door openings and door swings.		1115B.7.1.4		
15.27	In accessible compartments with out-swinging side entry stall doors, provide and indicate a 60” square space in front of the WC.		1115B.7.1 1115B.7.2 ADAAG Fig. 30(a-1)		

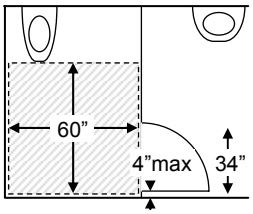

Out-swinging door and 60” square directly in front of water closet.
(All dims are min. u.o.n.)

15	Project designer (PD) shall address the following marked or circled items, and any additional plan review comments on drawings and specifications before scheduling a back check appointment for access compliance (AC). Any questions or points of disagreement must be resolved prior to back check by fax to plan reviewer (PR).		Justification, Reference, or Code Citation (C.C.R. Title 24, u.o.n.)	Location of Item on Plans	Comments Notes Examples

Check List 15. SANITARY FACILITIES

15.28 In accessible compartments with in-swinging side entry stall doors, provide and indicate 94” min total stall length when using wall-mounted, or 97” when using floor-mounted WC.

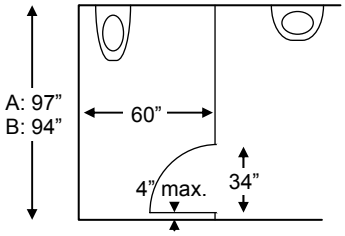

In-swinging door.
A: Floor-mounted WC
B: Wall-mounted WC
(All dims are min. u.o.n.)

NOTE:
When the 4” stile width dimension is reduced, the overall stall length can be decreased by the same amount.

15.29 In accessible compartments with out-swinging front entry stall doors, provide and indicate 48” max in front of the WC.

15.30 Indicate height of top of WC seat. Provide exact dimension, not a range and coordinate with specs. — 1115B.2.1

15.31 Indicate WC flush valve to be on wide side of toilet area.

15.32 In new construction and alterations, indicate 18” absolute from centerline of WC to nearest sidewall. — 1115B.7.1.3, 1115B.7.2

15.33 Nearest sidewall or partition must be parallel to centerline of WC. — 1115B.7.1.3

15.34 Recommendation: Provide back wall.

15.35 Indicate a 28” min wide clear distance between the accessible WC (or tank) and any other fixture or 32” to sidewall or partition that is located on the wide side. — 1115B.7.1, 1115B.7.2

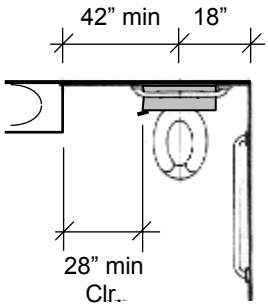

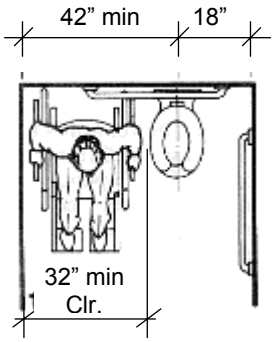

15.36 Indicate 42” min from centerline of WC to wall on wide side, or indicate total width of clear area to be 60” min (18”+42”) to allow side and front transfer use. — ADAAG Fig. 28-c

15.37 Provide one semi-ambulant stall where six or more WCs are provided within a multiple-accommodation toilet room. — 1115B.7.1.5, ADAAG 4.23.4

Project designer (PD) shall address the following marked or circled items, and any additional plan review comments on drawings and specifications before scheduling a back check appointment for access compliance (AC). Any questions or points of disagreement must be resolved prior to back check by fax to plan reviewer (PR).

Check List 15. SANITARY FACILITIES

		Justification, Reference, or Code Citation (C.C.R. Title 24, u.o.n.)	Location of Item on Plans	Comments Notes Examples
15.38 Provide and indicate the following at semi-ambulant stall:				
1. Stall must be 36” wide absolute (delete “min”).				
2. Stall length must provide 24” in front of the WC, and allow installation of grab bars on each side.				
3. Stall door must provide 32” clear opening.				
4. Stall door must be out-swinging, self-closing, have U-pulls on both sides and a locking mechanism that does not require grasping, pinching, or wrist turning.				
5. Parallel grab bars must be provided on both sides and must be 40” min long (42” preferred).		ADAAG Fig. 30(d)		
6. Centerline of WC should be 18” from sidewalls.				
GRAB BARS IN TOILET FACILITIES				
15.39 Indicate height of grab bar to be 33” o.c. AFF.		1115B.8.1		
EXCEPTION:				
a. Where a tank–type toilet is used which obstructs placement at 33”, the back grab bar may be 36” max o.c..				
15.40 Indicate back grab bar to be 36” min long.				
15.41 At WC not located in compartment, indicate 36” long back grab bar to extend 12” beyond the center of the WC toward the side wall, and 24” toward the open side.		ADAAG Fig. 29		
15.42 At WC located in compartment, indicate back grab bar to be within 6” from nearest sidewall.		ADAAG Fig. 30(a)		
15.43 At WC not located in compartment, indicate 42” min long side grab bar to extend 54” min beyond the back wall.		ADAAG Fig. 29		NOTE: To ensure compliant installation the use of a 48” long side grab bar, located 9” from the back wall, is recommended.
15.44 At WC located in compartment and providing front transfer, indicate 42” min long side grab bar to extend 54” min beyond the back wall.				
15.45 If side grab bar is 42” long and required to extend 54” min, delete the “max” at the 12” and the “min” at the 54” dimensions.				
15.46 Indicate diameter of grab bars and coordinate with specs.		1115B.8.2		
15.47 Indicate space between grab bar and adjacent wall to be 1 1/2" clear (delete “min”).				
ACCESSORIES				
15.48 Indicate location and provide necessary dimensions for all toilet/bathroom dispensers/disposals/accessories (e.g., soap,				

© 2003 DSA/OUD

Check List 15. SANITARY FACILITIES

paper towel, seat cover, feminine tissue, electric dryer, coat hooks, etc) on enlarged plans and elevations. Elements must be within reach range of user but cannot protrude into any required clear floor space.

15.49 Relocate accessories/dispensers to be no closer than 1.5" below and 18" above grab bars (except if accessories are recessed, flush with wall, and have no sharp edges).

15.50 Indicate toilet paper dispenser (TPD) centerlines to be 12" max from the front edge of the WC and 19" min AFF. TPD that control delivery, or that do not permit continuous paper flow, shall not be used.

1115B.9.3
ADAAG 4.16.6

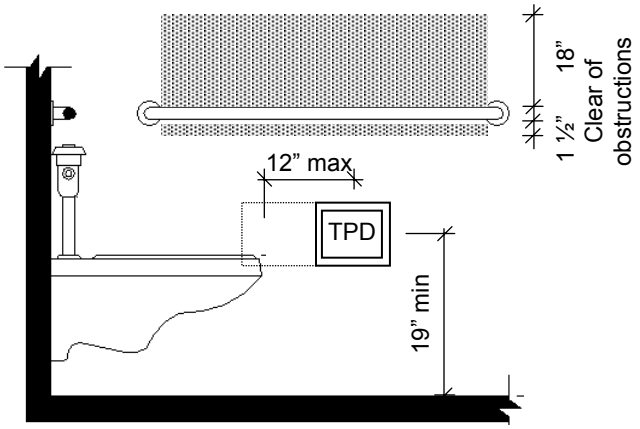

15.51 Indicate projection of dispensers and disposals (e.g., toilet paper dispenser, feminine tissue disposal (FTD)) in accessible and semi-ambulant compartment to be 3" max. Provide recess for installation and coordinate elevations, notes, and specs.

DSA IR
#99-07

15.52 Seat cover dispensers (SCD) must be within reach range of the clear space in front of or next to the water closet (36" max preferred to be from front edge of WC to centerline of SCD). FTD should be installed adjacent to WC with the top at approximately the same height.

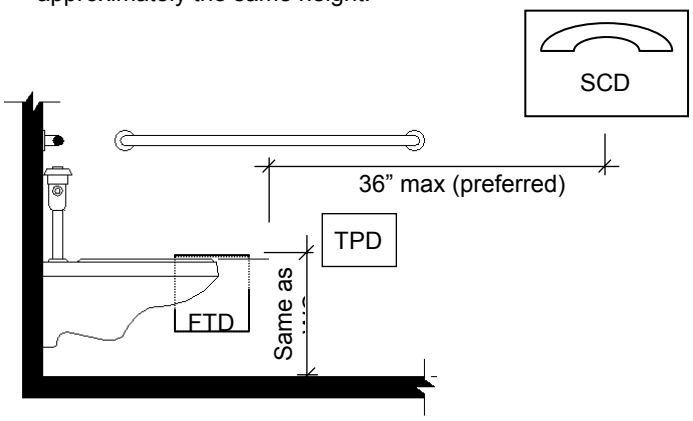

Project designer (PD) shall address the following marked or circled items, and any additional plan review comments on drawings and specifications before scheduling a back check appointment for access compliance (AC). Any questions or points of disagreement must be resolved prior to back check by fax to plan reviewer (PR).

Check List 15. SANITARY FACILITIES

		Justification, Reference, or Code Citation (C.C.R. Title 24, u.o.n.)	Location of Item on Plans	Comments Notes Examples
15.53 If dispensers and disposals are N.I.C., indicate dimensions of recess or compliant projection (3" max.)				
15.54 Indicate coat hook in accessible stall to be at 48" AFF.				
15.55 Indicate height of operable parts, including coin slots of dispensers, disposals and other equipment (at least one of each type) to be 40" max AFF.		1115B.9.2		
15.56 Indicate bottom of all mirrors at lavatories to be 40" max AFF (i.e. to the bottom of the mirrored surface not frame.)		1115B.9.1.2		
15.57 Provide soap and paper towel dispensers/electrical dryer within reach range of clear 30"x48" user space at accessible lavatory/sink.				
15.58 Indicate size and location of waste bin in all floor plans; especially if waste bin is N.I.C. This provides owner with dimensional requirements for purchase or installation. Provide recessed space in case waste bin would protrude into any required clear floor space (consider doors, fixtures, accessories, circulation path, etc.)				
LAVATORIES (LAVs)				
15.59 All lavs must be made accessible.		1115B.9.1		
15.60 Provide and indicate 18" min from any adjacent side wall to centerline of lav.				
15.61 Provide enlarged side elevation indicating the following dimensions: **1.** Rim or counter edge no higher than 34" AFF. **2.** Apron to floor 29" min. **3.** 27" min knee clearance. **4.** If a minimum 9" high toe clearance is provided, a maximum of 6" of the 48" clear floor space required at the fixture can extend into the toe space.		1115B.2.1.2		DSA may consider lavs protruding objects if they are located in the direct path of travel, or if a blind person would not expect them at this location.

© 2003 DSA/OUD

15	Project designer (PD) shall address the following marked or circled items, and any additional plan review comments on drawings and specifications before scheduling a back check appointment for access compliance (AC). Any questions or points of disagreement must be resolved prior to back check by fax to plan reviewer (PR).		Justification, Reference, or Code Citation (C.C.R. Title 24, u.o.n.)	Location of Item on Plans	Comments Notes Examples

Check List 15. SANITARY FACILITIES

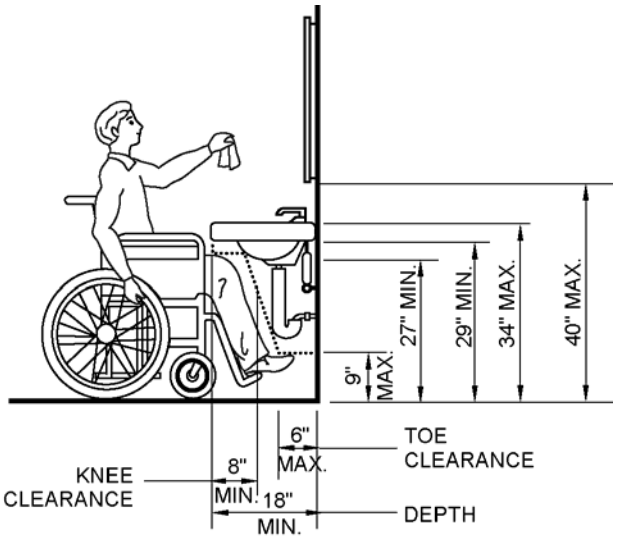

15.62	Shown lav elevation does not reflect actual fixture chosen. Modify or spec fixture that is shown in drawing.				
15.63	Provide note on plan stating that all hot water and all drainpipes must be insulated or otherwise covered.				
15.64	Provide the following note on plan: “There shall be no sharp or abrasive surfaces under lavatories”.		1115B.2.1.2.2		
15.65	Paper towel dispenser/electrical dryer cannot protrude into 30”x48” at lav.				
URINALS					
15.66	Provide at least one wall hung accessible urinal and indicate the following: **1.** Rim to be 17” max AFF. **2.** Recommendation: rim to be 13” min AFF to accommodate toe clearance. **3.** Rim to project 14” min from back wall. **4.** Flush control at 44” max AFF.		1115B.2.1.1 ADAAG 4.18.2		
15.67	Indicate 15” min clearance from centerline of urinal to any wall or partition that projects out less than 24” from the front edge of the 30”x48” clear space.				

Project designer (PD) shall address the following marked or circled items, and any additional plan review comments on drawings and specifications before scheduling a back check appointment for access compliance (AC). Any questions or points of disagreement must be resolved prior to back check by fax to plan reviewer (PR).

		Justification, Reference, or Code Citation (C.C.R. Title 24, u.o.n.)	Location of Item on Plans	Comments Notes Examples

Check List 15. SANITARY FACILITIES

15.68 Indicate 18” min clearance from centerline of urinal to any wall or partition that projects out more than 24” from the front edge of the 30”x48” clear space.		Fig 11B-5A		

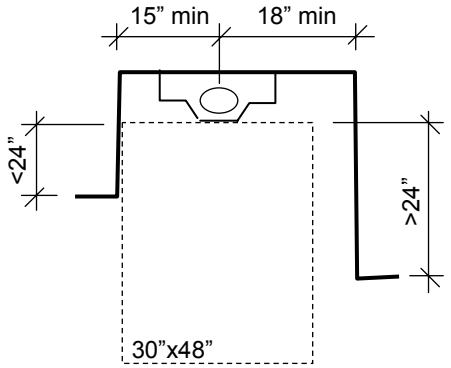

SHOWERS

15.69 Provide one accessible shower for each 100 (or fraction thereof) of total showers.				
15.70 Indicate size of shower stall to be either: **1.** 36”x60” with a 36” deep and 60” long clear space in front of the opening. Or **2.** 30”x60” with a 36” deep and 60” long space in front of the opening.		Fig 11B-2 ADAAG 4.21.2 ADAAG Fig 35		NOTE: Shower stalls measuring 42”x48” are not specifically covered by federal guidelines and are pending approval by the U.S. DOJ.
15.71 In open shower facilities (gang showers), locate accessible shower in corner and provide grab bars as shown in CBC Figure 11B-2C (the 36” long grab bar must be located so that seat can be folded up).		1115B.6.3		
15.72 Provide the following shower accessories and indicate location and dimensions: **1.** Single-lever faucet control. **2.** Hand-held sprayer with hose. **3.** Folding seat. **4.** Grab bars. **5.** Soap dish.		1115B.6.2.4		
15.73 Indicate floor slope to be 2% max.				
15.74 30”x60” shower stall cannot have curb or lip.		ADAAG 4.21.7		

Project designer (PD) shall address the following marked or circled items, and any additional plan review comments on drawings and specifications before scheduling a back check appointment for access compliance (AC). Any questions or points of disagreement must be resolved prior to back check by fax to plan reviewer (PR).

Check List 15. SANITARY FACILITIES

		Justification, Reference, or Code Citation (C.C.R. Title 24, u.o.n.)	Location of Item on Plans	Comments Notes Examples
BATHTUBS				
15.75 Provide one accessible bathtub for each 100 (or fraction thereof) of total bathtubs.				
15.76 Indicate size of clear floor space in front of bathtub (in relation to long dimension of tub): **1.** 48”x60” for perpendicular approach at bathtub with seat in tub. **2.** 30”x60” for parallel approach at bathtub with seat in tub. **3.** 30”x75” for parallel approach at bathtub with seat behind head-end of tub.		Fig 11B-8 ADAAG Fig 33		
15.77 Provide the following bathtub accessories and indicate location and dimensions: **1.** Single-lever faucet control. **2.** Hand-held sprayer with hose. **3.** Seat. **4.** Grab bars. **5.** Soap dish.		1115B.6.1		
LOCKER ROOMS IN BATHING FACILITIES				
15.78 Provide one accessible locker for each 100 (or fraction thereof) of total lockers.		1115B.6.4 ADAAG 4.1.3(21)		
15.79 Locker must allow approach from both sides (left and right) and the front.				
15.80 Provide elevation and indicate heights of locks (at 48” max), shelves (between 15” and 48”), and hooks (at 48” max).				
15.81 Recommendation: Shelves should be height adjustable.				
15.82 Provide and indicate a bench or section of bench close to the accessible locker, measuring 24” deep, 48” wide, and 18” high, and fixed to a wall along the longer dimension.		1110B.1.7 ADAAG 4.35.4		
15.83 Provide and indicate a 60” square clear space in front of the accessible bench section, located in such a manner to allow a person using a wheelchair to make a parallel transfer onto the bench.				
15.84 Recommendation: Provide horizontal and vertical grab bars at the accessible bench section.				
15.85 Provide and indicate a 36” min wide POT to accessible locker and bench section				

© 2003 DSA/OUD

Project designer (PD) shall address the following marked or circled items, and any additional plan review comments on drawings and specifications before scheduling a back check appointment for access compliance (AC). Any questions or points of disagreement must be resolved prior to back check by fax to plan reviewer (PR).

	Justification, Reference, or Code Citation (C.C.R. Title 24, u.o.n.)	Location of Item on Plans	Comments Notes Examples

Check List 15. SANITARY FACILITIES

CHILDREN

15.86 Design and construction of toilet and bathing facilities primarily used by children should be adjusted to meet their accessibility needs. See Figure 15-A at the end of this checklist for an updated table of suggested dimensions.

© 2003 DSA/OUD

A = Adult Dimensions (age 12 and over).
E = Elementary dimensions.
K = Kindergarten and pre–school dimensions.
FED = ADAAG dimensions for children age 12 and younger, shown for reference only.

ALTERNATIVE DIMENSIONS		**A (Inches)**	**E (Inches)**	**K (Inches)**	***FED Children***
a	Toilet centering from wall	18	15	12	*12-18*
b	Toilet seat height/dimensions to top of seat	17-19	15	11-12**	*11-17*
c	Grab bar height (centerline)	33	27	20-22	*18-27*
d	Toilet paper above floor (centerline)	19 min	-	-	*14-19*
e	Toilet paper in front of toilet	12 max	6 max	6 max	-
f	Napkin disposal in front of toilet	12 max	12 max	N/A	-
g	Sanitary dispenser height	40 max	36 max	32 max	*29-44*
h	Mirror height (to bottom of glass)	40 max	34 max**	32 max	*34 max*
I	Lavatory/sink top height	34 max	31 max**	26 max**	*31 max*
j	Lavatory apron clearance	29 min	-	-	*24 min**
k	Lavatory/sink knee clearance	27 min	24 min	19 min	*24 min**
l	Urinal lip height	13-17	13-15	14 +/-1	-
m	Urinal, toilet flush handle height	44 max	37 max	32 max	*36 max*
n	Drinking fountain bubbler height	36 max	32 max	30 max	*30 max*
o	Drinking fountain knee clearance	27 min	24 min	22 min	-
p	Ramp/stair handrail height	34-38	27***	22***	*28 max*
q	Fixed or built-in seating, table top height	28-34	-	-	*26-30**
r	Fixed or built-in seating and table knee clearance	27 min	24 min	-	*24 min**
s	Forward reach range (high)	48 max	-	-	*36-44*
t	Side reach range (high)	54 max	-	-	*36-44*
u	Forward reach range (low)	15 min	-	-	*16-20*
v	Side reach range (low)	9 min	-	-	*16-20*

* No ADAAG requirement if element is used primarily by children ages 5 and younger and if clear floor and parallel approach is provided.
** Change from CBC due to more restrictive federal standards (see GC 4450(b) and CBC §101.17.11).
*** In addition to adult rail.

Fig 15-A. Alternative Dimensions for Children's Use

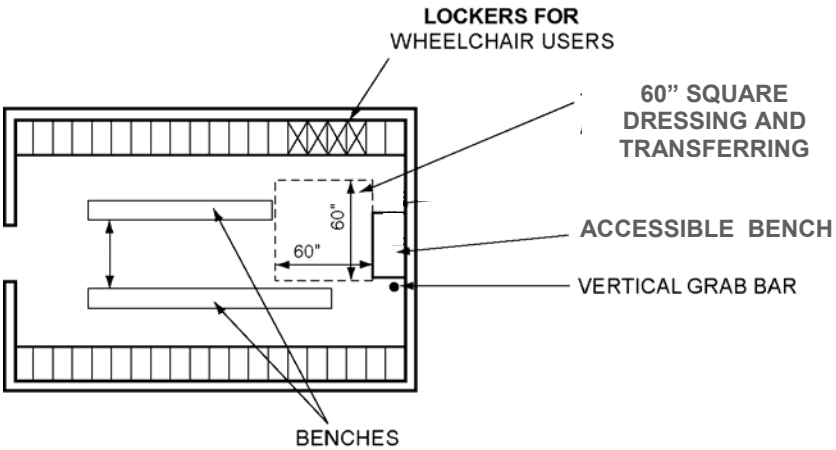

Fig 15-B. Locker Rooms

16	Project designer (PD) shall address the following marked or circled items, and any additional plan review comments on drawings and specifications before scheduling a back check appointment for access compliance (AC). Any questions or points of disagreement must be resolved prior to back check by fax to plan reviewer (PR).		Justification, Reference, or Code Citation (C.C.R. Title 24, u.o.n.)	Location of Item on Plans	Comments Notes Examples
	Check List 16. ALARMS				
16.1	For general scoping requirements and exceptions see also **Checklist 1.** To be reviewed in coordination with Fire/Life/Safety.				NOTE: See Section 1111B.4.5 and **Checklist 22** for additional requirements in motels, hotels and other residential occupancies.
16.2	Every facility that has, or is required to have an emergency warning system must be equipped with means of warning persons with hearing impairments in accordance with NFPA 72 as amended in Chapter 35 of Title 24 and the ADAAG. EXCEPTION: a. Emergency warning systems in medical care facilities may be modified to suit standard health care alarm design practice. b. In large assembly areas, such as auditoria or stadiums, where the appropriate administrative authority determines that the provision of audio/visual alarm notification would constitute a hazard to the general public.		1114B.2.4 ADAAG 4.1.3(14)		
16.3	When installation of an emergency warning systems is required in this building, provide names or numbers, and function (relevant to the occupancy type and use) for all rooms and areas.				
16.4	Provide visual alarm signals (strobe lights) in all common-use areas and indicate location and intensity on plans. **1.** Toilet and bathing facilities. **2.** Classrooms and locker rooms. **3.** Band and music practice rooms. **4.** Gymnasiums and multipurpose rooms. **5.** Occupational shops. **6.** Occupied rooms where ambient noise impairs hearing of the fire alarm. **7.** Corridors, hallways, lobbies, and enclosed staircases. **8.** Cafeterias, meeting and conference rooms. **9.** Any rooms frequently used by persons with hearing impairments (such as HIP or speech therapy classrooms). **10.** Filing and photocopy rooms, employee break rooms. **11.** Dressing, examination, and treatment rooms, and similar spaces that are not used solely as employee work areas. **12.** Any other area for common use.		CBC 204 ADAAG 4.28.1, ATBCB Bulletin #2		DEFINITION: "Common-Use Areas" refers to those interior and exterior rooms, spaces, or elements that are made available for the use of a restricted group of people (for example, occupants of a homeless shelter, the occupants of an office building, or the guests of such occupants).
16.5	Strobe lights must provide 75 candela min intensity (effective strength, measure at the source.) EXCEPTION: a. In smaller rooms, such as examination, toilet, and dressing rooms, a single strobe of lesser intensity may well be sufficient as an equivalent facilitation. However, as		ADAAG 4.28.3(4)		NOTE: ADAAG requirements for alarm systems may be more stringent than those in Chapter 35 or NFPA 72.

Project designer (PD) shall address the following marked or circled items, and any additional plan review comments on drawings and specifications before scheduling a back check appointment for access compliance (AC). Any questions or points of disagreement must be resolved prior to back check by fax to plan reviewer (PR).

	Justification, Reference, or Code Citation (C.C.R. Title 24, u.o.n.)	Location of Item on Plans	Comments Notes Examples

Check List 16. ALARMS

there is no process for certifying alternative methods (except in transportation facilities under DOT enforcement), the responsibility for demonstrating equivalent facilitation in the event of a challenge rests with the covered entity.

16.6 Provide note or indicate on plan installation height of strobe light to be between 80” and 96” AFF, or 6” min below the ceiling, whichever is lower.

ATBCB Bulletin #2

16.7 Where ceiling mounted strobe lights are provided, bring manufacturers cut sheets to back check, showing the 6” below the ceiling requirement is met.

16.8 Recommendation: Large, high-ceilinged spaces may best be served by suspended flash tubes of very high intensity (lamps up to 1000 candela are available for such applications).

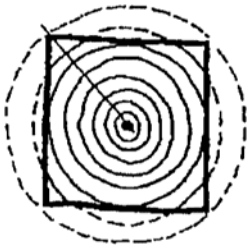

Recommend

Not Recommended

16.9 No place in common corridors shall be more than 50’ from the strobe light.

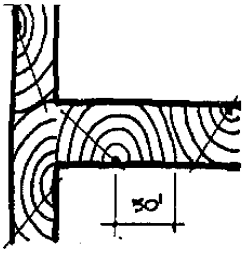

Recommended spacing in corridors

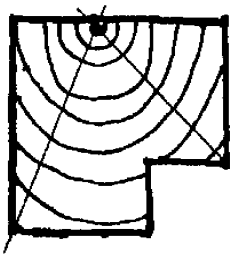

Placement in irregularly configured rooms

16.10 All areas required to be “strobed” must have a direct line of sight to at least one strobe light.

Title 24, Part 3, Sec. 760-16

NOTE:
ADAAG requirements for alarm systems may be more stringent than those in Chapter 35 or NFPA 72.

EXCEPTION:

a. Areas with columns less than 36” wide.

b. Restrooms with toilet stall partitions, less than 84” high AFF.

c. Areas with half high partition walls, less than 60” high AFF.

© 2003 DSA/OUD

16	Project designer (PD) shall address the following marked or circled items, and any additional plan review comments on drawings and specifications before scheduling a back check appointment for access compliance (AC). Any questions or points of disagreement must be resolved prior to back check by fax to plan reviewer (PR).		Justification, Reference, or Code Citation (C.C.R. Title 24, u.o.n.)	Location of Item on Plans	Comments Notes Examples
	Check List 16. ALARMS				
16.11	Provide note or indicate on plan installation height of fire alarm initiating device (pull box) to be at 48” AFF. EXCEPTION: a. In alteration projects, when the initiating device is 54” AFF and parallel approach is provided, initiating device does not have to be relocated.				NOTE: ADAAG requirements for alarm systems may be more stringent than those in Chapter 35 or NFPA 72.
16.12	Provide front and parallel approach at newly installed fire alarm initiating device.				
16.13	Indicate accessible operating hardware at initiating device (e.g., not requiring tight grasping, pinching, or twisting of the wrist, and force less than 5 lbs).		1117B.6.4 ADAAG 4.27.4		
16.14	Fire alarm initiating device must be located on POT.				
16.15	Fire alarm initiating device cannot be located where a person using a wheelchair would be forced to reach over an obstruction.		Fig. 11B-5C(a)		
16.16	Provide note or indicate on plan or elevation height of fire extinguisher cabinet opening hardware to be at 48” AFF max.				
16.17	Provide front and parallel approach at newly installed fire extinguishers.				
16.18	Indicate accessible opening hardware at fire extinguisher cabinet (e.g., U-pull and latch force less than 5 lbs.)				

© 2003 DSA/OUD

17	Project designer (PD) shall address the following marked or circled items, and any additional plan review comments on drawings and specifications before scheduling a back check appointment for access compliance (AC). Any questions or points of disagreement must be resolved prior to back check by fax to plan reviewer (PR).		*Justification, Reference, or* Code Citation (C.C.R. Title 24, u.o.n.)	Location of Item on Plans	Comments Notes Examples
	Check List 17. SIGNAGE AND WAY-FINDING				
17.1	For additional scoping requirements and exceptions see also applicable **DSA/AC Preliminary Review Checklists** and **Checklist 1.**				
17.2	Provide details and specs for all signs applicable to this project and indicate the provision/installation on site plans, floor plans and elevations.				
17.3	Signs that are located on or at doors must be included in the door schedule, or provide a separate signage schedule which references the door mark for each sign.				
17.4	Reference signage details for each door and and indicate message (e.g., “TO EXIT”, “GIRLS”, “124”, etc).				
17.5	The following signs may be required:				
	1. "Tow-away" signs at parking lot entrance (or at stall).		1129B.5		
	2. Accessible parking signs, incl. van sign.		1129B.5		
	3. Accessible passenger loading zones.		ADAAG 4.1.2(7)(b)		
	4. Exterior directional signage.		1127B.3		
	5. International Symbol of Accessibility (ISA) signs at all accessible entrances.		1117B.5.7		**ISA** (International Symbol of Accessibility)
	6. Directional signage at all inaccessible entrances, directing persons to the nearest accessible entrance.		28 CFR 35.163(b)		
	7. Assistive Listening System (ALS) signs, indicating availability of ALS.		1104B.2.4		
	8. Raised letters/California Grade 2 Braille EXIT signs at all exit doors (NOTE: this is in addition to the overhead/low-level illuminated exit signs).		28 CFR 35.163(a)		
	9. California restroom symbols (circle/triangle) on door leafs, incl. ISA if restroom is wheelchair accessible.		1115B.5		
	10. Restroom identification sign on wall shall include gender pictogram, raised letters and California Grade 2 Braille.		1115B.5		
	11. ISA accessible seating, incl. aisle seats, companion seats, and wheelchair spaces at bleachers.		1104B.3.4.1, DSA IR #98-05		
	12. Area of evacuation assistance identification and illuminated signage.		1114B.2.2.5		
	13. Volume control sign at telephones.		1117B.2.8		
	14. TTY signage and TTY directional signage.		1117B.2.9.2, 3		
	15. Building directory or lobby sign informing building users that specific sanitary facilities and/or elevators for public use have been remodeled.		1117B.5.8		
	16. Warning signs at inaccessible exits.		1133B.1.1.1.1		
	17. Enclosed stairway signage.		DSA IR #98-06		
	18. Elevator and elevator lobby signage.		Title 24, 3003		
	19. Platform lift signage.		Title 24, 7-3094		

© 2003 DSA/OUD

Project designer (PD) shall address the following marked or circled items, and any additional plan review comments on drawings and specifications before scheduling a back check appointment for access compliance (AC). Any questions or points of disagreement must be resolved prior to back check by fax to plan reviewer (PR).

Check List 17. SIGNAGE AND WAY-FINDING

		Justification, Reference, or Code Citation (C.C.R. Title 24, u.o.n.)	Location of Item on Plans	Comments Notes Examples
20. Evacuation plans.				
21. No Smoking signs.				
22. Recommendation: Provide sign at main visitor entrance area to notify about the provisions of the ADA, and indicate the contact information of the entity's ADA-Coordinator.		28 CFR 35.106, 107		
17.6 Indicate and specify materials, colors, and typestyles to be used for all accessible signage (visual and tactile), according to the following criteria:		1117B.5 ADAAG 4.30		
1. Except for reflective parking and traffic signs, all identification, informational and directional signs must have non-glare backgrounds and characters. "Matte," "satin" or brushed metals are rarely appropriate. These and other shiny or reflective materials are only appropriate for frames or other strictly decorative elements which don't intrude into area of sign.				
2. Contrast between characters and background must be 70% min.				
3. Character width 100 percent max and 60 percent min of height, measured by width of uppercase "X" at base; or by width of uppercase "O" (whichever is more narrow). Stroke width must be 10 percent min to 20 percent max of character height, measured by stroke, width, and height of uppercase "I."				
4. Add specifications for visual characters as follows: visual characters can be serif or sans serif and upper and lowercase characters may be used for visual characters. Recommendation: Use upper and lowercase characters except where required by other codes or statutes, with possible exception of headings.				
5. Use typestyles which are conventional and non-decorative. No script, italic or oblique typestyles.				
6. Ease all edges and corners of signs. On signs installed on poles, provide radius corners and eased edges.				
17.7 Add specifications for tactile characters as follows: raised characters must use sans serif font, in all uppercase characters. No serif fonts of any kind are allowed. Recommendation: Specify 1/8" min between two closest points of adjacent tactile characters, measured at top surface of characters. Recommend beveled or rounded characters.				
17.8 California Grade 2 Braille must accompany raised text characters. NOTE: Most Braille signs that are identified by manufacturers to be ADA compliant, do not comply with California's requirement.				
17.9 Recommendation: Rounded or domed California Braille dots, each distinct and separate. Dots with straight sides and flat tops are not readable for many Braille users.				NOTE: Most Braille signs that are identified by manufacturers to be ADA compliant, do not comply with California's requirement.

© 2003 DSA/OUD

17	Project designer (PD) shall address the following marked or circled items, and any additional plan review comments on drawings and specifications before scheduling a back check appointment for access compliance (AC). Any questions or points of disagreement must be resolved prior to back check by fax to plan reviewer (PR).		*Justification, Reference, or* Code Citation (C.C.R. Title 24, u.o.n.)	Location of Item on Plans	Comments Notes Examples
	Check List 17. SIGNAGE AND WAY-FINDING				
17.10	California Braille dots within cells must be 1/10” apart o.c. Cells must be 2/10” apart. Measure cell distance from the center of top dot location of column two of the first cell to the center of top dot location of column one of the next cell on right, within the same word. Dots must be 1/40” high at dot apex.				
17.11	Indicate material and color descriptions and sample typestyles in plan as follows: **1.** Include color and material specifications for sign message backgrounds and characters to demonstrate minimum contrast and non-glare characteristics. **2.** Show 1” high examples of uppercase characters “I,” “O,” and “X”, in chosen typestyle(s), indicating whether style is for tactile characters, visual characters, or both.				
17.12	Provide character and symbol size for all signs as follows: **1.** On visual signs, size characters and symbols according to viewing distance. Signs mounted 80” or more AFF must have 3” high min characters. **2.** Recommendation: Pictograms and ISAs on interior signs at eye level should be 3” min high or twice as high as height of largest text on sign, whichever is greater. On signs where bottom is 72” or more AFF, minimum should be 6” high or twice as high as height of largest text on sign, whichever is greater. NOTE: Pictograms and other symbols, such as ISAs, which are included on signs with raised characters and Braille are not required to be raised. The ISA, when included on a tactile sign, does not require any accompanying text, either visual or tactile. **3.** On tactile signs, raised characters must be 5/8” min and 2” max high. Recommendation: Character height 1.” **4.** Pictograms (pictorial symbols) that identify rooms and spaces, such as gender pictograms for restrooms must be in a 6” min high field directly above accompanying raised text and California Braille. No characters or Braille in field.				NOTE: Pictograms and other symbols, such as ISAs, which are included on signs with raised characters and Braille are not required to be raised. The ISA, when included on a tactile sign, does not require any accompanying text, either visual or tactile.
17.13	Where size is dictated by code, specify exact sizes and material thickness. For instance, geometric symbol signs are 1/4" thick, and have 12” measurements.				
17.14	For exterior wayfinding signs, determine all decision points on site, beginning at pedestrian entrances, bus stops, parking lots and drop off points, where accessible POT deviates from regular pedestrian POT. Specify and locate on plan directional or informational sign for each decision point so that steps do not have to be retraced. Sign must include ISA and appropriate arrow and/or text. Determine appropriate size by distance from which sign will be viewed and mounting height of sign. Recommendation: Do not include signs with ISA at intervals along POT when entire POT is accessible. **1.** ISA must be white on Federal Blue background, with non-glare surface.				

© 2003 DSA/OUD

		Justification, Reference, or Code Citation (C.C.R. Title 24, u.o.n.)	Location of Item on Plans	Comments Notes Examples
Check List 17. SIGNAGE AND WAY-FINDING				
2. Recommendation: Use as little text as possible, and for existing facilities, determine what terminology is already used by those on site. To aid those with cognitive disabilities, be consistent, brief and repetitive.				
17.15 Place ISA at each accessible building entrance. Where all entrances are not accessible, place directional or informational sign so that steps do not need to be retraced, to direct from inaccessible to accessible entrances. Include ISA on sign along with appropriate arrow and/or text.				NOTE: Pictograms and other symbols, such as ISAs, which are included on signs with raised characters and Braille, are not required to be raised. The ISA, when included on a tactile sign, does not require any accompanying text, either visual or tactile.
1. On campuses where individual classrooms are entered by exterior doors, rather than through a central hall or corridor within building interior, and all such exterior doors are accessible, do not specify an ISA at each such door.				
2. Recommendation: Place signs where persons in wheelchairs can see them at eye level. Don't place signs at bottom of doors. If no space directly on door, prominent sign with ISA can be placed adjacent to door.				
3. Recommendation: If electronically controlled door opens with push button device, specify label with prominent ISA located where visible as door is approached. If impossible, specify that ISA with directional arrow to control be located where visible as door is approached.				
4. Recommendation: California statute requires that every building entrance have a sign stating "No Smoking" or "No Smoking Except in Designated Areas." This sign should follow the rules for informational signs, with no glare, high contrast, and readable type. It can be included on the same sign panel as the ISA to reduce clutter.				
17.16 When interior accessible POT diverges from regular pedestrian POT, and when one is not immediately visible from the other, (for instance, elevator is not adjacent to stair or lift to stage platform is behind door) or when all facilities such as restrooms, drinking fountains, telephone equipment and ground floor exits are not accessible, specify and locate on plan informational and/or directional signs, to include appropriate Symbol of Accessibility and text such as "Restroom," "Elevator" or "TTY" along with brief text and arrows to indicate location of accessible elements. Locate signs at decision points so that steps will not have to be retraced.				NOTE: Pictograms and other symbols, such as ISAs, which are included on signs with raised characters and Braille, are not required to be raised. The ISA, when included on a tactile sign, does not require any accompanying text, either visual or tactile.
1. At the approach to an inaccessible exit, provide a sign directing to the nearest accessible exit. Install at location so that steps do not need to be retraced. Add additional directional signs at subsequent decision points as necessary.				
17.17 Provide sign schedule to show identification of all permanent rooms and spaces, including restrooms and exits, with raised characters accompanied by California Braille, in compliance with standards for tactile character and Braille signs. Requirement applies to all such rooms and spaces whether entered from interior hallways, or by individual exterior				

Check List 17. SIGNAGE AND WAY-FINDING

entrances. Indicate on schedule any accompanying visual text and symbols or pictograms.

17.18 Recommendation: Use room numbers to identify all rooms except for restrooms and exits. Carefully consider the logical POT through site or building before establishing identification system. For small facilities with 10 or fewer rooms or offices, or for individual offices contained within larger enclosed numbered areas, letter identification may be appropriate. In existing facilities, if classrooms already have well-established numbers, it may be necessary to use letters for other rooms such as storage areas. Also, it may be appropriate to use a letter-number combination where there are separate buildings. Room function, such as “Classroom,” “Principal” or “Custodian” may be included on the sign in visual text. For economy, include the room function or occupant on a changeable insert or panel.

17.19 Recommendation: Provide sign schedule in conjunction with door schedule.

1. Provide appropriate terminology for restrooms on sign schedule: For male facilities, “Men,” “Boys.” For female facilities, “Women,” “Girls.” For single use unisex facilities, “Restroom.” For unisex facilities which accommodate an attendant or parent, “Family Restroom.”
2. Specify appropriate tactile exit sign for each exit door. Use terminology established by California State Fire Marshal for tactile exit signs. For ground floor door which exits to exterior, use “EXIT.” For door leading directly into exit stairway or rampway, use “EXIT STAIR (or RAMP) DOWN (or UP)” as appropriate. For marked exit leading into exit corridor, hallway or space use “EXIT ROUTE.” For horizontal exit (very rare) use “TO EXIT.”
3. Recommendation: When exits are alarmed, or exit door will lock and not allow reentry, it is helpful to people who are blind to add second tactile sign stating “ALARM” or “DOOR WILL LOCK.”
4. In buildings with more than one floor and with enclosed stairwells, include in sign schedule required floor level identification numbers, accompanied by California Braille. Show location of signs on plan adjacent to door inside stairwell leading to corridor.

17.20 Provide drawings for identification signs as follows:

1. Show layout of typical sign indicating position of raised text in relationship to Braille and any other raised elements on sign, such as borders or frames. Indicate location of pictograms and symbols on tactile identification signs and geometric door signs as appropriate by providing scale drawings of each sign type.
2. Recommendation: Locate raised text and Braille below center of sign. Braille should be directly below text, separated by 3/8” min from bottom of text to top of Braille,

Check List 17. SIGNAGE AND WAY-FINDING

either flush left with text or centered below it, depending on layout. Keep tactile messages very brief. However when raised text is multi- lined, keep entire raised text together, followed by entire Braille message below it, rather than alternate lines of text and Braille. Raised text and Braille should be 1/2" min away from raised borders or frames, which can interfere with reading of tactile material.

3. Geometric symbol door signs for restrooms must contrast with door, dark on light or light on dark. For unisex door signs, triangle to contrast with circle, which must contrast with door. Entire background color of geometric symbol sign must contrast with door. It is not allowed to have a thin contrasting border around symbol, with remainder of sign background in a non-contrasting color. ISA, contrasting with background, may be on sign.

4. If a gender pictogram is desired on geometric symbol sign, it must be repeated above raised characters and Braille on tactile sign adjacent to door. ISA may be included on either tactile sign, next to gender pictogram, or may be only on geometric symbol sign, as desired. No raised text or Braille is to be included on geometric door sign.

5. When restrooms have no doors, but merely a privacy wall, geometric symbol sign can become the tactile sign. Appropriate gender pictogram can be on geometric sign, with raised text and Braille below.

6. For stair level sign at ground level, tactile 5 pointed star should be placed to left of floor number. All star points should be of equal length, and star should be same height as floor number. Braille translation for star is “Main.” NOTE: (Title 19) Do not confuse with 12-inch Fire Code sign required in all enclosed stairwells in buildings of four or more floors. The 12-inch sign does not require raised characters or Braille, and should not be located immediately adjacent to door leading from stairwell into corridor.

17.21 Provide additional required signs on schedule as appropriate: schedule.

1. Locate accessible phone equipment on plan and specify appropriate Symbols of Accessibility, the TTY Symbol for text telephones, and the Volume Control Symbol for volume control phones. If there are banks of phones with no accessible equipment, indicate placement of sign that directs from those phones to accessible phones.

2. Determine if assistive listening system is required, and specify appropriate informational signs, to include appropriate symbol. Locate signs at box office or lobby, at entrance, or at administration building, as appropriate. More than one sign can be provided. Include information on sign telling how to reserve or be provided with system.

3. When buildings have been remodeled to provide accessible elements such as restrooms and elevators,

 © 2003 DSA/OUD

		Justification, Reference, or Code Citation (C.C.R. Title 24, u.o.n.)	Location of Item on Plans	Comments Notes Examples

Check List 17. SIGNAGE AND WAY-FINDING

post sign at entrance or in lobby informing of available features.

4. In buildings with more than one floor which have interior corridors, elevators and/or enclosed stairwells, evacuation plans are required. Locate these plans inside each main building entry, each elevator lobby, and in close vicinity of each door leading to enclosed stairwell.
Evacuation plans are directional and informational and must conform to standards for visual signs. They must be non-glare, high contrast, and use readable text and symbols of appropriate size.
Hotels and lodging houses must include evacuation plans in each room, and must provide evacuation information usable by persons with vision impairments. The preferred means is audible information.

17.22 Specify installation of signs and show location of signs on plan. Also include required installation.

1. Informational and directional signs can be installed on walls, doors, posts, or in the interiors of buildings, projecting from walls or hanging from the ceiling in corridors, as long as location will allow them to be easily found and read by persons with various disabilities.

2. Specify location of ISAs for wheelchair users at eye level (43” - 51”), except when they need to be seen across a large space. Specify location of TTY Symbol or Volume Control Symbol high enough so it can be seen even when telephone is in use by another person. Specify location of International Symbol of Hearing Loss to indicate the availability of an assistive listening system outside entrance to room where it can be used, and also in Lobby, at ticket window, or at entrance to office where it must be reserved for use.

3. Specify location of tactile signs as follows: Tactile signs must be installed adjacent to specific door they identify, at 60” on center AFF. Sign must not be installed behind an obstruction, and reader must be able to approach sign within 3” without being hit by swing of door.
Recommendation: When door opens outward, center sign horizontally within 18 inch space adjacent to latch side of door.

4. Specify location of evacuation plans so that lower edge of plan is no more than 48 inches from finish floor.

 © 2003 DSA/OUD

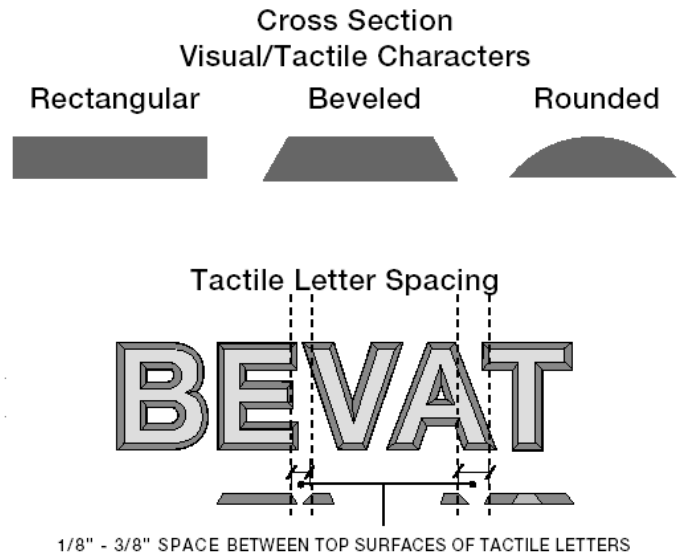

Fig 17-A. Character Spacing

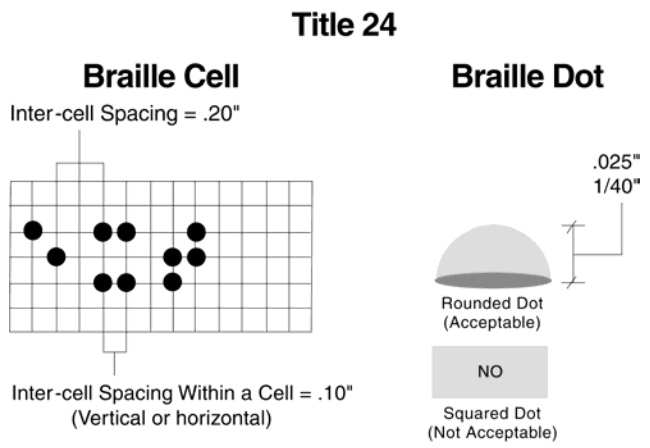

Fig 17-B. California Braille

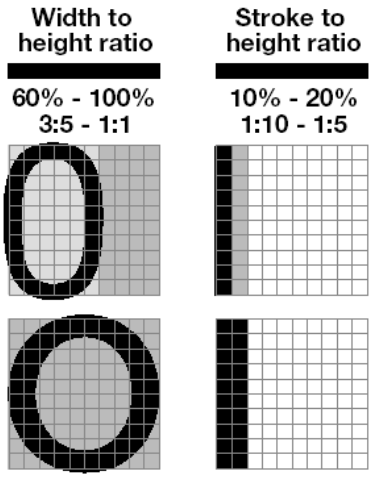

Fig 17-C. Font Ratio

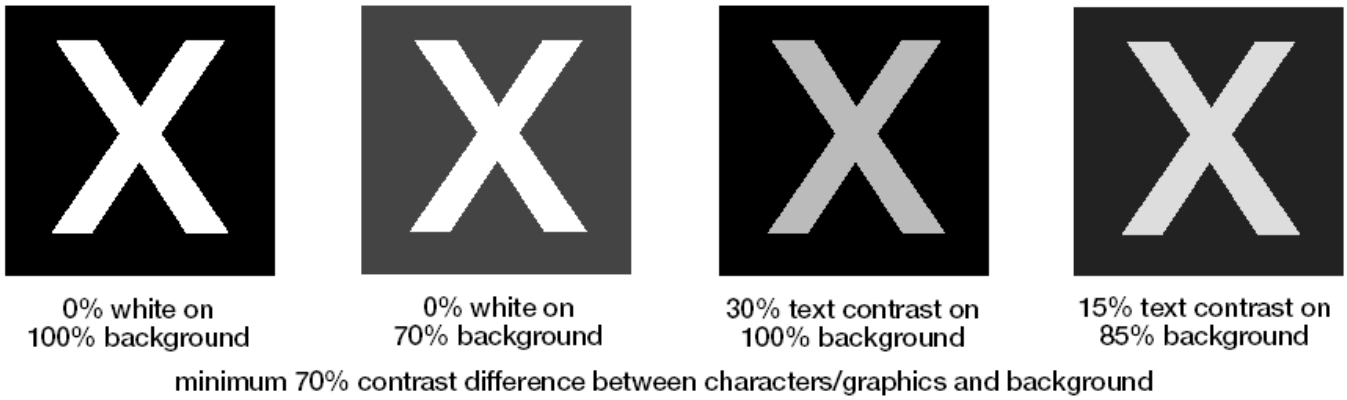

Fig 17-D. Contrast

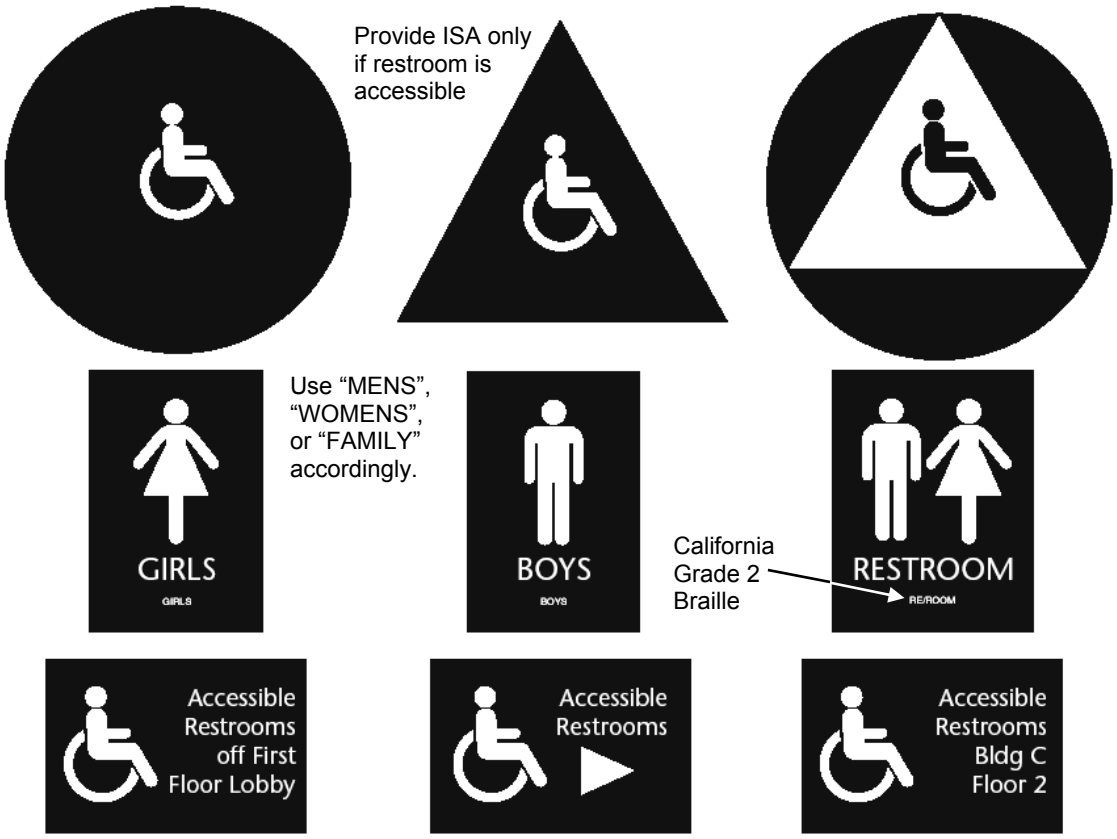

Fig 17-E. Recommended Restroom Signage

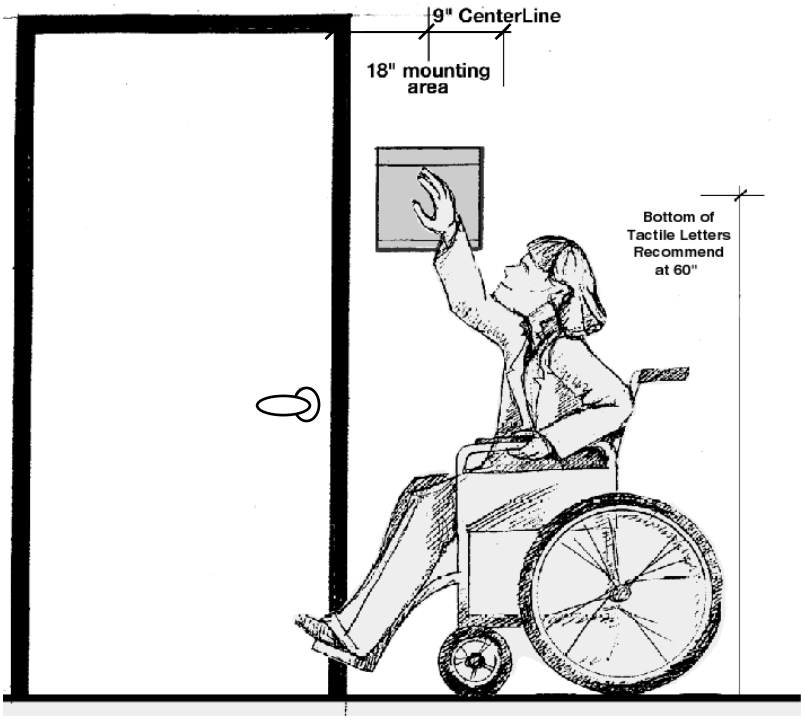

Fig 17-F. Mounting Height

18	Project designer (PD) shall address the following marked or circled items, and any additional plan review comments on drawings and specifications before scheduling a back check appointment for access compliance (AC). Any questions or points of disagreement must be resolved prior to back check by fax to plan reviewer (PR).		Justification, Reference, or Code Citation (C.C.R. Title 24, u.o.n.)	Location of Item on Plans	Comments Notes Examples

Check List 18. ASSEMBLY USE AREAS

18.1	For additional scoping requirements and exceptions see also applicable **DSA/AC Preliminary Review Checklists** and **Checklist 1.**				
18.2	For the purpose of Access Compliance review only: Regardless of occupancy load or classification, the requirements of CBC 1104B are not limited to Group A facilities or portions of facilities but do also apply to any facility or portion of facility which is used, either full-time or part time, or can be characterized as an assembly area.				DEFINITION: "Assembly Area" is a room or space accommodating a group of individuals for recreational, educational, political, social, civic, or amusement purposes, or for the consumption of food and drink.
ASSISTIVE LISTENING SYSTEMS (ALS)					
18.3	Provide and indicate an ALS in all assembly areas, conference rooms, and meeting areas that are affected by project scope, whether device is in this contract or provided by the owner:				NOTE: If ALS is N.I.C. or to be provided by owner, state so on the plan and provide specs for equipment.
18.4	Provide and indicate a permanently installed assistive listening system in this space/room if: **1.** The space/room accommodates at least 50 persons, or has an audio-amplification system, and **2.** The space/room has fixed seating.		1104B.2 ADAAG 4.1.3(19)(b)		
18.5	Provide and indicate a portable or permanently installed assistive listening system in this space/room.				NOTE: Portable ALS may serve more than one space/room.
18.6	Indicate location of ALS sign on plan for each space/room required to be equipped with an ALS and indicate text. This requirement applies even if the system is N.I.C. 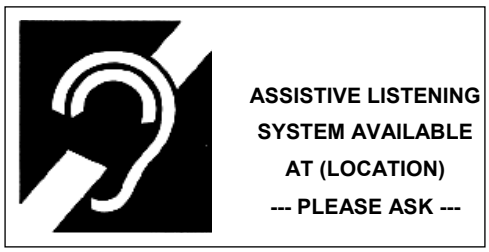 **ASSISTIVE LISTENING SYSTEM AVAILABLE AT (LOCATION) --- PLEASE ASK ---**				Recommendation: Indicate location of ALS headsets on sign.
18.7	Reference detail of ALS signage.				
18.8	Provide ratio table for each space/room, indicating total number of seats and number of personal receivers required (4% min but never less than 2 receivers).		1104B.2.1		
18.9	Specify type of ALS even if the system is N.I.C. (See http://www.access-board.gov/publications/9-als/index.htm for an explanation of the different types available.)				

Project designer (PD) shall address the following marked or circled items, and any additional plan review comments on drawings and specifications before scheduling a back check appointment for access compliance (AC). Any questions or points of disagreement must be resolved prior to back check by fax to plan reviewer (PR).

	Justification, Reference, or Code Citation (C.C.R. Title 24, u.o.n.)	Location of Item on Plans	Comments Notes Examples

Check List 18. ASSEMBLY USE AREAS

AUDITORIUMS, ASSEMBLY HALLS, THEATERS, AND RELATED FACILITIES

18.10 Provide a seating layout plan.

18.11 Where fixed or semi-permanent seating is provided identify on seating layout plan the location of:

1. Wheelchair spaces (show 33”x48” or 33”x60”).
2. Companion seats (e.g., mark seat with a “C”).
3. Semi-ambulant seats (e.g., mark seat with a “S”).
4. Transfer or aisle seats (e.g., mark seat with a “T”).

Note:
Companion seats cannot be included in the count for semi-ambulant seats

18.12 Provide ratio table indicating total number of seats and number of wheelchair spaces, companion seats, semi-ambulant seats, and transfer seats.

1104B.3.4.1
1104B.3.8

Seating Capacity	W	C	S	T	ALS Receiver
4 to 26	1	1	2	1	2
27 to 50	2	2	2	1	2
51 to 200	4	4	2	1	4%
201 to 300	4	4	3	2	4%
301 to 500	6	6	1%	1%	4%
599	6	6	6	6	24
600	7	7	6	6	24
601	7	7	7	7	25

18.13 Indicate slope at wheelchair space to be 2% max.

18.14 Indicate size of wheelchair space to be:

1. 33”x48” for front or rear access.
2. 33”x60” for side access.

18.15 Indicate one companion seat next to each wheelchair seat. Companion seat must be integrated with the seating for the general public and of the same style and type. If fixed seating is provided, companion seat must be fixed too.

18.16 Companion seat must be located 12” from the back end of the wheelchair space to allow shoulder-to-shoulder seating.

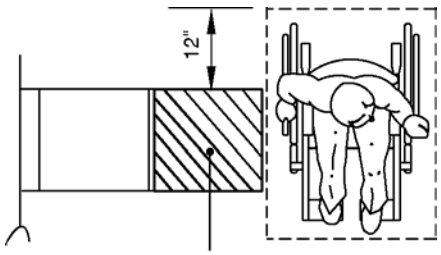

COMPANION SEAT

© 2003 DSA/OUD

Project designer (PD) shall address the following marked or circled items, and any additional plan review comments on drawings and specifications before scheduling a back check appointment for access compliance (AC). Any questions or points of disagreement must be resolved prior to back check by fax to plan reviewer (PR).

Check List 18. ASSEMBLY USE AREAS

		Justification, Reference, or Code Citation (C.C.R. Title 24, u.o.n.)	Location of Item on Plans	Comments Notes Examples
18.17 Provide detail (1/4" scale) of area, showing all relevant dimensions, including wheelchair maneuvering space, all adjacent slopes and level changes, and required egress routes.				
18.18 Provide additional space in front or behind designated wheelchair space to ensure safe and convenient access and egress for the person using a wheelchair and the general public.				
18.19 Semi-ambulant seating must provide 24" clear leg room from the front edge of the seat to the nearest obstruction. 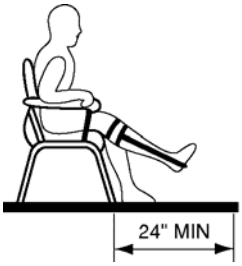				
18.20 Provide a reasonable portion of transfer seats on or adjacent to a wheelchair accessible route.				NOTE: Transfer seats are intended to facilitate seating of wheelchair users who wish to transfer to existing seating during an event when fixed seating is provided. Many persons who use wheelchairs are able to transfer to fixed seating with this relatively minor modification.
18.21 Indicate removable armrest and sign at transfer seat.				
18.22 Where total seating capacity exceeds 300, provide accessible wheelchair seating in more than one location.				
18.23 Rearrange seating layout to provide integral seating for people using wheelchairs and their companions.				
18.24 Rearrange seating layout to provide choice of admission prices and lines of sight for people using wheelchairs and their companions.				
18.25 Provide elevation or section to indicate how lines of sight requirement is met.		1104B.3.5		
18.26 Where spectators are expected to remain seated during events, spectators seated in wheelchairs must be provided with lines of sight to the performance area or playing field comparable to that provided to spectators in the seating area in closest proximity to the location of the wheelchair spaces, but not in the same row.				

© 2003 DSA/OUD

Project designer (PD) shall address the following marked or circled items, and any additional plan review comments on drawings and specifications before scheduling a back check appointment for access compliance (AC). Any questions or points of disagreement must be resolved prior to back check by fax to plan reviewer (PR).

	Justification, Reference, or Code Citation (C.C.R. Title 24, u.o.n.)	Location of Item on Plans	Comments Notes Examples

Check List 18. ASSEMBLY USE AREAS

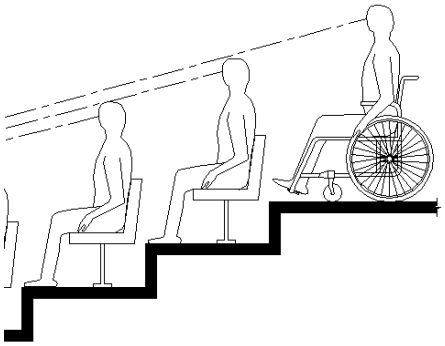

18.27 Where people will be expected to stand at their seats during events, wheelchair spaces shall be located so that they will provide people seated in wheelchairs with lines of sight of the performance area or playing surface over standing spectators comparable to that provided to standing spectators in the seating area in closest proximity to the wheelchair spaces, but not in the same row

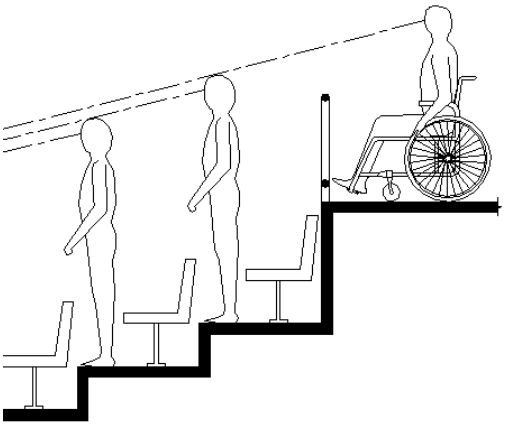

18.28 If removable seats are planned, indicate on plan assigned storage space for removable seats.

18.29 Provide in the specifications a note stating that contractor should not install removable seats but to store them in the designated area.

NOTE:
Public entities must keep wheelchairs spaces free from removable seats in all but the most unusual cases (e.g., if an event is sold out and there were no requests for wheelchair spaces, removable seats can be installed and sold to non-disabled patrons).

18.30 Provide and indicate POT from wheelchair space to performing areas, including stages, arena floors, dressing rooms, locker rooms and other spaces used by performers, and public restrooms.

1104B.3.10
1104B.3.13

18.31 Stages, enclosed and unenclosed platforms, orchestra pits and preparation areas must be made accessible.

1104B.3.11

EXCEPTION:

a. When DSA finds that requiring compliance for an enclosed or unenclosed platform or depressed area not more than 24” above or below an adjacent accessible level, would

© 2003 DSA/OUD

		Justification, Reference, or Code Citation (C.C.R. Title 24, u.o.n.)	Location of Item on Plans	Comments Notes Examples
Check List 18. ASSEMBLY USE AREAS				
create an unreasonable hardship, the enclosed and unenclosed platform or depressed area must be made accessible by a portable ramp with a slope not exceeding 8.3%. b. In existing buildings, when DSA determines that compliance would create an unreasonable hardship, an exception may be granted when equivalent facilitation is provided.				
18.32 Employee and customer side of all ticket booths, refreshment and concession stands must be made accessible.		1104B.3.12		
18.33 Provide enlarged detail and elevations for ticket booth, refreshment and concession stands.				
18.34 Provide signage at ticket office that notifies customers of the availability of the different types of accessible seating and assistive listening devices.		ADAAG 4.1.3(19)(a)		
18.35 In outdoor assembly use areas (e.g. amphitheater type seating on turf) provide required ratio of wheelchair and companion seat spaces, located on a POT.				
18.36 Recommendation: In amphitheaters, provide transfer platform if seating is on turf.				
18.37 In amphitheaters, provide warning curb where abrupt changes in level between the POT and adjacent seating areas exceed 4” in height.		1133B.8.1		
18.38 Provide perimeter guardrails, or walls, or fences (42” min high) at all elevated seating areas that are more than 30” AFF. EXCEPTION: a. Guardrails at the front of the front row of seats that are not located at the end of an aisle and where there is no cross aisle may have a height of 26” and need not meet the 4”, however, a midrail shall be installed.		1133B.5.7.5		
STADIUMS, GRANDSTANDS, BLEACHERS, ATHLETIC PAVILIONS, GYMNASIUMS AND MISCELLANEOUS SPORT–RELATED FACILITIES.				
18.39 Accessible seating for stadiums, grandstands, bleachers, athletic pavilions, gymnasiums and miscellaneous sport–related facilities must comply with 1104B.3 and items **18.10 through 18.30** of this Checklist. EXCEPTION: a. At folding bleachers where wheelchair spaces are provided by a cut back in the first rows, and when DSA finds that integrated companion fixed seats cannot be obtained the following design will be accepted:		1104B.4.1 DSA Policy #98-05		

		Justification, Reference, or Code Citation (C.C.R. Title 24, u.o.n.)	Location of Item on Plans	Comments Notes Examples
Check List 18.	**ASSEMBLY USE AREAS**			
	▪ Provide a 24”x48” clear space for companion seating next to each wheelchair space, with signage identifying it on the companion seat. ▪ Provide an ISA on the floor or on the front of the lowest bleacher row in front of space to identify the wheelchair space. ▪ The number of wheelchair accessible seats must be dispersed equally for each side (home and visitors) and cannot be clustered into one location for each side. b. At bleachers and grandstands, when DSA finds that the lines of sight or choice of admission price requirements for semi-ambulant seating would create unreasonable hardship, semi-ambulant seating may be provided in the first rows, if these seats are dispersed equally for each side (home and visitors) and not clustered into one location for each side. c. At bleachers and grandstands, when DSA finds that the lines of sight or choice of admission price requirements for transfer/aisle seating would create unreasonable hardship, transfer/aisle seating may be provided in the first rows, if these seats are dispersed equally for each side (home and visitors) and not clustered into one location for each side, and if there is a 30”x48” clear space for parallel transfer directly adjacent to the designated transfer/aisle seat.			
18.40	Customer side of all ticket booths, refreshment and concession stands must be made accessible.	1104B.4.2		
18.41	Recommendation: Employee side of all ticket booths, refreshment and concession stands should be made accessible.			
	EXCEPTION:			
	a. Employee side of all ticket booths, refreshment and concession stands in facilities that are used by state and local entities must be made accessible.	28 CFR 35.149		
18.42	Provide enlarged detail and elevations for ticket booth, refreshment and concession stands.			
18.43	Provide signage at ticket office that notifies customers of the availability of the different types of accessible seating and assistive listening devices.			
18.44	Provide and indicate a POT to all participation and activity areas, including the following: **1.** Tennis, racquetball and handball courts. **2.** Gymnasium floor areas and general exercise rooms. **3.** Basketball, volleyball and badminton courts, and bowling lanes. **4.** Swimming pool deck areas and swimming pools.	1104B.4.3, 4, 5		

Project designer (PD) shall address the following marked or circled items, and any additional plan review comments on drawings and specifications before scheduling a back check appointment for access compliance (AC). Any questions or points of disagreement must be resolved prior to back check by fax to plan reviewer (PR).

	Justification, Reference, or Code Citation (C.C.R. Title 24, u.o.n.)	Location of Item on Plans	Comments Notes Examples

Check List 18. ASSEMBLY USE AREAS

5. Athletic team rooms and facilities, playing fields and running tracks.

6. Club rooms (home and guest).

7. Sanitary and locker facilities (home and guest).

8. Baseball/softball player dugout.

18.45 Provide pool lift with ridged seat and arm rests or ramp to assist persons with disabilities to access and egress the swimming pool independently. Bring manufactures cut sheet to back check.

18.46 If removable lift is used, provide sign (incl. ISA) at a conspicuous location, indicating availability of lift.

18.47 General exception applicable to sanitary & locker facilities, covered by 1104B.5:

a. When DSA determines that compliance would create an unreasonable hardship, an exception may be granted when equivalent facilitation through the use of other methods or materials.

b. In existing buildings, when DSA determines that compliance would create an unreasonable hardship, an exception may be granted when all of the following minimum conditions are met:

- 1% of total seats are to be accessible if the seating capacity is less than 5000.
- 1% plus 1 seat for each additional 2000 seats when the capacity exceeds 5000.
- Sanitary facilities, ticket booths, clubrooms concession stands and refreshment facilities are accessible.
- One of each type of participation area is usable and accessible.

18.48 Provide vertical access to press boxes, announcer booths and similar facilities.

1114B.1.2
ADAAG
4.1.1(1)

EXCEPTION:

a. In alteration projects, where the existing press/announcer box is less than 400 square feet and has less than 30 lineal feet of observation counter space, and DSA determines that compliance would create an unreasonable hardship, an exception may be granted if an alternative, accessible press/announcer box is provided for individuals who cannot climb stairs that complies with the following minimum requirements:

- Provision of same equipment, video/audio jacks, and football & track scoreboard outlets.
- Provision of at least 3 workstations.
- Provision of same amenities (rain and wind shelter, HVAC, etc.).

© 2003 DSA/OUD

		Justification, Reference, or Code Citation (C.C.R. Title 24, u.o.n.)	Location of Item on Plans	Comments Notes Examples
Check List 18. ASSEMBLY USE AREAS				
▪ Unobstructed line of sight from a seated position (down, right, and left). ▪ Recommendation: Box should be elevated at least 18 inches above the playing field (reachable by ramp or sloped walk).				
18.49 Provide perimeter guardrails, or walls, or fences (42" min high) at all elevated seating areas that are more than 30" AFF. EXCEPTION: a. Guardrails at the front of the front row of seats that are not located at the end of an aisle and where there is no cross aisle may have a height of 26" and need not meet the 4", however, a midrail shall be installed.		1133B.5.7.5		
18.50 The open vertical space between footboards and seats shall not exceed 9" when footboards are more than 30" AFF. Modify footboard.		1133B.5.7.5		
DINING, BANQUET AND BAR FACILITIES				
18.51 All areas where each type of functional activity occurs must be made accessible. EXCEPTION: a. In alteration projects, where DSA determines that compliance would create an unreasonable hardship, an exception may be granted when equivalent facilitation is provided. b. In alteration projects, when legal or physical constraints would not allow compliance with these regulations or equivalent facilitation without creating an unreasonable hardship.		1104B.5.1 ADAAG 5.1		NOTE: Jurisdictional findings and determinations for exception (b) are subject to an internal DSA appeals process.
18.52 All floors, levels, and mezzanines of dining areas must be made accessible. EXCEPTION: a. In alteration projects, where DSA determines that compliance would create an unreasonable hardship, an exception is granted provided that: ▪ A minimum of 75% of the dining, banquet and bar area is on a common level or connected by pedestrian ramps, passenger elevators or special lifts, and, ▪ The same services and decor are provided in an accessible space usable by the general public and are not restricted to use by people with disabilities. b. Mezzanines in new construction of non-elevator buildings and where DSA determines that compliance would create an unreasonable hardship, an exception is granted provided that:		1120B.1.2 ADAAG 5.4		NOTE: Jurisdictional findings and determinations for exception (b) are subject to an internal DSA appeals process.

		Justification, Reference, or Code Citation (C.C.R. Title 24, u.o.n.)	Location of Item on Plans	Comments Notes Examples
Check List 18. ASSEMBLY USE AREAS				
▪ The area of mezzanine seating measures no more than 25 percent of the area of the total accessible seating area; and, ▪ The same services and decor are provided in an accessible space usable by the general public, and, ▪ The accessible areas are not restricted to use by people with disabilities.				
18.53 Provide and indicate one 30”x48” clear space for each 20 of total seats for each functional area.				
18.54 Provide enlarged detail and elevations of accessible section of fixed tables and counters and indicate surface top to be 34” max. Knee clearance at bars, counters, and tables must be at least 27”x30”x19”.		1122B		
18.55 Fixed tables and counters primarily used by children should be adjusted to meet their accessibility needs. See **Figure 15-A** in **Checklist 15** for suggested dimensions.				
18.56 Provide and indicate adequate maneuvering and passing space behind each wheelchair space.		Fig. 11B-13		
18.57 Wheelchair space must be integrated with general seating.				
18.58 Provide 36” clear POT to wheelchair seating space.				
18.59 Provide and indicate 36” min wide (42” preferred) food service aisles.				
18.60 At food service aisles, provide and indicate all tray slides to be 34” max AFF.		Fig. 11B-16		
18.61 Provide and indicate at least 50% of each type self-service shelves to be within reach ranges.		Fig. 11B-5C Fig. 11B-5D		
18.62 Indicate reach range dimensions for tableware, dishware, condiments, food and beverage display shelves, and dispensing devices.		Fig. 11B-17		
18.63 Provide and indicate accessible doors to all food preparation areas.				
18.64 Toilet, bathing, and locker facilities for food preparation employees must be made accessible.				
RELIGIOUS FACILITIES				
18.65 Provide and indicate access to sanctuaries, assembly areas, platforms, choir rooms, performing areas, and sanitary facilities. EXCEPTION:		1104B.6		

Project designer (PD) shall address the following marked or circled items, and any additional plan review comments on drawings and specifications before scheduling a back check appointment for access compliance (AC). Any questions or points of disagreement must be resolved prior to back check by fax to plan reviewer (PR).

	Justification, Reference, or Code Citation (C.C.R. Title 24, u.o.n.)	Location of Item on Plans	Comments Notes Examples

Check List 18. ASSEMBLY USE AREAS

a. In alteration projects, where DSA determines that compliance would create an unreasonable hardship, an exception may be granted when equivalent facilitation is provided.

18.66 Provide and indicate access to choir lofts.

EXCEPTION:

a. In alteration projects, where DSA determines that compliance would create an unreasonable hardship, an exception may be granted.

18.67 Provide and indicate accessible doors to all classrooms and offices.

© 2003 DSA/OUD

19	Project designer (PD) shall address the following marked or circled items, and any additional plan review comments on drawings and specifications before scheduling a back check appointment for access compliance (AC). Any questions or points of disagreement must be resolved prior to back check by fax to plan reviewer (PR).		Justification, Reference, or Code Citation (C.C.R. Title 24, u.o.n.)	Location of Item on Plans	Comments Notes Examples

Check List 19. BUSINESS AND MERCANTILE USE AREAS

19.1 For additional scoping requirements and exceptions see also applicable **DSA/AC Preliminary Review Checklists** and **Checklist 1.**

19.2 For the purpose of Access Compliance review only: Regardless of occupancy load or classification, the requirements of CBC 1105B and 1110B are not limited to Group B and M facilities or portions of facilities but do also apply to any facility or portion of facility which is used, either full-time or part time, or can be characterized as a business or mercantile area.

OFFICE BUILDINGS, PERSONAL AND PUBLIC SERVICE FACILITIES

19.3 The following areas in business and professional office facilities must be accessible: — 1105B.3.2

- **1** Client, visitor, office areas and related toilet facilities.
- **2** Conference rooms, counseling rooms or cubicles and similar areas.
- **3** Provide 36” min wide clear access to all employee work areas.
- **4** Professional medical and dental offices (see also **Checklist 21** for additional requirements.)

19.4 The following areas in personal and public service facilities areas must be accessible: — 1105B.3.3

- **1.** Client, visitor, office areas, and related toilet facilities.
- **2.** Provide 36” min wide clear access to all employee work areas.
- **3.** Automated teller machines used by a financial institution and its customers for the primary purposes of executing financial transactions.

19.5 The following areas in public utility facilities must be accessible: — 1105B.3.4

- **1.** Office areas, meeting rooms and similar areas, and related toilet rooms.
- **2.** Public tour areas, to the extent that such public tours are conducted through or about a facility, or where the public is permitted to walk in such areas.

  EXCEPTION:

  a. Facilities located in operational areas which would not have any reasonable availability to or usage by persons who use wheelchairs for mobility are not subject to the wheelchair accessibility requirements.
  b. When DSA determines that compliance would create an unreasonable hardship, an exception may be granted when equivalent facilitation is provided.

© 2003 DSA/OUD

Project designer (PD) shall address the following marked or circled items, and any additional plan review comments on drawings and specifications before scheduling a back check appointment for access compliance (AC). Any questions or points of disagreement must be resolved prior to back check by fax to plan reviewer (PR).

Check List 19. BUSINESS AND MERCANTILE USE AREAS

		Justification, Reference, or Code Citation (C.C.R. Title 24, u.o.n.)	Location of Item on Plans	Comments Notes Examples
	3. Visitor overlook facilities, orientation areas and similar public–use areas, and any sanitary facilities that serve these facilities.			
19.6	The following areas in police department, law enforcement, fire department facilities and courtrooms must be accessible:	1105B.3.5 ADAAG 12.1		
	1. Office areas, conference rooms, classrooms, dormitories, dispatch rooms and similar areas, along with related sanitary facilities.			
	2. 5% but never less than one individual meeting area in detention–visitor rooms (both sides).			
	3. 2% but never less than one detention cell facility of each type with supporting sanitary facilities.			
	4. Courtroom areas, including the judge's chambers and bench, counsel tables, jury box, witness stand and public seating area.			
19.7	The following areas in sales facilities must be accessible:	1110B.1.1		
	1. General sales, display, and office areas, along with related sanitary facilities.			
19.8	Provide wheelchair access to employee side of sales work station.	1110B.1.2		
19.9	Provide and indicate the top of all sales and service counters, teller windows, and information counters to be 34" max AFF for a length of 36" min on the customer side.	1110B.1.2 ADAAG 7.2		
	EXCEPTION:			
	a. Where seated service is provided, for example in banks, insurance offices, travel agencies, etc, counters and fixed tables must provide knee and toe clearances. b. At checkstands (see 1110B.1.3 for requirements)			
19.10	Theft-prevention barriers and any device used to prevent the removal of shopping carts from store premises cannot limit access or egress to people in wheelchairs. Provide accessible entry that is equally convenient to that provided for the general public.	1110B.1.6 ADAAG 7.4		
19.11	Provide and indicate 5% but never less than one accessible fitting or dressing room for each type of use in each cluster of dressing rooms.			
19.12	Identify type of use of each dressing room on floor plan (e.g., customer, staff, male, female, family, etc).			
19.13	Provide enlarged plan and elevations for accessible dressing rooms and indicate the following:	1110B.1.7 ADAAG 4.35		
	1. Accessible door or curtain.			

© 2003 DSA/OUD

Project designer (PD) shall address the following marked or circled items, and any additional plan review comments on drawings and specifications before scheduling a back check appointment for access compliance (AC). Any questions or points of disagreement must be resolved prior to back check by fax to plan reviewer (PR).

		Justification, Reference, or Code Citation (C.C.R. Title 24, u.o.n.)	Location of Item on Plans	Comments Notes Examples
Check List 19. BUSINESS AND MERCANTILE USE AREAS				
2. Full-length mirror, 18”x54” min, bottom at 20” max AFF, and positioned to afford a view to a person on the bench as well as to a person standing.				
3. Clothing hook at 48” max AFF.				
4. Bench or section of bench close, measuring 24” deep, 48” wide, and 18” high, and fixed to a wall along the longer dimension.				
5. 60” square clear space in front of the accessible bench section, located in such a manner to allow a person using a wheelchair to make a parallel transfer onto the bench. (Door cannot swing into this square.)				
6. Recommendation: Provide ISA on outside of door to accessible dressing room.				
7. Recommendation: Provide vertical grab bar (24” long) installed in front of the front edge of the bench but within reach range of a person sitting on the bench.				
19.14 Provide and indicate the following minimum circulation aisle and pedestrian way widths at all areas with fixed displays:		1004.3.2.2.2 1105B.3.6.1 1110B.2.1 ADAAG 4.1.3(12)(b)		
1. 36” min if displays and similar fixtures or equipment are placed on only one side of the aisle.				
2. 44” min if displays and similar fixtures or equipment are placed on both sides of the aisle.				
19.15 Provide and indicate the following minimum circulation aisle and pedestrian way widths at all areas with non-fixed displays or displays that are N.I.C. to inform the owner of aisle width requirements at displays:		1004.3.2.2.2 1105B.3.6.1 1110B.2.1		
1. 36” min if displays and similar fixtures or equipment are placed on only one side of the aisle.				
2. 44” min if displays and similar fixtures or equipment are placed on both sides of the aisle.				
19.16 Provide and indicate 32” min clear door opening at all storage areas.		1105B.3.6.2 1110B.2.2 1125B		

© 2003 DSA/OUD

20	Project designer (PD) shall address the following marked or circled items, and any additional plan review comments on drawings and specifications before scheduling a back check appointment for access compliance (AC). Any questions or points of disagreement must be resolved prior to back check by fax to plan reviewer (PR).		Justification, Reference, or Code Citation (C.C.R. Title 24, u.o.n.)	Location of Item on Plans	Comments Notes Examples

Check List 20. EDUCATIONAL USE AREAS

20.1	For additional scoping requirements and exceptions see also applicable **DSA/AC Preliminary Review Checklists** and **Checklist 1.**				
20.2	For the purpose of Access Compliance review only: Regardless of occupancy load or classification, the requirements of CBC 1106B are not limited to Group E facilities or portions of facilities but do also apply to any facility or portion of facility which is used, either full-time or part time, or can be characterized as an educational use area.				
20.3	All laboratories, prep rooms, dark rooms, computer rooms, equipment rooms, teaching facility cubicles, study carrels, and libraries must be made accessible. EXCEPTION: a. In existing buildings where DSA determines that compliance would create an unreasonable hardship, an exception may be granted when equivalent facilitation is provided. b. In existing buildings where DSA determines that, due to legal or physical constraints, compliance with the height requirement or equivalent facilitation would create an unreasonable hardship.		1106B.1		NOTE: Jurisdictional findings and determinations for exception (b) are subject to an internal DSA appeals process. (see also item **G18** in **Checklist 1**)
LABORATORIES (LABs)					
20.4	Provide and indicate 5%, but never less than one accessible workstation of each type of use in labs, science, home economics and other similar specialized classrooms.				
20.5	Provide and indicate at least one teaching or demonstration station to be accessible.				
20.6	Provide and indicate 5%, but never less than one accessible workstation of each type of use in laboratory preparation rooms, supply rooms, dry rooms, cold rooms, walk-in freezers, sterile rooms small research laboratories, and areas containing specialized equipment not readily usable by persons with particular disabilities. EXCEPTION: a. Where DSA determines that compliance would create an unreasonable hardship, such facilities need not be made fully accessible, except that a clear width of 32” must be maintained into such rooms.		1106B.2		
20.7	Provide and indicate at least one of each type of sink and other specialized equipment such as fume hoods, microscopes, emergency eyewash and showers, etc, associated with the special use activity to be accessible.				

© 2003 DSA/OUD

Project designer (PD) shall address the following marked or circled items, and any additional plan review comments on drawings and specifications before scheduling a back check appointment for access compliance (AC). Any questions or points of disagreement must be resolved prior to back check by fax to plan reviewer (PR).

Check List 20. EDUCATIONAL USE AREAS

		Justification, Reference, or Code Citation (C.C.R. Title 24, u.o.n.)	Location of Item on Plans	Comments Notes Examples
20.8	Provide floor plan and indicate: **1.** All workstations and equipment. **2.** 30”x48” clear space at each accessible workstation and at accessible equipment. **3.** Aisle width, maneuvering and turning clearances from room entry to all accessible elements.			
20.9	Integrate accessible workstations with standard workstations.			
20.10	Disperse accessible student workstations, where more than one is accessible.			
20.11	Provide and indicate minimum knee clearance at workstation or equipment of 27” high, 30” wide, and 19” deep.	1122B.3		
20.12	Provide and indicate height of accessible work surface depending of the type of use: **1.** Between 28” and 34” AFF. **2.** Recommendation: Provide 28” to 31” for fine motor activities (writing, conducting experiments, drafting). **3.** Recommendation: Provide 31” to 34” for gross motor activities (transactions, activities at sinks, display, storing).	1122B.4 ADAAG A4.32.4		
20.13	Provide elevation or manufacturer’s cut sheet for accessible fume hood indicating knee clearance and height of operable parts and controls to be 48” max AFF.			
20.14	Provide elevation or manufacturer’s cut sheet for accessible emergency shower indicating height of operable parts and controls (e.g., pull-handle) to be 48” max AFF.			
20.15	Provide elevation or manufacturer’s cut sheet for accessible emergency eyewash indicating centerline of bubbler to be 36” max AFF (see figure 20-B of this checklist)			
20.16	Indicate 48” min aisle width for sink back-up space.			
20.17	Provide and indicate reach range dimensions for gas/air/water outlets.			
20.18	Provide and indicate lever-action faucets at gas/air/water outlets.			
TEACHING FACILITY CUBICLES, STUDY CARRELS, COMPUTER CLASSROOMS, AND DARKROOMS.				
20.19	Provide and indicate 5%, but never less than one accessible workstation of each type of use at the following teaching facilities: **1.** Cubicles and study carrels.	1106B.3		

© 2003 DSA/OUD

Project designer (PD) shall address the following marked or circled items, and any additional plan review comments on drawings and specifications before scheduling a back check appointment for access compliance (AC). Any questions or points of disagreement must be resolved prior to back check by fax to plan reviewer (PR).

	Justification, Reference, or Code Citation (C.C.R. Title 24, u.o.n.)	Location of Item on Plans	Comments Notes Examples

Check List 20. EDUCATIONAL USE AREAS

2. Computer stations.

3. Language.

4. Medical and dental stations.

5. Audio-visual.

6. Typing, drafting.

7. Painting, sculpting, and ceramics studios.

8. Vocational, wood, and metal shops, including spray booth.

9. Darkrooms.

20.20 Provide and indicate at least one teaching or demonstration station to be accessible.

20.21 Provide floor plan and indicate:

1. All workstations and equipment.

2. 30”x48” clear space at each accessible workstation and at accessible equipment.

3. Knee clearance and reach ranges, if applicable.

4. Aisle width, maneuvering and turning clearances from room entry to all accessible elements.

20.22 Provide accessible door at darkroom.

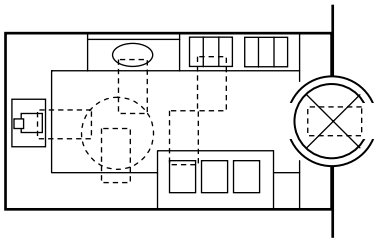

Compliant Darkroom

60” turning radius, 30”x48” clear space and knee clearance at each different type of equipment, door opening 32”, inner diameter of door 57” clear provided.

LIBRARIES

20.23 Provide and indicate 5%, but never less than one accessible library workstation of each type of use in each area, including:

1106B.3
ADAAG 8.2

1. Cubicles, reading and study carrels.

2. Computer stations.

20.24 Provide floor plan and indicate:

1. Service, information, and checkout counters.

2. Book drop.

© 2003 DSA/OUD

Project designer (PD) shall address the following marked or circled items, and any additional plan review comments on drawings and specifications before scheduling a back check appointment for access compliance (AC). Any questions or points of disagreement must be resolved prior to back check by fax to plan reviewer (PR).

	Justification, Reference, or Code Citation (C.C.R. Title 24, u.o.n.)	Location of Item on Plans	Comments Notes Examples

Check List 20. EDUCATIONAL USE AREAS

3. Book stacks, shelves, display tables and cabinets, card files, etc.

4. Aisle widths, maneuvering and turning clearances throughout the public area.

5. All workstations and equipment, including copying machines.

20.25 Indicate height of counter/table top to be 34” max AFF.

20.26 Indicate book-drop at 48” max AFF (36” preferred).

20.27 Bookshelves must be 54” AFF or less.

EXCEPTION:

a. When an attendant is available at all times to assist persons with disabilities to retrieve books, shelves may be located higher than 54” AFF. — 1106B.4.3

20.28 Card catalogs and magazine displays must be 48” max AFF for front reach and 54” max AFF for side reach (48” preferred).

20.29 Indicate 44” min width for all main aisles.

20.30 Indicate 36” min width for all side, range, and end aisles.

NOTE: Depending on the occupancy load, Chapter 10 may require wider aisles.

20.31 Dead-end aisles cannot be longer than 20’. — 1004.3.2.4

20.32 Provide and indicate the following dimensions when turning around bookshelves:

1. 90 degree turns can be made from a 36” wide aisle into another 36” aisle if the depth of the bookshelf is >48” on the inside dimensions of the turn. — 11B-5E

2. U-turns around bookshelves less than 48” wide can be made if the aisle width is 42” min and the base of the U-turn space is 48” min. wide.

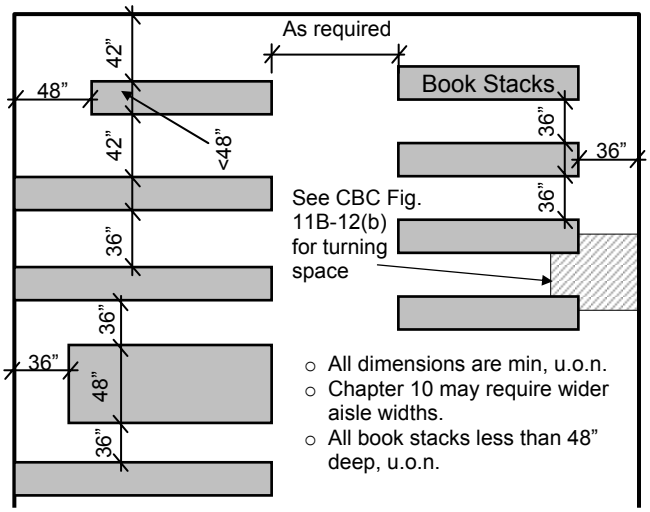

20	Project designer (PD) shall address the following marked or circled items, and any additional plan review comments on drawings and specifications before scheduling a back check appointment for access compliance (AC). Any questions or points of disagreement must be resolved prior to back check by fax to plan reviewer (PR).		Justification, Reference, or Code Citation (C.C.R. Title 24, u.o.n.)	Location of Item on Plans	Comments Notes Examples

Check List 20. EDUCATIONAL USE AREAS

PLAYGROUNDS

20.33 Provide and indicate POT to playground.

20.34 Provide and indicate POT from playground area to play equipment.

20.35 Provide and indicate accessible playground equipment as required by federal guidelines (see http://www.access-board.gov/play/finalrule.htm).

20.36 Provide and indicate destination material around playground equipment, to comply with the following standard, referenced by the federal guidelines (ADAAG 15.6):

- ASTM F 1487-98 Standard Consumer Safety Performance Specification for Playground Equipment for Public Use
- ASTM F 1951-99 Standard Specification for Determination of Accessibility of Surface Systems Under and Around Playground Equipment
- ASTM F 1292-99 Standard Specification for Impact Attenuation of Surface Systems Under and Around Playground Equipment

20.37 Recommendation: Provide all rubber surfaces around play equipment.

20.38 Provide transfer platform for each type of play equipment (24”x14” min) with the longer side adjoining a wheelchair space that is level, stable and firm.

20.39 Indicate transfer platform height (suggested: 12” for kindergarten and 15” for elementary).

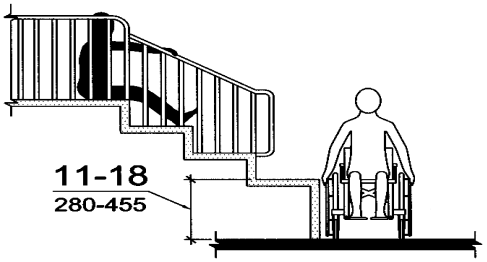

(a)

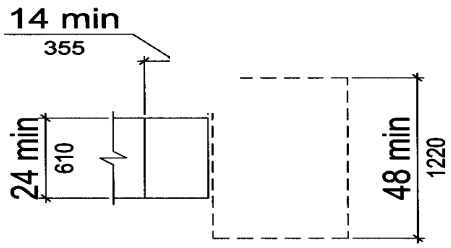

NOTE:
A new supplement to ADAAG covering play areas references several standards from the American Society for Testing and Materials (ASTM). The definition of "Use Zone" in ADAAG 3.5 relies on the ASTM F 1487-98 Standard Consumer Safety Performance Specification for Playground Equipment for Public Use. ADAAG 15.6.7 requires that ground surfaces along accessible routes, clear floor or ground spaces, and maneuvering spaces within play areas comply with the ASTM F 1951-99 Standard Specification for Determination of Accessibility of Surface Systems Under and Around Playground Equipment. The ground surfaces must be inspected and maintained regularly and frequently to ensure continued compliance with this standard. If located within use zones, the ground surfaces also must comply with the ASTM F 1292-99 Standard Specification for Impact Attenuation of Surface Systems Under and Around Playground Equipment.

American Society for Testing and Materials (ASTM)
100 Bar Harbor Drive
West Conshohocken, PA 19428-2959
(610) 832-9585, Fax: (610) 832-9555
Copies also can be ordered from Techstreet.

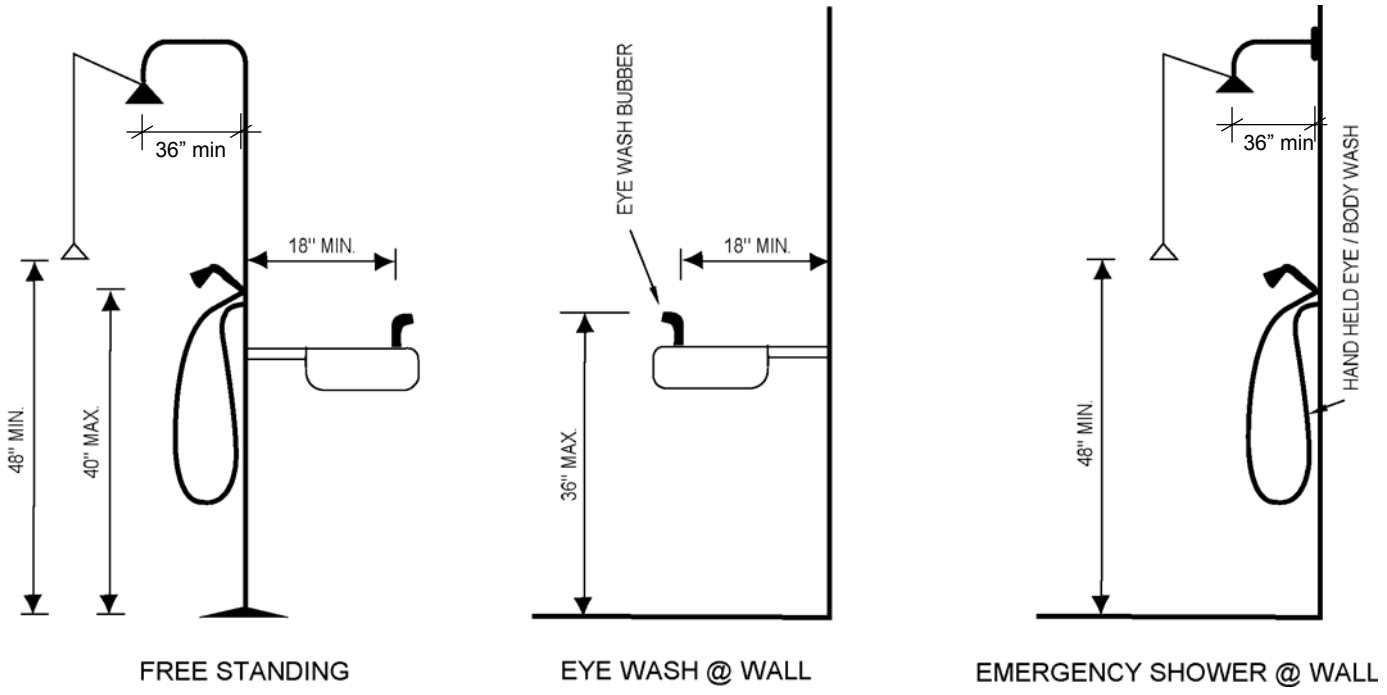

Fig 20-A. Emergency Eyewash and Shower

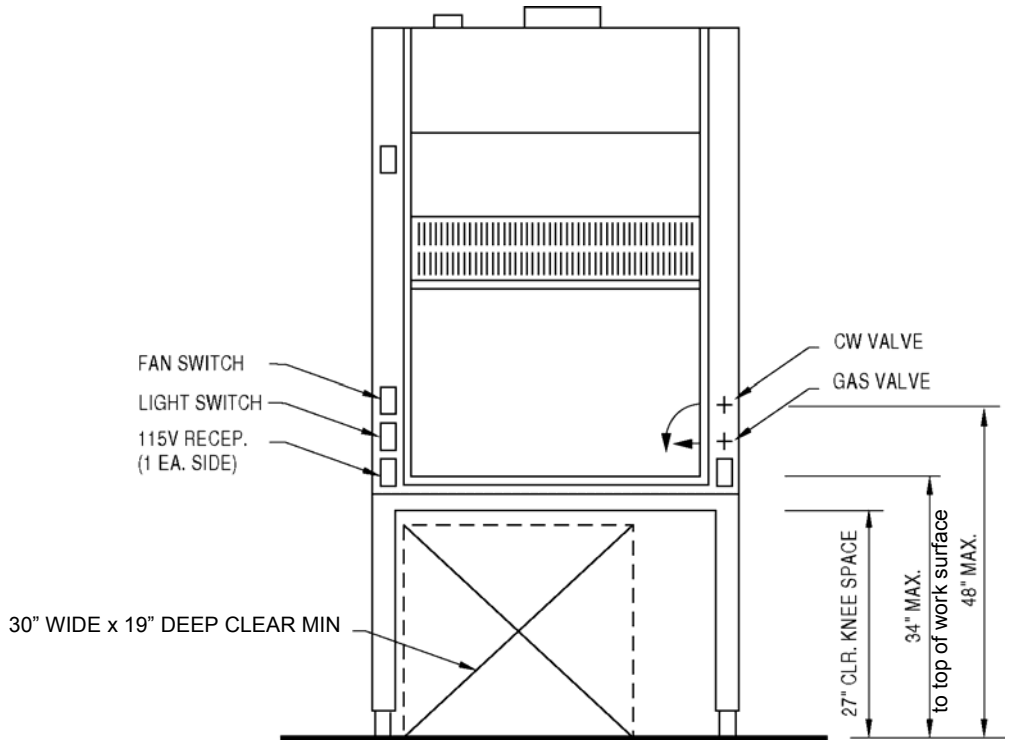

Fig 20-B. Accessible Fumehood

21	Project designer (PD) shall address the following marked or circled items, and any additional plan review comments on drawings and specifications before scheduling a back check appointment for access compliance (AC). Any questions or points of disagreement must be resolved prior to back check by fax to plan reviewer (PR).		Justification, Reference, or Code Citation (C.C.R. Title 24, u.o.n.)	Location of Item on Plans	Comments Notes Examples
	Check List 21. INSTITUTIONAL USE AREAS				
21.1	For additional scoping requirements and exceptions see also applicable **DSA/AC Preliminary Review Checklists** and **Checklist 1.**				
21.2	For the purpose of Access Compliance review only: Regardless of occupancy load or classification, the requirements of CBC 1109B are not limited to Group I facilities or portions of facilities but do also apply to any facility or portion of facility which is used, either full-time or part time, or can be characterized as an institutional use area.				
21.3	All skilled nursing, long-term-care, intermediate care, bed and care, nursing homes, hospitals, clinics, trauma center, psychiatric, detoxification, and rehabilitation facilities must be made accessible.		1109B.1 ADAAG 6.1		
	EXCEPTION:				
	a. In existing buildings where DSA determines that compliance would create an unreasonable hardship, an exception may be granted when equivalent facilitation is provided. Equivalent facilitation in alterations or additions must provide for the following:				
	When patient bedrooms are being added or altered as part of a planned renovation of an entire wing, a department, or other discrete area of an existing medical facility, a percentage of the patient bedrooms that are being added or altered must be made accessible. The percentage of accessible rooms provided must be consistent with the percentage of rooms required to be accessible by the applicable requirements of 1109B.3 until the number of accessible patient bedrooms in the facility equals the overall number that would be required if the facility were newly constructed. Where toilet/bathrooms are part of patient bedrooms which are added or altered and required to be accessible, each such patient toilet/bathroom must be made accessible.		ADAAG 6.1(4)		
	When patient bedrooms are being added or altered individually, and not as part of an alteration of the entire area, the altered patient bedrooms must be made accessible unless either a) the number of accessible rooms provided in the department or area containing the altered patient bedroom equals the number of accessible patient bedrooms that would be required if the percentage requirements 1109B.3 were applied to that department or area, or b) the number of accessible patient bedrooms in the facility equals the overall number that would be required if the facility were newly constructed. Where toilet/bathrooms are part of patient bedrooms which are added or altered and required to be accessible, each such toilet/bathroom must be made accessible.				
21.4	At outpatient units or facilities providing medical care or services to persons with mobility impairments 10% of the total number of parking spaces must be accessible.		1129B.3.1		

© 2003 DSA/OUD

Project designer (PD) shall address the following marked or circled items, and any additional plan review comments on drawings and specifications before scheduling a back check appointment for access compliance (AC). Any questions or points of disagreement must be resolved prior to back check by fax to plan reviewer (PR).

Check List 21. INSTITUTIONAL USE AREAS

		Justification, Reference, or Code Citation (C.C.R. Title 24, u.o.n.)	Location of Item on Plans	Comments Notes Examples
21.5	At facilities that specialize in the treatment of persons with mobility impairments 20% of the total number of parking spaces must be accessible.	1129B.3.2		
21.6	One in every eight accessible parking spaces must be van-accessible.			
21.7	Provide and indicate at least one accessible entrance that is protected from the weather by a canopy or roof, and which incorporates an accessible passenger loading zone. EXCEPTION: a. Clinics and other medical facilities that are not intended for patient stays of 24 hours or more and that are located above the first floor.	1009B.2		
21.8	Provide enlarged plan in 1/4" scale representing the actual layout of the accessible passenger loading zone, including associated entrances, sidewalks and curb ramps. Provide and indicate: **1.** 5'x20' (8'x20' preferred) access aisle adjacent and parallel to the vehicle pull–up space. **2.** Access aisle and vehicle pull–up space must be level (2% max.). **3.** A curb ramp, if there is a curb between the access aisle and the vehicle pull–up space, or if there is a curb between the access aisle and the POT. **4.** Vertical clearance of 114" min at one vehicle access route to such zones (from site entrances and exits). **5.** Design of identifying signage should be different than that used at accessible parking spaces (e.g., by providing a post-mounted sign with the ISA and stating "Passenger Loading Only – No Parking"). **6.** Indicate outline or canopy or roof on plan.			
21.9	All exterior and interior public use and common use areas, such as TV lounges, waiting rooms, offices, conference rooms, etc., must be made accessible.			
21.10	In long-term-care facilities (including skilled nursing, intermediate care, bed and care, and nursing homes) provide and indicate a minimum of 50% of patient bedrooms and toilet facilities to be accessible.	1009B.3.1		
21.11	In general purpose hospitals, psychiatric and detoxification facilities provide and indicate a minimum of 10% of patient bedrooms and toilet facilities to be accessible.	1009B.3.2		
21.12	In hospitals and rehabilitation facilities that specialize in treating conditions that affect mobility, or units within either that specialize in treating conditions that affect mobility provide and	1009B.3.3		

© 2003 DSA/OUD

Project designer (PD) shall address the following marked or circled items, and any additional plan review comments on drawings and specifications before scheduling a back check appointment for access compliance (AC). Any questions or points of disagreement must be resolved prior to back check by fax to plan reviewer (PR).

		Justification, Reference, or Code Citation (C.C.R. Title 24, u.o.n.)	Location of Item on Plans	Comments Notes Examples
Check List 21. INSTITUTIONAL USE AREAS				
indicate all patient bedrooms and toilet facilities to be accessible.				
21.13 In buildings that house offices and suites of physicians, dentists, etc., all such offices or suites, and their sanitary facilities, must be made accessible.		1109B.8		

© 2003 DSA/OUD

22	Project designer (PD) shall address the following marked or circled items, and any additional plan review comments on drawings and specifications before scheduling a back check appointment for access compliance (AC). Any questions or points of disagreement must be resolved prior to back check by fax to plan reviewer (PR).		Justification, Reference, or Code Citation (C.C.R. Title 24, u.o.n.)	Location of Item on Plans	Comments Notes Examples
	Check List 22. RESIDENTIAL USE AREAS				
22.1	A comprehensive checklist for residential use areas is currently being developed. In the meantime please refer to the following standards:				
	1. Title 24, Chapter 11A for new construction of privately funded, covered multifamily dwellings.		1102A.3C 101.17.9		
	2. Title 24, Chapter 11B for new construction, additions or alterations of publicly funded dwelling units.		1111B.5 101.17.11.1.3		
	3. Title 24, Chapter 11B for new construction, additions or alterations of dormitories.		1111B.4.7		
	4. Title 24, Chapter 11B for new construction, additions or alterations of transient lodgings.		1111B.4		

© 2003 DSA/OUD

23	Project designer (PD) shall address the following marked or circled items, and any additional plan review comments on drawings and specifications before scheduling a back check appointment for access compliance (AC). Any questions or points of disagreement must be resolved prior to back check by fax to plan reviewer (PR).		Justification, Reference, or Code Citation (C.C.R. Title 24, u.o.n.)	Location of Item on Plans	Comments Notes Examples

Check List 23. MISCELLANEOUS AND OTHER USE AREAS

23.1	For additional scoping requirements see also applicable **DSA/AC Preliminary Review Checklists** and **Checklists 1 through 24.**				
	FACTORY AND WAREHOUSE USE AREAS				
23.2	For the purpose of Access Compliance review only: Regardless of occupancy load or classification, the requirements of CBC 1107B are not limited to Group F facilities or portions of facilities but do also apply to any facility or portion of facility which is used, either full-time or part time, or can be characterized as factory or warehouse use area.				
23.3	All levels of multi-story factories and warehouses must be made accessible.		1107B		
	EXCEPTION:				
	a. In alterations when DSA determines that compliance would create an unreasonable hardship, and when equivalent facilitation is provided.				
	b. In non-occupiable spaces accessed only by ladders, catwalks, crawl spaces, very narrow passageways, tunnels, or freight (non-passenger) elevators, and frequented only by service personnel for maintenance, repair, or occasional monitoring of equipment; such spaces may include, but are not limited to, elevator pits, elevator penthouses, piping or equipment catwalks, water or sewage treatment pump rooms and stations, electric substations and transformer vaults, and highway and tunnel utility facilities.		ADAAG 4.1.1(5)(b)		
	c. In single occupant structures accessed only by a passageway that is below grade or that is elevated above standard curb height.				
	d. To levels in private facilities that are less than three stories or that have less than 3000 square feet per story.		ADAAG 4.1.3(5)		
	e. To levels in public facilities that are less than three stories and that are not open to the general public if the story above or below the accessible ground floor houses no more than five persons and is less than 500 square feet. Examples may include, but are not limited to, drawbridge towers and boat traffic towers, lock and dam control stations, and train dispatching towers.				
23.4	Factories must be made accessible as follows:		1107B.1		
	1. All major or principal floor areas must be made accessible.				
	2. All office areas must be made accessible.				
	3. All sanitary facilities serving these areas must be made accessible.				

© 2003 DSA/OUD

Project designer (PD) shall address the following marked or circled items, and any additional plan review comments on drawings and specifications before scheduling a back check appointment for access compliance (AC). Any questions or points of disagreement must be resolved prior to back check by fax to plan reviewer (PR).

Check List 23. MISCELLANEOUS AND OTHER USE AREAS

		Justification, Reference, or Code Citation (C.C.R. Title 24, u.o.n.)	Location of Item on Plans	Comments Notes Examples
23.5	Warehouses must be made accessible as follows: **1.** All warehousing areas which are located on the floor nearest grade and those areas on other floors that are otherwise provided with access by level entry, ramp or elevator must be made accessible. **2.** All office areas must be made accessible. **3.** All sanitary facilities serving these areas must be made accessible.	1107B.2		
HAZARDOUS USE AREAS				
23.6	For the purpose of Access Compliance review only: Regardless of occupancy load or classification, the requirements of CBC 1108B are not limited to Group H facilities or portions of facilities but do also apply to any facility or portion of facility which is used, either full-time or part time, or can be characterized as hazardous use area.			
23.7	Hazardous use area that are used by the public as customers, clients, visitors or which are potential places of employment must be made accessible. EXCEPTION: a. In alterations when DSA determines that compliance would create an unreasonable hardship, and when equivalent facilitation is provided. b. In existing buildings where DSA determines that, due to legal or physical constraints, compliance with the height requirement or equivalent facilitation would create an unreasonable hardship.	1108B.1		NOTE: Jurisdictional findings and determinations for exception (b) are subject to an internal DSA appeals process.
23.8	Provide and indicate accessible toilet and bathing facilities.	1108B.2		
23.9	Provide and indicate an accessible path of travel, including entrances, stairs, ramps, doors, turnstiles, corridors, walks and sidewalks.			
23.10	All floor and levels must be made accessible.			
23.11	Provide and indicate a 36” min wide POT and doors with 32” min clearance to all employee work areas.			
STORAGE AND UTILITY USE AREAS				
23.12	Storage and utility use area that are used by the public as customers, clients, visitors or which are potential places of employment must be made accessible.	101.17.11.2 1112B 1113B		

© 2003 DSA/OUD

Project designer (PD) shall address the following marked or circled items, and any additional plan review comments on drawings and specifications before scheduling a back check appointment for access compliance (AC). Any questions or points of disagreement must be resolved prior to back check by fax to plan reviewer (PR).

	Justification, Reference, or Code Citation (C.C.R. Title 24, u.o.n.)	Location of Item on Plans	Comments Notes Examples

Check List 23. MISCELLANEOUS AND OTHER USE AREAS

EXCEPTION:

a. In alterations when DSA determines that compliance would create an unreasonable hardship, and when equivalent facilitation is provided.

23.13 Provide and indicate at least one of each type of storage facility to be accessible. — 1125B.1

23.14 Provide and indicate POT to accessible storage units.

23.15 Provide and indicate accessible opening hardware at accessible storage units.

23.16 Provide and indicate accessible toilet and bathing facilities.

23.17 Provide and indicate a 36” min wide POT and doors with 32” min clearance to all employee work areas.

23.18 Public tour areas, to the extent that such public tours are conducted through or about a utility facility, or where the public is permitted to walk in such areas, must provide accessibility in those portions of the facility and grounds where this occurs. — 1105B.3.4.2

OUTDOOR USE AREAS

23.19 For the purpose of Access Compliance review only: Regardless of occupancy load or classification, the requirements of CBC 1132B are not limited to outdoor use areas or facilities but do also apply to any area, facility, or portion of facility which is used, either full-time or part time, or can be characterized as outdoor use area.

23.20 Outdoor use areas including naturally occurring public accommodations must be made accessible. — 1132B.1

23.21 Parks and Recreational areas and facilities must be made accessible. — 1132B.2

EXCEPTION:

a. In alterations when DSA determines that compliance would create an unreasonable hardship, and when equivalent facilitation is provided.
b. Where DSA finds that, in specific areas, the natural environment would be materially damaged by compliance; such areas shall be subject to these regulations only to the extent that such material damage would not occur.
c. Automobile access shall not be provided or paths of travel shall not be made accessible when DSA determines that compliance with these regulations would create an unreasonable hardship.

23.22 Provide and indicate a minimum of 3% but never less than 2 accessible campsites.

© 2003 DSA/OUD

23	Project designer (PD) shall address the following marked or circled items, and any additional plan review comments on drawings and specifications before scheduling a back check appointment for access compliance (AC). Any questions or points of disagreement must be resolved prior to back check by fax to plan reviewer (PR).		Justification, Reference, or Code Citation (C.C.R. Title 24, u.o.n.)	Location of Item on Plans	Comments Notes Examples
	Check List 23. MISCELLANEOUS AND OTHER USE AREAS				
23.23	Accessible campsite must be level and provide a firm and stable surface.				
23.24	Provide and indicate POT from accessible campsites to sanitary facilities.				
23.25	If permanent sanitary facilities are provided on this site, these must be made accessible to persons using wheelchair.				
23.26	All beaches, picnic areas, day use areas, vista points and similar areas must be made accessible.				
23.27	Boat docks, fishing piers, etc. must be made accessible.				
23.28	Trails and paths or portions of these, shall permit at least partial use by wheelchair occupants. Hard surface paths or walks shall be provided to serve all buildings and other functional areas.				
23.29	Provide and indicate running slopes or elevations points and cross slopes.				
23.30	Indicate and specify trail surface material.				
23.31	Nature trails and other similar educational or informational areas must be accessible to the blind with rope guidelines, raised Arabic numerals and symbols, informational signs and related guide and/or assistance devices.				
23.32	Highway rest areas and similar facilities must be made accessible as follows: **1.** Accessible sanitary facility for each sex. **2.** At least one accessible picnic table and one additional table for each 20 tables, or fraction thereof provided. **3.** Information and display areas. **4.** Hi-low drinking fountain. **5.** At least one van accessible parking space. **6.** Curb ramps conforming with 1127B.5 must be provided at pedestrian ways where appropriate.		1132B.3.1		

© 2003 DSA/OUD

24	Project designer (PD) shall address the following marked or circled items, and any additional plan review comments on drawings and specifications before scheduling a back check appointment for access compliance (AC). Any questions or points of disagreement must be resolved prior to back check by fax to plan reviewer (PR).		Justification, Reference, or Code Citation (C.C.R. Title 24, u.o.n.)	Location of Item on Plans	Comments Notes Examples
	Check List 24. QUALIFIED HISTORICAL BUILDINGS				
24.1	Secure documentation that verifies the project is a Qualified Historical Building or Property and submit along with plans for review.				
24.2	This checklist applies to every Qualified Historical Building, or Property, that is required to provide access to people with disabilities.		Title 24, Part 8, Chapter 6		
24.3	Design and construction must preserve the integrity of Qualified Historic Buildings and Properties, while providing access to, and use by people with disabilities. Every function or accommodation available to the general public must be accessible either directly or by alternatives as indicated below.				
24.4	Regular code for access for persons with disabilities shall be applied to Qualified Historical Buildings or Properties, unless strict compliance with the regular code will threaten or destroy the historical significance, or character defining features of the building or property.				
24.5	If the historical significance or character defining features are threatened, alternative provisions for access may be applied pursuant to this chapter, provided the following conditions are met:				
	1. Such alternative provisions shall be applied only on an item-by-item or a case-by-case basis.				
	2. The alternative provisions are applied according to the priorities outlined in Section 603 (of Part 8 of Title 24 listed below), whereby the alternative providing the greatest accessibility is listed first.				
	3. Documentation is provided stating the reasons for the application of the alternative provisions. Such documentation shall be maintained as a part of the public record.				
	4. If it is found that the application of the preferred alternatives listed in Section 603 threatens the historical significance or character defining features, the provisions of Sections 604 and 605 (of Part 8 of Title 24) may be applied.				
	5. A signature of approval from the applicable enforcement agency shall accompany any alternatives, equal facilitation designs, or exceptions agreed upon.				
24.6	The alternatives below each category are listed in order of priority. These alternatives apply only to the specific building standards listed below. All other related standards of regular code are not affected nor exempted.				
	1. Entry: These alternatives do not allow exceptions for the requirement of level landings in front of doors, except as provided in Section 603.3. Alternatives listed in order of priority are:				
	▪ Access to any entrance used by the general public and no further than 200’ from the primary entrance.				

© 2003 DSA/OUD

Project designer (PD) shall address the following marked or circled items, and any additional plan review comments on drawings and specifications before scheduling a back check appointment for access compliance (AC). Any questions or points of disagreement must be resolved prior to back check by fax to plan reviewer (PR).

	Justification, Reference, or Code Citation (C.C.R. Title 24, u.o.n.)	Location of Item on Plans	Comments Notes Examples

Check List 24. QUALIFIED HISTORICAL BUILDINGS

- Access at any entrance not used by the general public, but open and unlocked with directional signs at the primary entrance, and as close as possible to, but no further than 200’ from the primary entrance.

2. Doors. Alternatives listed in order of priority are:

- Single leaf door which provides 30” min clear opening.
- Single leaf door which provides 29 1/2"min clear opening.
- Double door; one leaf of which provides 29 1/2" min clear opening.
- Double doors operable with a power-assist device to provide a 29 1/2" min clear opening when both doors are in the open position.

3. Power-assisted Doors. A power-assisted door or doors may be considered an equivalent alternative to level landings, strike side clearance, and door-opening forces required by the regular code.

4. Toilet Rooms. In lieu of separate-gender toilet facilities as required in the regular code, an accessible unisex toilet facility may be designated.

5. Exterior and Interior Ramps and Lifts. Alternatives listed in order of priority are:

- A lift or a ramp of greater than standard slope, but no greater than 1:10 for horizontal distances, cannot exceed 12 feet. Signs shall be posted at upper and lower levels to indicate steepness of the slope.
- Access by ramps of 1:6 slope for horizontal distance, not to exceed 13”. Signs shall be posted at upper and lower levels to indicate steepness of the slope.
- Access is provided by experiences, services, functions, materials and resources through methods including; but not limited to; maps, plans, videos, virtual reality, and related equipment at accessible levels. This alternative shall be documented as required in Section 605.

6. Equivalent Facilitation. Use of other designs and technologies, or deviation from particular technical and scoping requirements, are permitted if the application of the alternative provisions contained in Section 603 would threaten or destroy the historical significance or character defining features of the building or site, or cause unreasonable hardship. Alternatives to Section 604 are permitted only where the following conditions are met:

- Such alternatives shall be applied only on an item-by-item or a case-by-case basis.
- The alternative design and/or technologies used will provide substantially equivalent or greater accessibility to, and usability of, the facility.

© 2003 DSA/OUD

Project designer (PD) shall address the following marked or circled items, and any additional plan review comments on drawings and specifications before scheduling a back check appointment for access compliance (AC). Any questions or points of disagreement must be resolved prior to back check by fax to plan reviewer (PR).

	Justification, Reference, or Code Citation (C.C.R. Title 24, u.o.n.)	Location of Item on Plans	Comments Notes Examples

Check List 24. QUALIFIED HISTORICAL BUILDINGS

- The official charged with the enforcement of the standards, shall document the reasons for the application of the alternative design and/or technologies, and their effect on the historical significance or character defining features. Such documentation shall be in accordance with Section 602.2, Item 3, and shall include the opinions and comments of state or local accessibility officials, and the opinions and comments of representative local groups of people with disabilities. Such documentation shall be recorded and entered into the permanent file of the enforcing agency.

7. Exceptions. If the historical significance or character defining features would be threatened or destroyed by the application of alternative access standards as provided by this chapter. No equivalent facilitation as provided in Section 604 is feasible. An exception from the literal requirements for full and equal access, or any alternative provisions, may be provided only if the following conditions are met

- Such exception is considered only on an item-by-item or case-by-case basis.
- Interpretive exhibits and/or equal services of the exempted significant historical aspects are provided for the public in a location fully accessible to, and usable by persons with disabilities; including people with hearing and sight impairment.
- Services are provided in an accessible location equal to those provided in the excepted location.
- The official charged with the enforcement of the standards shall document the reasons for the application of the alternative design and/or technologies, and their effect on the historical significance or character defining features. Such documentation shall be in accordance with Section 602.2, Item 3, and shall include the opinions and comments of state or local accessibility officials, and the opinions and comments of representative local patrons with disabilities. Such documentation shall be recorded and entered into the permanent file of the enforcing agency.

© 2003 DSA/OUD

25	Project designer (PD) shall address the following marked or circled items, and any additional plan review comments on drawings and specifications before scheduling a back check appointment for access compliance (AC). Any questions or points of disagreement must be resolved prior to back check by fax to plan reviewer (PR).		Justification, Reference, or Code Citation (C.C.R. Title 24, u.o.n.)	Location of Item on Plans	Comments Notes Examples
	Check List 25. SPECIFICATIONS				
25.1	For additional scoping requirements see also applicable **DSA/AC Preliminary Review Checklists** and **Checklists 1 through 24.**				
DIVISION 2, SITE WORK					
25.2	Specify Portland cement, concrete paving, and concrete finishes in POT to have heavy broom finish at slopes exceeding 6%, and medium broom finish at slopes up to 6%.		1133B.7.1		
25.3	Specify all gates, including ticket gates, to meet all applicable specifications for doors. Coordinate and specify height and type of hardware with door requirements.		1133B.1.1.1.4		
25.4	Specify 10” kick-plate at gate.				
DIVISION 8, DOORS & STOREFRONTS					
25.5	Specify thresholds in the path of travel in conformance with 1133B.2.4.1				
25.6	Specify closer-effort to be 5 lbs at exterior doors and interior doors per 1133B.2.5.				
25.7	Delete note that states that fire doors or rated doors can have up to 15 lbs operating effort, or provide the following note: “The Authority having Jurisdiction, may increase the maximum effort to operate fire doors to achieve positive latching, but not to exceed 15 lbs max.”				
25.8	Specify door closer to comply with 1133B.2.5.1, closer delay time.				
25.9	Where flush bolts occur in the POT, specify accessible flush bolt (automatic).				
25.10	Specify hand-activated hardware between 30” to 44” AFF; lever-type hardware, panic bars, push-pull activating; lever handle for thumb turn dead bolt per 1133B.2.5.1.				
25.11	Provide cut sheets for all door operating hardware at back check appointment.				
25.12	Provide cut sheets for darkroom doors.				

© 2003 DSA/OUD

25	Project designer (PD) shall address the following marked or circled items, and any additional plan review comments on drawings and specifications before scheduling a back check appointment for access compliance (AC). Any questions or points of disagreement must be resolved prior to back check by fax to plan reviewer (PR).		Justification, Reference, or Code Citation (C.C.R. Title 24, u.o.n.)	Location of Item on Plans	Comments Notes Examples

Check List 25. SPECIFICATIONS

DIVISION 9, FINISHES

25.13 Specify tile flooring to have minimum coefficient of friction 0.6 per ASTM 1028.

25.14 Specify resilient flooring to have minimum coefficient of friction of at least 0.5 per ASTM D2047.

25.15 Specify carpet to be securely attached to floor (glue-down preferred), firm or no pad, 1/2" max pile height, and level loop or cut pile.

25.16 Specify doormats to be securely fasten to floor at exposed edges.

25.17 Specify anchorage at recessed doormats per 1133B.1.1.1.3.

DIVISION 10, SPECIALTIES

25.18 Specify signage font, size, color and color of background.

25.19 Specify signage to be in compliance with 1114B, 1115B.5 and 1117B.5. See also Checklist 17.

25.20 Specify toilet compartment doors to have automatic-closing device, U-shaped handles below latch at each side of door, and flip-over or sliding latch per 1115B.7.1(4).

25.21 Specify coat hook to be installed at 48” max.

25.22 Specify toilet tissue dispensers to be continuous flow type and recessed.

25.23 Specify grab bar length and diameter.

25.24 Provide cut sheets of all toilet room accessories at back check appointment.

DIVISION 11, EQUIPMENT

25.25 Specify accessible fume hood, eyewash, deluge shower, other specialized equipment, etc.

25.26 Specify clear knee space at specialized equipment and/or accessible reach ranges.

25.27 Provide cut sheets for specialized equipment used at back check appointment.

25.28 Specify food service aisle to be 36” min wide and tray slides to be mounted at 34” max AFF.

© 2003 DSA/OUD

25	Project designer (PD) shall address the following marked or circled items, and any additional plan review comments on drawings and specifications before scheduling a back check appointment for access compliance (AC). Any questions or points of disagreement must be resolved prior to back check by fax to plan reviewer (PR).		Justification, Reference, or Code Citation (C.C.R. Title 24, u.o.n.)	Location of Item on Plans	Comments Notes Examples
	Check List 25. SPECIFICATIONS				
25.29	Specify walk-in coolers and freezers to have accessible entry and exit door hardware, and level maneuvering clearances at the exterior side per 1133B.2.4.2.				
	DIVISION 12, FURNISHINGS				
25.30	Specify U-pulls at cabinets/casework for accessible storage per 1125B.4.				
25.31	Specify access signage at bleachers.				
25.32	Provide code references for accessible seating for persons using wheelchairs and companion.				
25.33	Specify 1% or at least one accessible locker, per 1115B.6.4., including shelf and coat-hook height and signage.				
	DIVISION 14, CONVEYING SYSTEMS				
25.34	Specify lift platform safety sensors to prevent downward travel if obstruction is encountered.				
25.35	Specify back-up battery when lift used for platform is without direct accessible egress.				
25.36	Refer to CBC Part 7, Section 7-3094 for platform lifts.				
25.37	Refer to CBC Part 2, Section 3003 for elevators.				
25.38	Specify all elevator/lift signage to comply with CBC 1117B.5.				
	DIVISION 15, MECHANICAL/PLUMBING				
25.39	Coordinate height of accessible fixtures with those indicated in construction drawings				
25.40	Provide cut sheets for water closet, urinal, lavatories, drinking fountain, showers, etc				
25.41	Specify lever-operated faucets. Push-type and electronically controlled mechanisms are acceptable (controls to be operable with one hand; no tight grasping, pinching or twisting of the wrist).				
25.42	Specify force to activate controls to be no greater than 5 lbs.				
25.43	Specify faucet to remain open for at least 10 seconds when self-closing valves are used.				
25.44	Specify insulation or cover for hot water and drainpipes under accessible sinks and lavs.				

© 2003 DSA/OUD

25	Project designer (PD) shall address the following marked or circled items, and any additional plan review comments on drawings and specifications before scheduling a back check appointment for access compliance (AC). Any questions or points of disagreement must be resolved prior to back check by fax to plan reviewer (PR).		Justification, Reference, or Code Citation (C.C.R. Title 24, u.o.n.)	Location of Item on Plans	Comments Notes Examples

Check List 25. SPECIFICATIONS

25.45 Specify accessible sinks to be 6 1/2" max deep.

DIVISION 16, ELECTRICAL

25.46 Specify permanently installed Assistive Listening System for assembly use areas with fixed seating.

25.47 Specify portable Assistive Listening System for assembly use areas with non-fixed seating.

25.48 Specify type of Assistive Listening System.

25.49 Specify number of receivers and number of signs.

© 2003 DSA/OUD

Notes