California Accessibility Regulations

R E G U L A T I O N S
TABLE OF CONTENTS
ACCESSIBILITY PROVISIONS

PART 1 – CALIFORNIA BUILDING STANDARDS ADMINISTRATIVE CODE

CHAPTER 5. ACCESS TO PUBLIC BUILDINGS BY PHYSICALLY HANDICAPPED PERSONS

Page Numbers

ARTICLE 1. COMPLIANCE PROCEDURES
5-101 PURPOSE 1
5-102 GENERAL.....1
5-103 APPLICATION.....1
5-104 FEES.....2
5-105 PROJECT COST.....3
5-106 REVISION OF PLANS AND SPECIFICATIONS 3
5-107 BILLING FOR FURTHER FEES.....4
5-108 REFUNDS.....4
5-109 REVIEW OF PLANS AND SPECIFICATIONS.....4
5-110 WRITTEN APPROVAL 4
5-111 GENERAL REQUIREMENTS.....5

ARTICLE 2. DIVISION OF THE STATE ARCHITECT – ACCESS COMPLIANCE PROCESSING PRODUCT APPROVALS JANUARY 1, 2001
5-201 PROCESSING INDEPENDENT ENTITY EVALUATION APPROVALS (IEEA) 5
5-202 IEEA APPLICATION PROCEDURE 5
5-203 IEEA ACCEPTANCE PROCEDURE 5
5-204 ACCOUNTING OF IEEA 5
5-205 CONTACTS FOR QUESTIONS 5

ARTICLE 3. ACCEPTANCE OF DETECTABLE WARNING AND DIRECTIONAL SURFACE PRODUCTS FOR MANUFACTURERS AND DESIGN PROFESSIONALS JANUARY 1, 2001
5-301 DSA/AC ACCEPTANCE OF PRODUCT.....6
5-301.1 PRODUCT SUBMITTAL.....6

5-301.2 DSA/AC PRODUCTS EXEMPT FROM EVALUATION BY A RECOGNIZED AGENCY 6
5-301.3 PRODUCTS EVALUATED BY RECOGNIZED STATE AND CITY AGENCIES 6
5-301.4 PRODUCTS EVALUATED BY A RECOGNIZED EVALUATION AGENCY 6
5-301.5 DEVELOPMENT OF DSA ACCEPTANCE CRITERIA 6
5-301.6 MARKING 6

ARTICLE 4. APPLICATION FOR INDEPENDENT ENTITY EVALUATION APPROVAL (IEEA)
5-401 APPLICATION FOR IEEA 7

HISTORY NOTE APPENDIX FOR CHAPTER 5 8

PART 2 – CALIFORNIA BUILDING CODE

CHAPTER 1. ADMINISTRATION

101.1 TITLE 9
101.2 PURPOSE 9
101.3 SCOPE 9
101.4 EFFECTIVE DATE 9
101.5 FORMAT 9
101.6 VALIDITY 9
101.7 STANDARD REFERENCED DOCUMENTS 10
101.8 NONBUILDING REGULATIONS 10
101.9 ORDER OF PRECEDENCE 10
101.16 AVAILABILITY OF CODE 10
101.17 APPLICATION 10

CHAPTER 2. DEFINITIONS AND ABBREVIATIONS
201-227 DEFINITIONS 13-23

CHAPTER 3. USE OR OCCUPANCY
301 OCCUPANCY CLASSIFIED 25
310 REQUIREMENTS FOR GROUP R OCCUPANCIES 25
311 REQUIREMENTS FOR GROUP S OCCUPANCIES 25

CHAPTER 4. SPECIAL USE AND OCCUPANCY
405 STAGES AND PLATFORMS 27

CHAPTER 5. GENERAL BUILDING LIMITATIONS
509 GUARDRAILS 29

CHAPTER 10. MEANS OF EGRESS
1001 ADMINISTRATIVE 31
1003 GENERAL 31
1005 EXIT 35
1008 REVIEWING STANDS, GRANDSTANDS, BLEACHERS, AND FOLDING AND TELESCOPING SEATING 35

CHAPTER 11. ACCESSIBILITY
ACCESSIBILITY 37

CHAPTER 11A. HOUSING ACCESSIBILITY
1101A SCOPE 39
1102A DEFINITIONS 39
1103A BUILDING ACCESSIBILITY 43
1104A GROUP U OCCUPANCIES 43
1105A GROUP R OCCUPANCIES 43
1106A DOOR SIGNAL DEVICES 44
1107A DESIGN AND CONSTRUCTION 44
1108A EGRESS AND AREAS OF REFUGE 46
1109A FACILITY ACCESSIBILITY 46
TABLE 1109A.2-1 ONE COMPLYING BATHROOM 49
TABLE 1109A.2-2 ALL COMPLYING BATHROOMS 50
1110A ELEVATORS AND SPECIAL ACCESS (WHEELCHAIR) LIFTS 51
1111A TELEPHONES 53
1112A KITCHENS 54
1113A SWIMMING POOLS/DRINKING FOUNTAINS 55
1114A SIGNS 55
1115A LAUNDRY ROOMS 56
1116A FLOORING 56
1117A EXTERIOR ROUTES OF TRAVEL 56
1118A PARKING FACILITIES 57
1119A REQUIREMENTS FOR ACCESSIBLE ROUTES IN COVERED BUILDINGS WITHOUT AN ELEVATOR 59
1120A GENERAL ACCESSIBILITY FOR ENTRANCES, EXITS AND PATHS OF TRAVEL 61

CHAPTER 11B. ACCESSIBILITY TO PUBLIC BUILDINGS, PUBLIC ACCOMMODATIONS, COMMERCIAL BUILDINGS AND PUBLICLY FUNDED HOUSING

DIVISION I – NEW BUILDINGS 73
1101B SCOPE 73
1102B DEFINITIONS 73
1103B BUILDING ACCESSIBILITY 76
1104B ACCESSIBILITY FOR GROUP A OCCUPANCIES 76
TABLE 11B-1 – WHEELCHAIR SEATING SPACES 77
1105B ACCESSIBILITY FOR GROUP B OCCUPANCIES 80
1106B ACCESSIBILITY FOR GROUP E OCCUPANCIES 82
1107B FACTORIES AND WAREHOUSES 83
1108B ACCESSIBILITY FOR GROUP H OCCUPANCIES 84
1109B ACCESSIBILITY FOR GROUP I OCCUPANCIES 84
1110B ACCESS FOR GROUP M OCCUPANCIES 85
TABLE 11B-2 – CHECKSTANDS 86
1111B ACCESSIBILITY FOR GROUP R OCCUPANCIES 87
TABLE 11B-3 – ADDITIONAL ACCESSIBILITY REQUIRED IN GUEST ROOMS OR SUITES 89
TABLE 11B-4 – ADDITIONAL ACCESSIBILITY REQUIRED FOR HEARING IMPAIRED IN GUEST ROOMS 90
1112B ACCESSIBILITY FOR GROUP S OCCUPANCIES 90
1113B ACCESSIBILITY FOR GROUP U OCCUPANCIES 90
1114B FACILITY ACCESSIBILITY 90
1115B BATHING AND TOILET FACILITIES 93
TABLE 1115B-1 – SUGGESTED DIMENSIONS FOR CHILDREN'S USE 100
1116B ELEVATORS AND SPECIAL ACCESS (WHEELCHAIR) LIFTS 101
1117B OTHER BUILDING COMPONENTS 105
TABLE 11B-5 – MAXIMUM REACH DEPTH FOR AUTOMATED TELLER MACHINES 113
1118B SPACE ALLOWANCE AND REACH RANGES 113
1119B SPECIAL STANDARDS OF ACCESSIBILITY FOR BUILDINGS WITH HISTORICAL SIGNIFICANCE 114
1120B FLOORS AND LEVELS 114
1121B RESERVED 114
1122B FIXED OR BUILT-IN SEATING, TABLES, AND COUNTERS 114
1123B ACCESS TO EMPLOYEE AREAS 115
1124B GROUND AND FLOOR SURFACES 115
1125B STORAGE 115
1126B VENDING MACHINES 115

DIVISION II – SITE ACCESSIBILITY 116
1127B EXTERIOR ROUTES OF TRAVEL.....116
1128B PEDESTRIAN GRADE SEPARATIONS
(OVERPASSES AND UNDERPASSES) 118
1129B ACCESSIBLE PARKING REQUIRED.....118
TABLE 11B-6 – NUMBER OF ACCESSIBLE PARKING SPACES REQUIRED.....119
1130B PARKING STRUCTURES.....120
1131B PASSENGER DROP-OFF AND LOADING ZONES.....120
1132B OUTDOOR OCCUPANCIES.....121

DIVISION III – ACCESSIBILITY FOR ENTRANCES, EXITS AND PATHS OF TRAVEL 123
1133B GENERAL ACCESSIBILITY FOR ENTRANCES, EXITS
AND PATHS OF TRAVEL 123

DIVISION IV – ACCESSIBILITY FOR EXISTING BUILDINGS.....134
1134B ACCESSIBILITY FOR EXISTING BUILDINGS.....134
1135B HISTORIC PRESERVATION-SPECIAL STANDARDS OF
ACCESSIBILITY FOR BUILDINGS WITH HISTORICAL
SIGNIFICANCE.....136
FIGURES 11B-1A THROUGH 11B-40D..... 137-194

CHAPTER 11C. STANDARDS FOR CARD READERS AT GASOLINE FUEL DISPENSING FACITLITES
1101C CARD-READER DEVICES AT FUEL DISPENSING EQUIPMENT.....195
1102C APPLICATION.....195
1103C NUMBER OF ACCESSIBLE CARD-READING DEVICES REQUIRED 196
1104C REQUIRED FEATURES 196
1105C PROTECTION OF DISPENSERS MOUNTED AT GRADE 196
FIGURES 11C-1 THROUGH 11C-2 197-198

CHAPTER 24. GLASS AND GLAZING.....199

CHAPTER 29. PLUMBING SYSTEMS.....201

CHAPTER 30. ELEVATORS, DUMBWAITERS, ESCALATORS AND MOVING WALKS
3001 SCOPE 203
3003 SPECIAL PROVISIONS.....203

CHAPTER 31B. PUBLIC SWIMMING POOLS
3113B POOL DECKS 207

CHAPTER 34. EXISTING STRUCTURES
DIVISION I 209
3401 GENERAL 209
DIVISION II – STATE HISTORICAL BUILDING CODE 210
CHAPTER 8-1 ADMINISTRATION
8-101 TITLE, PURPOSE AND INTENT 211
8-102 APPLICATION 211
8-103 ORGANIZATION AND ENFORCEMENT 212
8-104 REVIEW AND APPEALS 212
8-105 CONSTRUCTION METHODS AND MATERIALS 213
8-106 SHBSB RULINGS 213
CHAPTER 8-2 DEFINITIONS 213
CHAPTER 8-3 USE AND OCCUPANCY
8-301 PURPOSE AND SCOPE 217
8-302 GENERAL 217
8-303 RESIDENTIAL OCCUPANCIES 217
CHAPTER 8-4 FIRE PROTECTION
8-401 PURPOSE, INTENT AND SCOPE 218
8-402 FIRE-RESISTIVE CONSTRUCTION 219
8-403 INTERIOR FINISH MATERIALS 219
8-404 WOOD LATH AND PLASTER 219
8-405 OCCUPANCY SEPARATION 219
8-406 MAXIMUM FLOOR AREA 219
8-407 VERTICAL SHAFTS 220
8-408 ROOF COVERING 220
8-409 FIRE ALARM SYSTEMS 220
8-410 AUTOMATIC FIRE-EXTINGUISHING SYSTEMS 220
CHAPTER 8-5 MEANS OF EGRESS
8-501 PURPOSE, INTENT AND SCOPE 220
8-502 GENERAL 221
8-503 ESCAPE OR RESCUE WINDOWS AND DOORS 222
CHAPTER 8-6 ALTERNATIVE ACCESSIBILITY PROVISIONS
8-601 PURPOSE, INTENT AND SCOPE 222
8-602 BASIC PROVISIONS 222
8-603 PREFERRED ALTERNATIVES 222
8-604 EQUIVALENT FACILITATION 223
8-605 EXCEPTIONS 224
CHAPTER 8-7 ALTERNATIVE STRUCTURAL REGULATIONS
8-701 PURPOSE, INTENT AND SCOPE 224
8-702 GENERAL 224
8-703 STRUCTURAL SURVEY 225
8-704 NONHISTORICAL ADDITIONS
AND NONHISTORICAL ALTERATIONS 225

8-705 STRUCTURAL REGULATIONS 225
8-706 LATERAL LOAD REGULATIONS 225
CHAPTER 8-8 ARCHAIC MATERIALS AND METHODS OF CONSTRUCTION
8-801 PURPOSE, INTENT AND SCOPE 226
8-802 GENERAL ENGINEERING APPROACH 226
8-803 NONSTRUCTURAL ARCHAIC MATERIALS 227
8-804 ALLOWABLE CONDITIONS FOR SPECIFIC MATERIALS 227
8-805 MASONRY 227
8-806 ADOBE 228
8-807 WOOD 228
8-808 CONCRETE 229
8-809 STEEL AND IRON 229
8-810 HOLLOW CLAY TILE 229
8-811 VENEERS 229
8-812 GLASS AND GLAZING 229
TABLE 8-8A – ALLOWABLE VALUES FOR EXISTING MATERIALS 230
TABLE 8-8B – ALLOWABLE VALUES OF NEW MATERIALS USED IN CONJUNCTION WITH EXISTING CONSTRUCTION 231
CHAPTER 8-9 MECHANICAL, PLUMBING AND ELECTRICAL REQUIREMENTS
8-901 PURPOSE, INTENT AND SCOPE 232
8-902 MECHANICAL 232
8-903 PLUMBING 233
8-904 ELECTRICAL 235
CHAPTER 8-10 HISTORIC DISTRICTS SITES AND OPEN SPACES
8-1001 PURPOSE, SCOPE AND APPLICABILITY 236
8-1002 SITE RELATIONS 236

CHAPTER 35. UNIFORM BUILDING CODE STANDARDS
3504 RECOGNIZED STANDARDS 237
3505 AMENDMENTS TO NATIONAL STANDARDS 240
3506 CALIFORNIA STANDARDS 252

PART 3 – CALIFORNIA ELECTRICAL CODE

STATE ARTICLE 089. ADMINISTRATION 253

CHAPTER 2. WIRING AND PROTECTION
ARTICLE 210 - BRANCH CIRCUITS 257

CHAPTER 3. WIRING METHODS AND MATERIALS
ARTICLE 346 - RIGID METAL CONDUIT 259
ARTICLE 380 - SWITCHES 259

CHAPTER 5. SPECIAL OCCUPANCIES
ARTICLE 540 - MOTION PICTURE PROJECTIONS 261

CHAPTER 7. SPECIAL CONDITIONS
ARTICLE 760 – FIRE ALARM SYSTEMS 263

PART 5 – CALIFORNIA PLUMBING CODE

CHAPTER 1. ADMINISTRATION
101.0 TITLE, SCOPE AND GENERAL 265
101.1 TITLE 265
101.2 PURPOSE 265
101.4 SCOPE 265
101.6 NONBUILDING REGULATIONS 266
101.7 ORDER OF PRECEDENCE 266
101.8 FORMAT 266
101.9 VALIDITY 266
101.10 STANDARD REFERENCE DOCUMENTS 266
101.11 APPLICATION-VESTING AUTHORITY 266
101.11.9 DIVISION OF THE STATE ARCHITECT; ACCESS COMPLIANCE 266

CHAPTER 2. DEFINITIONS 269

CHAPTER 3. GENERAL REGULATIONS 271

CHAPTER 4 PLUMBING FIXTURES AND FIXTURE FITTINGS
412.0 FLOOR DRAINS AND SHOWER STALLS 273
MINIMUM PLUMBING FACILITIES
TABLE 4-1 275
TABLE 4-2 279
TABLE 4-3 281
TABLE 4-4 283

CHAPTER 16 PLUMBING REQUIREMENS FOR ACCOMMODATION OF PERSONS WITH PHYSICAL DISABILITIES
1601.0 GENERAL 285

HISTORY NOTE APPENDIX 287

PART 8 – CALIFORNIA HISTORICAL BUILDING CODE

CHAPTER 8-6. ALTERNATIVE ACCESSIBILITY PROVISIONS 289

PART 9 – CALIFORNIA FIRE CODE

ARTICLE 52. MOTOR VEHICLE FUEL-DISPENSING STATIONS 291

PART 12 – CALIFORNIA REFERENCED STANDARDS CODE

CHAPTERS 12-11A AND 12-11B. BUILDING AND FACILITY ACCESS SPECIFICATIONS
12-11A.201 AND 12-11B.201 DETECTABLE WARNINGS 293
PRODUCT APPROVAL FOR DETECTABLE WARNING PRODUCTS AND DIRECTIONAL SURFACES 293
12-11A.202 AND 12-11B.202 SCOPE 293
12-11A.203 AND 12-11B.203 DETECTABLE WARNING PRODUCTS 293
12-11A.204 AND 12-11B.204 DIRECTIONAL SURFACES 293
12-11A.205 AND 12-11B.205 INDEPENDENT ENTITY 293
12-11A.206 AND 12-11B.206 TWO – YEAR APPROVAL 293
12-11A.207 AND 12-11B.207 FEE 293
12-11A.208 AND 12-11B.208 DISABILITY ACCESS ACCOUNT 293
12-11A.209 AND 12-11B.209 DETECTABLE WARNING PRODUCTS AND DIRECTIONAL SURFACES 293
12-11A.210 AND 12-11B.210 SIGNIFICANT DEGRADATION 294
12-11A.211 AND 12-11B.211 SELECTION OF INDEPENDENT ENTITY 294

CHAPTERS 12-35. CALIFORNIA BUILDING CODE STANDARDS
12-35-101 AMERICAN NATIONAL STANDARDS INSTITUTE (ANSI) 17.1-86) 295
12-35-102 CALIFORNIA CODE OF REGULATIONS (CCR) 295
12-35-103 NATIONAL FIRE PROTECTION ASSOCIATION (NFPA) 72-96 (NATIONAL FIRE ALARM CODE) 295

HISTORY NOTE APPENDIX 297

2001 California Building Standards Administrative Code

California Code of Regulations Title 24, Part 1

See History Notes for Effective Dates

Chapter 5
ACCESS TO PUBLIC BUILDINGS BY PHYSICALLY HANDICAPPED PERSONS

Article 1. Compliance Procedures

5-101. Purpose. These regulations implement Sections 4450 et seq. of the Government Code to ensure that where state funds are utilized for the construction or alteration of any public building or facility or where the funds of counties, municipalities, or other political subdivisions are utilized for the construction or alteration of elementary, secondary or community college buildings and facilities that the plans and specifications for such buildings and facilities are reviewed by the Division of the State Architect, Office of Regulation Services (DSA/ORS) and certified to be in compliance with the "Access to Public Buildings by Physically Handicapped Persons Law" prior to a contract being awarded.

Authority: Government Code Sections 4450, 4453 and 4454.
Reference: Government Code Section 4454.

HISTORY:

1. New Group 2 (§§ 81 through 86) filed 3-5-71 as an emergency; effective on filing. Certificate of Compliance included (Register 71,No. 10). For history of former Group 2 see Register 66, No. 38.

2. Amendment filed 11-24-78; designated effective 1-1-79 (Register 78, No. 47).

5-102. General. For the purpose of assuring compliance with handicapped design requirements, the governmental agency controlling the appropriation from which the project is funded shall submit an application, together with plans and full, complete, and accurate specifications and filing fee, to the State Architect. The DSA/ORS will process the documents. Written approval shall be obtained prior to award of a construction contract.

Authority: Government Code Section 4453.
Reference: Government Code Section 4454.

HISTORY:

1. Amendment filed 11-24-78; designated effective 1-1-79 (Register 78, No. 47).

5-103. Application. For each project to be reviewed and certified, a separate application (Form No. ORS-1) shall be submitted to the DSA/ORS. The application shall be accompanied by a complete set of project plans and specifications and an appropriate filing fee (see Section 5-104).

The above documents shall be submitted to either of the following offices:

DIVISION OF THE STATE ARCHITECT
HEADQUARTERS OFFICE
ACCESS COMPLIANCE PROGRAM
1130 K Street, Suite 101
Sacramento, California 95814

DIVISION OF THE STATE ARCHITECT
BAY AREA OFFICE -- I
1515 Clay Street, Suite 1201
Oakland, California 94612

DIVISION OF THE STATE ARCHITECT
SACRAMENTO OFFICE -- II
1225 R Street
Sacramento, CA 95814

DIVISION OF THE STATE ARCHITECT
LOS ANGELES BASIN OFFICE – III
107 South Broadway, Room 3029*
Los Angeles, California 90073
Attention: Access Compliance Section

DIVISION OF THE STATE ARCHITECT
SAN DIEGO OFFICE -- IV
Reselent Business Park
16680 West Bernardo Drive
San Diego, CA 92127

The application shall be considered received when all the required documents and fees have been received by the office and the application number assigned.

The documents submitted for review and used for certification shall be retained by the DSA/ORS.

Authority: Government Code Section 4454.
Reference: Government Code Section 4454.

HISTORY:

1. Amendment filed 11-24-78; designated effective 1-1-79 (Register 78, No. 47). For prior history, see Register 76, No. 25.

2. Renumbering and amendment of former Section 83 to Section 83.1 filed 8-30-84; effective upon filing pursuant to Government Code Section 11346.2(d) (Register 84, No. 35).

3. Erratum to reflect locations of offices.

5-104. Fees.

(a) The filing fee for projects under applications received on or after September 1, 1984 shall be two-tenths of one percent (0.2%) of the first $500,000.00 of the estimated project cost plus one- tenth of one percent (0.1%) of the project cost greater than $500,000.00 up to and including $2,000,000.00 plus one-hundredth of one percent (0.01%) of the excess of the estimated project cost over $2,000,000.00, except that the minimum fee in any case shall be $200.00.

Example of filing fee to accompany application:

Estimated project cost = $250,000.00		
.002 × $250,000.00	=	$500.00
Estimated project cost = $1,500,000.00		
.002 × $500,000.00	=	$1,000.00
.001 × $1,000,000.00	=	1,000.00
		$2,000.00
Estimated project cost = $5,000,000.00		
.002 × $500,000.00	=	$1,000.00
.001 × $1,500,000.00	=	1,500.00
.0001 × $3,000,000.00	=	300.00
		$2,800.00

(b) The fee schedule in effect at the time of filing shall apply throughout the duration of such application.

(c) If the actual project cost exceeds the estimated cost by more than 5 percent, a further fee for such projects shall become due and shall be equal to the difference between the filing fee paid and the amount computed under the schedule above using

* The address as published is incorrect. Address should read 311 South Spring St., Suite 1301, Los Angeles, CA 90013. This will be submitted for correction in Rulemaking.

the actual cost of the project. The actual project cost shall be determined as directed in Section 5-105 and billed according to Section 5-107.

(d) If the applicant requests the cancellation or withdrawal of the application and return of the plans and specifications and filing fee, this shall be granted unless the review has begun. No portion of the filing fee can be returned after the review has started.

Authority: Government Code Section 4453.
Reference: Government Code Section 4454.

HISTORY:

1. New section filed 8-30-84; effective upon filing pursuant to Government Code Section 11346.2(d) (Register 84, No. 35).

2. (OSA/AC-A 1/89) Editorial transfer from CCR, Title 21 to Title 24 11-1-89.

3. (OSA/AC-A 2/89) Amend CCR, Title 24, Part 1, Sec. 5-104 (a) (b), effective 1-1-90. Approved by Building Standards Commission 10-30-89.

4. (OSA/AC EF 1/92) Emergency order by the Office of the State Architect/Access Compliance to amend Section 5-104 (a), Part 1, Title 24, California Code of Regulations. Filed as an emergency order with the secretary of state February 25, 1992;effectiveMarch 1, 1992.Approved as an emergency by the California Building Standards Commission on February 24, 1992.

5. (OSA/AC EF 1/92) Emergency order by the Office of the State Architect/Access Compliance to amend Section 5-104 (a), Part l, Title 24, California Code of Regulations; approved by the California Building Standards Commission on February 24, 1992; filed as an emergency order with the secretary of state February 25, 1992, and effective March 1, 1992, has lapsed. No action was taken by the OSA/AC to make these regulations permanent; therefore, the initial regulations are back in effect as of June 29, 1992.

5-105. Project Cost. For purposes of determining the fees, both the estimated and actual project cost shall be the cost for the total outlay contemplated for all work included in the certified plans and specifications. The term "project" shall be defined as all buildings and other structures, together with the development of the site, but in the event the plans and specifications submitted with the application do not provide for the construction of, addition or alteration to a building or structure, then it shall be for the site development proposed in the application.

The actual project cost shall include all items, which are normally considered to be contractors operation costs. Addenda or change order items which increase the contract amount shall be included in the final actual project cost computation.

All fees and/or reimbursable charges paid the construction managers shall be included in the actual project cost. When the contract for the work includes items not otherwise subject to the approval of the office and not included in the approved plans and specifications the actual cost shall include this work unless such costs are segregated by separate bid items or by separately priced items of change orders, or by a certified copy of the subcontractor's bid. Such segregation shall not be made by contract price breakdown or estimates.

Authority: Government Code Section 4454.
Reference: Government Code Section 4454.

HISTORY:

1. New section filed 8-30-84; effective upon filing pursuant to Government Code Section 11346.2 (d) (Register 84, No. 35).

5-106. Revision of Plans and Specifications. No additional fee is charged upon submission of revisions to the approved plans and specifications, provided that the entire matter is actually one transaction having to do with the same project and the revisions do not require substantial review for accessibility. If the original plans are abandoned and the plans and specifications submitted in lieu thereof are in fact for a new project rather than an identical project, or where a modified set of plans is for an essentially different concept, it is necessary that a new application be filed and a fee paid. This is regardless of the fact that the project may have the same name, be of the same general size, and be situated at the same location as the project for which the original application was made.

Authority: Government Code Section 4454.
Reference: Government Code Section 4454.

HISTORY:

1. New section filed 8-30-84; effective upon filing pursuant to Government Code Section 11346.2(d) (Register 84, No. 35).

5-107. Billing for Further Fees. For public school projects the DSA/ORS shall determine whether or not further fees are due and shall bill the district for such further fees.

For projects other than public schools, the applicant or owner shall submit to the office a report verifying the actual project cost within 90 days after the completion of the project. This actual project cost shall be the basis for the further fee computation. The accuracy and timely submission of this actual project cost report shall be the responsibility of the owner or his designated agent.

The owner shall be billed for further fees upon completion of the project or portion thereof if fee is due.

Authority: Government Code Section 4454.
Reference: Government Code Section 4454.

HISTORY:
1. New section filed 8-30-84; effective upon filing pursuant to Government Code Section 11346.2 (d) (Register 84, No. 35).

5-108. Refunds. Claims for refunds of five dollars or less due to errors in cost reporting or fee computation shall be made within one year from the date of payment.

Authority: Government Code Section 4454.
Reference: Government Code Section 4454.

HISTORY:
1. New section filed 8-30-84; effective upon filing pursuant to Government Code Section 11346.2(d) (Register 84, No. 35).

5-109. Review of Plans and Specifications. The DSA/ORS will review the submitted documents to ensure that the requirements cited in Article 1 are fully met.

Authority: Government Code Section 4453.
Reference: Government Code Section 4454.

HISTORY:
1. Amendment filed 11-24-78; designated effective 1-1-79 (Register 78, No. 47).

5-110. Written Approval.
(a) Approval Obtained. Upon completion of review, DSA/ORS will return to the awarding authority a written approval, if the documents comply with the requirements. This approval of the application constitutes the "written approval" required by Section 4454 of the Government Code. No changes or revisions shall be made following written approval, which affect handicapped compliance items unless such changes or revisions are submitted to the Access Compliance Section of the DSA/ORS for approval.

(b) Approval Denied. If the documents fail to meet the requirements of these regulations, DSA/ORS will return to the awarding authority the plans with corrections noted thereon together with instructions for resubmittal of the plans and specifications. The corrected plans are the property of the Division of the State Architect and shall be returned within six months or the application will be void. No valid construction contract may be awarded before written approval is obtained.

(c) Unauthorized Deviations. In the event that there is an unauthorized deviation from the requirements of these regulations with respect to the standards specified, the same shall be rectified by full compliance there with within ninety (90) days after discovery of such deviation.

(d) Notification. Where the State Architect is the enforcement authority and any project is proposed to be approved and such approval action would deny accessibility either required by Sections 4450 and 4458, inclusive, of the Government Code to handicapped persons, or by reason of an equivalent facilitation exception granted pursuant to Section 4451 of the Government Code, the State Architect shall notify affected handicapped persons or organizations and others who have made written requests to be informed as to such proposals under consideration.

Authority: Government Code Sections 4450 and 4453.
Reference: Government Code Sections 4451 (as interpreted by the California Superior Court, City and County of San Francisco, in California Association of the Physically Handicapped vs. Trustees of the California State University and Colleges, No. 692231, judgment entered 9-16-80) and 4454.

HISTORY:

1. Amendment filed 11-24-78; designated effective 1-1-79 (Register 78, No. 47).

2. New subsection (d) filed 3-6-81 as an emergency; effective upon filing (Register 81, No. 10). A Certificate of Compliance must be transmitted to OAL within 120 days or emergency language will be repealed on 7-4-81.
3. Order of Repeal of 3-6-81 emergency order filed 3-13-81 by OAL pursuant to Government Code Section 11349.6 (Register 81, No. 11).

4. New subsection (d) filed 7-28-82; effective thirtieth day (Register 82, No. 31).

5. Amendment of subsection (a) filed 7-17-85; effective thirtieth day thereafter (Register 85, No. 29).

5-111. General Requirements. General requirements and building standards are located in Title 24, Part 2.

Article 2. Division of the State Architect – Access Compliance
Processing Product Approvals
January 1, 2001

NOTE: Detectable warning products and directional surfaces installed after January 1, 2001 shall be evaluated by an independent entity, selected by the Department of General Services, Division of the State Architect, Access Compliance, for all occupancies, including transportation and other outdoor environments, except that when products and surfaces are for use in residential housing, evaluation shall be in consultation with the Department of Housing and Community Development. See Government Code Section 4460.

5-201. Processing Independent Entity Evaluation Approvals (IEEA). Independent Entity Evaluation Approvals shall be registered in the Division of the State Architect (DSA) headquarters office.

To maintain a central file for all IEEA and to operate within the current DSA program, certain administration and all accounting shall be performed at the DSA headquarters office under the direction of the Principal of Access Compliance.

5-202. * IEAA Application Procedure.

1. Upon receipt of an IEEA application, send the application fee and a copy of the application to the DSA headquarters office, attention: Access Compliance.

2. A paper file will be created for each IEEA, which will initially include a copy of the application and the application fee. Headquarters personnel will then file the product, manufacturer and registration information, creating an IEEA number.

3. The application fee will be given to the headquarters cashier for deposit.

5-203. IEEA Acceptance Procedure.

1. Prior to issuing IEEA acceptance, it is required that all fees be paid. If fees are due, please contact the manufacturer for payment and forward the payment to the DSA headquarters office, along with the request for the additional payment.

2. The fee, if any, will be given to the headquarters, cashier for filing and deposit.

3. The acceptance letter will be retained at DSA head quarters, Access Compliance. A copy of the status approval letter will be returned to the applicant.

4. Headquarters' personnel will register, prepare and distribute all necessary copies of the acceptance letter. The original file shall be maintained at headquarters.

5-204. Accounting of IEEA. Income for IEEA will be earned in the month in which they are banked. This money will be applied to Disability Access Account for deposit.

5-205. Contacts for Questions.

1. IEEA Contact, SA headquarters, attention: Access Compliance, IEEA Program.

***** The acronym IEAA is incorrect. It should read as IEEA. This will be submitted for correction in Rulemaking.

2. Headquarters Administration Contact, Principal Access Compliance.

3. Headquarters Accounting Contact, DSA headquarters, Accounting.

Authority: Government Code Sections 4450, 4460 and Health& Safety Code Section 18949.1.
Reference: Government Code Section 4460.

Article 3. Acceptance of Detectable Warning and Directional Surface Products for Manufacturers and Design Professionals January 01, 2001

NOTE: Detectable warning products and directional surfaces installed after January 1, 2001 shall be evaluated by an independent entity, selected by the Department of General Services, Division of the State Architect, Access Compliance, for all occupancies, including transportation and other outdoor environments, except that when products and surfaces are for use in residential housing, evaluation shall be in consultation with the Department of Housing and Community Development. See Government Code Section 4460.

5-301. Division of the State Architect, Access Compliance, Acceptance of Product. The procedure for the DSA/AC acceptance of manufactured products is detailed in this article.

All products require prior evaluation by a recognized evaluation agency that has a program specifically intended for such purposes. DSA/AC shall review the evaluation report for compliance with related and appropriate national standards and Title 24 requirements.

5-301.1. Product submittal. Products must meet the requirements of Section 5-301.

5-301.2. Division of the State Architect, Access Compliance, products exempt from evaluation by a recognized agency . No products can be approved for use that do not require evaluation by a recognized evaluation agency.

5-301.3. Products evaluated by recognized state and city agencies. No products can be approved by any state and city agencies for use that do not require evaluation by a recognized evaluation agency.

5-301.4. Products evaluated by a recognized evaluation agency. Products must have, as a minimum, an approved report published by a nationally recognized evaluation agency. Without an evaluation report, the applicant will be required to obtain such a report or will be denied acceptance on DSA/AC projects. The report and its evaluation criteria may be reviewed for compliance with national standards.

5-301.5. Development of DSA Acceptance Criteria. Development of new DSA/AC acceptance criteria shall be based on acceptance criteria from a recognized evaluation agency.

5-301.6. Marking. Each detectable warning and directional surface products shall be provided with:

1. Label indicating the DSA label number,

2. Manufacturer' s product number, and

3. Product approval expiration date.

Authority: Government Code Sections 4450 and 4460 and Health & Safety Code Section 18949.1.
Reference: Government Code Section 4460.

Article 4. Application for Independent Entity Evaluation Approval (IEEA)

5-401. Application for IEEA. The following form must be filed in duplicate**:**

APPLICATION FOR IEEA FORM
(Filed in Duplicate)

1. Product Name: _____

2. Description of Product: _____ Expiration Date: _____

3. Intended Product Use: _____

4. Company Name: _____

5. Company Address: _____

6. Contact Person: _____

Title: _____

Contact Person's Phone Number: _____

Contact Person's Fax Number: _____

7. Name of Applicant: _____

8. Signature of Applicant: _____ Date: _____

9. Application Fee Submitted: _____

Please make checks payable to Division of the State Architect, Access Compliance

New Submittal:	$1,500.00
Revised Submittal:	$ 500.00

Fees shown are for initial application. Additional time expended during product review in excess of the initial fee will be billed on an hourly basis.

10. Return application, check and submittal to:

Division of the State Architect – Access Compliance
1130 K Street, Suite 101
Sacramento, CA 95814

HISTORY NOTE APPENDIX FOR CHAPTER 5

Administrative Regulations for the Division of the State Architect, Access Compliance
(Title 24, Part 1, California Code of Regulations)

The format of the history notes has been changed to be consistent with the other parts of the California Building Standards Code. The history notes for prior changes remain within the text of this code.

1. (DSA/AC 2/01) Adoption of detectable warning products and standards, Chapter 5, Articles 2, 3 and 4. Approved by the California Building Standards Commission on November 28, 2001. Filed with the Secretary of State on March 1, 2002, effective April 2, 2002.

2001
California
Building
Code

California Code of Regulations
Title 24, Part 2

Based on 1997 Uniform Building Code

Effective
November 1, 2002

Chapter 1
ADMINISTRATION*

SECTION 101 – TITLE, PURPOSE AND SCOPE

101.1 Title. *For the State of California, these regulations shall be known as the California Building Code. The provisions contained in the California Building Code of the (compiled) California Building Standards Code as defined in Section 18910, Health and Safety Code, may be cited as such and are referred to hereafter as "these Regulations" or "these building standards" or "this code."*

101.2 Purpose. ***[For DSA/AC]*** *The purpose of this code is to ensure that barrier-free design is incorporated in all buildings, facilities, site work and other developments to which this code applies and to ensure that they are accessible to and usable by persons with disabilities.*

101.3 Scope.

101.3.1 *The provisions of the model codes which are adopted by these regulations are applicable to all occupancy groups and uses regulated by this code. The amendments to the model codes are applicable only to those occupancies or uses which the state agency adopting the amendments is authorized to regulate as listed in Section 101.17.*

> ***NOTE:*** *It is not the intent of this section that every existing occupancy within the scope of the state fire marshal's jurisdiction mandatorily conform or be made to conform to the new construction requirements relative to fire, panic and explosion safety. Reasonable judgment must be exercised by the enforcing agency in the application of these building standards to existing occupancies.*

> ***[For DSA/AC] EXCEPTION:*** *Outdoor environments and uses shall be classified according to accessibility uses described in Chapters 11A, 11B and 11C, and life safety concerns.*

101.4 Effective Date.

101.4.1 *One hundred and eighty days after the date of publication, or as otherwise noted herein.*

> ***NOTE:*** *For clarification purposes, the applicable sections of the Health and Safety Codes are repeated here for clarity and read as follows:*

Section 18938. Application and Effective Date. *The building standards contained in the Uniform Fire Code, of the International Conference of Building Officials and the Western Fire Chiefs Association, Inc., the Uniform Building Code of the International Conference of Building Officials, Appendix Chapter 1 of the Uniform Code for Building Conservation of the International Conference of Building Officials, the Uniform Plumbing Code of the International Association of Plumbing and Mechanical Officials, the National Electrical Code of the National Fire Protection Association, the Uniform Mechanical Code of the International Association of Plumbing and Mechanical Officials, as referenced in the California Building Standards Code, shall apply to all occupancies throughout the state and shall become effective 180 days after publication in the California Buildings Standards Code by the California Building Standards Commission, or at a later date after publication established by the commission.*

101.5 Format. *This part fundamentally adopts the UBC by reference on a chapter-by-chapter basis. Such adoption is reflected in the adoption table of each chapter of this part. When the adoption table of a chapter of this part makes no reference to a specific chapter of the UBC, such chapter of the UBC is not adopted as a portion of this code.*

101.6 Validity. *If any chapter section, subsection, sentence, clause or phrase of this code is for any reason held to be unconstitutional, contrary to statute, exceeding the authority of the state as stipulated by statutes, or otherwise inoperative, such decision shall not affect the validity of the remaining portion of this code.*

***** For DSA/AC to carry out its statutory responsibilities, DSA/AC historically adopts only those sections indicated as CA amendments. This limited scope will be submitted for correction in Rulemaking.

101.7 Standard Reference Documents. *The codes, standards and publications adopted and set forth in this code, including other codes, standards and publications referred to therein are, by title and date of publication, hereby adopted as standard reference documents of this code.*

When this code does not specifically cover any subject relating to building design and construction, recognized fire-prevention engineering practices shall be employed. The National Fire Codes and the Fire Protection Handbook of the National Fire Protection Association may be used as authoritative guides in determining recognized fire-prevention engineering practices.

101.8 Nonbuilding Regulations. *Requirements contained in the UBC, or in any other referenced standard, code or document, which are not building standards as defined in Section 18909, Health and Safety Code, shall not be construed as part of the provisions of this code.*

For the applicability of regulations relating to maintenance, operation, use, limitations or prohibitions, and similar nonbuilding regulations, see other titles of the California Code of Regulations.

101.9 Order of Precedence.

101.9.1 General. *In the event of any differences between these building standards and the standard reference documents, the text of these building standards shall govern. Where a specific provision varies from a general provision, the specific provision shall apply.*

101.9.2 Fire Codes. *Nothing in these building standards shall diminish the requirements of the state fire marshal.*

101.16 Availability of Code. *For clarification purposes, the applicable section of the Health and Safety Code is repeated here for clarity and reads as follows:*

Section 18942. *(d) (1) Each city, county, and city and county, including charter cities, shall obtain and maintain with all revisions on a current basis, at least one copy of the building standards and other state regulations relating to buildings published in Title 8, 19, 20, 24 and 25 of the California Code of Regulations. These codes shall be maintained in the office of the building official responsible for the administration and enforcement of this part.*

(2) This subdivision shall not apply to any city or county which contracts for the administration and enforcement of the provisions of this part with another local government agency that complies with this section.

101.17 Application.

Vesting Authority. *When adopted by a state agency, the provisions of this code shall be enforced by the appropriate enforcing agency, but only to the extent of authority granted to such agency by the State Legislature.*

Following is a list of the state agencies that adopt building standards, the specific scope of application of the agency responsible for enforcement, and the specific statutory authority of each agency to adopt and enforce such provisions of building standards of this code, unless otherwise stated.

101.17.11 DSA/AC. Access Compliance, Division of the State Architect.

General. *To assure that barrier-free design is incorporated in all buildings, facilities, site work and other improvements to which this code applies in compliance with state law to assure that these improvements are accessible to and usable by persons with disabilities. Additions, alterations and structural repairs in all buildings and facilities shall comply with these provisions for new buildings, except as otherwise provided and specified herein.*

The provisions of these regulations shall apply to any portable buildings leased or owned by a school district, and shall also apply to temporary and emergency buildings and facilities.

In addition, to incorporate standards at least as restrictive as those required by the federal government for barrier-free design under (1) Title III (Public Accommodations and Commercial Facilities), Subpart D (New Construction and Alteration) and Appendix A (Americans with Disabilities Act Accessibility Guidelines) (see 28 C.F.R., Part 36), and (2) Title II (Public Entities), Section 35.151 (New Construction and Alterations) (see 28 C.F.R., Part 35) both from the Americans with

Disabilities Act of 1990, and (3) under the Fair Housing Amendments of 1988. Some of these regulations may be more stringent than state law in order to meet the federal requirement.

***1. Application**. Publicly funded buildings, structures, sidewalks, curbs and related facilities shall be accessible to and usable by persons with disabilities as follows:*

***NOTE:** See Government Code commencing with Section 4450.*

***1.1** All buildings, structures, sidewalks, curbs and related facilities constructed in the state by the use of state, county or municipal funds, or the funds of any political subdivision of the state.*

***1.2** All buildings, structures and facilities that are leased, rented, contracted, sublet or hired by any municipal county, or state division of government, or by a special district.*

***1.3** All publicly funded buildings used for congregate residences or for one- or two-family dwelling unit purposes shall conform to the provisions applicable to living accommodations.*

***1.4** All existing publicly funded buildings and facilities when alterations, structural repairs or additions are made to such buildings or facilities. For detailed requirements on existing buildings, see Chapter 11B, Division IV.*

***1.5** With respect to buildings, structures, sidewalks, curbs and related facilities not requiring a building permit, building standards published in the California Building Standards Code relating to access for persons with disabilities and other regulations adopted pursuant to Government Code Section 4450, and in effect at the time construction is commenced, shall be applicable.*

***2. Application.** All privately funded public accommodations, as defined, and commercial facilities, as defined, shall be accessible to persons with physical disabilities as follows:*

***NOTE:** See Health and Safety Code commencing with Section 19952.*

***EXCEPTION:** Certain types of privately funded multistory buildings do not require installation of an elevator to provide access above and below the first floor. See Chapter 11B.*

***NOTE:** Exceptions for multistoried buildings formerly located in this section have been moved to Chapter 11B.*

***2.1** Any building, structure, facility, complex, or improved area, or portions thereof, which are used by the general public.*

***2.2** Any sanitary facilities which are made available for the public, clients or employees in such accommodations or facilities.*

***2.3** Any curb or sidewalk intended for public use that is constructed in this state with private funds.*

***2.4** All existing privately funded public accommodations when alterations, structural repairs or additions are made to such public accommodations as set forth under Chapter 11B.*

3. Application. Public Housing and Private Housing Available for Public Use.

***NOTE:** See Government Code Sections 4450 and 12955.1 (d).*

4. Enforcing Agency.

***4.1** The director of General Services where state funds are utilized for any project or where funds of counties, municipalities or other political subdivisions are utilized for the construction of elementary, secondary or community college projects.*

***4.2** The governing bodies where funds of counties, municipalities or other political subdivisions are utilized except as otherwise provided above.*

***4.3** The building department of every city, county, or city and county within the territorial area of its city, county, or city and county, where private funds are utilized. "Building department" means the department, bureau or*

officer charged with the enforcement of laws or ordinances regulating the erection or construction, or both the erection and construction, of buildings.

5. Special Conditions for Persons with Disabilities Requiring Appeals Action Ratification. *Whenever reference is made in these regulations to this section, the findings and determinations required to be rendered by the local enforcing agency shall be subject to ratification through an appeals process.*

6. Authority Cited *Government Code Section 4450.*

7. Reference *Government Code Sections 4450 through 4460, 12955.1(d) and Health and Safety Code Sections 18949.1, 19952 through 19959.*

Chapter 2
DEFINITIONS AND ABBREVIATIONS

SECTION 201 – DEFINITIONS

SECTION 202 – A

ACCESSIBLE. [For HCD 1/AC] *See Chapter 11A, Section 1102A.1-A.*
[For DSA/AC] *See Chapter 11A, Section 1102A.1-A and Chapter 11B, Section 1102B.*

ACCESSIBILITY. [For HCD 1/AC] *See Chapter 11A, Section 1102A.1-A.*
[For DSA/AC] *See Chapter 11A, Section 1102A.1-A and Chapter 11B, Section 1102B.*

[For DSA/AC] ACCESSIBLE ELEMENT *is an element specified by the regulations adopted by the Division of the State Architect/Access Compliance.*

[For DSA/AC] ACCESSIBLE LOCATION *is a location, which can be reached by an employee standing on the floor, platform, runway or other permanent working area.*

ACCESSIBLE ROUTE OF TRAVEL. [For HCD 1/AC] *See Chapter 11A, Section 1102A.1-A.* ***[For DSA/AC]*** *See Chapter 11A, Section 1102A.1-A and Chapter 11B, Section 1102B.*

[For DSA/AC] ACCESSIBLE SPACE *is a space that complies with the regulations adopted by the Division of the State Architect/Access Compliance.*

[For DSA/AC & HCD 1/AC] ADAPTABLE DWELLING UNIT. *See Chapter 11A, Section 1102A.1-A.*

ADDITION is an extension or increase in floor area or height of a building or structure.

[For DSA/AC] AISLE *is a circulation path between objects such as seats, tables, merchandise, equipment, displays, shelves, desks, etc.*

[For DSA/AC] AISLE, EMPLOYEE AREAS, *(as required for architectural accessibility) is a space that serves as a passage-way, which is created by architectural components such as walls, fixed cabinetry or fixtures and not moveable components such as furniture.*

ALLEY is any public way or thoroughfare less than 16 feet (4877 mm) but not less than 10 feet (3048 mm) in width that has been dedicated or deeded to the public for public use.

[For DSA/AC] **ALTER** or **ALTERATION** is any change, addition or modification in construction or occupancy *or structural repair or change in primary function to an existing structure other than repair or addition.*

ANSI is the American National Standards Institute, 1430 Broadway, New York, New York 10018.

APARTMENT HOUSE is any building or portion thereof that contains three or more dwelling units and, for the purpose of this code, includes residential condominiums.

APPROVED. [*For HCD 1 & HCD 2, DSA/AC]* *Approved means meeting the approval of the enforcement agency, except as otherwise provided by law, when used in connection with any system, material, type of construction, fixture or appliance as the result of investigations and tests conducted by the agency, or by reason of accepted principles or tests by national authorities, technical, health, or scientific organizations or agencies.*

NOTES:
1. *See Health and Safety Code Section 17920 for" approved" as applied to residential construction and buildings or structures accessory thereto, as referenced in Section 101.17.9.*

2. *See Health and Safety Code Section 17921.1 for "approved" as applied to the use of hotplates in residential construction referenced in Section 101.17.9.*

3. *See Health and Safety Code Section 17921.3 for "approved" as applied to low-flush water closets in residential construction, as referenced in Section 101.17.9.*

4. *See Health and Safety Code Section 19966 for "approved" as applied to factory-built housing as referenced in Section 101.17.9.*

[For DSA/AC, HCD 1 & HCD 2] APPROVED TESTING AGENCY *is any agency, which is determined by enforcement agency, except as otherwise provided by statute, to have adequate personnel and expertise to carry out the testing of systems, materials, type of construction fixtures or appliances.*

ASSEMBLY BUILDING is a building or portion of a building used for the gathering together of 50 or more persons for such purposes as deliberation, education, instruction, worship, entertainment, amusement, drinking or dining, or awaiting transportation.

[For DSA/AC, SFM] *Any building or structure or portion thereof used or intended to be used for the showing of motion pictures when an admission fee is charged and when such building or structure is open to the public and has a capacity of 10 or more persons.*

[For DSA/AC & HCD 1/AC] ASSISTIVE DEVICE. *See Chapter 11A, Section 1102A.1-A.*

AUTOMATIC DOOR. [For HCD 1/AC] *See Chapter 11A, Section 1102A.1-A.* ***[For DSA/AC]*** *See Chapter 11A, Section 1102A.1-A and Chapter 11B, Section 1102B.*

SECTION 203 – B

[For DSA/AC, HCD 1/AC] BATHROOM. *See Chapter 11A, Section 1102A.2-B.*

[For DSA/AC, HCD 1 & HCD 2, SFM] **BUILDING** is any structure *as to which state agencies have regulatory power,* used or intended for supporting or sheltering any use or occupancy, *housing or enclosure of persons, animals, chattels, equipment or property of any kind, and also includes structures wherein things may be grown, made, produced, kept, handled, stored or disposed of, and all appendages, accessories, apparatus, appliances and equipment installed as a part thereof.*

"Building" shall not include machinery, equipment or appliances installed for manufacture or process purposes only, nor shall it include any construction installations which are not a part of a building, any tunnel, mine shaft, highway or bridge, or include any house trailer or vehicle which conforms to the Vehicle Code.

NOTE: *BUILDING shall have the same meaning as defined in Health and Safety Code Section 17920 and 18908 for the applications specified in Sections 101.17.9 and 101.17.10.*

[For HCD 1/AC, DSA/AC] BUILDING ENTRANCE ON AN ACCESSIBLE ROUTE. *See Chapter 11A, Section 1102A.2-B.*

[For HCD 1 & HCD 2, DSA/AC] **BUILDING, EXISTING,** is a building erected prior to the adoption of this code, or one for which a legal building permit has been issued.

[For DSA/AC, HCD 1 & HCD 2] **BUILDING OFFICIAL** is the officer or other designated authority charged with the administration and enforcement of this code, or the building officials duly authorized representative *[for SFM] in accordance with state law, Health and Safety Code Section 13146, in occupancies regulated by the State Fire Marshal.*

SECTION 204 – C

[For HCD 1 & HCD 2, DSA/AC, SFM, DSA/SS] C.C.R. *means the California Code of Regulations.*

[For DSA/AC] CIRCULATION PATH *is an exterior or interior way of passage from one place to another for pedestrians, including, but not limited to, walks, hallways, courtyards, stairways and stair landings.*

[For DSA/AC] CLOSED-CIRCUIT TELEPHONE *is a telephone with dedicated line(s) such as a house phone, courtesy phone or phone that must be used to gain entrance to a facility.*

[For HCD 2, DSA/AC] COMMERCE *is travel, trade, traffic, commerce, transportation, or communication (1) within the state; (2) among several states; (3) between any foreign country or any territory or possession and any state; or (4) between points in the same state, but through another state or foreign country.*

[For HCD 2, DSA/AC] COMMERCIAL FACILITIES *are facilities that are intended for nonresidential use and whose operations will affect commerce, including factories, warehouses, office buildings, and other buildings in which employment may occur. Commercial facilities shall not include railroad locomotives, railroad freight cars, railroad cabooses, railroad cars covered under Title III of the Americans with Disabilities Act of 1990, or facilities that are covered or expressly exempted from coverage under the Fair Housing Amendment Act of 1988 (42 USC 3601-3631, et seq.).*

COMMON USE AREAS. [For HCD 1/AC] *See Chapter 11A, Section 1102A.3-C.* ***[For DSA/AC]*** *See Chapter 11A, Section 1102A.3-C and Chapter 11B, Section 1102B.*

CONDOMINIUM, RESIDENTIAL. See apartment house.

CONGREGATE RESIDENCE is any building or portion thereof that contains facilities for living, sleeping and sanitation, as required by this code, and may include facilities for eating and cooking, for occupancy by other than a family. A congregate residence may be a shelter, convent, monastery, dormitory, fraternity or sorority house, but does not include jails, hospitals, nursing homes, hotels or lodging houses.

[For DSA/AC & HCD 1/AC] COVERED MULTIFAMILY DWELLINGS. *See Chapter 11A, Section 1102A.3-C.*

[For DSA/AC & HCD 1/AC] CROSS SLOPE. *See Chapter 11A, Section 1102A.3-C and Chapter 11B, Section 1102B.*

[For HCD 1/AC, DSA/AC] CURB CUT. *See Chapter 11A, Section 1102A.3-C and Chapter 11B, Section 1102B.*

CURB RAMP. [For HCD 1/AC] *See Chapter 11A, Section 1102A.3-C.* ***[For DSA/AC]*** *See Chapter 11A, Section 1102A.3-C and Chapter 11B, Section 1102B.*

SECTION 205 – D

DETECTABLE WARNING. [For HCD 1/AC] *See Chapter 11A, Section 1102A.4-D.* ***[For DSA/AC]*** *See Chapter 11A, Section 1102A.4-D and Chapter 11B, Section 1102B.*

[For HCD1 & HCD2, DSA/AC] DIRECTIONAL SIGN *is a publicly displayed notice which indicates by use of words or symbols a recommended direction or route of travel.*

[For DSA/AC] DISABILITY *is (1) a physical or mental impairment that substantially limits one or more of the major life activities of an individual, or (2) a record of such an impairment, or (3) being regarded as having such an impairment.*

[For DSA/AC] DISABLED. *See "disability."*

[For DSA/AC] DORMITORY *is a room occupied by more than two guests.*

DWELLING UNIT is any building or portion thereof that contains living facilities, including provisions for sleeping, eating, cooking and sanitation, as required by this code, for not more than one family, or a congregate residence for 10 or less persons. ***[For HCD 1/AC]*** *See Chapter 11A, Section 1102A.4-D.* ***[For DSA/AC]*** *See Chapter 11A, Section 1102A.4-D and Chapter 11B, Section 1102B.*

SECTION 206 – E

[For DSA/AC] ELEVATOR, PASSENGER. *See Chapter 11B, Section 1102B.*

[For HCD 1 & HCD 2, DSA/AC, OSHPD 1, 2, 3 & 4] ENFORCING AGENCY *is the designated department or agency as specified by statute or regulation.*

[For DSA/AC] ENTRANCE *shall mean any entrance to a facility, which has a substantial flow of pedestrian traffic to any specific major function of the facility.*

EQUIVALENT FACILITATION. [For HCD 1/AC] *See Chapter 11A, Section 1102A.5-E.* ***[For DSA/AC]*** *See Chapter 11A, Section 1102A.5-E and Chapter 11B, Section 1102B.*

EXISTING BUILDINGS. See "building, existing."

EXIT. See Section 1005.1.

SECTION 207 – F

FACILITY (or FACILITIES). [For HCD 1/AC] *See Chapter 11A, Section 1102A.6-F.* ***[For DSA/AC]*** *See Chapter 11A, Section 1102A.6-F and Chapter 11B, Section 1102B.*

SECTION 208 – G

GRAB BAR *is a bar for the purpose of being grasped by the hand for support.* ***[For HCD 1 & HCD 2]*** *See Chapter 11A, Section 1102A.7-G.* ***[For DSA/AC]*** *See Chapter 11A, Section 1102A.7-G and Chapter 11B, Section 1102B.*

[For HCD 1 & HCD 2, DSA/AC] **GRADE (Adjacent Ground Elevation)** is the lowest point of elevation of the finished surface of the ground, paving or sidewalk within the area between the building and the property line or, when the property line is more than 5 feet (1524 mm) from the building, between the building and a line 5 feet (1524mm) from the building. *See Health and Safety Code Section 19955.3 (d).*

[For DSA/AC, HCD 1/AC] GROUND FLOOR. *See Chapter 11A, Section 1102A.7-G.*

[For HCD 1 & HCD 2, DSA/AC] GUARDRAIL *is a vertical barrier erected along the open edges of a floor opening, wall opening, ramp, platform, runway or other elevated area to prevent persons from falling off the open edge.*

SECTION 209 – H

HANDRAIL is a railing provided for grasping with the hand for support. See also "guardrail". ***[For HCD 1/AC]*** *See Chapter 11A, Section 1102A.8-H.* ***[For DSA/AC]*** *See Chapter 11A, Section 1102A.8-H and Chapter 11B, Section 1102B.*

[For DSA/AC] HEALTH CARE PROVIDER *is a person or entity regulated by a state to provide professional services related to the physical or mental health of an individual and who makes such services available to the public.*

[For DSA/AC] HISTORICAL BUILDING. *See "qualified historical building or property, Chapter 34, Division II, Section 8-218-Q."*
[For HCD 1, HCD 2, DSA/AC] **HOTEL *OR MOTEL*** is any building containing six or more guest rooms intended or

[For HCD 1, HCD 2, DSA/AC] **HOTEL *OR MOTEL*** is any building containing six or more guest rooms intended or designed to be used, or *which* are used, rented or hired out to be occupied, or *which* are occupied for sleeping purposes by guests.

SECTION 210 – I

****INDEPENDENT ENTITY*** *is a not-for-profit product safety testing and certification organization, dedicated to testing for public safety. An independent entity would operate for the testing, certification and quality assessment of products, systems and services.*

INTERNATIONAL SYMBOL OF ACCESSIBILITY. [For HCD 1/AC] *See Chapter 11A, Section 1102A.9-I.* ***[For DSA/AC]*** *See Chapter 11A, Section 1102A.9-I and Chapter 11B, Section 1102B.*

SECTION 211 – J

No definitions.

SECTION 212 – K

KICK PLATE. [For HCD 1/AC] *See Chapter 11A, Section 1102A.11-K.* ***[For DSA/AC]*** *See Chapter 11A, Section 1102A.11-K and Chapter 11B, Section 1102B.*

SECTION 213 – L

LEVEL AREA. [For HCD 1/AC] *See Chapter 11A, Section 1102A.12-L.* ***[For DSA/AC]*** *See Chapter 11A, Section 1102A.12-L and Chapter 11B, Section 1102B.*

LIFT, SPECIAL ACCESS. [For HCD 1/AC] *See Chapter 11A, Section 1102A.12-L.* ***[For DSA/AC]*** *See Chapter 11A, Section 1102A.12-L and Chapter 11B, Section 1102B.*

[For HCD 1, DSA/AC] LIVING ACCOMMODATIONS *means any building or portion thereof having three or more apartments as defined in this code or any publicly funded building or portion thereof.*

SECTION 214 – M

MARKED CROSSING. [For HCD 1/AC] *See Chapter 11A, Section 1102A.13-M.* ***[For DSA/AC]*** *See Chapter 11A, Section 1102A.13-M and Chapter 11B, Section 1102B.*

[For HCD 1, DSA/AC] **MOTEL** shall mean *the same as* hotel as defined in this code.

[For HCD 1/AC, DSA/AC] MULTISTORY DWELLING UNIT. *See Chapter 11A, Section 1102A.13-M.*

[For HCD 1 & HCD 2, DSA/AC] MULTIPLE-ACCOMMODATION TOILET FACILITY *is a room that has more than one sanitary fixture, is intended for the use of more than one person at a time, and which usually is provided with privacy compartments or screens shielding some fixtures from view. A bathroom serving a hotel guest room and a privacy toilet in small offices, stores and similar locations are not included in this category.*

***** The DSA/AC adoption indicator for the definition of Independent Entity was erroneously left out of the publication of the 2001 edition of the California Building Code. This will be submitted for correction in Rulemaking by adding DSA/AC adoption indicator.

SECTION 215 – N

[For HCD 1/AC] NEWLY CONSTRUCTED. *See Chapter 11A, Section 1102A.14-N.* ***[For DSA/AC]*** *See Chapter 11A, Section 1102A.14-N and Chapter 11B, Section 1102B.*

NOSE, NOSING. [For HCD 1/AC] *See Chapter 11A, Section 1102A.14-N.* ***[For DSA/AC]*** *See Chapter 11A, Section 1102A.14-N and Chapter 11B, Section 1102B.*

SECTION 216 – O

[For HCD 2, DSA/AC] OCCUPIABLE *is a room or enclosed space designed for human occupancy in which individuals congregate for amusement, educational or similar purposes, or in which occupants are engaged at labor, and which is equipped with means of egress, light and ventilation.*

OPEN RISER. [For HCD 1/AC] *See Chapter 11A, Section 1102A.15-O.* ***[For DSA/AC]*** *See Chapter 11A, Section 1102A.15-O and Chapter 11B, Section 1102B.*

[For DSA/AC] OPERABLE PART *is a part of a piece of equipment or appliance used to insert or withdraw objects, or to activate, deactivate or adjust the equipment or appliance (for example, coin slot, pushbutton, handle).*

SECTION 217 – P

PASSAGE DOOR. [For DSA/AC] *See Chapter 11A, Section 1102A.16-P and Chapter 11B, Section 1102B.*

[For HCD 1 & HCD 2] PASSENGER ELEVATOR *is an elevator used primarily to carry persons. See definition of "elevator," in CCR, Title 24, Part 7, Article 7-6, Section 3009.* ***[For DSA/AC]*** *See Elevator, Passenger in Chapter 11B, Section 1102B.*

[For DSA/AC] PATH OF TRAVEL *is a passage that may consist of walks and sidewalks, curb ramps and pedestrian ramps, lobbies and corridors, elevators, other improved areas, or a necessary combination thereof, that provides free and unobstructed access to and egress from a particular area or location for pedestrians and/or wheelchair users.*

PEDESTRIAN. [For HCD 1/AC] *See Chapter 11A, Section 1102A.16-P.* ***[For DSA/AC]*** *See Chapter 11A, Section 1102A.16-P and Chapter 11B, Section 1102B.*

[For DSA/AC] PEDESTRIAN GRADE SEPARATION *is a structure erected over or under an obstacle such as a freeway, roadway, street, railroad, stream, etc., and intended primarily for pedestrian use.*

PEDESTRIAN RAMP. [For HCD 1/AC] *See Chapter 11A, Section 1102A.16-P.* ***[For DSA/AC]*** *See Chapter 11A, Section 1102A.16-P and Chapter 11B, Section 1102B.*

PEDESTRIAN WALKWAY is a walkway used exclusively as a pedestrian trafficway.

PEDESTRIAN WAY. [For HCD 1/AC] *See Chapter 11A, Section 1102A.16-P.* ***[For DSA/AC]*** *See Chapter 11A, Section 1102A.16-P and Chapter 11B, Section 1102B.*

[For DSA/AC] PERMANENT *shall mean facilities, which, are intended to be used for periods longer than those designated in this code under the definition of" temporary."*

PERMIT is an official document or certificate issued by the building official authorizing performance of a specified activity.

[For HCD 1/AC, DSA/AC] PERSON WITH DISABILITY. *See Chapter 11A, Section 1102A.16-P.*

[For HCD 1/AC, DSA/AC] PERSONS WITH PHYSICAL DISABILITIES. *See Chapter 11A, Section 1102A.16-P.*

[For DSA/AC] PLATFORM, UNENCLOSED, *is a horizontal, generally level and raised surface for speakers, performances, displays, etc., as distinguished from platform, which are enclosed.*

[For HCD 1/AC, DSA/AC] POWDER ROOM. *See Chapter 11A, Section 1102A.16-P.*

[For HCD 1 & HCD 2, DSA/AC] POWER-ASSISTED DOOR *is a door used for human passage with a mechanism that helps to open the door, or relieves the opening resistance of a door, upon the activation of a switch or a continued force applied to the door itself.*

[For HCD 1 & HCD 2, DSA/AC] PUBLIC ACCOMMODATION *includes, but is not limited to, any building or facility or other specific public use facilities not listed in Items 1 through 12 if they fall into one or more of the following categories:*

1. *Places of public lodging.*
2. *Establishments serving food or drink open to public use.*
3. *Places of exhibition or entertainment open to public use.*
4. *Places of public gathering.*
5. *Sales or rental establishments open to public use.*
6. *Service establishments open to public use.*
7. *Stations used for public transportation.*
8. *Places of public display or collection.*
9. *Places of public recreation.*
10. *Places of public education.*
11. *Social service center establishments open to public use.*
12. *Places of exercise or recreation open to public use.*

Examples of public accommodations for purposes of this code shall include, but not be limited to, the following private entities:

1. An inn, hotel, motel or other place of public lodging, except for a lodging house located within a building that contains not more than five rooms for rent or hire.

2. A restaurant, bar, or other establishment serving food or drink.

3. A motion picture house, theater, concert hall, stadium or other place of exhibition or entertainment.

4. An auditorium, convention center, lecture hall, or other place of public gathering.

5. A bakery, grocery store, clothing store, hardware store, shopping center, or other sales or retail establishment.

6. A laundromat, dry cleaner, bank, barber shop, beauty shop, travel service, shoe repair service, funeral parlor, gas station, office of an accountant or lawyer, pharmacy, insurance office, professional office of a health care provider, hospital or other service establishment.

7. A terminal, depot, or other station used for specified public transportation.

8. A museum, library, gallery, or other place of public display or collection.

10. A nursery, elementary, secondary, undergraduate, or postgraduate private school, or other place of education.

11. A day-care center, senior citizen center, homeless shelter, food bank, adoption agency or other social service center establishment.

12. A gymnasium, health spa, bowling alley, golf course, or other place of exercise.

13. A church.

14. An office building.

15. A public curb or sidewalk.

***EXCEPTION:** See Chapter 11A, Section 1102A.16-P.*

***[For HCD 1 & HCD 2 & DSA/AC] PUBLICLY FUNDED.** For the purpose of housing, all buildings, structures, sidewalks, curbs and related facilities constructed in the state and used or intended to be used as a public use area, as defined in Section 1102A.16-P, shall comply with the accessibility standards of Chapter 11B of this code when state, county or municipal funds, or funds of any political subdivision of the state are used.*

***PUBLIC USE AREA. [For HCD 1/AC]** See Chapter 11A, Section 1102A.16-P. **[For DSA/AC]** See Chapter 11A, Section 1102A.16-P and Chapter 11B, Section 1102B.*

SECTION 218 – Q

***[For DSA/AC] QUALIFIED HISTORICAL BUILDING (OR STRUCTURE).** See Chapter 34, Division II, Section 8-218-Q.*

SECTION 219 – R

***[For DSA/AC] RAIL TRANSIT BOARDING PLATFORM** is a horizontal, generally level surface, whether raised above, recessed below, or level with a transit rail, from which persons embark/disembark a fixed rail vehicle.*

***[For HCD 1/AC, DSA/AC] RAMP.** See Chapter 11A, Section 1102A.18-R.*

***[For HCD 2, DSA/AC] REASONABLE PORTION** shall mean that segment of a building, facility, area, space or condition, which would normally be necessary if the activity therein is to be accessible by persons with disabilities.*

***[For HCD 1 & HCD 2, DSA/AC] RECOMMEND** does not require mandatory acceptance, but identifies a suggested action that shall be considered for the purpose of providing a greater degree of accessibility to persons with disabilities.*

***[For HCD 1 & HCD 2, DSA/AC, SFM] REMODELING.** See "alter or alteration".*

REPAIR is the reconstruction or renewal of any part of an existing building for the purpose of its maintenance.

***RISER. [For HCD 1/AC]** See Chapter 11A, Section 1102A.18-R. **[For DSA/AC]** See Chapter 11A, Section 1102A.18-R and Chapter 11B, Section 1102B.*

***[For DSA/AC] RUNNING SLOPE** is the slope that is parallel to the direction of travel.*

SECTION 220 – S

---

* The Exception is shown in error. No definition for Public Accommodation is found in 1120A.16-P. This will be submitted for correction in Rulemaking by deleting the Exception.

SECTION 220 – S

[For HCD 1 & HCD 2, DSA/AC] SANITARY FACILITY *is any single water closet, urinal, lavatory, bathtub or shower, or a combination thereof, together with the room or space in which they are housed.*

[For HCD 2, DSA/AC] SHOPPING CENTER *is one or more sales establishments or stores.*

[For HCD 1 & HCD 2, DSA/AC] SHOULD. *See "Recommend."*

[For DSA/AC] SIDEWALK *is a surfaced pedestrian way contiguous to a street used by the public. See definition for "walk."*

[For DSA/AC] SIGNAGE *is displayed verbal, symbolic, tactile, and/or pictorial information.*

[For HCD 1 & HCD 2, DSA/AC] SINGLE-ACCOMMODATION SANITARY FACILITY *is a room that has not more than one of each type of sanitary fixture, is intended for use by only one person at a time, has no partition around the toilet, and has a door that can be locked on the inside by the room occupant.*

[For HCD 1 & HCD 2, DSA/AC] SITE *is a parcel of land bounded by a property line or a designated portion of a public right of way.*

[For HCD 1 & HCD 2, DSA/AC] SITE DEVELOPMENT *is "on-site" and "off-site" work, including, but not limited to, walks, sidewalks, ramps, curbs, curb ramps, parking facilities, stairs, planting areas, pools, promenades, exterior gathering or assembly areas and raised or depressed paved areas.*

SLEEPING ACCOMMODATIONS. [For HCD 1/AC] *See Chapter 11A, Section 1102A.19-S.* ***[For DSA/AC]*** *See Chapter 11A, Section 1102A.19-8 and Chapter 11B, Section 1102B.*

[For HCD 1/AC, DSA/AC] SLOPE. *See Chapter 11A, Section 1102A.19-S.*

[For HCD 2, DSA/AC] SPACE *is a definable area, eg., room, toilet room, hall, assembly area, entrance, storage room, alcove, courtyard, or lobby.*

SPECIAL ACCESS LIFT. [For HCD 1/AC] *See Chapter 11A, Section 1102A.19-S.* ***[For DSA/AC]*** *See Chapter 11A, Section 1102A.19-S and Chapter 11B, Section 1102B.*

STAGE. [See Chapter 4*****.]

[For HCD 1/AC, DSA/AC] STAIR RAILING. *See Chapter 11A, Section 1102A.19-S.*

[For HCD 1 & HCD 2, DSA/AC, SFM] STAIRWAY. *Two or more risers shall constitute a stairway.*

STORY is that portion of a building included between the upper surface of any floor and the upper surface of the floor next above, except that the topmost story shall be that portion of a building included between the upper surface of the topmost floor and the ceiling or roof above. If the finished floor level directly above a usable or unused under-floor space is more than 6 feet (1829 mm) above grade, as defined herein, for more than 50 percent of the total perimeter or is more than 12 feet (3658 mm) above grade, as defined herein, at any point, such usable or unused under-floor space shall be considered as a story.

STRUCTURE is that which is built or constructed, an edifice or building of any kind, or any piece of work artificially built up or composed of parts joined together in some definite manner.

***** The cross-reference to the definition for STAGE is not complete. The definition of STAGE is actually in Chapter 4, Section 405.1.2. This will submitted for correction in Rulemaking to read STAGE. [See Chapter 4, [for DSA/AC] Section 405.1.2].

SECTION 221 – T

[For HCD 2, DSA/AC] TACTILE *describes an object that can be perceived using the sense of touch.*

[For HCD 2, DSA/AC] TECHNICALLY INFEASIBLE *means, with respect to an alteration of a building or a facility, that it has little likelihood of being accomplished because existing structural conditions would require removing or altering a load-bearing member which is an essential part of the structural frame; or because other existing physical or site constraints prohibit modification or addition of elements, spaces, or features which are in full and strict compliance with the minimum requirements for new construction and which are necessary to provide accessibility.*
[For DSA/AC] TEMPORARY *shall mean buildings and facilities intended for use at one location for not more than one year and seats intended for use at one location for not more than 90 days.*

[For DSA/AC] TEXT TELEPHONE *is machinery or equipment that employs interactive graphic (i.e., typed) communications through the transmission of coded signals across the standard telephone network. Text telephones can include, for example, devices known as TTYs (telecommunication display devices) or computers.*

[For HCD 1/AC, DSA/AC] TOEBOARD. *See Chapter 11A, Section 1102A.20-T.*

[For HCD 1/AC, DSA/AC] TOWNHOUSE. *See Chapter 11A, Section 1102A.20-T.*

[For DSA/AC] TRANSIENT LODGING *is a building, facility, or portion thereof, excluding inpatient medical care facilities, that contains one or more dwelling units or sleeping accommodations. Transient lodging may include, but is not limited to, resorts, group homes, hotels, motels and dormitories.*

TREAD. [For HCD 1/AC] *See Chapter 11A, Section 1102A.20-T.* ***[For DSA/AC]*** *See Chapter 11A, Section 1102A.20-T and Chapter 11B, Section 1102B.*

TREAD DEPTH. [For HCD1/AC] *See Chapter 11A, Section 1102A.20-T.* ***[For DSA/AC]*** *See Chapter 11A, Section 1102A.20-T and Chapter 11B, Section 1102B.*

TREAD RUN. [For HCD 1/AC] *See Chapter 11A, Section 1102A.20-T.* ***[For DSA/AC]*** *See Chapter 11A, Section 1102A.20-T and Chapter 11B, Section 1102B.*

SECTION 222 – U

[For HCD 1 & HCD 2, DSA/AC, SFM, DSA/SS] UBC *shall mean the most recently adopted edition of the* Uniform Building Code *as published by the International Conference of Building Officials.*

References to other model code sections which are found in any adopted sections of the model code or Title 24, C.C.R., must be compared to the appropriate matrix adoption table to determine if the enforcing agency has adopted the model code section or a modified Title 24, C.C.R., section.

[For HCD 1 & HCD 2, DSA/AC, SFM] **UBC STANDARDS** are those standards published in Volume 3 of the *Uniform Building Code* promulgated by the International Conference of Building Officials, as adopted by this jurisdiction. (See Chapter 35.)

[For DSA/AC] UNREASONABLE HARDSHIP *exists when the enforcing agency finds that compliance with the building standard would make the specific work of the project affected by the building standard unfeasible, based on an overall evaluation of the following factors:*

1. *The cost of providing access.*

2. *The cost of all construction contemplated.*

3. *The impact of proposed improvements on financial feasibility of the project.*

4. The nature of the accessibility which would be gained or lost.

5. The nature of the use of the facility under construction and its availability to persons with disabilities. The details of any finding of unreasonable hardship shall be recorded and entered in the files of the enforcing agency.

SECTION 223 – V

[For HCD 1/AC, DSA/AC] VEHICULAR OR PEDESTRIAN ARRIVAL POINTS. *See Chapter 11A, Section 1102.22-V.*

[For DSA/AC] VEHICULAR WAY *is a route intended for vehicular traffic, such as a street, driveway or parking lot.*

SECTION 224 -- W

WALK. [For HCD 1/AC] *See Chapter 11A, Section 1102A.23-W.* ***[For DSA/AC]*** *See Chapter 11A, Section 1102A.23-W and Chapter 11B, Section 1102B.*

[For DSA/AC] WHEELCHAIR *is a chair mounted on wheels to be propelled by its occupant manually or with the aid of electric power, of a size and configuration conforming to the recognized standard models of the trade.*

[For DSA/AC] WHEELCHAIR OCCUPANT OR WHEELCHAIR USER *is an individual who, due to a physical impairment or disability, utilizes a wheelchair for mobility.*

[For DSA/AC] WORKING LEVEL OR WORKING AREA *is a platform, walkway, runway, floor or similar area fixed with reference to the hazard. This does not include ladders or portable or temporary means used for access, repair or maintenance, provided such means are removed immediately upon completion of the work.*

[For HCD 2, DSA/AC] WORK STATION *is an area defined by equipment and/or work surfaces intended for use by employees only, and generally for one or a small number of employees at a time. Examples include ticket booths; the employee side of grocery store checkstands; the bartender area behind a bar; the employee side of snack bars, sales counters and public counters; guardhouses; toll booths; kiosk vending stands; lifeguard stations; maintenance equipment closets; counter and equipment areas in restaurant kitchens; file rooms; storage areas; etc.*

SECTION 225 – X

No definitions.

SECTION 226 – Y

No definitions.

SECTION 227 – Z

No definitions.

Chapter 3
USE OR OCCUPANCY

For qualified historical buildings or properties, see Chapter 34, Division II.

SECTION 301 – OCCUPANCY CLASSIFIED

Every building, whether existing or hereafter erected, shall be classified by the building official according to its use or the character of its occupancy, as set forth in Table 3-A, as a building of one of the following occupancy groups:

Group A – Assembly (see Section 303.1.1)
Group B – Business (see Section 304.1)
Group C – Organized Camp (See Section 431A)
Group E – Educational (see Section 305.1)
Group F – Factory and Industrial (see Section 306.1)
Group H – Hazardous (see Section 307.1)
Group I – Institutional (see Section 308.1)
Group M – Mercantile (see Section 309.1)
Group R – Residential (see Section 310.1)
Group S – Storage (see Section 311.1)
Group U – Utility (see Section 312.1)

Any occupancy not mentioned specifically or about which there is any question shall be classified by the building official and included in the group that its use most nearly resembles, based on the existing or proposed fire and life hazard.

For changes in use, see Section 3405.

SECTION 310 – REQUIREMENTS FOR GROUP R OCCUPANCIES

310.13 Access to Buildings and Facilities.

310.13.1 [For DSA/AC] *General accessibility requirements can be found in Chapters 10, 11A, 11B, 11C and 30.*

SECTION 311 – REQUIREMENTS FOR GROUP S OCCUPANCIES

311.2 Construction, Height and Allowable Area.

311.2.3 Specific use provisions.

311.2.3.7 [For DSA/AC] Vehicle barriers to motor vehicle fuel dispensers. *For protection of motor vehicle fuel dispensers mounted at grade, see Section 5201.5.1, Part 9, Title 24 (California Fire Code).*

Chapter 4
SPECIAL USE AND OCCUPANCY

SECTION 405 – STAGES AND PLATFORMS

405.1 Scope.

405.1.2 Definitions. For the purpose of this chapter, certain terms are defined as follows:

***STAGE** is a space within a building used for entertainment or presentations, with a stage height of 50 feet (15 240 mm) or less. Curtains, drops, scenery, lighting devices and other stage effects are hung and not retractable except for a single lighting bank; single main curtain, border and legs; and single backdrop.

* In 405.1.2 the cross-reference to DSA/AC adoption of the definition of 'State' was mistakenly left out of the publication of the 2001 California Building Code. This will be submitted for correction in Rulemaking.

Chapter 5
GENERAL BUILDING LIMITATIONS

SECTION 509 – GUARDRAILS

[For DSA/AC] NOTE: *For accessibility requirements for guardrails where required in public buildings, public accommodations, commercial buildings, and publicly funded housing, see Chapter 11B, Section 1133B.5.7.2.*

509.2 Height.

[For DSA/AC] NOTE*: For accessibility requirements for guardrails height in public buildings, public accommodations, commercial buildings, and publicly funded housing, see Chapter 11B, Section 1133B.5.7.3.*

509.3 Openings.

[For DSA/AC] NOTE*: For accessibility requirements for guardrail openings in public buildings, public accommodations, commercial buildings, and publicly funded housing, see Chapter 11B, Section 1133B.5.7.4*

Chapter 10
MEANS OF EGRESS

NOTE: This chapter has been revised in its entirety.
For qualified historical buildings or properties, see Chapter 34, Division II.

SECTION 1001 – ADMINISTRATIVE

1001.1 Scope.

[For DSA/AC] NOTE: *For additional means of egress provisions adopted by DSA/AC, see Chapters 11A for public housing, 11B for public accommodations, 11C for motor vehicle fuel facilities and Chapter 34, Division II for historical buildings.*

SECTION 1003 – GENERAL

1003.2 System Design Requirements.

1003.2.3 Width.

1003.2.3.1 General. The width of the means of egress system or any portion thereof shall be based on the occupant load served.

1003.2.3.2 Minimum width. The width, in inches (mm), of any component in the means of egress system shall not be less than the product determined by multiplying the total occupant load served by such component by the applicable factor set forth in Table 10-B. In no case shall the width of an individual means of egress component be less than the minimum required for such component as specified elsewhere in this chapter.

Where more than one exit or exit-access doorway serves a building or portion thereof, such calculated width shall be divided approximately equally among the means of egress components serving as exits or exit-access doorways for that area.

1003.2.3.3 Maintaining width. If the minimum required width of the means of egress system increases along the path of exit travel based on cumulative occupant loads served, such width shall not be reduced or otherwise diminished to less than the largest minimum width required to that point along the path of exit travel.

> **EXCEPTION:** In other than Group H, Divisions 1, 2, 3 and 7Occupancies, the width of exterior exit doors from an exit enclosure may be based on the largest occupant load of all levels served by such exit enclosure multiplied by a factor of 0.2 (5.08) inch per person.

1003.2.3.4 Exiting from adjacent levels. No cumulative or contributing occupant loads from adjacent building levels need be considered when determining the required width of means of egress components from a given level.

Where an exit enclosure from an upper floor and a lower floor converge at an intermediate floor, the width of the exit from the intermediate floor shall be based on the sum of the occupant loads of such upper and lower floors.

1003.2.3.5 Two-way exits. Where exit or exit-access doorways serve paths of exit travel from opposite directions, the width of such exit or exit-access doorways shall be based on the largest occupant load served. Where such exit or exit-access doorways are required to swing in the direction of exit travel by Section 1003.3.1.5, separate exit width for each path of exit travel shall be provided based on the occupant load of the area that is served.

1003.2.8 Means of egress identification.

1003.2.8.1 ***[For DSA/AC & SFM] Visual exit signs.*** For the purposes of Section *1003.2.8.1*, the term "exit sign" shall mean those required signs that *visually* indicate the path of exit travel within the means of egress system.

1003.2.8.2 Where required. The path of exit travel to and within exits in a building shall be identified by exit signs conforming to the requirements of Section 1003.2.8. Exit signs shall be readily visible from any direction of approach. Exit signs shall be located as necessary to clearly indicate the direction of egress travel. No point shall be more than 100 feet (30 480 mm) from the nearest visible sign.

EXCEPTIONS:
1. Main exterior exit doors that obviously and clearly are identifiable as exit doors need not have exit signs when approved by the building official.

2. Rooms or areas that require only one exit or exit access.

3. In Group R, Division 3 Occupancies and within individual units of Group R, Division 1 Occupancies.

4. Exits or exit access from rooms or areas with an occupant load of less than 50 where located within a Group I, Division 1.1, 1.2 or 2 Occupancy or a Group E, Division 3 day-care occupancy.

1003.2.8.3 Graphics. The color and design of lettering, arrows and other symbols on exit signs shall be in high contrast with their background. Exit signs shall have the word "EXIT" on the sign in block capital letters not less than 6 inches (152 mm) in height with a stroke of not less than 3/4 inch (19 mm). The word "EXIT" shall have letters having a width of not less than 2 inches (51 mm) except for the letter "I" and a minimum spacing between letters of not less than 3/8 inch (9.5 mm). Signs with lettering larger than the minimum dimensions established herein shall have the letter width, stroke and spacing in proportion to their height.

1003.2.8.4 Illumination. Exit signs shall be internally or externally illuminated. When the face of an exit sign is illuminated from an external source, it shall have an intensity of not less than 5 foot candles (54 lx) from either of two electric lamps. Internally illuminated signs shall provide equivalent luminance and be listed for the purpose.

EXCEPTIONS:
1. Approved self-luminous signs that provide evenly illuminated letters that have a minimum luminance of 0.06 foot lambert (0.21 cd/m2).

2. [For SFM] *Approved internally illuminated exit signs which use light-emitting diodes or electroluminescent lamps are not required to have two electric lamps.*

1003.2.8.5 Power source. All exit signs shall be illuminated at all times. To ensure continued illumination for a duration of not less than 11/2 hours in case of primary power loss, the exit signs shall also be connected to an emergency electrical system provided from storage batteries, unit equipment or an on-site generator set, and the system shall be installed in accordance with the Electrical Code. For high-rise buildings, see Section 403.

EXCEPTIONS:
1. Approved self-luminous signs that provide continuous illumination independent of an external power source.

2. [For SFM] *The power supply for internally illuminated exit signs and exit path marking, which do not contain electric lamps, shall normally be provided by the premises. wiring system. In the event of its failure, power shall be automatically provided from storage batteries or an on-site generator set and the system shall be installed in accordance with the California Electrical Code.*

1003.2.8.6 [For DSA/AC & SFM] Tactile exit signage. *For the purposes of Section 1003.2.8.6, the term "tactile exit signs" shall mean those required signs that comply with Section *1117B.5.1-B.*

1003.2.8.6.1 [For DSA/AC & SFM] Where required. *Tactile exit signs shall be required at the following locations:*

1*. Each grade-level exterior exit door shall be identified by a tactile exit with the word, "EXIT."*

2*. Each exit door that leads directly to a grade-level exterior exit by means of a stairway or ramp shall be identified by a tactile exit sign with the following words as appropriate:*

***** In 1003.2.8.6 (Tactile exit signage) cross-reference to 1117B.5.1-B is incorrect. Cross-reference will be submitted for correction in Rulemaking to read 1117B.5.1 Item 2.

A. *"EXIT STAIR DOWN"*

B. *"EXIT RAMP DOWN"*

C. *"EXIT STAIR UP"*

D. *"EXIT RAMP UP"*

3*. Each exit door that leads directly to a grade-level exterior exit by means of an exit enclosure or an exit passageway shall be identified by a tactile exit sign with the words, "EXIT ROUTE."*

4*. Each exit access door from an interior room or area to a corridor or hallway that is required to have a visual exit sign, shall be identified by a tactile exit sign with the words "EXIT ROUTE."*

5*. Each exit door through a horizontal exit shall be identified by a sign with the words, "TO EXIT."*

1003.2.10 Building accessibility. In addition to the requirements of this chapter, means of egress, which provide access to, or egress from, buildings for persons with disabilities, shall also comply with the requirements of Chapter 11.

EXCEPTIONS:
1. [For HCD 1/AC, DSA/AC] *For housing accessibility, see Chapter 11A.*

2. [For DSA/AC] *For accessibility to public accommodations, commercial buildings and publicly funded housing, see Chapter 11B.*

1003.3 Means of egress components. Doors, gates, stairways and ramps that are incorporated into the design of any portion of the means of egress system shall comply with the requirements of this section. These means of egress components may be selectively included in the exit access, the exit or the exit discharge portions of the means of egress system.

1003.3.1 Doors.

1003.3.1.3 Width and height.

[For DSA/AC] NOTE: *For accessibility requirements for width and height of doors in housing accessibility, see Chapter 11A, Section 1120A.2.2, and for public buildings, public accommodations, commercial buildings and publicly funded housing, see Chapter 11B, Section 1133B.2.2.*

1003.3.1.6 Floor Level at Doors

1003.3.1.6.1 [For DSA/AC] Thresholds.

NOTE: *For accessibility requirements for thresholds in accessible housing, see Chapter 11A, Section 1120A.2.4, and for public buildings, public accommodations, commercial buildings and publicly funded housing, see Chapter 11B, Section 1133B.2.4.1.*

***1003.3.1.8 Type of lock or latch.** Regardless of the occupant load served, exit doors shall be openable from the inside without the use of a key or any special knowledge or effort.

EXCEPTIONS:
1. In Groups A, Division 3; B; F; M and S Occupancies and in all churches, key-locking hardware may be used on the main exit where the main exit consists of a single door or pair of doors where there is a readily visible, durable sign on or adjacent to the door stating, "THIS DOOR MUST REMAIN UNLOCKED DURING BUSINESS HOURS". ***[For SFM]*** *THIS DOOR TO REMAIN UNLOCKED WHENEVER THE BUILDING IS OCCUPIED.* The sign shall be in letters not less than 1 inch (25 mm) high on a contrasting background. When unlocked, the single door or both leaves of a pair of doors must be free to swing without operation of any latching device. The use of this exception may be revoked by the building official ***[for HCD 1 & HCD 2]*** *enforcing agency for due cause.*

2. Exit doors from individual dwelling units; ***[for SFM]*** *buildings or rooms*; Group R, Division 3 congregate residences; and guest rooms of Group R Occupancies having an occupant load of 10 or less may be provided with a night latch, dead bolt or security chain, provided such devices are openable from the inside without the use of a key or tool ***[for SFM]*** *or special knowledge or effort* and

*****The cross-reference Note is shown in error. The provisions for type of lock or latch were intended to be relocated to Chapter 11B, but instead were not relocated. DSA/AC adopts 1003.3.1.8 without the note. This will be submitted for correction in Rulemaking.

3. [For SFM] *Mental, penal or corrective institutions where supervisory personnel are continually on duty and effective provisions are made to remove occupants in case of fire or other emergency.*

[For SFM*] *Bars, grilles, grates or similar devices placed over any required exit door shall be openable from the inside without the use of a key, tool, or any special knowledge or effort. Such bars, grilles, grates or similar devices shall be equipped with an approved release device for use by the fire department only on the exterior side for the purpose of fire department emergency access, when required by the authority having jurisdiction.*

Manually operated edge- or surface-mounted flush bolts and surface bolts or any other type of device that may be used to close or restrain the door other than by operation of the locking device shall not be used. Where exit doors are used in pairs and approved automatic flush bolts are used, the door leaf having the automatic flush bolts shall have no doorknob or surface-mounted hardware. The unlatching of any leaf shall not require more than one operation.

EXCEPTIONS:
1. Group R, Division 3 Occupancies.

2. Where a pair of doors serving a room not normally occupied is needed for the movement of equipment, manually operated edge- or surface-mounted bolts may be used.

*****[For DSA/AC] NOTE:*** *For accessibility requirements for type of lock or latch in public buildings, public accommodations, commercial buildings and publicly funded housing, see Chapter 11B, Section 1133B.2.1.*

1003.3.1.10 Special egress-control devices.

*******A sign shall be provided on the door located above and within 12 inches (305 mm) of the panic bar or other door-latching hardware reading:

"KEEP PUSHING" THIS DOOR WILL OPEN IN
_____ SECONDS "ALARM WILL SOUND"

Sign lettering shall be at least 1 inch (25mm) in height and shall have a stroke of not less than l/8 inch (3.2 mm).

Regardless of the means of deactivation, relocking of the egress-control device shall be by manual means only at the door.

[For SFM & DSA/AC] *A tactile sign shall also be provided in Braille and raised characters, which complies with Section ****1117B.5.1-B*

1003.3.3 Stairways

1003.3.3.6.1 Handrails.

1003.3.3.6.1.1 [For HCD 1 w/exceptions; HCD 2 w/exceptions 1, 2, 4 and 5; HCD 1/AC w/exception 6] Required handrails.

[For DSA/AC] NOTE: *For Accessibility requirements for handrails in accessible housing, see Chapter 11A, Section 1120A.4.1, and for public buildings, public accommodations, commercial buildings and publicly funded housing, see Chapter 11B, Section 1133B.4.1.1.*

1003.3.3.13 Stairway Identification

1003.3.3.13.1 [For SFM & DSA/AC] Tactile stair level identification sign. *Tactile stair level identification signs that comply with ****1117B.5.1-B shall be located at each floor level landing in all enclosed stairways in buildings two or more stories in height to identify the floor level. At exit discharge level, the sign shall include a raised five pointed star located to the left of the identifying floor level. The outside diameter of the star shall be the same as the height of the raised characters.*

---

* DSA/AC should be shown as adopting the same provision as SFM for bars, grilles, etc.
** Note is shown in error. Provisions for type of lock or latch were intended to be relocated to Chapter 11B.
*** Text is not adopted by DSA/AC, included for informational purposes only.
**** Section reference should read 1117B.5.1 Item 2. All footnotes will be submitted for correction in Rulemaking.

1003.3.4.4 Landings. Ramps having slopes steeper than 1 unit vertical in 20 units horizontal (5% slope) shall have landings at the top and bottom, and at least one intermediate landing shall be provided for each 5 feet (1524 mm) of vertical rise measured between the horizontal planes of adjacent landings. Top landings and intermediate landings shall have a dimension measured in the direction of ramp run of not less than 5 feet (1524 mm). Landings at the bottom of ramps shall have a dimension in the direction of ramp run of not less than 6 feet (1829 mm).*

Doors in any position shall not reduce the minimum dimension of the landing to less than 42 inches (1067 mm) and shall not reduce the required width by more than 7 inches (178 mm) ***[for HCD 1/AC**]*** *3 inches (76 mm)* when fully open.

Where ramp access is provided to comply with the requirements of Chapter 11 and a door swings over a landing, the landing shall extend at least 24 inches (610 mm) beyond the latch edge of the door, measured parallel to the door in the closed position, and shall have a length measured in the direction of travel through the doorway of not less than 5 feet (1524 mm).***

> *******For DSA/AC] NOTE:*** *For accessibility requirements for landings in public buildings, public accommodations, commercial buildings and publicly funded housing, see Chapter 11B, Section 1133B.5.4.1.*

1003.3.4.6 Guardrails.

> ***[For DSA/AC] NOTE:*** *For accessibility requirements for guardrails in public buildings, public accommodations, commercial buildings and publicly funded housing, see Chapter 11B, Section 1133B.5.7.1.*

SECTION 1005 – THE EXIT

*******1005.1 General.** The exit is that portion of the means of egress system between the exit access and the exit discharge or the public way. Components that may be selectively included in the exit include exterior exit doors, exit enclosures, exit passageways and horizontal exits, in addition to those common means of egress components described in Section 1003.3.

SECTION 1008 – REVIEWING STANDS, GRANDSTANDS, BLEACHERS, AND FOLDING AND TELESCOPING SEATING

1008.5 General Requirements.
1008.5.7 Guardrails.

> ***[For DSA/AC] NOTE:*** *For accessibility requirements for perimeter guardrails in public buildings, public accommodations, commercial buildings and publicly funded housing, see Chapter 11B, Section 1133B.5.7.5.*

---

* DSA/AC does not adopt paragraph one. A note will be submitted in Rulemaking to correctly state that DSA/AC does not adopt paragraph one.
** DSA/AC should be included in paragraph 2 for doors. This will be submitted in Rulemaking to correct by adding DSA/AC adoption acronym.
*** DSA/AC does not adopt paragraph three (3). A note will be submitted in Rulemaking to correctly state that DSA/AC does not adopt paragraph three.
**** Note is shown in error. The provisions for doors were intended to be relocated to Chapter 11B, but remained in Chapter 10. A Note will be submitted in Rulemaking correct by deleting the Note.
***** DSA/AC adopts 1005.1, by reference in Chapter 2, definition of EXIT. DSA/AC adoption acronym was mistakenly left out of the publication of the 2001 CA Building Code. This will be submitted for correction in Rulemaking by adding DSA/AC adoption cross-reference in 1005.1.

Chapter 11
ACCESSIBILITY

For qualified historical buildings or properties, see Chapter 34, Division II.

NOTE: *This chapter is not applicable in California.*
See Chapters 11A, 11B and 11C.

Chapter 11A
HOUSING ACCESSIBILITY

SECTION 1101A [FOR HCD 1/AC] – SCOPE

The application of authority and scope of this chapter are referenced in Section 101.17.9. The provisions of Chapter 11A, applied through HCD 1/AC, are applicable to all covered multifamily dwellings except public use area, public accommodations and other areas which are subject to DSA/AC.

1101A.1 General. *Buildings or portions of buildings shall be accessible to persons with disabilities as required by this chapter.*

[For DSA/AC] *Regulations adopting building standards necessary to implement, interpret or make specific the provisions of Government Code Section 12955.1 (d) shall be developed by the State Architect for public housing. See Section 101.17.11 for application of DSA/AC adopted provisions.*

SECTION 1102A [FOR HCD 1/AC & DSA/AC] – DEFINITIONS

For the purpose of this chapter, certain terms are defined as follows:

1102A.1-A ACCESSIBLE *for covered multifamily dwellings is the public- or common-use areas of the building that can be approached, entered and used by individuals with physical disabilities. The phrase "readily accessible to and usable by" is synonymous with accessible.*

ACCESSIBLE ROUTE OF TRAVEL *is a continuous unobstructed path connecting all accessible elements and spaces in an accessible building or facility that can be negotiated by a person with a severe disability using a wheelchair, and that is also safe for and usable by persons with other disabilities.*

ACCESSIBILITY *is the combination of various elements in a building or area, which allows access, circulation and the full use of the building and facilities by persons with physical disabilities.*

ADAPTABLE DWELLING UNIT *is an accessible dwelling unit within a covered multifamily building as designed with elements and spaces allowing the dwelling unit to be adapted or adjusted to accommodate the user. See Sections 1109A and 1112A.*

ASSISTIVE DEVICE *is an aid, tool or instrument used by persons with disabilities to assist in activities of daily living. Examples of assistive devices include tongs, knob-turners and oven-rack pusher/pullers.*

AUTOMATIC DOOR *is a door equipped with a power-operated mechanism and controls that open and close the door automatically upon receipt of a momentary actuating signal. The switch that begins the automatic cycle may be a photoelectric device, floor mat or manual switch.*

1102A.2-B BATHROOM *is, for the purposes of this chapter, a room which includes a water closet (toilet), lavatory (sink), and/or a bathtub and/or a shower. It does not include single-fixture facilities or those with only a water closet and lavatory. It does include a compartmented bathroom. A compartmented bathroom is one in which the fixtures are distributed among interconnected rooms. A compartmented bathroom is considered a single unit and is subject to the requirements for bathrooms for disabled persons.*

BUILDING ENTRANCE ON AN ACCESSIBLE ROUTE *is an accessible entrance to a building that is connected by an accessible route to public transportation stops, to parking or passenger loading zones, or to public streets or sidewalks, if available.*

1102A.3-C COMMON-USE AREAS *are private use areas within multifamily residential facilities where the uses of these areas are limited exclusively to owners, residents and their guests. The areas may be defined as rooms or spaces or elements inside or outside of a building.*

COVERED MULTIFAMILY DWELLINGS *are all dwelling units in buildings consisting of three or more dwelling units or four or more condominium units. Covered Multifamily Dwellings include dwelling units listed in Section 101.17.9. Dwelling units within a single structure separated by firewalls do not constitute separate buildings.*

> ***[For DSA/AC] NOTE:*** *For buildings and complexes containing publicly funded dwelling units, see Section 1111B.5*

CROSS SLOPE *is the slope that is perpendicular to the direction of travel*

CURB CUT *is an interruption of a curb at a pedestrian way, which separates surfaces that are substantially at the same elevation.*

CURB RAMP *is a sloping pedestrian way, intended for pedestrian traffic, which provides access between a walk or sidewalk to a surface located above or below an adjacent curb face.*

1102A.4-D DETECTABLE WARNING *is a standardized surface or feature built into or applied to walking surfaces or other elements to warn visually impaired persons of hazards in the path of travel. Only approved DSA/AC detectable warning products and directional surfaces shall be installed as provided in the California Code of Regulations (CCR), Title 24, Part 1, Articles 2, 3 and 4. Refer to CCR Title 24, Part 12, Chapter 12-11A and B, for building and facility access specifications for product approval for detectable warning products and directional surfaces.*

> ***[For DSA/AC] NOTE:*** *Detectable warning products and directional surfaces installed after January 1, 2001, shall be evaluated by an independent entity, selected by the Department of General Services, Division of the State Architect-Access Compliance, for all occupancies, including transportation and other outdoor environments, except that when products and surfaces are for use in residential housing, evaluation shall be in consultation with the Department of Housing and Community Development. See Government Code Section 4460.*

DWELLING UNIT *is a single unit of residence for a family of one or more persons. Examples of dwelling units covered by this chapter include condominiums, an apartment unit within an apartment building, and other types of dwellings in which sleeping accommodations are provided but toileting or cooking facilities are shared by occupants of more than one room or portion of the dwelling. Examples of the latter include dormitory rooms and sleeping accommodations in shelters intended for occupancy as residences for homeless persons.*

1102A.5-E EQUIVALENT FACILITATION *is an alternate means of complying with the literal requirements of these standards and specifications that provides access in terms of the purpose of these standards and specifications.*

> ***NOTE:***
> ***1.*** *See Section 101.2, Purpose.*
>
> ***2.*** *In determining equivalent facilitation, consideration shall be given to means that provide for the maximum independence of persons with disabilities while presenting the least risk of harm, injury or other hazard to such persons or others.*

1102A.6-F FACILITY (or FACILITIES) *is a building, structure, room, site, complex or any portion thereof, that is built, altered, improved or developed to serve a particular purpose.*

1102A.7-G GRAB BAR *is a bar for the purpose of being grasped by the hand for support.*

GRADE. *See Chapter 2, Section 208-G.*

GROUND FLOOR *is the floor of a building with a building entrance on an accessible route. A building may have one or more ground floors. Where the first floor containing dwelling units in a building is above grade, all units on that floor must be served by a building entrance on an accessible route. This floor will be considered to be a ground floor.*

1102A.8-H HANDRAIL *is a device to be used as a hand hold.*

1102A.9-I INDEPENDENT ENTITY. *See Chapter 2, Section 210-I.*

INTERNATIONAL SYMBOL OF ACCESSIBILITY *is that symbol adopted by Rehabilitation International's 11th World Congress for the purpose of indicating that buildings and facilities are accessible to persons with disabilities. See Chapter 11B, Figure 11B-6.*

1102A.10-J *(No definitions)*

1102A.11-K KICK PLATE *is an abrasion-resistant plate affixed to the bottom portion of a door to prevent a trap condition and protect its surface.*

1102A.12-L LEVEL AREA *is a specified surface that does not have a slope in any direction exceeding ¼ inch (6.4 mm) in 1 foot (305 mm) from the horizontal (2.083 percent gradient).*

LIFT, SPECIAL ACCESS. *See "special access lifts."*

1102A.13-M MARKED CROSSING *is a crosswalk or other identified path intended for pedestrian use in crossing a vehicular way.*

MULTISTORY DWELLING UNIT *is a dwelling unit with finished living space located on one floor and the floor or floors immediately above or below it.*

1102A.14-N NEWLY CONSTRUCTED *is a building that has never before been used or occupied for any purpose.*

NOSE, NOSING, *is that portion of a tread projecting beyond the face of the riser immediately below.*

1102A.15-O OPEN RISER *is the air space between a tread projecting beyond the face of the riser immediately below.*

1102A.16-P PASSAGE DOOR *is a door other than an exit door through which persons may traverse.*

PEDESTRIAN *is an individual who moves in walking areas with or without the use of walking, assistive devices such as crutches, leg braces, wheelchairs, etc.*

PEDESTRIAN RAMP *is a sloping path of travel intended for pedestrian traffic and as differentiated from a curb ramp.*

PEDESTRIAN WAY *is a route by which a pedestrian may pass.*

PERSON WITH DISABILITY *is an individual who has a physical impairment, including impaired sensory, manual or speaking abilities, that results in a functional limitation in gaining access to and using a building or facility.*

PERSONS WITH PHYSICAL DISABILITIES *means, as with respect to a person, a physical or mental impairment which substantially limits one or more major life activities, a record of such an impairment, or being regarded as having such an impairment. This term does not include current, illegal use of or addiction to a controlled substance. For purposes of these guidelines, an individual shall not be considered to have a physical disability solely because that individual is a transvestite. As used in this definition "physical or mental impairment" includes:*

Impairments which affect ambulation due to cerebral palsy, poliomyelitis, spinal cord injury, amputation, arthritis, cardiac and pulmonary conditions, and other conditions or diseases which reduce mobility, including aging. Any physiological disorder or condition, cosmetic disfigurement, or anatomical loss affecting one or more of the following body systems: neurological; musculoskeletal; special sense organs; respiratory, including speech organs; cardiovascular; reproductive; digestive; genito-urinary; hemic and lymphatic; skin; and endocrine; or

Any mental or psychological disorder, such as mental retardation, organic brain syndrome, emotional or mental illness, and specific learning disabilities. The term "physical or mental impairment" includes, but is not limited to, such diseases and conditions as orthopedic, visual, speech and hearing impairments; cerebral palsy; autism; epilepsy; muscular dystrophy; multiple sclerosis; cancer; heart disease; diabetes; human immunodeficiency virus infection; mental retardation; emotional illness; drug addiction (other than addiction caused by current, illegal use of a controlled substance) and alcoholism. These guidelines are designed to make units accessible or adaptable for people with physical disabilities.

"Major life activities" means functions such as caring for one's self, performing manual tasks, walking, seeing, hearing, speaking, breathing, learning and working.

"Has a record of such an impairment" means the person has a history of, or has been misclassified as having, a mental or physical impairment that substantially limits one or more major life activities

"Is regarded as having an impairment" means:

The person has a physical or mental impairment that does not substantially limit one or more major life activities but that is treated by another person as constituting such a limitation:

The person has a physical or mental impairment that substantially limits one or more major life activities only as a result of the attitudes of others toward such impairment; or

The person has none of the impairments defined in Section 1102A.16-P but is treated by another person as having such impairment.

***POWDER ROOM** is a room containing only a water closet (toilet) and lavatory (sink).*

***PRIMARY ENTRY** is the principal entrance through which most people enter the building, as designated by the building official.*

***PRIMARY ENTRY LEVEL** is the floor or level of the building on which the primary entry is located.*

***PUBLIC-USE AREAS** means interior or exterior rooms or spaces of a building that are made available to the general public and does not include Common Use Areas as defined in Section 1102A.3-C. Public Use Areas may be provided at a building that is privately or publicly owned.*

***1102A.17-Q** (No definitions)*

***1102A.18-R RAMP.** See "Pedestrian Ramp," Section 1102A.16-P.*

***[For DSA/AC] RECOMMENDED.** See "Recommend," Chapter 2, Section 202.*

***RISER** is the vertical distance from the top of a tread to the top of the next higher tread.*

***1102A.19-S SLEEPING ACCOMMODATIONS** are rooms in which people may sleep; for example, dormitory and hotel or motel guestrooms or suites.*

***SLOPE** is, for the purpose of covered multifamily buildings, the relative steepness of the land between two points and is calculated as follows: The horizontal distance and elevation change between the two points (e.g., an entrance and a passenger loading zone). The difference in elevation is divided by the distance and the resulting fraction is multiplied by 100 to obtain the percentage of slope. For example: if a principal entrance is 10 feet (3048 mm) from a passenger loading zone, and the principal entrance is raised 1 foot (305 mm) higher than the passenger loading zone, then the slope is 1/10 x 100 = 10 percent.*

***SPECIAL ACCESS LIFT** is a hoisting and lowering mechanism equipped with a car or platform, or support which serves two landings of a building or structure and is designed to carry a passenger or passengers and (or) luggage or other material a vertical distance as may be allowed by Section 1110A.2.*

***STAIR RAILING** is a vertical barrier constructed along the open side or sides of stairways and as intermediate stair rails where required on wide stairways.*

***1102A.20-T TOEBOARD** is a vertical barrier erected along the open edges of floor openings or floor holes, platforms and runways.*

***TOWNHOUSE** is a multistory dwelling unit.*

TREAD *is the horizontal member of a step.*

TREAD DEPTH *is the horizontal distance from front to back of tread, including nosing when used.*

TREAD RUN *is the horizontal distance from the leading edge of a tread to the leading edge of an adjacent tread.*

1102A.21-U *(No definitions)*

1102A.22-V VEHICULAR OR PEDESTRIAN ARRIVAL POINTS *are public or resident parking areas, public transportation stops, passenger loading zones, and public streets or sidewalks.*

1102A.23-W WALK *is a surfaced pedestrian way not located contiguous to a street used by the public. (See definition for "sidewalk.")*

WHEELCHAIR *is a chair mounted on wheels to be propelled by its occupant manually or with the aid of electric power, of a size and configuration conforming to the recognized standard models of the trade.*

WHEELCHAIR OCCUPANT OR WHEELCHAIR USER *is an individual who, due to a physical impairment or disability, utilizes a wheelchair for mobility.*

1102A.24-X *(No definitions)*

1102A.25-Y *(No definitions)*

1102A.26-Z *(No definitions)*

SECTION 1103A [FOR HCD 1/AC & DSA/AC] – BUILDING ACCESSIBILITY

1103A.1 [For HCD 1/AC] Where Required.

1103A.1.1 [For HCD 1/AC] General. *Accessibility to buildings or portions of buildings and facilities shall be provided for all occupancy classifications identified in Section 101.17.9 or 101.17.11 except as modified by this chapter.*

SECTION 1104A [FOR HCD 1/AC & DSA/AC] – GROUP U OCCUPANCIES

1104A.1 [For HCD 1/AC] General. *Group U, Division 1 private garages which are accessory to dwelling units required to be adaptable shall be accessible.*

> ***EXCEPTION:*** *A private garage which serves a single covered multifamily dwelling unit is an accessible garage if a person with a disability can exit the dwelling unit's accessible entry door and enter the garage from the driveway.*

**SECTION 1105A [FOR HCD 1/AC] – GROUP R OCCUPANCIES*

1105A.1 [For HCD 1/AC] General. *In Group R Occupancies that are covered multifamily dwellings shall be accessible as provided in this chapter. Public-use and common-use areas serving adaptable dwelling units shall be accessible.*

> ***EXCEPTION:*** *Multistory dwelling units in nonelevator buildings are not subject to these requirements because, in such cases, there is no ground-floor unit.*

***** In 1105A (Group R Occupancies) this section is not adopted by DSA/AC. A cross-reference in the form of a Note will be submitted for correction in Rulemaking to clearly state that this section is not adopted by DSA/AC.

SECTION 1106A [FOR HCD 1/AC & DSA/AC] – DOOR SIGNAL DEVICES

1106A.1 [For HCD 1/AC] General. *Every primary entrance to a dwelling unit in buildings containing three or more dwelling units shall be provided with a door buzzer, bell, chime or equivalent installation, mounted a maximum of 48 inches (1219 mm) above the floor, connected to permanent wiring.*

SECTION 1107A [FOR HCD 1/AC & DSA/AC] – DESIGN AND CONSTRUCTION

1107A.1 General.

1107A.1.1 [For HCD 1/AC] *When accessibility is required, it shall be designed and constructed as provided in Chapters 11A and 30 of this building code with California amendments.*

1107A.1.2 [For DSA/AC] *When accessibility is required, for publicly funded construction of housing, it shall be designed and constructed as provided in Chapters 11A, 11B and 30 of this building code with California amendments.*

1107A.2 [For HCD 1/AC & DSA/AC] Accessible Route of Travel.

1107A.2.1 [For HCD1/AC & DSA/AC] *When a building, or portion of a building, is required to be accessible or adaptable, an accessible route of travel shall be provided to all portions of the building, to accessible building entrances and between the building and the public way. Except within an individual dwelling unit, an accessible route of travel shall not pass through kitchens, storage rooms, restrooms, closets or other spaces used for similar purposes. At least one accessible route within the boundary of the site shall be provided from public transportation stops, accessible parking and accessible passenger loading zones, and public streets or sidewalks to the accessible building entrance they serve. The accessible route shall, to the maximum extent feasible, coincide with the route for the general public. At least one accessible route shall connect accessible buildings, facilities, elements and spaces that are on the same site. At least one accessible route shall connect accessible building or facility entrances with all accessible spaces and elements and with all accessible dwelling units within the building or facility. An accessible route shall connect at least one accessible entrance of each accessible dwelling unit with those exterior and interior spaces and facilities that serve the accessible dwelling unit.*

1107A.3 [For HCD 1/AC & DSA/AC] Multiple Accessible Routes. *Where more than one route of travel is provided, all routes shall be accessible.* ***[For DSA/AC]*** *See Section 114B.1.2.*

> ***EXCEPTION:*** *Where an elevator is provided for vertical access, only one elevator is required. Where more than one elevator is provided, all elevators shall be accessible.*

1107A.4 [For HCD 1/AC & DSA/AC w/o Except. 1] Pedestrian Way Width. *All walks, sidewalks, halls, corridors, aisles and other spaces that are part of an accessible route shall provide a minimum clear width of 48 inches (1219 mm), except at doors.*

> ***EXCEPTIONS:***
> ***1.*** *Covered multifamily dwelling units shall provide a minimum clear width of 36 inches (914mm), except at doors.*
>
> ***2.*** *For sidewalks or walks serving individual dwelling units in covered multifamily buildings, see Section 1120A.6.*

1107A.5 [For HCD 1/AC & DSA/AC] Ground Floors Above Grade. *When the first floor containing one or more covered dwelling units is a floor above grade, all units must be served by an accessible route.*

> ***EXCEPTION:*** *In multistory dwelling units, i.e., townhouse-type construction, access is not required for buildings without elevators. In multistory dwelling units in buildings with elevators, the story of the unit that is served by the building elevator is the primary entry to the unit. The primary floor shall contain a bathroom or powder room usable to a person in a wheelchair.*

1107A.6 [For HCD 1/AC & DSA/AC] Participation Areas. *Access shall be provided to elements listed in Section 1104B.4.3, Participation Areas.*

1107A.7 [For HCD 1/AC & DSA/AC] Headroom Clearance. *Walks, halls, corridors, passageways, aisles and other circulation spaces shall have 80 inches (2032 mm) minimum clear headroom. If vertical clearance of an area adjoining an accessible route is reduced to less than 80 inches (2032 mm) nominal dimension, a guardrail or other barrier having its leading edge at or below 27 inches (686 mm) above the finished floor shall be provided.*

1107A.8 [For HCD 1/AC & DSA/AC] Changes Greater than One-half Inch. *When an accessible route has changes in level greater than ½ inch (12.7 mm), then a curb ramp, ramp, elevator or special access lift shall be provided. Stairs shall not be part of an accessible route.*

1107A.9 [For HCD 1/AC & DSA/AC] Emergency Egress. *Accessible routes serving any accessible space or element shall also serve as a means of egress for emergencies or connect to an accessible place of refuge. Such accessible routes and places of refuge shall comply with the requirements established by the enforcement authority having jurisdiction.*

1107A.10 [For HCD 1/AC & DSA/AC] Primary Entry Access. *Covered multifamily buildings shall comply with Section 1119A.*

1107A.11 [For HCD 1/AC & DSA/AC] Separate Ground-floor Unit Entrances. *When a ground-floor unit of a building has a separate entrance, each such ground-floor unit shall be served by an accessible route, except for any unit where the terrain or unusual characteristics of the site prohibit the provision of an accessible route to the entrance of that unit.*

1107A.12 [For HCD 1/AC & DSA/AC] Multiple Entrances. *Only one entrance to covered multifamily buildings is required to be accessible to any one ground floor of a building, except in cases where an individual dwelling unit has a separate exterior entrance or where the building contains clusters of dwelling units with each cluster sharing a different exterior entrance. In these cases, more than one entrance may be required to be accessible, as determined by analysis of the site. In every case, the accessible entrance shall be on an accessible route to the covered dwelling units it serves.*

1107A.13 [For HCD 1/AC & DSA/AC] Site Impracticality.

1107A.13.1 [For HCD 1/AC] General. *Covered multifamily dwellings with elevators shall be designed and constructed to provide at least one accessible entrance on an accessible route, regardless of terrain or unusual characteristics of the site. Covered multifamily dwellings without elevators shall be designed and constructed to provide at least one accessible entrance on an accessible route unless terrain or unusual characteristics of the site prevent an accessible route based on the conditions listed below.*

1107A.13.2 [For HCD 1/AC & DSA/AC] Accessible entrance. *Regardless of site considerations described in Section 1119A, an accessible entrance on an accessible route is practical when there is an elevator connecting the parking area with the dwelling units on a ground floor. (In this case, those dwelling units on the ground floor served by an elevator, and at least one of each type of public- and common-use areas, would be subject to these requirements.)*

1107A.13.3 [For HCD 1/AC & DSA/AC] Elevator building. *When a building elevator or elevators are provided as a means of access to dwelling units other than dwelling units on a ground floor, then the building is an elevator building. All dwelling units become covered multifamily dwelling units in that building. The elevator in that building must provide accessibility to all dwelling units in the building, regardless of the slope of the natural terrain.*

1107A.13.4 [For HCD 1/AC & DSA/AC] Elevated walkway. *When an elevated walkway is planned between a building entrance and a vehicular or pedestrian arrival point, and the planned walkway has a slope no greater than 10 percent (1 unit vertical in 10 units horizontal), the floor being served by the elevated walkway becomes a ground floor and accessibility to all covered multifamily dwellings on that ground floor is required.*

1107A.13.5 [For HCD 1/AC & DSA/AC] Slope of finished grade. *If the slope of the finished grade between covered multifamily dwellings and a public- or common-use facility (including parking) exceeds 1 unit vertical in 12 units horizontal (8.33% slope), or where other physical barriers (natural or artificial) or legal restrictions, all of which are outside the control of the owner, prevent the installation of an accessible route of travel, an acceptable alternative is to provide access via a vehicular route, provided necessary site provisions such as parking spaces and curb ramps are provided at the public- or common-use facility.*

1107A.14 [For HCD 1/AC & DSA/AC] Signs. *See Section 1117A.3.*

1107A.15 Adaptable Dwelling Units.

1107A.15.1 [For HCD 1/AC] *Dwelling units shall be considered adaptable when they comply with the appropriate provisions of adaptability contained in Chapter 10 and this chapter.*

1107A.15.2 [For DSA/AC] *Publicly funded dwelling units shall be considered adaptable when they comply with the appropriate provisions of adaptability contained in Chapters 10, 11B and this chapter.*

SECTION 1108A [FOR SFM & DSA/AC] – EGRESS AND AREAS OF REFUGE

1108A.1 [For SFM & DSA/AC] Means of Egress.

1108A.1.1 [For SFM & DSA/AC] General. *All required accessible spaces shall be provided with not less than one accessible means of egress. When more than one exit is required from any accessible space, each accessible portion of the space shall be served by not less than two accessible means of egress. The maximum travel distance from any accessible space to an area of refuge shall not exceed the travel distance set forth in Chapter 10. Each accessible means of egress shall be continuous from each required accessible occupied area to a public way and shall include accessible routes, ramps, exit stairs, elevators, horizontal exits or smoke barriers.*

> ***EXCEPTIONS:***
> ***1.*** *Areas for evacuation assistance are not required in buildings or facilities having a supervised automatic sprinkler system.*
>
> ***2.*** *Areas for evacuation assistance are not required in alterations of existing buildings.*
>
> ***NOTE:*** *This section is also adopted by the Division of the State Architect, Access Compliance, for buildings not regulated by the State Fire Marshal.*

1108A.2 [For SFM & DSA/AC] Emergency Warning Systems/ Accessibility Requirements*. Emergency warning systems as part of the fire-alarm system shall be designed and installed in accordance with NFPA 72 as amended in Chapter 35.*

SECTION 1109A [FOR HCD 1/AC & DSA/AC] -- FACILITY ACCESSIBILITY

1109A.1 [For HCD 1/AC & DSA/AC] General. *When buildings are required to be accessible, building facilities shall be accessible as provided in this section. Where specific floors of a building are required to be accessible, the requirements shall apply only to the facilities located on accessible floors. Doors and openings shall comply with the requirements of Section 1120A.*

> ***EXCEPTION:*** *In covered multifamily dwelling units, except for primary entrances and required exits, doors and openings within units shall provide a minimum of 32 inches (813 mm) nominal clear space, measured between the face of the door and the stop, when the door is in the 90-degree open position to permit the passage of a disabled person in a wheelchair. A 34-inch (864 mm) door is acceptable. The nominal 32-inch (813 mm) clear opening provided by a standard 6-foot (1829 mm) sliding patio door assembly is acceptable. Site access to the primary entry shall be as provided for in this section.*

1109A.2 [For HCD 1/AC & DSA/AC] Bathing and Toilet Facilities.

1109A.2.1 [For HCD 1/AC & DSA/AC] Bathing facilities. *See Tables 1109A.2-1 and 1109A.2- for complying bathrooms.*

1109A.2.2 [For HCD 1/AC & DSA/AC] *Only one bathroom in accessible dwelling units need comply with the requirements for physically disabled persons. See Table 1109A.2-2.*

1109A.2.3 [For HCD 1/AC & DSA/AC] *If a developer desires to provide requirements for physically disabled persons in all bathrooms, use Table 1109A.2-1.*

1109A.2.4 [For HCD 1/AC & DSA/AC] *If a developer desires to provide requirements for physically disabled persons in only one bathroom, use Table 1109A.2-2.*

1109A.2.4.1 [For HCD 1/AC & DSA/AC] *In addition to the requirements listed in Table 1109A.2-2, all bathrooms shall conform to the following general accessibility requirements:*

1. *Title 24, Part 3, California Electrical Code requirements for usable light switches, electrical outlets, thermostats and other environmental controls.*

2. *Minimum 36-inch wide accessible route within each bathroom.*

3. *General door widths and strike side clearance consistent with sections 1109A.1 and 1120A.*

4. *Wall reinforcement for future grab bar installations consistent with Section 1109A.*

1109A.3 [For HCD 1/AC & DSA/AC] Water Closets. *Water closets in bathrooms required to be accessible shall conform to the provisions of this section. The water closet shall be located in a space a minimum of 36 inches (914 mm) in clear width with 48 inches (1219 mm) minimum clear space provided in front of the water closet. This space may include maneuverable space under a lavatory, if provided, arranged so as not to impede access. The minimum height of water closet seats shall be 15 inches (381 mm) above the floor.*

EXCEPTION: *In covered multifamily dwelling units, the water closet may be located in a space 48 inches (1219 mm) in clear width with 36 inches (914 mm) of clear space provided in front of the water closet.*

1109A.3.1 [For HCD 1/AC & DSA/AC] Controls. *Water closet controls for the flush valves shall be mounted on the wide side of toilet areas, no more than 44 inches (1118 mm) above the floor. The force required to activate controls shall be no greater than 5-pound force (lbf)*
(22.2 N).

1109A.4 [For HCD 1/AC & DSA/AC] Lavatories, Mirrors and Towel Fixtures. *At least one accessible lavatory shall be provided within any toilet facility. Where mirrors and towel fixtures are provided at least one of each shall be accessible.*

1109A.4.1 [For HCD 1/AC & DSA/AC] Lavatories. *See Tables 1109A.2-1 and 1109A.2-2.*

1109A.4.2 [For HCD 1/AC & DSA/AC] Plumbing protection. *Hot water and drainpipes accessible under lavatories shall be insulated or otherwise covered. There shall be no sharp or abrasive surfaces under lavatories.*

1109A.4.3 [HCD 1/AC & DSA/AC] Faucet controls. *Faucet controls and operation mechanisms shall be operable with one hand and shall not require tight grasping, pinching or twisting of the wrist.*

The force required to activate controls shall be no greater than 5 pound force (lbf) (22.2 N). Lever operated, push-type and electronically controlled mechanisms are examples of acceptable designs. Self-closing valves are allowed if the faucet remains open for at least 10 seconds.

1109A.5 [For HCD 1/AC & DSA/AC] Fixtures in Adaptable Dwelling Units. *Grab bars need not be installed in either a bathing or toilet facility within an adaptable dwelling unit provided all structural reinforcements for future grab bar installation are provided in the appropriate locations in the adjoining walls. The reinforcement shall be of sufficient length to permit the installation of grab bars as specified. The reinforced wall shall be capable of supporting a load of at least 250 pounds (1112 N).*

1109A.6 [For HCD 1/AC & DSA/AC] Toilet. *Where the toilet is not placed adjacent to a sidewall, the bathroom shall have provisions for installation of floor-mounted, foldaway or similar alternative grab bars. Where the powder room (a room with a toilet and sink) is the only toilet facility located on an accessible level of a multistory dwelling unit, it shall comply with the requirement for reinforced walls for grab bars.*

Where the toilet is placed adjacent to a sidewall, reinforcement shall be installed on both sides or one side and the back. If reinforcement is installed at the back it shall be installed between 32 inches (813 mm) and 38 inches (965 mm) above the floor. The grab bar reinforcement shall be a minimum of 6 inches (152 mm) nominal in height. The backing shall be a minimum of 40 inches (1016 mm) in length.

Reinforcement installed at the side of the toilet shall be installed 32 inches to 38 inches (813 mm to 965 mm) above the floor. The reinforcement shall be installed a maximum of 12 inches (305 mm) from the rear wall and shall extend a minimum of 26 inches (660 mm) in front of the water closet stool. The grab bar reinforcement shall be a minimum of 6 inches (152 mm) nominal in height.

1109A.7 [For HCD 1/AC & DSA/AC] Bathtub. *A bathtub may be installed without surrounding walls provided reinforced areas are provided for installation of floor-mounted grab bars.*

Where a tub is installed with surrounding walls, grab bar reinforcement shall be installed on each end of the bathtub, 32 inches to 38 inches (813mmto 965 mm) above the floor, extending a minimum of 24 inches (610 mm) aligned with the front edge of the bathtub toward the back wall of the bathtub.

The grab bar reinforcement shall be a minimum of 6 inches (152 mm) nominal in height. Grab bar reinforcement shall be installed on the back wall of the bathtub commencing a maximum of 6 inches (152 mm) above the bathtub rim and extending upward to a point a minimum of 38 inches (965 mm) above the floor. The grab bar backing shall be installed horizontally a length to permit the installation of a 48-inch (1219 mm) grab bar with each end a maximum of 6 inches (152 mm) from the end walls of the bathtub. The grab bar reinforcement shall be a minimum of 6 inches (152 mm) nominal in height.

1109A.8 [For HCD 1/AC & DSA/AC] Shower Stalls. *Glass walled shower stalls shall provide reinforcement for installation of floor-mounted grab bars. Reinforcement for installation of ceiling-mounted grab bars is permitted.*

Grab bar reinforcement shall be installed continuous in the walls of adaptable showers 32 inches to 38 inches (813 mm to 965 mm) above the floor. The grab bar reinforcement shall be a minimum of 6 inches (152 mm) nominal in height.

TABLE 1109A.2-1
Use this table when all bathrooms are complying bathrooms.

1. Bathroom entrance doorways shall have an 18-inch (457 mm) clear space to the side of the strike edge of the door on the swing side of the door.
2. Sufficient maneuvering space shall be provided for a person using a wheelchair or other mobility aid to enter and close the door, use the fixtures, reopen the door and exit. Doors may swing into the clear space at any fixture if the maneuvering space is provided. Maneuvering spaces may include any knee space or toe space available below bathroom fixtures.
3. Where the door swings into the bathroom, there shall be a clear space [approximately 30 inches by 48 inches (762 mm by 1219 mm)] within the room to position a wheelchair or other mobility aid clear of the path of the door as it is closed and to permit use of fixtures.
4. There shall be a minimum clear space 48 inches parallel by 30 inches perpendicular (1219 mm by 762 mm) to the side of bathtub or bathtub-shower combination (measured from the foot of the bathtub) to provide for the maneuvering of a wheelchair and transfer to and from the bathing facilities, which may include the maneuverable area under the lavatory. ***EXCEPTION:*** *Prior to July 1, 1994, condominium dwelling units may provide a minimum clear space 30 inches parallel by 48 inches perpendicular (762 mm by 1219 mm) to the side of a bathtub or bathtub-shower combination.*
4.1. A shower spray unit is not required in bathtubs.
5. When a shower stall is provided in an accessible dwelling unit, at least one shower stall shall measure at least 42 inches wide by 48 inches (1067 mm by 1219 mm) deep with an entrance opening of at least 36 inches (914 mm). When a threshold (a recessed drop) is used, it shall be a maximum of ½ inch (12.7 mm) in height and have a beveled or sloped angle not exceeding 45 degrees from the horizontal. Maximum slope of the shower floor shall be 1/2 inch (12.7 mm) per foot in any direction and shall slope toward the rear to a drain located within 6 inches (152 mm) of the rear wall. The floor surfaces shall be of Carborundum or grit-faced tile or of material providing equivalent slip resistance.
5.1 Doors and panels of shower and bathtub enclosures shall be substantially constructed from approved, shatter-resistant materials. Hinged shower doors shall open outward. Glazing used in doors and panels of shower and bathtub enclosures shall be fully tempered, laminated safety glass or approved plastic. When glass is used, it shall have minimum thickness of not less than 1/8 inch (3 mm) when fully tempered, or 1/4 inch (6 mm) when laminated, and shall pass the test requirement of this part, Chapter 24 Glass and Glazing. Plastics used in doors and panels of showers and bathtub enclosures shall be of a shatter-resistant type.
6. Walls must be reinforced to support grab bars as required by Section 1109A.5.
7. Space requirements for the installation of water closets shall be as specified in Section 1109A.3.
8. Structural reinforcements for future grab bar installation shall be as specified in Section 1109A.5.
9. Vanities and lavatories shall be installed with the centerline of the fixture a minimum of 18 inches (457 mm) horizontally from an adjoining wall or fixture. The top of the fixture rim shall be a maximum of 34 inches (864 mm) above the finished floor. Cabinets under lavatories are acceptable provided the bathroom has space to allow a parallel approach by a person in a wheelchair and the lavatory cabinets are designed with adaptable knee space. Knee space shall be provided as follows: *1. The knee space shall be at least 30 inches (762 mm) wide and 8 inches deep (203 mm).* *2. The knee space shall be at least 29 inches (737 mm) high at the front face and reducing to not less than 27 inches (686 mm) at a point 8 inches (203 mm) back from the front edge.* *3. The knee space required in this section shall be provided by one of the following:* *A. The space beneath the lavatory is left clear and unobstructed.* *B. Any cabinet beneath the lavatory is removable without the use of specialized knowledge or specialized tools or,* *C. Doors to the cabinet beneath the lavatory are removable or openable to provide the required unobstructed knee space.* *Toe space shall be provided as follows:* *1. Shall be at least 30 inches (762 mm) wide and centered on the lavatory.* *2. Shall be at least 17 inches (432 mm) deep, measured from the front edge.* *3. Shall be at least 9 inches (229 mm) high from the floor.* *In each such case, the finish floor beneath the lavatory shall be extended to the back of the wall.*

TABLE 1109A.2-2

Use this table when only one complying bathroom is provided. If Table 119A.2-2 is used, all other bathrooms and powder rooms within the dwelling unit shall be on an accessible route with usable entry doors.

1.	*Bathroom entrance doorways shall have an 18-inch (457 mm) clear space to the side of the strike edge of the door on the swing side of the door.*
2.	*Sufficient maneuvering space shall be provided for a person using a wheelchair or other mobility aid to enter and close the door, use the fixtures, reopen the door and exit. Doors may swing into the clear space at any fixture if the maneuvering space is provided. Maneuvering spaces may include any knee space or toe space available below bathroom fixtures.*
3.	*Where the door swings into the bathroom, there shall be a clear space [approximately 30 inches by 48 inches (762 mm by 1219 mm)] within the room to position a wheelchair or other mobility aid clear of the path of the door as it is closed and to permit use of fixtures.*
4.	*Where the door swings out, a clear space is provided within the bathroom for a person using a wheelchair or other mobility aid to position the wheelchair such that the person is allowed use of fixtures. There also shall be clear space to allow persons using wheelchairs to reopen the door to exit.*
5.	*There shall be a minimum clear space 48 inches parallel by 30 inches perpendicular (1219 mm by 762 mm) to the side of a bathtub or bathtub shower combination (measured from the foot of the bathtub) to provide for the maneuvering of a wheelchair and transfer to and from the bathing facilities, which may include the maneuverable area under the lavatory.*
5.1.	*A shower spray unit is not required in bathtubs.*
6.	*When a shower stall is provided in an accessible dwelling unit, at least one shower stall shall measure at least 42 inches wide by 48 inches deep (1067 mm by 1219 mm) with an entrance opening of at least 36 inches (914 mm). When a threshold (a recessed drop) is used, it shall be a maximum of 1/2 inch (12.7 mm) in height and have a beveled or sloped angle not exceeding 45 percent from the horizontal. Maximum slope of the shower floor shall be 1/2 inch (12.7 mm) per foot in any direction and shall slope toward the rear to a drain located within 6 inches (152 mm) of the rear wall. The floor surfaces shall be of Carborundum or grit-faced tile or of material providing equivalent slip resistance.*
6.1	*Doors and panels of shower and bathtub enclosures shall be substantially constructed from approved, shatter-resistant materials. Hinged shower doors shall open outward. Glazing used in doors and panels of shower and bathtub enclosures shall be fully tempered, laminated safety glass or approved plastic. When glass is used, it shall have minimum thickness of not less than 1/8 inch (3 mm) when fully tempered, or 1/4 inch (6 mm) when laminated, and shall pass the test requirements of this part, Chapter 24 Glass and Glazing. Plastics used in doors and panels of showers and bathtub enclosures shall be of a shatter-resistant type.*
7.	*Walls must be reinforced to support grab bars as required by Section 1109A.5.*
8.	*Space requirements for the installation of water closets shall be as specified in Section 1109A.3.*
9.	*Structural reinforcements for future grab bar installation shall be as specified in Section 1109A.5.*
10.	*When both tub and shower fixtures are provided in the bathroom, at least one shall be made accessible. When two or more lavatories in a bathroom are provided, at least one shall be made accessible.*
11.	*Toilets shall be located within bathrooms in a manner that permits a grab bar to be installed on one side of the fixture. In locations where toilets are adjacent to walls or bathtubs, the center line of the fixture shall be a minimum of 18 inches (457 mm) from the obstacle. The other (nongrab bar) side of the toilet fixture shall be a minimum of 18 inches (457 mm) from the finished surface of adjoining walls, vanities or from the edge of a lavatory.*
12.	*Vanities and lavatories shall be installed with the centerline of the fixture a minimum of 18 inches (457 mm) horizontally from an adjoining wall or fixture. The top of the fixture rim shall be a maximum of 34 inches (864 mm) above the finished floor. Cabinets under lavatories are acceptable provided the bathroom has space to allow a parallel approach by a person in a wheelchair and the lavatory cabinets are designed with adaptable knee space. Knee space shall be provided as follows:* *1. The knee space shall be at least 30 inches (762 mm) wide and 8 inches deep (203 mm).* *2. The knee space shall be at least 29 inches (737 mm) high at the front face and reducing to not less than 27 inches (686 mm) at a point 8 inches (203 mm) back from the front edge.* *3. The knee space required in this section shall be provided by one of the following:* *A. The space beneath the lavatory is left clear and unobstructed.* *B. Any cabinet beneath the lavatory is removable without the use of specialized knowledge or specialized tools or,* *C. Doors to the cabinet beneath the lavatory are removable or openable to provide the required unobstructed knee space.* *Toe space shall be provided as follows:* *1. Shall be at least 30 inches (762 mm) wide and centered on the lavatory.* *2. Shall be at least 17 inches (432 mm) deep, measured from the front edge.* *3 Shall be at least 9 inches (229 mm) high from the floor.* *In each such case, the finish floor beneath the lavatory shall be extended to the back of the wall.*

SECTION 1110A [FOR HCD 1/AC & DSA/AC] – ELEVATORS AND SPECIAL ACCESS (WHEELCHAIR) LIFTS

1110A.1 [For HCD 1/AC & DSA/AC] Elevators. *Elevators provided in covered multifamily buildings shall be accessible and comply with Chapter 11A, and Title 24, Part 7, of the California Code of Regulations.*

> ***EXCEPTION:*** *Private elevators serving only one dwelling unit.*

1110A.1.1 [For HCD 1/AC & DSA/AC] General.

1110A.1.2 [For HCD 1/AC & DSA/AC] Size of cab and control locations and requirements for accommodation of people with disabilities. *In covered multifamily buildings two or more stories in height served by an elevator, or a building served by an elevator required by Chapter 11A or 11B, or a building served by an elevator required for accessibility by Chapter 1 and Sections 101.17.9 and 101.17.11 all elevators provided shall accommodate a wheelchair.*

> ***EXCEPTION:*** *When the enforcing agency determines that compliance with any regulation under this section would create an unreasonable hardship, an exception to such regulation shall be granted when equivalent facilitation is provided, and where it can be demonstrated that a person using a wheelchair can enter and operate the elevator.*

1110A.1.3 [For HCD 1/AC & DSA/AC] Operation and leveling. *The elevator shall be automatic and be provided with a self-leveling feature that will automatically bring the car to the floor landings within a tolerance of plus or minus ½ inch (12.7 mm) under normal loading and unloading conditions. This self-leveling shall, within its zone, be entirely automatic and independent of the operating device and shall correct the overtravel or undertravel. The car shall also be maintained approximately level with the landing, irrespective of load.*

The clearance between the car platform sill and the edge of the hoistway landing shall be no greater than 1 and ¼ inch (32 mm).

1110A.1.4 [For HCD 1/AC & DSA/AC] Door protective and reopening devices. *Doors closed by automatic means shall be provided with a door-reopening device that will function to stop and reopen a car door and adjacent hoistway door in case the car door is obstructed while closing.*

This reopening device shall also be capable of sensing an object or person in the path of a closing door without requiring contact for activation at a nominal 5 inches and 29 inches (127 mm and 737 mm) above the floor.

Door-reopening devices shall remain effective for a period of not less than 20 seconds.

After such an interval, the doors may close in accordance with the requirements of ANSI 17.1-86, the American Society of Mechanical Engineers (ASME) document ASME 17.1-1990.

1110A.1.5 [For HCD 1/AC & DSA/AC] Hall call. *The minimum acceptable time from notification that a car is answering a call (lantern and audible signal) until the doors of the car start to close shall be calculated by the following equation:*

T = D / (1.5 ft/s) or T = D / (445 mm/s)

*Where T is the total time in seconds and D is the distance from a point in the lobby or landing area 60 inches (1524 mm) directly in front of the farthest call button controlling that car to the centerline of its hoistway door (see Figure *****11A-C). For cars with in-car lanterns, T begins when the lantern is visible from the vicinity of hall call buttons and an audible signal is sounded.*

1110A.1.6 [For HCD 1/AC & DSA/AC] Car call. *The minimum acceptable time for doors to remain fully open shall not be less than five seconds.*

***** In 1110A.1.5 (Hall call) in the 2nd paragraph the cross-reference to Figures 11A-C is incorrect, the correct cross-reference are Figures 11A A-C. This will be submitted for correction in Rulemaking.

1110A.1.7 [For HCD 1/AC & DSA/AC] Car inside. *The car inside shall allow for the turning of a wheelchair. The minimum clear distance between walls or between wall and door, excluding return panels, shall not be less than 80 inches by 54 inches (2032 mm by 1372 mm) for center-opening doors, and 68 inches by 54 inches (1727 mm by 1372 mm) for side-slide opening doors. See Figure 11A-A. Minimum distance from wall to return panel shall not be less than 51 inches (1295 mm).*

*Elevator floor buttons shall be within 4 feet 6 inches (1372 mm) above the finish floor for side approach and 48 inches (1219 mm) for front approach. Except for photoelectric tube bypass switches, emergency controls, including the emergency stop and alarm, shall be grouped in or adjacent to the bottom of the panel and shall be no lower than 2 feet 11 inches (889 mm) from the floor. For multiple controls only, one set must comply with these height requirements. Floor buttons shall be provided with visual indicators to show when each call is registered. The visual indicators shall be extinguished when each call is answered. The emergency telephone handset shall be positioned no higher than 4 feet (1219 mm) above the floor, and the handset cord shall be a minimum of 2 feet 5 inches (737 mm) in length. If the telephone system is located in a closed compartment, the compartment door hardware shall be lever type conforming to the provisions of Section *****1004.3, type of lock or latch. Emergency intercommunication shall not require voice communication.*

NOTE: *Where possible, a 48-inch (1219 mm) maximum height for elevator floor buttons is preferred.*

1110A.1.8 [For HCD1/AC & DSA/AC] Car controls. *Identification for the visually impaired shall be as follows:*

Passenger elevator car controls shall have a minimum dimension of ¾-inch (19.1 mm) and shall be raised 1/8-inch (3.2 mm) plus or minus 1/32-inch (0.8 mm) above the surrounding surface.

Control buttons shall be illuminated, shall have square shoulders and shall be activated by a mechanical motion that is detectable.

All control buttons shall be designated by a 5/8-inch-minimum (15.9 mm), Arabic numeral, standard alphabet character, or standard symbol immediately to the left of the control button. A Braille symbol shall be located immediately below the numeral, character or symbol. A minimum clear space of 3/8-inch (9.5mm) or other suitable means of separation shall be provided between rows of control buttons.

NOTE: *See Figure 11A-B.*

The raised characters shall be white on a black background. Controls and emergency equipment identified by raised symbols shall include, but not be limited to, door open, door close, alarm bell, emergency stop and telephone. The call button for the main entry floor shall be designated by a raised star at the left of the floor designation.

1110A.1.9 [For HCD 1/AC & DSA/AC] Car position indicator and signal. *Call operation buttons shall be within 3 feet 6 inches (1067 mm) of the floor. Buttons shall be a minimum of ¾ -inch (19.1 mm) in size and shall be raised 1/8-inch (3.2 mm) plus or minus 1/32-inch (0.8mm) above the surrounding surface. Visual indication shall be provided to show each call registered and extinguished when answered. Objects adjacent to, and below, hall call buttons shall not project more than 4 inches (102 mm) from the wall.*

1110A.1.10 [For HCD 1/AC] Minimum illumination. *The minimum illumination at the car controls threshold and the landing when the car and landing doors are open shall not be less than 5 foot-candles (54 lx).*

1110A.1.11 [For HCD 1/AC] Hall lantern. *A visual and audible signal shall be provided at each hoistway entrance indicating to the prospective passenger the car answering the call and its direction of travel as follows:*

The visual signal for each direction shall be a minimum of 2-½ inches (64mm) high by 2-½ inches (64 mm) high by 2-½ inches (64 mm) wide, and visible from the proximity of the hall call button.

* In 1110A.1.7 (Car inside) in the 2nd paragraph the reference to Section 1004.3 is incorrect. Reference should read 1003.3.1.8. This will be submitted for correction in Rulemaking.

The audible signal shall sound once for the up direction and twice for the down direction or of a configuration that distinguishes between up and down elevator travel.

The center line of the fixture shall be located a minimum of 6 feet (1829 mm) in height from the lobby floor.

The use of in-car lanterns, located in or on the car doorjambs, visible from the proximity of the hall call buttons and conforming to the above requirements shall or will be acceptable.

The use of arrow shapes are preferred for visible signals.

1110A.1.12 [For HCD 1/AC] Doorjamb marking. *Passenger elevator landing jambs on all elevator floors shall have the number of the floor on that the jamb is located designated by raised Arabic numerals which are a minimum of 2 inches (51 mm) in height and raised Braille symbols that conform to Section *****1117B.5.2 located approximately 5 feet (1524 mm) above the floor on the jamb panels on both sides of the door so that they are visible from within the elevator. Raised Braille symbols shall be placed directly to the left of the corresponding raised Arabic numerals. The raised characters shall be on a contrasting background. See Figure 11A-B.*

1110A.1.13 [For HCD 1/AC] Location. *Passenger elevators shall be located near a major path of travel and provisions shall be made to ensure that they remain accessible and usable at all times the building is occupied.*

1110A.2 [For HCD 1/AC & DSA/AC] Special Access (Wheelchair) Lifts. *Special access wheelchair lifts may be provided between levels, in lieu of passenger elevators, when the vertical distance between landings, as well as the structural design and safeguards are as allowed by the State of California, the Department of Industrial Relations, Division of Occupational Safety and Health, and any applicable safety regulations of other administrative authorities having jurisdiction.*

If lifts are provided, they shall be designed and constructed to facilitate unassisted entry, operation, and exit from the lift, and shall comply with restrictions and enhancements of this section in conjunction with Section 3093 to 3094.5, Part 7 of the California Code of Regulations.

SECTION 1111A [FOR HCD 1/AC & DSA/AC] – TELEPHONES

1111A.1 [For HCD 1/AC & DSA/AC] General. *If public telephones are provided, they shall comply with this section. On floors where public telephones are provided, at least one telephone shall be accessible. On any floor where two or more banks of multiple telephones are provided, at least one telephone in each bank shall be accessible.*

1111A.2 [For HCD 1/AC & DSA/AC] Clear Floor Ground Space. *A clear floor or ground space at least 30 inches by 48 inches (762 mm by 1219 mm) that allows either a forward or parallel approach by a person using a wheelchair shall be provided at telephones.*

1111A.3 [For HCD 1/AC & DSA/AC] Size and Approach. *The minimum clear floor ground space required to accommodate a single, stationary wheelchair and occupant is 30 inches by 48 inches (762 mm by 1219 mm). The minimum clear floor or ground space for wheelchairs may be positioned for forward or parallel approach to an object. Clear floor or ground space for wheelchairs may be part of the knee space required under some objects.*

1111A.4 [For HCD 1/AC & DSA/AC] Relationship of Maneuvering Clearances to Wheelchair Spaces. *One full unobstructed side of the clear floor or ground space for a wheelchair shall adjoin another wheelchair clear floor space. If a clear floor space is located in an alcove or otherwise confined on all or part of three sides, additional maneuvering clearances shall be provided.*

1111A.5 [For HCD 1/AC & DSA/AC] Floor Surfaces of Wheelchair Spaces. *Floor surfaces of wheelchair spaces shall conform to the figures in Chapter 11B. Bases, enclosures and fixed seats shall not impede approaches to telephones by people who use wheelchairs.*

***** In 1110A.1.12 (Doorjamb marking) the cross-reference to Section 1117B.5.2 is incorrect. Section references should read Sections 1117B.5.5 and 1117B.5.6. This will be submitted for correction in Rulemaking.

1111A.6 [For HCD 1/AC & DSA/AC] Mounting Height. *The highest operable part of the telephone shall be within the reach ranges specified in the figures in Chapter 11B. Telephones mounted diagonally in a corner that require wheelchair users to reach diagonally shall have the highest operable part no higher than 54 inches (1372 mm) above the floor.*

1111A.7 [For HCD 1/AC & DSA/AC] Enclosures. *If telephone enclosures are provided, they may overhang the clear floor space required in Sections 1111A.2, 1111A.3 and 1111A.4 with the following limits:*

1111A.7.1 [For HCD 1/AC & DSA/AC] Side reach possible. *The overhang shall be no greater than 19 inches (483 mm). The height of the lowest overhanging part shall be equal to or greater than 27 inches (686 mm).*

1111A.7.2 [For HCD 1/AC & DSA/AC] Full-height enclosures. *Entrances to full-height enclosures shall be 30 inches (762 mm) minimum.*

1111A.7.3 [For HCD 1/AC & DSA/AC] Forward reach required. *If the overhang is greater than 12 inches (305 mm), then the clear width of the enclosure shall be 30 inches (762 mm) mini-mum; if the clear width of the enclosure is less than 30 inches (762 mm), then the height of the lowest overhanging part shall be equal to or greater than 27 inches (686 mm).*

1111A.8 [For HCD 1/AC & DSA/AC] Equipment for Hearing Impaired People. *Telephones shall be equipped with a receiver that generates a magnetic field in the area of the receiver cap. A reasonable number of the public telephones provided, but always at least one on each floor or in each bank, whichever is more, in a building or facility, shall be equipped with a volume control. Such telephones shall be capable of a minimum of 12 dbA and a maximum of 18 dbA above normal. If an automatic reset is provided, 18 dbA may be exceeded. Public telephones with volume control shall be hearing aid compatible and shall be identified by a sign containing a depiction of a telephone handset with radiating sound waves.*

1111A.9 [For HCD 1/AC & DSA/AC] Text Telephones. *If a total of four or more public pay telephones are provided at the interior and exterior of a site, and if at least one of the total is in an interior location, then at least one interior public text telephone shall be provided.*

1111A.10 [For HCD 1/AC & DSA/AC] Controls. *Telephones shall have push-button controls where service for such equipment is available.*

1111A.11 [For HCD 1/AC & DSA/AC] Cord Length. *The cord from the telephone to the handset shall be at least 29 inches (737 mm) long.*

1111A.12 [For HCD 1/AC & DSA/AC] Telephone Books. *If telephone books are provided, they shall be located in a position that complies with the reach ranges in the figures in Chapter 11B.*

SECTION 1112A [FOR HCD 1/AC & DSA/AC] – KITCHENS

1112A.1 [For HCD 1/AC & DSA/AC] General. *Kitchens within adaptable dwelling units shall be accessible.*

1112A.2 [For HCD1/AC & DSA/AC] Clear Floor Space. *Kitchens in covered multifamily dwelling units that are required to provide access to persons with physical disabilities shall have a clear floor space at least 30 inches by 48 inches (762 mm by 1219 mm) that allows a parallel approach by a person in a wheelchair at the range or cook top and either a parallel or forward approach at the oven, dishwasher, refrigerator/freezer and trash compactor.*

> ***EXCEPTION:*** *In covered multifamily dwelling units containing U shaped kitchens with a range or cook top at the base of the U, a 60-inch (1524 mm) clear width between cabinet fronts, appliances or fixtures shall be provided to allow a parallel approach, or base cabinets shall be removable at that location to a height of 27 inches (686 mm) above the floor to allow knee space for a forward approach. Base cabinets directly under kitchen sink counter area, including toeboard and shelving, shall be removable, without the use of special tools or knowledge, to provide clearance for a wheelchair. Finished flooring shall be installed on the floor beneath such countertop. A minimum clear space of 48 inches (1219 mm) shall be provided for all other kitchen designs.*

1112A.3 [For HCD 1/AC & DSA/AC] Kitchen Sink Faucet Controls. *Faucet controls and operating mechanism shall be operable with one hand and shall not require tight grasping, pinching or twisting of the wrist. The force required to activate controls shall be no greater than 5 pound force (lbf) (22.2 N).*
Lever-operated, push-type and electronically controlled mechanisms are examples of acceptable designs. Self-closing valves are allowed if the faucet remains open for at least 10 seconds.

1112A.4 [For HCD 1/AC & DSA/AC] Countertops. *A minimum linear length of 30 inches (762 mm) of countertop shall be provided for the kitchen sink, and a minimum linear length of 30 inches (762 mm) of countertop shall be provided for a work surface, both of which shall be designed to enable repositioning to a minimum height of 28 inches (711 mm). The sink and work surface may be a single integral unit, or be separate components. The base cabinets directly under sink and work surface counter areas which are designed for repositioning shall be removable to provide clearance for a wheelchair.*

> ***EXCEPTIONS:***
> ***1.*** *Only 5 percent of the covered multifamily apartment house dwelling units that are required to be accessible are required to comply with the requirements for repositionable countertops. All other covered multifamily dwelling units are exempt.*
>
> ***2.*** *Stone, cultured stone and tiled countertops may be used without meeting the repositioning requirements.*
>
> ***3.*** *In covered multifamily apartment house dwelling units, two 15-inch (381 mm) minimum width breadboards may be provided in lieu of the required 30 inches (762 mm) of countertop work surface.*

The sides and back of adjacent cabinets, which may become exposed to moisture or food handling when a countertop is lowered, shall be constructed of durable, nonabsorbent materials appropriate for such uses. Finished flooring shall be installed on the floor beneath such countertop.

1112A.5 [For HCD 1/AC & DSA/AC] Lower Shelving. *Lower shelving and/or drawer space shall be provided in the kitchen at a height of no more than 48 inches (1219 mm).*

1112A.6 [For HCD 1/AC & DSA/AC] Base Cabinets. *In covered multifamily dwelling units required to be accessible, base cabinets directly under kitchen sink counter area, including toeboard and shelving, shall be removable without the use of specialized tools or specialized knowledge to provide clearance for a wheelchair. Finished flooring shall be provided on the floor beneath the countertop.*

SECTION 1113A [FOR HCD 1/AC & DSA/AC] – SWIMMING POOLS/DRINKING FOUNTAINS

1113A.1 [For HCD 1/AC & DSA/AC] Swimming Pools. *Swimming pools required to be accessible to persons with physical disabilities shall comply with the provisions of Chapters 11B and 31B.*

1113A.2 [For HCD 1/AC] Drinking Fountains.

1113A.2.1 Accessible route. *If provided in covered multifamily buildings, drinking fountains and water coolers shall be on an accessible route. Wall-mounted and post-mounted cantilevered drinking fountains and water coolers shall have a clear knee space a minimum of 30 inches (762 mm) in width and shall also have a minimum clear floor space 30 inches by 48 inches (762mm by 1219 mm) to allow a person in a wheelchair to approach the unit facing forward.*

1113A.2.2 Water flow. *The spout shall provide a flow of water at least 4 inches (102 mm) high so as to allow the insertion of a cup or glass under the flow of water. The force required to activate controls shall be no greater than 5 pound force (lbf) (22.2 N).*

SECTION 1114A [FOR HCD 1/AC & DSA/AC] – SIGNS

1114A.1 [For HCD 1/AC & DSA/AC] General. *All accessible toilet and bathing facilities shall be identified by the international symbol of accessibility. Signs need not be provided for facilities within an adaptable covered multifamily dwelling unit, or within an accessible patient or guest room.*

SECTION 1115A [FOR HCD 1/AC & DSA/AC] – LAUNDRY ROOMS

1115A.1 [For HCD 1/AC & DSA/AC] General. *If clothes-washing machines and clothes dryers are provided in covered multifamily buildings or dwelling units, at least one of each type of appliance shall be provided in each laundry area. Laundry rooms serving covered multifamily dwellings are not required to have front-loading clothes washers. Where front-loading clothes washers are not provided, management shall provide assistive devices, on request, if necessary to permit a resident to use a top-loading clothes washer.*

SECTION 1116A [FOR HCD 1/AC & DSA/AC] – FLOORING

1116A.1 [For HCD 1/AC & DSA/AC] General. *If carpet or carpet tile is used in a common-use area or public-use area on a ground or floor surface, it shall have firm backing or no backing. The maximum pile height shall be ½ inch (12.7 mm). Exposed edges of carpet shall be fastened to floor surfaces and have trim along the entire length of the exposed edge. Carpet edge trim shall comply with the requirements for changes in level.*

SECTION 1117A [FOR HCD 1/AC & DSA/AC] – EXTERIOR ROUTES OF TRAVEL

1117A.1 [For HCD 1/AC & DSA/AC] General. *When more than one building or facility is located on a site, accessible routes of travel shall be provided between buildings and accessible site facilities. The accessible route of travel shall be the most practical direct route between accessible building entrances, accessible site facilities and the accessible entrance to the site.*

1117A.2 [For HCD 1/AC & DSA/AC] Design and Construction. *Use the provisions of this chapter and Chapter 10.*

1117A.3 [For HCD 1/AC & DSA/AC] Signs. *At every primary public entrance and at every major junction along or leading to an accessible route of travel, there shall be a sign displaying the International Symbol of Accessibility. Signs shall indicate the direction to accessible building entrances and facilities.*

1117A.4 [For HCD 1/AC & DSA/AC] Curb Ramps.

1117A.4.1 [For HCD 1/AC & DSA/AC] General. *Curb ramps shall be constructed at each corner of street intersections and where a pedestrian way crosses a curb. The preferred and recommended location for curb ramps is in the center of the crosswalk of each street corner. Where it is necessary to locate a curb ramp in the center of the curb return and the street surfaces are marked to identify pedestrian crosswalks, the lower end of the curb ramp shall terminate within such crosswalk areas. Curb ramps do not require handrails.*

1117A.4.2 [For HCD 1/AC & DSA/AC] Width of curb ramps. *Curb ramps shall be a minimum of 4 feet (1219 mm) in width and shall lie, generally, in a single sloped plane, with a minimum of surface warping and cross slope.*

1117A.4.3 [For HCD 1/AC & DSA/AC] Slope of curb ramps. *The slope of curb ramps shall not exceed 1 unit vertical to 12 units horizontal (8.33% slope). Transitions from ramps to walks, gutters or streets shall be flush and free of abrupt changes, except that curb ramps shall comply with Section 1117A.4.5. The slope of the fanned or flared sides of curb ramps shall not exceed 1 unit vertical to 8 units horizontal (12.5% slope). If a curb ramp is located where pedestrians must walk across the ramp, then it shall have flared sides; the maximum slope of the flare shall be 1 unit vertical in 10 units horizontal (10% slope). Curb ramps with returned curbs may be used where pedestrians would not normally walk across the ramp.*

1117A.4.4 [For HCD 1/AC & DSA/AC] Level landing. *A level landing 4 feet (1219 mm) deep shall be provided at the upper end of each curb ramp over its full width to permit safe egress from the ramp surface, or the slope of the fanned or flared sides of the curb ramp shall not exceed 1 unit vertical to 12 units horizontal (8.33% slope).*

1117A.4.5 [For HCD 1/AC & DSA/AC] Beveled lip. *The lower end of each curb ramp shall have a ½-inch (13 mm) lip beveled at 45 degrees.*

1117A.4.6 [For HCD 1/AC & DSA/AC] Finish. *The surface of each curb ramp and its flared sides shall be stable, firm and slipresistant and shall be of contrasting finish from that of the adjacent sidewalk.*

1117A.4.7 [For HCD 1/AC & DSA/AC] Detectable warnings. *A curb ramp shall have a detectable warning that extends the full width and depth of the curb ramp when the ramp slope is less than 1 unit vertical in 15 units horizontal (6.7% slope). Detectable warnings shall consist of raised truncated domes with a diameter of nominal 0.9 inch (22.9 mm), a height of nominal 0.2 inch (5.08 mm) and a center-to-center spacing of nominal 2.35 inches (59.7 mm) and shall contrast visually with adjoining surfaces, either light-on-dark or dark-on-light. Warning surfaces shall be of the color yellow conforming to Federal Color No. 33538, as shown in Table IV of Standard No. 595B.Where the color value contrast between the yellow warning and the main walking surface is less than 70 percent, a 1-inch-wide (25 mm) black strip shall separate the yellow warning from the main walking surface. Contrast shall be determined by:*

Contrast = [(B1-B2/B1 1X 100%) where B1 = light reflectance value (LRV) of the lighter area and B2 = light reflectance value (LRV) of the darker area]. The material used to provide contrast shall be an integral part of the walking surface. The domes may be constructed in a variety of methods, including cast in place or stamped, or they may be part of a prefabricated surface treatment.

Only approved DSA/AC detectable warning products and directional surfaces shall be installed as provided in the CCR, Title 24, Part 1 Articles 2, 3 and 4. Refer to CCR, Title 24, Part 12, Chapter 12-11A and B for building and facilities access specifications for product approval for detectable warning products and directional surfaces.

> ***[For DSA/AC] NOTE:*** *Detectable warning products and directional surfaces installed after January 1, 2001, shall be evaluated by an independent entity, selected by the Department of General Services, Division of the State Architect, Access Compliance, for all occupancies, including transportation and other outdoor environments, except that when products and surfaces are for use in residential housing evaluation shall be in consultation with the Department of Housing and Community Development. See Government Code Section 4460.*

1117A.4.8 [For HCD 1/AC & DSA/AC] Obstructions. *Curb ramps shall be located or protected to prevent their obstruction by parked cars. Built-up curb ramps shall be located so that they do not project into vehicular traffic lanes.*

1117A.4.9 [For HCD 1/AC & DSA/AC] Diagonal curb ramps. *If diagonal (or corner-type) curb ramps have returned curbs or other well-defined edges, such edges shall be parallel to the direction of pedestrian flow. The bottom of diagonal curb ramps shall have 48 inches (1219 mm) minimum clear space as shown in the figures in Chapter 11B. If diagonal curb ramps are provided at marked crossings, the 48-inch (1219 mm) clear space shall be within the markings (see figures in Chapter 11B). If diagonal curb ramps have flared sides, they shall also have at least a 24-inch-long (610 mm) segment of straight curb located on each side of the curb ramp and within the marked crossing (see figures in Chapter 11B).*

SECTION 1118A [FOR HCD 1/AC & DSA/AC] – PARKING FACILITIES

1118A.1 [For HCD 1/AC & DSA/AC] Accessible Parking Required. *Accessible parking spaces shall be located on the shortest possible accessible route of travel to an accessible building entrance. In facilities with multiple accessible building entrances with adjacent parking, accessible parking spaces shall be dispersed and located near the accessible entrances. When practical, the accessible route of travel shall not cross lanes for vehicular traffic. When crossing vehicle traffic lanes is necessary, the route of travel shall be designated and marked as a crosswalk.*

Each lot or parking structure where parking is provided for clients, guests, employees or residents shall provide accessible parking as required by this section. In separate parking structures or lots that do not serve a particular building, parking spaces for physically disabled people shall be located on the shortest possible circulation route to an accessible pedestrian entrance of the parking facility.

If assigned parking is provided at covered multifamily building sites, designated accessible parking at the dwelling unit shall be provided on request of residents with physical disabilities on the same terms and with the full range of choices (e.g., surface parking or garage) provided for other residents, with accessible parking on a route accessible to wheelchairs for at least 2 percent of the covered dwelling units. Signage is not required. When visitor parking is provided, a minimum of 5 percent of the visitor parking shall provide access to grade-level entrances of multifamily dwellings and accessible parking at facilities (e.g., swimming pools) that serve accessible buildings. Visitor parking spaces shall be provided with signage as required by Section 1118A.5.

Such sign shall not be blocked from view by a vehicle parked in the space.

1118A.2 [For HCD 1/AC & DSA/AC] Parking Structures. *All entrances to and vertical clearances within parking structures shall have a minimum vertical clearance of 8 feet 2 inches (2489 mm) where required for accessibility to parking spaces for persons with physical disabilities.*

> ***EXCEPTION:*** *Private garages are exempt from the 8-foot 2-inch (2489 mm) minimum height requirement. Covered parking spaces and parking spaces in common areas shall provide a minimum of 8 feet 2 inches (2489 mm) vertical clearance.*

1118A.2.1 [For HCD 1/AC & DSA/AC] Passenger parking. *Passenger parking spaces shall not be considered to be passenger loading zones.*

1118A.3 [For HCD 1/AC & DSA/AC] Design and Construction. *When accessible parking spaces are required by this section, they shall be designed and constructed in accordance with the California Building Code, Title 24, Part 2, commencing with Section 1118A.*

1118A.4 [For HCD 1/AC & DSA/AC] Parking Space Size. *Parking spaces for persons with physical disabilities shall be located on the shortest possible route to an accessible entrance and shall be sized as follows:*

1118A.4.1 [For HCD 1/AC & DSA/AC] Single parking space size. *Where single spaces are provided, they shall be 14 feet (4267 mm) wide and outlined to provide a 9-foot (2743 mm) parking area and a 5-foot (1524 mm) loading and unloading access aisle on the passenger side of the vehicle. When more than one space is provided in lieu of providing a 14-foot-wide (4267 mm) space for each parking space, two spaces can be provided within a 23-foot-wide (7010 mm) area lined to provide a 9-foot (2743 mm) parking area on each side of a 5-foot (1524 mm) loading and unloading access aisle in the center. The minimum length of each parking space shall be 18 feet (5486 mm). The words NO PARKING shall be painted on the ground within each five-foot (1524 mm) loading and unloading access aisle. This notice shall be painted in white letters no less than 12-inches (154 mm) high and located so that it is visible to traffic enforcement officials. See Figure 11B-18B.*

1118A.4.2 [For HCD 1/AC & DSA/AC] Van parking. *One in every eight accessible spaces, but not less than one, shall be served by an access aisle 8-feet (2438 mm) wide minimum, placed on the side opposite the driver's side when the vehicle is going forward into the parking space and shall be designated van accessible as required by Section 1118A.4.1. All such spaces may be grouped on one level of a parking structure. The words NO PARKING shall be painted on the ground within each eight-foot (2438 mm) loading and unloading access aisle. This notice shall be painted in white letters no less than 12-inches (154 mm) high and located so that it is visible to traffic enforcement officials. See Figure 11B-18B.*

1118A.4.3 [For HCD 1/AC & DSA/AC] Arrangement of parking spaces. *In each parking area, a bumper or curb shall be provided and located to prevent encroachment of cars over the required width of walkways. Also, the space shall be so located that people with physical disabilities are not compelled to wheel or walk behind parked cars other than their own. Pedestrian ways which are accessible to people with physical disabilities shall be provided from each such parking space to related facilities, including curb cuts or ramps as needed. Ramps shall not encroach into any accessible parking space or the adjacent access aisle. The maximum cross slope in any direction of an accessible parking space and adjacent access aisle shall not exceed 2%. See Figures 11B-18A through 11B-18C.*

> ***EXCEPTION:*** *Parking spaces may be provided which would require a person with physical disabilities to wheel or walk behind other than accessible parking spaces when the enforcing agency determines that compliance with these regulations or providing equivalent facilitation would create an unreasonable hardship.*

1118A.4.4 [For HCD 1/AC & DSA/AC] Slope of parking spaces. *Surface slopes of accessible parking spaces shall be the minimum possible and shall not exceed ¼ inch (6 mm) per foot (2.083% gradient) in any direction.*

1118A.5 [For HCD 1/AC & DSA/AC] Signs. *Every parking space required by this section shall be identified by a sign, centered between 3 feet (914 mm) and 5 feet (1524 mm) above the parking surface, at the head of the parking space. The sign shall include the International Symbol of Accessibility and state RESERVED, or equivalent language.*

> ***NOTE:*** *For parking spaces at covered multifamily buildings, use Section 1118A.1.*

An additional sign shall also be posted in a conspicuous place at each entrance to off-street parking facilities or immediately adjacent to and visible from each stall or space. The sign shall not be less than 17 inches (432 mm) by 22 inches (559 mm) in size with lettering not less than 1 inch (25 mm) in height, which clearly and conspicuously states the following: Unauthorized vehicles parked in designated handicapped spaces not displaying distinguishing placards or license plates issued for physically disabled persons may be towed away at owner's expense. Towed vehicles may be reclaimed at ____ _____ or by telephoning _____.

In addition to the above requirements, the surface of each accessible parking space or stall shall have a surface identification duplicating either of the following schemes:

1. [For HCD 1/AC & DSA/AC] *By outlining or painting the stall or space in blue and outlining on the ground in the stall or space in white or suitable contrasting color a profile view depicting a wheelchair with occupant; or,*

2. [For HCD1/AC & DSA/AC] *By outlining a profile view of a wheelchair with occupant in white on blue background. The profile view shall be located so that it is visible to a traffic enforcement officer when a vehicle is properly parked in the space and shall be 36 inches high by 36 inches wide (914 mm by 914 mm).*

NOTE: *See figures in Chapter 11B.*

SECTION 1119A [FOR HCD 1/AC & DSA/AC] – REQUIREMENTS FOR ACCESSIBLE ROUTES IN COVERED BUILDINGS WITHOUT AN ELEVATOR

(Provisions below do not apply to multiple-story dwelling units in nonelevator buildings, i.e., townhouses.)

IF SINGLE BUILDING WITH COMMON (LOBBY) ENTRANCE Use only the following steps for determining required access to adaptable units:
1. All ground-floor units in nonelevator buildings must be adaptable and on an accessible route to comply with the requirements unless an accessible route is not required as determined by Test No. 1, Individual Building Test, or Test No. 3, Unusual Characteristics Test as described below. Twenty percent of the ground-floor dwelling units that are not required to have an accessible route shall be adaptable. The remaining ground-floor dwelling units must comply with the features listed in Section 1119A.2 unless exempted by Test No. 3, Unusual Characteristics Test.
2. You may use Individual Building Test No. 1 only if site has terrain over 15 percent slope.
3. You may use Unusual Characteristics Test No. 3 if applicable. See the test.
ALL OTHER SITES, INCLUDING SINGLE BUILDING WITH MULTIPLE ENTRANCES Use only the following steps for determining required access to adaptable units:
1. All ground-floor units in nonelevator buildings must be adaptable and on an accessible route to comply with the requirements unless an accessible route is not required as determined by Test No. 1, Individual Building Test, or Test No. 2, Site Analysis Test, or Test No. 3, Unusual Characteristics Test as described below. A minimum of 20 percent of the ground- floor dwelling units are required to have an accessible route and shall be adaptable. The remaining ground-floor dwelling units must comply with the features listed in Section 1119A.2 unless exempted by Test No. 3, Unusual Characteristics Test.
2. Use Individual Building Test No. 1 only if site has terrain over 15 percent slope.
3. Use Site Analysis Test No. 2 only if site has terrain over 10 percent slope.
4. Use Unusual Characteristics Test No. 3 if applicable. See the test.

Provisions to Test Nos. 1 and 2. *Where a building elevator is provided only as means of creating an accessible route to covered multifamily dwelling units on a ground floor, the building is not considered to be an elevator building for purposes of this code; hence, only the ground-floor dwelling units would be covered.*

TEST NO. 1 – INDIVIDUAL BUILDING TEST

It is not required by this code to provide an accessible route when the terrain of the site is such that both of the following apply:

1. The slopes of the undisturbed site measured between the planned entrance and all vehicular or pedestrian arrival points within 50 feet (15 240 mm) of the planned entrance exceed 15 per- cent; and

2. *The slopes of the planned finished grade measured between the entrance and all vehicular or pedestrian arrival points within 50 feet (15 240 mm) of the planned entrance also exceed 15 percent.*

   If there are no vehicular or pedestrian arrival points within 50 feet (15 240 mm) of the planned entrance, the slope for the purposes of Test No. 1 will be measured to the closest vehicular or pedestrian arrival point.

   For purposes of these requirements, vehicular or pedestrian arrival points include public or resident parking areas, public transportation stops, passenger loading zones, and public streets or sidewalks. To determine site impracticality, the slope would be measured at ground level from the point of the planned entrance on a straight line to (i) each vehicular or pedestrian arrival point that is within 50 feet (15 240 mm) of the planned entrance, or (ii) if there are no vehicular or pedestrian arrival points within the specified area, the vehicular or pedestrian arrival point closest to the planned entrance. In the case of sidewalks, the closest point to the entrance will be where a public sidewalk entering the site intersects with the walk to the entrance. In the case of resident parking areas, the closest point to the planned entrance will be measured from the entry point to the parking area that is located closest to the planned entrance.

TEST NO. 2 – SITE ANALYSIS TEST

For a site having multiple buildings, or a site with a single building with multiple entrances, it is not required to provide an accessible route under the following conditions:

1. *Calculate the percentage of the total buildable area of the undisturbed site with a natural grade less than 10 percent slope. The analysis of the existing slope (before grading) shall be done on a topographic survey with 2-foot (610 mm) contour intervals with slope determination made between each successive interval. The accuracy of the slope analysis shall be certified by a licensed engineer, landscape architect, architect or surveyor.*

2. *Determine the requirement of providing an accessible route to planned multifamily dwellings based on the topography of the existing natural terrain. The minimum percentage of ground-floor units required on an accessible route shall equal the percentage of the total buildable area (not restricted-use areas) of the undisturbed site with an existing natural grade of less than 10 percent slope.*

3. *In addition to the percentage established in paragraph (2), all ground-floor units in a building, or ground-floor units served by a particular entrance, shall be made accessible if the entrance to the units is on an accessible route with a slope between the planned entrance and a pedestrian or vehicular arrival point not exceeding 8.33 percent.*

TEST NO. 3 – UNUSUAL CHARACTERISTICS TEST

Unusual characteristics include sites located in a federally designated floodplain or coastal high-hazard area and sites subject to other similar requirements of law or code that the lowest floor or the lowest structural member of the lowest floor must be raised to a specified level at or above the base flood elevation. An accessible route to a building entrance is impractical due to unusual characteristics of the site when:

1. *The original site characteristics result in a difference in finished grade elevation exceeding 30 inches (762 mm) and 10 percent measured between an entrance and all vehicular or pedestrian arrival points within 50 feet (15 240 mm) of the planned entrance; or*

2. *If there are no vehicular or pedestrian arrival points within 50 feet (15 240 mm) of the planned entrance, the unusual characteristics result in a difference in finished grade elevation exceeding 30 inches (762 mm) and 10 percent measured between an entrance and the closest vehicular or pedestrian arrival point.*

1119A.1 [For HCD 1/AC] General. *Each building on a building site shall be considered separately when determining applicability of this chapter.*

1119A.2 [For HCD 1/AC] Additional Requirements for Section 1119A.

NOTE: *The following section was relocated from Section 101.17.9 with modifications.*

All other ground-floor dwelling units in nonelevator buildings shall be made to comply with the following requirements:

All other ground-floor dwelling units in nonelevator buildings shall be made to comply with the following requirements:

1. *Grab bar reinforcement: see Section 1109A.*
2. *32-inch (813 mm) clear door interior opening width: see Section 1109A.*
3. *Lever hardware: see Section 1120A.2.*
4. *Door signal devices: see Section 1106A.*
5. *Clear space by doors: (Chapters 10 and 11A).*
6. *Minimum 15-inch (381 mm) water closet seat height: see Section 1109A.*
7. *Electrical receptacle outlet height: [Article 210-7 (g.1), California Electrical Code, Title 24, Part 3].*
8. *Lighting and environmental control height: [Article 380-8 (c.1), California Electrical Code, Title 24, Part 3].*
9. *Faucet controls: See Section 1112A.3.*
10. *Water closet, bathtub and lavatory minimum space requirements: see Section 1109A.*
11. *Removable cabinets under the kitchen sink counter area: see Section 1112A.*

SECTION 1120A – [FOR HCD 1/AC & DSA/AC] GENERAL ACCESSIBILITY FOR ENTRANCES, EXITS AND PATHS OF TRAVEL

NOTE: *In addition to provisions of this section, exits that provide access to, or egress from, buildings for persons with disabilities shall also comply with Chapter 10, Section 1001.1 and 1003.2.10 and* ***[for DSA/AC]*** *Chapter 11B, Section 1133B.*

1120A.1 [For HCD 1/AC & DSA/AC] Building Accessibility. *See Chapter 10, Sections 1001.1 and 1003.2.10.*

1120A.1.1 [For HCD 1/AC & DSA/AC] Primary entrances and exterior exit doors. *All primary entrances and exterior ground floor exit doors to buildings and facilities shall be made accessible to persons with disabilities.*

1120A.1.2 [For HCD 1/AC & DSA/AC] Temporary restrictions. *During periods of partial or restricted use of a building or facility, the entrances used for primary access shall be accessible to and usable by persons with disabilities.*

1120A.1.3 [ForHCD1/AC & DSA/AC] Recessed doormats. *Recessed doormats shall be adequately anchored to prevent interference with wheelchair traffic.*

1120A.2 [For HCD 1/AC & DSA/AC] Doors.

1120A.2.1 [For HCD 1/AC & DSA/AC] Type of lock or latch. *See Chapter 10, Section 1003.3.1.8.*

1120A.2.2 [For HCD 1/AC & DSA/AC] Width and height of doors. *Every required exit doorway shall be of a size as to permit the installation of a door not less than 3 feet (914 mm) in width and not less than 6 feet 8 inches (2032 mm) in height.*

When installed in exit doorways, exit doors shall be capable of opening at least 90 degrees and shall be so mounted that the clear width of the exitway is not less than 32 inches (813 mm). In computing the exit width required by Section 1003.2.3 the net dimensions of the exitway shall be used.

1120A.2.3 [For HCD 1/AC & DSA/AC] Hinged doors. *For hinged doors, the opening width shall be measured with the door positioned at an angle of 90 degrees from its closed position.*

1120A.2.3.1 [For HCD 1/AC & DSA/AC] Pairs of doors. *Where a pair of doors is utilized, at least one of the doors shall provide a clear, unobstructed opening width of 32 inches (813 mm) with the leaf positioned at an angle of 90 degrees from its closed position.*

1120A.2.3.2 [For HCD 1/AC & DSA/AC] Automatic doors. *When an automatic door operator is utilized to operate a pair of doors, at least one of the doors shall provide a clear, unobstructed opening width of 32 inches (813 mm) with the door positioned at an angle of 90 degrees from its closed position.*

> ***EXCEPTION:*** *The provisions of Section 1120A.2.3.2 shall not apply to existing buildings, except when otherwise required under conditions applicable to access for persons with disabilities. See Chapter 1 and Section 101.17.9.*
>
> ***[For DSA/AC] NOTE:*** *For all existing publicly funded buildings and facilities see Chapter 11B, Division IV.*

1120A.2.3.3 [For HCD 1/AC & DSA/AC] Revolving doors. *Revolving doors shall not be used as a required entrance for persons with disabilities.*

1120A.2.4 [For HCD 1/AC w/exceptions & DSA/AC] Thresholds. *The floor or landing shall not be more than ½ inch (12.7 mm) lower than the threshold of the doorway.*

Changes in level between ¼ inch (6 mm) and ½ inch (12.7mm) shall be beveled with a slope no greater than 1 unit vertical in 2 units horizontal (50% slope). Changes in level greater than ½ inch (12.7 mm) shall be accomplished by means of a ramp.

> ***EXCEPTIONS:***
> ***1.*** *Section 1120A.2.4 shall not be enforced retroactively.*
>
> ***2.*** *At the primary entry door to dwelling units in covered multifamily buildings, with direct exterior access, outside landing surfaces constructed of impervious materials such as concrete, brick or flagstone, shall be no more than ½ inch (12.7 mm) below the floor level of the interior of the dwelling unit immediately adjacent to the primary entry door.*
>
> ***3.*** *Changes in elevation in covered multifamily dwellings shall comply with this provision. Except as provided at the primary entrance, thresholds at exterior doors, including sliding door tracks, shall be no higher than ¾ inch (19 mm). Thresholds and changes in level at these locations shall be beveled with a slope no greater than 1 unit vertical in 2 units horizontal (50% slope).*
>
> ***4.*** *Exterior deck, patio or balcony surfaces shall be no more than 4 inches (102 mm) below the floor level of the interior of the dwelling unit. Change in level greater than ½ inch (12.7 mm) shall be accomplished by means of a ramp.*

1120A.2.4.1 [For HCD 1/AC & DSA/AC] Level floor or landing. *See Chapter 10, Section 1003.3.1.6.1.2.*

1120A.2.4.2 [For HCD 1/AC & DSA/AC] Maneuvering clearances at doors. *The floor or landing on each side of an exit door shall be level. The level area shall have a length in the direction of the door swing of at least 60 inches (1524 mm) and the length opposite the direction of the door swing of 44 inches (1118 mm) as measured at right angles to the plane of the door in its closed position.*

> ***EXCEPTIONS:***
> ***1.*** *In Group R Occupancies, the level area shall have a length both in the direction of door swing and opposite the direction of door swing of 44 inches (1118 mm) as measured at right angles to the plane of the door in its closed position.*
>
> ***2.*** *In buildings containing covered multifamily dwelling units, the floor or landing immediately outside the entry may be sloped up to 1/8 inch (3 mm) per foot (12 inches) (305 mm), in a direction away from the primary entrance of the dwelling unit for drainage.*
>
> ***3.*** *Interior passage door(s) in individual Group R, Division 3, and Group U Occupancies and within individual units of Group R, Division 1 Occupancies, such length need not exceed 36 inches (914 mm).*

1120A.2.4.3 [For HCD 1/AC & DSA/AC] *The width of the level area on the side to which the door swings shall extend 24 inches (610 mm) past the strike edge of the door for exterior doors and 18 inches (457 mm) past the strike edge for interior doors.*

> ***NOTES:***
> ***1.*** *Twenty-four inches (610 mm) is preferred for strike-side clearance.*
>
> ***2.*** *See Section 1109A.2 and Tables 1109A.2-1 and 1109A.2-2 for bathrooms that are required to be accessible.*

1120A.2.4.4 [For HCD 1/AC & DSA/AC] Space between consecutive doors. *The space between two consecutive door openings in a vestibule, serving other than a required exit stairway shall provide a minimum of 48 inches (1219 mm) of clear space from any door opening into such vestibule when the door is positioned at an angle of 90 degrees from its closed position. Doors in a series shall swing either in the same direction or away from the space between the doors.*

Where the door opens into a stair or smoke proof enclosure, the landing need not have a length of 60 inches (1524 mm).

1120A.2.4.5 [For HCD 1/AC & DSA/AC] Egress from door. *Every exit door required by this section shall give immediate access to an approved means of egress from the building.*

1120A.2.5 [For HCD 1/AC & DSA/AC] Closer-Effort to operate doors. *Maximum effort to operate doors shall not exceed 8-½ pounds (38 N) for exterior doors and 5 pounds (22 N) for interior doors, such pull or push effort being applied at right angles to hinged doors and at the center plane of sliding or folding doors. Compensating devices or automatic door operators may be utilized to meet the above standards. When fire doors are required, the maximum effort to operate the door may be increased to the minimum allowable by the appropriate administrative authority, not to exceed 15 pounds (66.7 N).*

1120A.2.5.1 [For HCD 1/AC & DSA/AC] Hand-activated door hardware. *Hand-activated door-opening hardware shall be centered between 30 inches (762 mm) and 44 inches (1118 mm) above the floor. Latching and locking doors that are hand-activated and that are in a path of travel shall be operable with a single effort by lever-type hardware, panic bars, push-pull activating bars, or other hardware designed to provide passage without requiring the ability to grasp the opening hardware. Locked exit doors shall operate consistent with Section 1120A.2.5, in egress direction.*

1120A.2.6 [For HCD 1/AC & DSA/AC] Smooth surface. *The bottom 10 inches (254 mm) of all doors except automatic and sliding shall have a smooth, uninterrupted surface to allow the door to be opened by a wheelchair footrest without creating a trap or hazardous condition. Where narrow frame doors are used, a 10 inch (254 mm) high smooth panel shall be installed on the push side of the door, which will allow the door to be opened by a wheelchair footrest without creating a trap or hazardous condition.*

1120A.3 [For HCD 1/AC & DSA/AC] Corridors and Exterior Exit Balconies.

1120A.3.1 [For HCD 1/AC & DSA/AC] Corridor widths. *Every corridor serving an occupant load of 10 or more shall not be less than 44 inches (1118 mm) in width. Corridors serving an occupant load of less than 10 shall not be less than 36 inches (914 mm) in width.*

1120A.3.2 [For HCD 1/AC & DSA/AC] Corridors over 200 feet (60960 mm). *Corridors that exceed 200 feet (60960 mm) in length shall:*

1. *Have minimum clear width of 60 inches (1524 mm); or*

2. *Have at a central location, a 60-inch by 60-inch (1524 mm by 1524 mm) minimum wheelchair turning space or passing alcove; or*

3. *Have at a central location, an intervening cross or tee corridor a minimum of 44 inches (1118 mm) in width; or*

4. *Have, at a central location, an operable door.*

EXCEPTION [For HCD 1/AC]: *All corridors within privately funded multifamily dwelling units shall be at least 36 inches (914 mm) wide.*

1120A.3.3 [For DSA/AC w/exception 2 & HCD 1/AC w/exceptions 1 & 2] Changes in elevation. *When a corridor or exterior exit balcony is on an accessible route of travel, changes in elevation of the floor shall be made by means of a ramp, except as provided for doors by Section 1003.3.4.*

EXCEPTIONS:
1. *Changes in elevation in covered multifamily dwellings shall comply with this provision. Except as provided at the primary entrance, thresholds at exterior doors, including sliding door tracks, shall be no higher than ¾ inch (19 mm). Thresholds and changes in level at these locations shall be beveled with a slope no greater than 1 unit vertical in 2 units horizontal (50% slope).*

2. Exterior deck, patio or balcony surfaces shall be no more than 4 inches (102 mm) below the floor level of the interior of the dwelling unit. Change in level greater than ½ inch (12.7 mm) shall be accomplished by means of a ramp.

1120A.4 [For HCD 1/AC & DSA/AC] Handrails.

1120A.4.1 [For HCD1/AC with Exceptions 1, 2, 3, 4 and 5] [For DSA/AC with exceptions 2 & 3] Required handrails. *Stairways shall have handrails on each side, and every stairway required to be more than 88 inches (2235 mm) in width shall be provided with not less than one intermediate handrail for each 88 inches (2235 mm) of required width. Intermediate handrails shall be located equidistant with the width of the stairway.*

EXCEPTIONS:

1. *Stairways 44 inches (1118 mm) or less in width may have one handrail except that such stairways open on one or both sides shall have handrails provided on the open side or sides.*

2. *Stairways serving one individual dwelling unit in Group R, Division 1 or 3 Occupancies, may have one handrail, except that stairways open on one or both sides shall have handrails on the open side or sides.*

3. *Private stairways 30 inches (762 mm) or less in height may have handrails on one side only.*

4. *Stairways having three risers or less and stairways giving access to portable work stands less than 30 inches (762 mm) high are not required to have handrails.*

5. *Stairways less than 30 inches (762 mm) in width are permitted to have handrails on one side only.*

1120A.4.2 [For HCD 1/AC & DSA/AC] Handrail Configuration.

1120A.4.2.1 [For HCD 1/AC & DSA/AC] Handrail heights. *Handrails shall be 34 to 38 inches (864 to 965 mm) above the nosing of the treads.*

1120A.4.2.2 [For HCD 1/AC & DSA/AC] *Handrails shall extend a minimum of 12 inches (305 mm) beyond the top nosing and 12 inches (305 mm), plus the tread width, beyond the bottom nosing.*

1120A.4.2.3 [For HCD 1/AC & DSA/AC] Handrail ends. *Ends shall be returned or shall terminate in newel posts or safety terminals.*

1120A.4.2.4 [For HCD 1/AC & DSA/AC] Handrail extensions.
Where the extension of the handrail in the direction of the stair run would create a hazard, the termination of the extension shall be made either rounded or returned smoothly to floor, wall or post. Where the stairs are continuous from landing to landing, the inner rail shall be continuous and need not extend out into the landing.

1120A.4.2.5 [For HCD1/AC & DSA/AC] Handrail projections.
Handrails projecting from a wall shall have a space of 1-½ inches (38 mm) between the wall and the handrail.

Handrails may be located in a recess if the recess is a maximum of 3 inches (76 mm) deep and extends at least 18 inches (457 mm) above the top of the rail. Handrails shall not rotate within their fittings.

1120A.4.2.6 [For HCD 1/AC & DSA/AC] Handrail grips. *The handgrip portion of handrails shall not be less than 1-¼ inches (32 mm) nor more than 1-½ inches (38 mm) in cross-sectional dimension or the shape shall provide an equivalent gripping surface. The handgrip portion of handrails shall have a smooth surface with no sharp corners. Any wall or other surface adjacent to the handrail shall be free of sharp or abrasive elements. Edges shall have a minimum radius of 1/8 inch (3 mm).*

EXCEPTIONS:

1. *In covered multifamily dwellings, the diameter or width of the gripping surface of a handrail shall be 1-¼ inches (32 mm) to 1-½ inches (38 mm) or shaped to provide an equivalent gripping surface.*

2. *In covered multifamily dwellings, any wall or other surface adjacent to the handrail shall be free of any sharp or abrasive elements. Edges shall have a minimum radius of 1/8 inch (3 mm).*

1120A.4.3 [For HCD1/AC & DSA/AC] Striping for the visually impaired.
The upper approach and the lower tread of each stair shall be marked by a strip of clearly contrasting color at least 2 inches (51 mm) wide placed parallel to, and not more than 1 inch (25 mm) from, the nose of the step or landing to alert the visually impaired. The strip shall be of material that is at least as slip resistant as the other treads of the stair.

Where stairways occur outside a building, the upper approach and all treads shall be marked by a strip of clearly contrasting color at least 2 inches (51 mm) wide and placed parallel to and not more than 1 inch (25 mm) from the nose of the step or landing to alert the visually impaired. The strip shall be of a material that is at least as slip resistant as the other treads of the stair. A painted strip shall be acceptable.

1120A.4.3.1 [For HCD 1/AC & DSA/AC] Treads. *All tread surfaces shall be slip-resistant. Treads shall have smooth, rounded or chamfered exposed edges, and no abrupt edges at the nosing (lower front edge).*

1120A.4.3.2 [For HCD 1/AC & DSA/AC] Nosing. *Nosing shall not project more than 1-½ inches (38 mm) past the face of the riser below.*

1120A.4.3.3 [For HCD1/AC & DSA/AC] Open risers. *Open risers are not permitted on stairways outside of the dwelling unit.*

In covered multifamily buildings, open risers are not permitted on accessible routes of travel.

1120A.5 [For HCD 1/AC & DSA/AC] Ramps.

1120A.5.1 [For HCD 1/AC & DSA/AC] Widths as for exits. *The width of ramps shall be as required for stairways and exits.*

1120A.5.2 [For HCD 1/AC & DSA/AC] Width. *The width of ramps shall be as required for stairways and exits.*

1120A.5.3 [For HCD 1/AC & DSA/AC] Primary entrance and special occupancy. *Pedestrian ramps serving primary entrances to buildings having an occupant load of 300 or more shall have a minimum clear width of 60 inches (1524 mm). Ramps serving Group R Occupancies may be 36 inches (914 mm) clear width when the occupant load is 50 or less. All other pedestrian ramps shall have a minimum width of 48 inches (1219 mm).*

1120A.5.4 [For HCD 1/AC & DSA/AC] Slope. *The maximum slope of a ramp that serves any exit way, provides access for persons with physical disabilities or is in the path of travel shall be 1-foot (305 mm) rise in 12 feet (3658 mm) of horizontal run.*

1120A.5.4.1 [For HCD1/AC & DSA/AC] Cross slope. *The cross slope of ramp surfaces shall be no greater than 1 unit vertical in 50 units horizontal (2% slope).*

1120A.5.4.2 [For HCD 1/AC] Outdoor ramps. *See Chapter 10, Section 1006.3.4.1.1.*

1120A.5.5 [For HCD 1/AC & DSA/AC] Landings. *Ramp landings shall be installed as follows:*

1120A.5.5.1 [For HCD 1/AC & DSA/AC] Location of landings. *Landings shall be provided at the top and bottom of each ramp. Intermediate landings shall be provided at intervals not exceeding 30 inches (762 mm) of vertical rise and at each change of direction. Landings are not considered in determining the maximum horizontal distance of each ramp.*

NOTE: *Examples of ramp dimensions are:*

SLOPE (Grading %)	MAXIMUM RISE (Inches) (x 2.54 for mm)	MAXIMUM HORIZONTAL PROJECTION (Feet) (x 304.8 for mm)
1:12 (8.33%)	30	30
1:15 (6.67%)	30	37.5
1:16 (6.25 %)	30	40
1:20 (5.00 %)	30	50

1120A.5.5.2 [For HCD 1/AC w/exception & DSA/AC w/o exception] Size of top landings. *Top landings shall not be less than 60 inches (1524 mm) wide and shall have a length of not less than 60 inches (1524 mm) in the direction of ramp run.*

> ***EXCEPTION:*** *In covered multifamily buildings, the top landings shall not be less than 60 inches (1524 mm) wide and shall have a length of not less than 44 inches (1118 mm) in the direction of ramp run. The top landing width shall extend a minimum of 24 inches (610 mm) past the strike edge of the door.*

1120A.5.5.3 [For HCD 1/AC & DSA/AC] Encroachment of doors. *See Chapter 10, Section 1003.3.4.4.*

1120A.5.5.4 [For HCD1/AC & DSA/AC] Strike edge extension. *The width of the landing shall extend 24 inches (610 mm) past the strike edge of any door or gate for exterior ramps and 18 inches (457 mm) past the strike edge for interior ramps.*

1120A.5.5.5 [For HCD 1/AC & DSA/AC] Landing width. *At bottom and intermediate landings, the width shall be at least the same as required for the ramps.*

1120A.5.5.6 [For HCD 1/AC & DSA/AC] Change of direction. *Intermediate and bottom landings at a change of direction in excess of 30 degrees shall have a dimension in the direction of ramp run of not less than 72 inches (1829 mm) to accommodate the handrail extension.*

1120A.5.5.7 [For HCD 1/AC & DSA/AC] Other intermediate landings. *Other intermediate landings shall have a dimension in the direction of ramp run of not less than 60 inches (1524 mm).*

1120A.5.5.8 [For HCD 1/AC & DSA/AC] *For existing ramps or ramps not covered by Section 1003.3.4, landings shall be provided as set forth in Section *****1003.3.4.*

1120A.5.5.9 [For HCD 1/AC & DSA/AC] Hazards. *Required ramps shall have a curb at least 2 inches (51 mm) high, or a wheel guide rail 2 to 4 inches (51 to 102 mm) high on each side of the ramp landing that has a vertical drop exceeding 4 inches (102 mm) and that is not bounded by a wall or fence.*

1120A.5.6 [For HCD 1/AC & DSA/AC w/exceptions 1, 2 and 3] Handrails. *Handrails are required on ramps that provide access if slope exceeds 1 foot rise in 20 feet of horizontal run (5% slope). Handrails shall be placed on each side of each ramp, shall be continuous the full length of the ramp, shall be 34 to 38 inches (864 to 965 mm) above the ramp surface, shall extend a minimum of 1 foot (305 mm) beyond the top and bottom of the ramp, and the ends shall be returned. Handrails projecting from a wall shall have a space of not less than 1-½ inches (38mm) between the wall and the handrail. Handrails may be located in a recess if the recess is a maximum of 3 inches (76 mm) deep and extends at least 18 inches (457 mm) above the top of the rail. The grip portion shall not be less than 1-¼ inches (32 mm) nor more than 1-½ inches (38 mm), or the shape shall provide an equivalent gripping surface and all surfaces shall be smooth with no sharp corners. Handrails shall not rotate within their fittings. Any wall or other surface adjacent to the handrail shall be free of sharp or abrasive elements. Edges shall have a minimum radius of 1/8 inch (3 mm).*

> ***EXCEPTIONS:***
> ***1.*** *Curb ramps do not require handrails.*
>
> ***2.*** *Covered multifamily buildings that are required to provide ramps for persons with physical disabilities shall have handrails if the slope exceeds 1 foot of rise in 20 feet of horizontal run (5% slope).*
>
> ***3.*** *Ramps that require handrails and that serve one individual dwelling unit in Group R, Division 1 or 3 Occupancies may have one handrail except that such ramps open on one or both sides shall have handrails provided on the open side or sides.*

1120A.5.7 [For HCD 1/AC, DSA/AC] Wheel guides. *Where the ramp surface is not bounded by a wall or fence and the ramp exceeds 10 feet (3048 mm) in length, the ramp shall comply with one of the following requirements:*

> ***1.*** *A guide curb a minimum of 2 inches (51 mm) in height shall be provided at each side of the ramp; or*
>
> ***2.*** *A wheel guide rail shall be provided, centered 3 inches (76 mm) plus or minus 1 inch (25 mm) above the surface or the ramp.*

***** In 1120A.5.5.8 the cross-reference to Section 1003.3.4.4 (Landings) is incorrect. Reference should read 1003.3.4.4 for landings. This will be submitted for correction in Rulemaking.

1120A.5.8 [For HCD 1/AC & DSA/AC] Ramp heights. *Ramps more than 30 inches (762 mm) above the adjacent ground shall be provided with guardrails as required by Section 509, and handrails as required in Section 1003.3.4.5. Such guardrails shall be continuous from the top of the ramp to the bottom of the ramp.*

1120A.6 [For HCD 1/AC & DSA/AC] Walks and Sidewalks.

1120A.6.1 [For HCD 1/AC & DSA/AC] Continuous surface. *Walks and sidewalks subject to these regulations shall have a continuous common surface, not interrupted by steps or by abrupt changes in level exceeding ½ inch (12.7 mm) (see Section 1120A.6.3), and shall be a minimum of 48 inches (1219 mm) in width. Surfaces shall be slip-resistant as follows:*

1. Slopes less than 6 percent. *Surfaces with a slope of less than 6 percent gradient shall be at least as slip-resistant as that described as a medium salted finish.*

2. Slopes 6 percent or greater. *Surfaces with a slope of 6 percent gradient shall be slip-resistant.*

3. Surface cross slopes. *Surface cross slopes shall not exceed ¼ inch (6 mm) per foot except when the enforcing agency finds that due to local conditions it creates an unreasonable hardship, the cross slope shall be increased to a maximum of ½ inch (12.7 mm) per foot for distances not to exceed 20 feet (6096 mm).*

EXCEPTION: *Sidewalks serving individual dwelling units in privately covered multifamily buildings may be reduced to 36 inches (914 mm) in clear width. All other sidewalks shall be a minimum of 48 inches (1219 mm) in clear width.*

1120A.6.2 [For HCD 1/AC & DSA/AC] Gratings. *Walks, sidewalks and pedestrian ways shall be free of gratings whenever possible. For gratings located in the surface of any of these areas, grid openings in gratings shall be limited to ½ inch (12.7 mm) in the direction of traffic flow.*

EXCEPTIONS:
1. *Where the enforcing agency determines that compliance with this section would create an unreasonable hardship, an exception may be granted when equivalent facilitation is provided.*

2. *This section shall not apply in those conditions where, due to legal or physical constraints, the site of the project will not allow compliance with these building standards or equivalent facilitation without creating an unreasonable hardship. See Section 101.17.11, Item 4.*

1120A.6.3 [For HCD 1/AC & DSA/AC] Five percent gradient. *When the slope in the direction of travel of any walk exceeds 1 unit vertical in 20 units horizontal (5% slope), it shall comply with the provisions of Section 1120A.5, Ramps.*

1120A.6.4 [For HCD 1/AC] Changes in level.

1120A.6.4.1 [For HCD 1/AC] Abrupt changes. *Abrupt changes in level along any accessible route shall not exceed ½ inch (12.7 mm). When changes in level do occur, they shall be beveled with a slope no greater than 1 unit vertical in 2 units horizontal (50% slope), except that level changes not exceeding ¼ inch (6 mm) may be vertical. When changes in levels greater than ½ inch (12.7 mm) are necessary, they shall comply with the requirements for curb ramps.*

NOTE: *See Section 1117A.4.*

1120A.6.5 [For HCD1/AC & DSA/AC] Level areas. *Walks shall be provided with a level area not less than 60 inches by 60 inches (1524 mm by 1524 mm) at a door or gate that swings toward the walk, and not less than 48 inches wide by 44 inches (1219 mm by 1118 mm) deep at a door or gate that swings away from the walk.*

Such walks shall extend 24 inches (610 mm) to the side of the strike edge of a door or gate that swings toward the walk. (For an example, see Figure 11B-26B.)

1120A.6.6 [For HCD 1/AC & DSA/AC] Walks with continuous gradients. *All walks with continuous gradients shall have level areas at least 5 feet (1524 mm) in length at intervals of at least every 400 feet (121 920 mm).*

1120A.7 [For HCD 1/AC & DSA/AC] Hazards.

1120A.7.1 [For HCD 1/AC & DSA/AC] Warning curbs. *Abrupt changes in level, except between a walk or sidewalk and an adjacent street or driveway, exceeding 4 inches (102 mm) in a vertical dimension, such as at planters or fountains located in or adjacent to walks, sidewalks or other pedestrian ways, shall be identified by curbs projecting at least 6 inches (152 mm) in height above the walk or sidewalk surface to warn the blind of a potential drop off.*

When a guardrail or handrail is provided, no curb is required when a guide rail is provided centered 3 inches (76 mm) plus or minus 1 inch (25 mm) above the surface of the walk or sidewalk, the walk is 5 percent or less gradient, or no adjacent hazard exists.

1120A.7.2 [For HCD 1/AC & DSA/AC] Overhanging obstructions. *Any obstruction that overhangs a pedestrian's way shall be a minimum of 80 inches (2032 mm) above the walking surface as measured from the bottom of the obstruction. Where a guy support is used parallel to a path of travel, including, but not limited to, sidewalks, a guy brace, sidewalk guy or similar device shall be used to prevent an overhanging obstruction as defined (see Figure 11B-28).*

Hazards such as drop-offs adjacent to walkways or overhanging obstructions can be dangerous to persons with vision problems. This section addresses these situations.

1120A.7.2.1 [For HCD 1/AC] Free-standing signs. *Whenever signs mounted on posts or pylons protrude from the posts or pylons and the bottom edge of the sign is below 80 inches (2032 mm) above the finished floor or ground level, the edges of such signs shall be rounded or eased, and the corners shall have a minimum radius of 0.125 inches.*

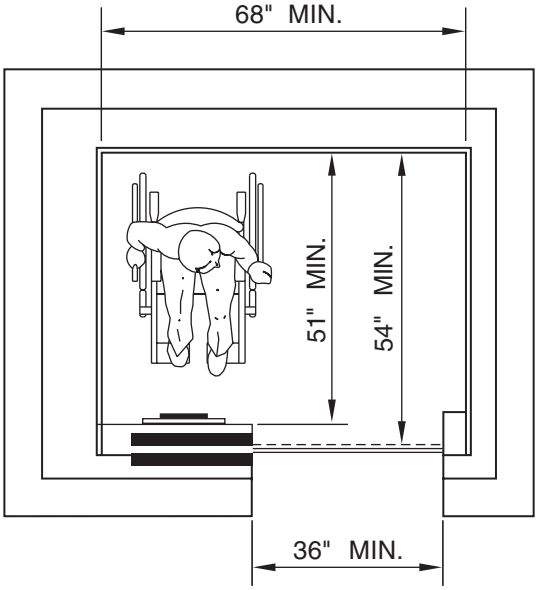

(a) SIDE OPENING DOOR

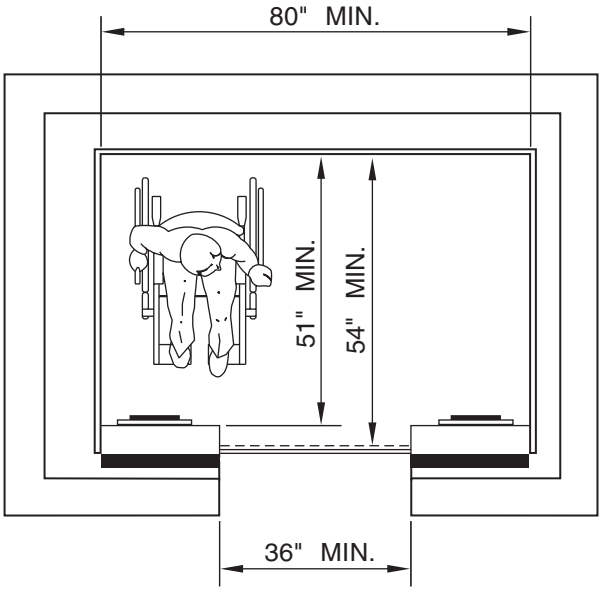

(b) CENTER OPENING DOOR

THIS DIAGRAM ILLUSTRATES THE SPECIFIC REQUIREMENTS OF THESE REGULATIONS AND IS INTENDED ONLY AS AN AID FOR BUILDING DESIGN AND CONSTRUCTION

FIGURE 11A-A—MINIMUM DIMENSIONS OF ELEVATOR CARS

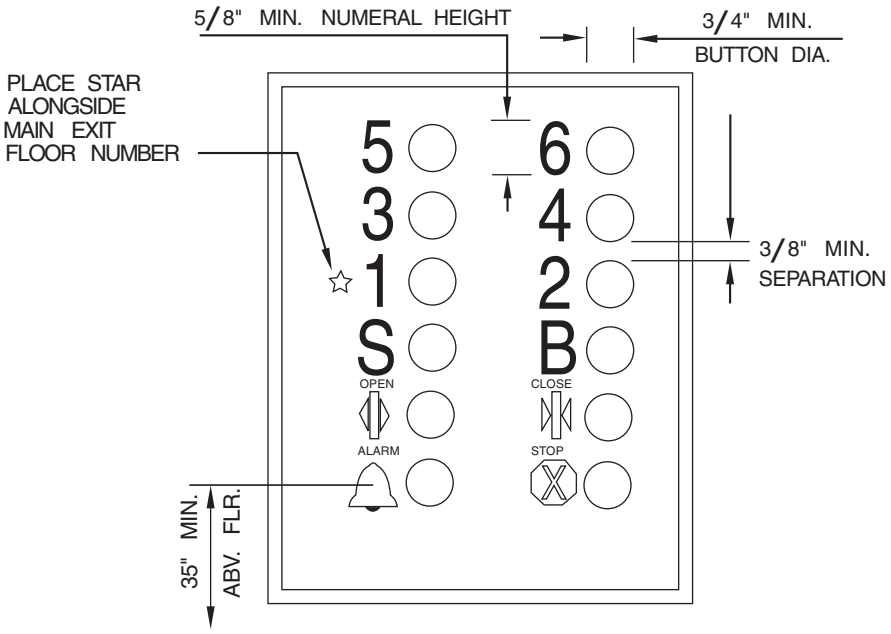

(a) ELEVATOR CONTROL PANEL DETAIL

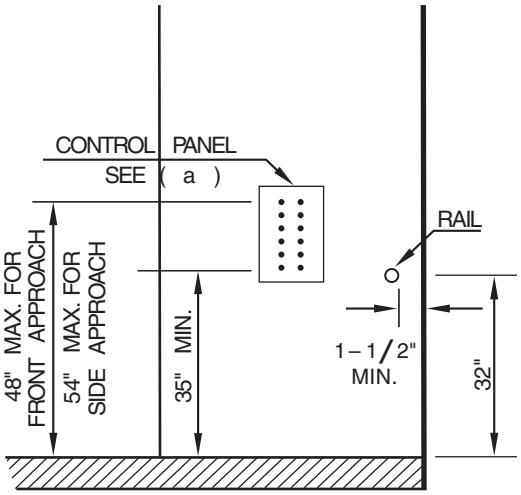

(b) MAXIMUM INSTALLATION HEIGHTS ABOVE CAB FLOOR

THIS DIAGRAM ILLUSTRATES THE SPECIFIC REQUIREMENTS OF THESE REGULATIONS AND IS INTENDED ONLY AS AN AID FOR BUILDING DESIGN AND CONSTRUCTION.

FIGURE 11A-B—ELEVATOR CONTROL PANEL

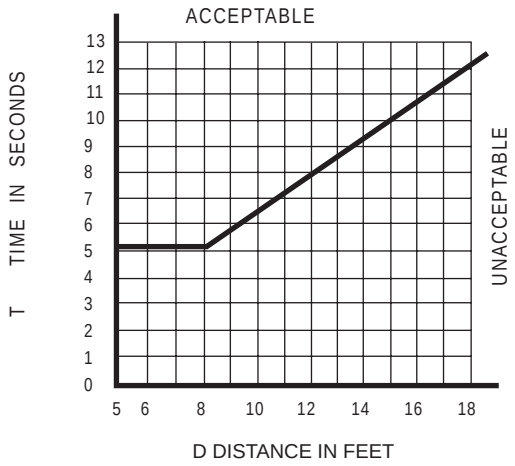

THIS DIAGRAM ILLUSTRATES THE SPECIFIC REQUIREMENTS OF THESE REGULATIONS AND IS INTENDED ONLY AS AN AID FOR BUILDING DESIGN AND CONSTRUCTION.

FIGURE 11A-C—GRAPH OF TIMING EQUATION

CHAPTER 11B [For DSA/AC]
ACCESSIBILITY TO PUBLIC BUILDINGS, PUBLIC ACCOMMODATIONS, COMMERCIAL BUILDINGS AND PUBLICLY FUNDED HOUSING

NOTE: *For housing accessibility, see Chapter 11A.*

Division I – NEW BUILDINGS

SECTION 1101B – SCOPE

See Chapter 1, Section 101.17.11.

1101B.1 General. *Buildings or portions of buildings shall be accessible to persons with disabilities as required by this chapter.*

1101B.2 Design. *The design and construction of accessible building elements shall be in accordance with this chapter and sections that are listed in Section 1114B.1.1.*

1101B.3 Maintenance of Accessible Features.

1. *A public accommodation shall maintain in operable working condition those features of facilities and equipment that are required to be accessible to and usable by persons with disabilities.*

2. *This section does not prohibit isolated or temporary interruptions in service or access due to maintenance or repairs.*

1101B.4 Dimensional Tolerances. *All dimensions are subject to conventional building industry tolerances for field conditions.*

SECTION 1102B – DEFINITIONS

For the purpose of the chapter, certain terms are defined as follows:

ACCESSIBILITY *is the combination of various elements in a building or area, which allows access, circulation and the full use of the building and facilities by persons with disabilities.*

ACCESSIBLE *is approachable and usable by persons with disabilities in compliance with this code.*

ACCESSIBLE ROUTE OF TRAVEL *is a continuous unobstructed path connecting all accessible elements and spaces in an accessible building or facility that can be negotiated by a person with a severe disability using a wheelchair and that is also safe for and usable by persons with other disabilities, and that is consistent with the definition of "path of travel" in Section 217.*

ADAPTABILITY *refers to the capability of spaces or facilities to be readily modified and made accessible.*

AREA FOR EVACUATION ASSISTANCE *is an accessible space which is protected from fire and smoke and which facilitates a delay in egress.*

AUTOMATIC DOOR *is a door equipped with a power operated mechanism and controls that open and close the door automatically upon receipt of a momentary actuating signal. The switch that begins the automatic cycle may be a photoelectric device, floor mat or manual switch.*

COMMONUSE AREAS *are public areas where the uses of the space is not limited exclusively to owners, residents or individual employees.*

CROSS SLOPE *is the slope that is perpendicular to the direction of travel.*

CURB CUT *is an interruption of a curb at a pedestrian way, which separates surfaces that are substantially at the same elevation.*

CURB RAMP *is a sloping pedestrian way, intended for pedestrian traffic, which provides access between a walk or sidewalk to a surface located above or below an adjacent curb face.*

DETECTABLE WARNING *is a standardized surface or feature built into or applied to walking surfaces or other elements to warn visually impaired persons of hazards in the path of travel. Only approved DSA/AC detectable warning products and directional surfaces shall be installed as provided in the California Code of Regulations (CCR). Title 24, Part 1, Articles 2, 3 and 4. Refer to CCR Title 24, Part 12, Chapter 12-11A and B, for building and facility access specifications for product approval for detectable warning products and directional surfaces.*

> ***NOTE:*** *Detectable warning products and directional surfaces installed after January 1,2001, shall be evaluated by an independent entity, selected by the Department of General Services, Division of the State Architect-Access Compliance, for all occupancies, including transportation and other outdoor environments, except that when products and surfaces are for use in residential housing evaluation shall be in consultation with the Department of Housing and Community Development. See Government Code Section 4460.*

DWELLING UNIT *is a single unit of residence for a family of one or more persons. Examples of dwelling units covered by this chapter include condominiums, an apartment unit within an apartment building, and other types of dwellings in which sleeping accommodations are provided but toileting or cooking facilities are shared by occupants of more than one room or portion of the dwelling. Examples of the latter include dormitory rooms and sleeping accommodations in shelters intended for occupancy as residences for homeless persons.*

ELEVATOR, PASSENGER *is an elevator used primarily to carry passengers.*

EQUIVALENT FACILITATION *is an alternate means of complying with the literal requirements of these standards and specifications that provides access in terms of the purpose of these standards and specifications.*

> ***NOTES:***
> ***1.*** *See Section 101.2, Purpose.*
>
> ***2.*** *In determining equivalent facilitation, consideration shall be given to means that provide for the maximum independence of persons with disabilities while presenting the least risk of harm, injury or other hazard to such persons or others.*

FACILITY (or FACILITIES) *is a building, structure, room, site, complex or any portion thereof, that is built, altered, improved or developed to serve a particular purpose.*

GRAB BAR *is a bar for the purpose of being grasped by the hand for support.*

HANDRAIL *is a device to be used as a hand hold.*

INDEPENDENT ENTITY. *See Chapter 2, Section 210-I.*

> ***NOTE:*** *Detectable warning products and directional surfaces installed after January 1, 2001, shall be evaluated by an independent entity, selected by the Department of General Services, Division of the State Architect-Access Compliance, for all occupancies, including transportation and other outdoor environments, except that when products and surfaces are for use in residential housing evaluation shall be in consultation with the Department of Housing and Community Development. See Government Code Section 4460.*

INTERNATIONAL SYMBOL OF ACCESSIBILITY *is that symbol adopted by Rehabilitation International's 11th World Congress for the purpose of indicating that buildings and facilities are accessible to persons with disabilities. See Chapter 11B, Figure 11B-6.*

KICK PLATE *is an abrasion-resistant plate affixed to the bottom portion of a door to prevent a trap condition and protect its surface.*

LEVEL AREA *is a specified surface that does not have a slope in any direction exceeding 1/4 inch (6.4 mm) in 1 foot (305 mm) from the horizontal (2.083 percent gradient).*

****LIFT, SPECIAL ACCESS.*** *"See Special Access Lift."*

MARKED CROSSING *is a crosswalk or other identified path intended for pedestrian use in crossing a vehicular way.*

****NEWLY CONSTRUCTED*** *is a building that has never before been used or occupied for any purpose.*

NOSE, NOSING, *is that portion of a tread projecting beyond the face of the riser immediately below.*

OPEN RISER *is the air space between tread projecting beyond the face of the riser immediately below.*

PASSAGE DOOR *is a door other than an exit door through which persons may traverse.*

PEDESTRIAN *is an individual who moves in walking areas with or without the use of walking assistive devices such as crutches, leg braces, wheelchairs, etc.*

PEDESTRIAN RAMP *is a sloping path of travel intended for pedestrian traffic and as differentiated from a curb ramp.*

PEDESTRIAN WAY *is a route by which a pedestrian may pass.*

PRIMARY ENTRY LEVEL *is the floor or level of the building on which the primary entry is located.*

****PUBLIC USE AREA*** *means interior or exterior rooms or spaces of a building that are made available to the general public and does not include Common Use Areas as defined in Section 1102A.3-C. Public Use Areas may be provided at a building that is privately or publicly owned.*

RISER *is the vertical distance from the top of the tread to the top of the next higher tread.*

SLEEPING ACCOMMODATIONS *are rooms in which people may sleep; for example, dormitory and hotel or motel guest rooms or suites.*

SPECIAL ACCESS LIFT *is a hoisting and lowering mechanism equipped with a car or platform, or support that serves two landings of a building or structure and is designed to carry a passenger or passengers and (or) luggage or other material a vertical distance as may be allowed.*

STAIR RAILING *is a vertical barrier constructed along the open side or sides of stairways and as intermediate stair rails where required on wide stairways.*

TREAD *is the horizontal member of a step.*

TREAD DEPTH *is the horizontal distance from the front to back of tread, including nosing when used.*

TREAD RUN *is the horizontal distance from the leading edge of a tread to the leading edge of an adjacent tread.*

> ***NOTE:*** *For additional definitions pertinent to the Division of the State Architect/Access Compliance accessibility requirements, see Chapter 2.*

WALK *is a surfaced pedestrian way not located contiguous to a street used by the public. (See definition for "sidewalk".)*

> ***NOTE:*** *For additional definitions pertinent to the Division of the State Architect-Access Compliance accessibility requirements, see Chapter 2.*

---

* The definitions of Lift, Special Access, Newly Constructed, and Public Use Area were erroneously left out of Chapter 11B. This will be submitted for correction in Rulemaking.

SECTION 1103B – BUILDING ACCESSIBILITY

1103B.1 General. *Accessibility to buildings or portions of buildings shall be provided for all occupancy classifications except as modified or enhanced by this chapter. Occupancy requirements in this chapter may modify general requirements, but never to the exclusion of them. Multistory buildings must provide access by ramp or elevator.*

In new construction of buildings and only where elevators are required, pursuant to Section 1103B.1, and which exceed 10,000 square feet on any floor, an accessible means of vertical access via ramp, elevator or lift shall be provided within 200 feet of travel of each stairs and each escalator. In existing buildings that exceed 10,000 square feet on any floor and in which elevators are otherwise required pursuant to Section 1103B.1, whenever a newly constructed means of vertical access is provided via stairs or an escalator, an accessible means of vertical access via ramp, elevator or lift shall be provided within 200 feet of travel of each new stairs or escalator.

EXCEPTIONS:

1. *This section shall not apply with respect to stairs used solely for emergency egress.*

2. *Floors or portions of floors not customarily occupied, including, but not limited to, nonoccupiable or employee spaces accessed only by ladders, catwalks, crawl spaces, very narrow passageways or freight (nonpasssenger) elevators, and frequented only by service personnel for repair or maintenance purposes: such spaces as elevator pits and elevator penthouses, piping and equipment catwalks and machinery rooms. Stair stripping shall be required on stairs.*

3. *The following types of privately funded multistory buildings do not require a ramp or elevator above and below the first floor:*

3.1 *Multistoried office buildings (other than the professional office of a health care provider) and passenger vehicle service stations less than three stories high or less than 3,000 square feet (279 m2) per story.*

3.2 *Any other privately funded multistoried building that is not a shopping center, shopping mall or the professional office of a health care provider, and that is less than three stories high or less than 3,000 square feet (279 m2) per story if a reasonable portion of all facilities and accommodations normally sought and used by the public in such a building are accessible to and usable by persons with disabilities.*

SECTION 1104B – ACCESSIBILITY FOR GROUP A OCCUPANCIES

1104B.1 General. *All Group A Occupancies shall be accessible as provided in this chapter. See also the general requirements listed in Section 1114B.1.1.*

1104B.2 Assistive-listening Systems in Assembly Areas. *Assembly areas, conference and meeting rooms shall provide assistive-listening systems for persons with hearing impairments as provided in this section.*

EXCEPTION: *This section does not apply to systems used exclusively for paging, or background music, or a combination of these two uses.*

1. Number of personal receivers required. *The minimum number of receivers to be provided shall be equal to 4 percent of the total number of seats, but in no case less than two.*

2. Types of listening systems. *Types of assistive-listening systems include, but are not limited to, audio-induction loops, radio frequency systems (AM or FM) and infrared transmission.*

3. Location. *If the assistive-listening system provided is limited to specific areas or seats, then such areas or seats shall be within a 50-foot (15 240 mm) viewing distance of the performing area.*

4. Signage. *A sign shall be posted in a prominent place indicating the availability of assistive-listening devices. The sign shall include the international symbol of access for hearing loss and wording that states "Assistive-listening System Available". See Figure 11B-14.*

5. Fees and charges. *Nothing in this section shall preclude a facility charging for such assistive-listening system its usual fee for audiovisual equipment. However, no surcharge may be placed directly on any particular individual with a disability or any group of individuals with disabilities to cover the costs of such equipment.*

6. Portable systems. *If portable assistive-listening systems are used for conference or meeting rooms, the system may serve more than one room. However, permanently installed assistive-listening systems are required in areas if (1) they accommodate at least 50 persons or if they have audio-amplification systems, and (2) they have fixed seating.*

1104B.3 Auditoriums, Assembly Halls, Theaters and Related Facilities.

1104B.3.1 Seating. *In all assembly places where seating is provided, there shall be spaces for persons using wheelchairs and semi ambulant persons, as provided in this section.*

> ***EXCEPTIONS:***
> ***1.*** *In existing buildings and facilities when the enforcing agency determines that compliance with the seating requirements of this code would create an unreasonable hardship, such requirements shall not apply. When the unreasonable hardship finding is applied, at least 1 percent of the total seating provided shall be accessible to and usable by persons with disabilities who use wheelchairs and such seating shall comply with the level requirements and the individual space requirements of this code.*
>
> ***2.*** *When an existing theater is subdivided into more than one facility having upper levels not accessible by ramp or elevator, and the enforcing agency determines that full compliance with this code would create an unreasonable hardship, such upper levels need not be made accessible, provided all facilities at grade are accessible and any event, showing of motion pictures or other activities made available to the public in all of the facilities are scheduled to ensure that all such functions are available to the public in the accessible facility.*

1104B.3.2 Accessibility to key facilities. *Seating for persons with disabilities shall be accessible from the main lobby or from a primary entrance, together with related toilet facilities.*

1104B.3.3 Variety of locations. *Accessible seating or accommodations in places of public amusement and resort, including theaters, concert halls and stadiums, but not including hotels and motels, shall be provided in a variety of locations so as to provide persons with disabilities a choice of admission prices otherwise available to members of the general public.*

1104B.3.4 Wheelchair spaces.

1. *The number of such spaces is as shown in Table 11B-1.*

TABLE 11B-1 – WHEELCHAIR SEATING SPACES

SEATING CAPACITY	NO. OF WHEELCHAIR SEATING SPACES
4 to 26	1
27 to 50	2
51 to 300	4
301 to 500	6

In addition, 1 percent, but not less than one, of all fixed seats, shall be aisle seats with no armrests on the aisle side, or removable or folding armrests on the aisle side. Each such seat shall be identified by a sign or marker. Signage notifying patrons of the availability of such seats shall be posted at the ticket office.

2. *When the seating capacity exceeds 500, one additional wheelchair seating space shall be provided for each total seating capacity increase of 100.*

3. *The ground or floor at spaces shall be level and shall comply with Section 1124B.*

1104B.3.5 Placement of wheelchair locations. *Wheelchair areas shall be an integral part of any fixed seating plan, and shall be arranged so as to provide persons with disabilities a choice of admission prices and lines of sight comparable to those for members of the general public. Each wheelchair area shall adjoin an accessible route which shall also serve as a means of egress in case of emergency. At least one companion fixed seat shall be provided next to each wheelchair seating area. When the seating capacity exceeds 300, wheelchair spaces shall be provided in more than one location in addition to complying with Section 1104B.3.3.*

EXCEPTION: *Accessible viewing positions where seating capacity is less than 300 may be clustered for bleachers, balconies and other areas having sight lines that require slopes of greater than 5 percent. Equivalent accessible viewing positions may be located on levels having accessible egress.*

1104B.3.6 Size of wheelchair location. *Each wheelchair location shall provide minimum clear floor or ground space as shown in Figure 11B-15, and shall adjoin an egress aisle on at least one side.*

1104B.3.7 Removable seats. *Readily removable seats may be installed in these wheelchair spaces when such spaces are not required to accommodate wheelchair users.*

1104B.3.8 Seating for semi ambulant individuals. *In addition to spaces provided for wheelchair users as noted in Sections 1104B.3.4 through 1104B.3.7 above, there shall be provided seating for semi ambulant individuals. The number of such seating shall be equal to at least 1 percent of the total seating and shall be no fewer than two. Such seats shall provide at least 24 inches (610 mm) clear leg space between the front of the seat to the nearest obstruction or to the back of the seat immediately in front.*

1104B.3.9 Life safety. *In determining the location of seating for persons with disabilities, life safety shall be considered, and all seating provided must comply with the fire and panic safety requirements of the state fire marshal.*

1104B.3.10 Access to performing areas. *An accessible route shall connect wheelchair seating locations with performing areas, including stages, arena floors, dressing rooms, locker rooms and other spaces used by performers.*

1104B.3.11 Stages, enclosed and unenclosed platforms, and orchestra pits. *Stages, enclosed and unenclosed platforms, and orchestra pits shall be made accessible to persons with disabilities.*

EXCEPTIONS:
1. *When the enforcing agency finds that requiring compliance with this code, for an enclosed or unenclosed platform or depressed area not more than 24 inches (610 mm) above or below an adjacent accessible level, would create an unreasonable hardship, the enclosed and unenclosed platform or depressed area shall be made accessible by a portable ramp with a slope not exceeding 1 unit vertical to 12 units horizontal (8.33% slope).*

2. *In existing buildings and facilities, all stages, enclosed or unenclosed platforms, and orchestra pits need not be accessible when the enforcing agency determines that compliance with this code would create an unreasonable hardship.*

1104B.3.12 Ticket booths. *Customer and employee sides of ticket booths and of concession and refreshment sales facilities shall be made accessible to persons with disabilities.*

1104B.3.13 Miscellaneous areas. *Public toilets and other public areas shall be made accessible to persons with disabilities.*

1104B.4 Stadiums, Grandstands, Bleachers, Athletic Pavilions, Gymnasiums and Miscellaneous Sport-related Facilities.

1104B.4.1 Spectator seating. *Spectator seating shall comply with Section 1104B.3.*

1104B.4.2 Ticket booth. *The customer side of a ticket booth shall be, and the employee side may be, accessible.*

1104B.4.3 Participation areas. *Participation areas shall be accessible to persons with disabilities, including the following listed and similar activity areas:*

1. *Tennis, racquetball and handball courts.*

2. *Gymnasium floor areas and general exercise rooms.*

3. *Basketball, volleyball and badminton courts, and bowling lanes.*

4. *Swimming pool deck areas must be accessible, and a mechanism to assist persons with disabilities in gaining entry into the pool and in exiting from the pool shall be provided. Such a mechanism may consist of a swimming pool lift device as long as the device meets all of the following criteria:*

4.1 *Have a seat that meets all of the following:*

4.1.1 *The seat must be rigid;*

4.1.2 *The seat must be not less than 17 inches (423 mm) and not more than 19 inches (483 mm), inclusive of any cushioned surface that might be provided, above the pool deck;*

4.1.3 *The seat must have two armrests. The armrest on the side of the seat by which access is gained shall be either removable or fold clear of the seat;*

4.1.4 *The seat must have a back support that is at least 12 inches (305 mm) tall;*

4.1.5 *The seat must have an occupant restraint for use by the occupant of the seat, and the restraint must meet the standards for operable controls in compliance with Section ***1117B.6-4.***

4.2 *Be capable of unassisted operation from both the deck and water levels.*

4.3 *Be stable and not permit unintended movement when a person is getting into or out of the seat.*

4.4 *Be designed to have a live-load capacity of not less than 300 pounds.*

4.5 *Be positioned so that, if the pool has water of different depths, it will place the operator into water that is at least three feet (914 mm) deep.*

4.6 *Lower the operator at least 18 inches (457 mm) below the surface of the water.*

5. *Athletic team rooms and facilities, playing fields and running tracks.*

1104B.4.4 Clubrooms. *Clubrooms shall be made accessible to persons with disabilities.*

1104B.4.5 Sanitary and locker facilities. *Where spectator and/or participant sanitary and/or locker facilities are provided, they shall conform with the requirements in Sections 1115B and 1116B.*

EXCEPTIONS:
1. *Where the enforcing agency determines that compliance with these regulations would create an unreasonable hardship, an exception may be granted when equivalent facilitation is provided through the use of other methods or materials.*

2. *In existing buildings, when the enforcing agency finds that compliance with regulations would create an unreasonable hardship, an exception may be granted when all of the following minimum conditions are met:*

2.1 *When the total seating does not exceed 5,000 at least 1 percent of such seating shall be accessible to and usable by persons with disabilities. When the total seating provided exceeds 5,000, one additional seat for each 2,000 seats provided over 5,000 shall be accessible to and usable by persons with disabilities.*

2.2 *Sanitary facilities, ticket booths, clubrooms, concessions and refreshment facilities be accessible.*

2.3 *One of each type of participation area is usable and accessible.*

1104B.5 Dining, Banquet and Bar Facilities.

1. General. *Dining, banquet, and bar facilities shall be made accessible to persons with disabilities as provided in this section.*

EXCEPTIONS:
1. *In existing buildings, when the enforcing agency determines that compliance with any regulation under this section would create an unreasonable hardship, an exception shall be granted when equivalent facilitation is provided.*

2. *In existing buildings, these regulations shall not apply when legal or physical constraints would not allow compliance with these regulations or equivalent facilitation without creating an unreasonable hardship. See Section 101.17.11, ****Item 4.***

***** In 1104B.4.3 (Participation areas) Items 4.1.5 the cross-reference to 1117B.6-4 is incorrect. Cross-reference should read 1117B.6 with Items 1-4. This will be submitted for correction in Rulemaking.
** In 1104B.5 (Dining, Banquet and Bar Facilities) #1 (General) Exception 2 cross-reference to Section 101.17.11, Item 4 is incorrect. Cross-reference should read Item 5.

2. Entrance. *Access to these facilities shall be provided at entrances and exits a required by Section 1133B.1.1.*

3. Functional activity. *Wheelchair access shall be provided to all areas where each type of functional activity occurs.*

4. Seating. *Each dining, banquet and bar area shall have one wheelchair seating space for each 20 seats, with at least one minimum wheelchair seating space per functional area. Such seating shall be designed and arranged to permit use by wheelchair occupants, and shall comply with Section 1122B, "Fixed or Built-in Seating, Tables, and Counters." Access to such seating spaces shall be provided with main aisles not less than 36 inches (914 mm) clear width. Accessible seating spaces shall be integrated with general seating to allow a reasonable selection of seating area and to avoid having one area specifically highlighted as the area for persons with disabilities. The ratio of accessible seating is based on the total number of seats provided.*

5. Food service aisles. *Food service aisles shall be a minimum of 36 inches (914 mm) of clear width with a preferred width of 42 inches (1067 mm) where passage of stopped wheelchairs by pedestrians is desired. Tray slides shall be mounted no higher than 34 inches (864 mm) above the floor. If self-service shelves are provided, a reasonable portion must be within the ranges shown in Figure 11B-16.*

6. Tableware areas. *Tableware, dishware, condiments, food and beverage display shelves, and dispensing devices shall comply with Section 1122B.4. See Figure 11B-17.*

7. Restrooms. *Restrooms and powder rooms shall conform to requirements in Section 1115B.*

8. Food preparation areas. *Access to food preparation areas shall comply with the provisions for entrance doors and doorways in Section ***1004, and aisles in Sections 1004.3.2.1 and 1004.3.2.2.*

1104B.6 Religious Facilities.

1104B.6.1 General. *Religious facilities shall be made accessible to persons with disabilities as provided in this section.*

> ***EXCEPTION:*** *In existing buildings, when the enforcing agency determines that compliance with any regulation under this section would create an unreasonable hardship, an exception shall be granted when equivalent facilitation is provided.*

1104B.6.2 Sanctuary. *Sanctuary areas shall be made accessible to persons with disabilities.*

1104B.6.2.1 Wheelchair *seating spaces in these areas shall conform to the requirements in Section 1104B.3.1.*

1104B.6.2.2 *Wheelchair access shall be provided to raised platforms, choir rooms, choir lofts, performing areas and other similar areas.*

> ***EXCEPTION:*** *In existing buildings, these regulations shall not apply to choir lofts when the enforcing agency determines that such compliance would create an unreasonable hardship.*

1104B.6.3 Assembly areas. *Assembly areas shall be made accessible to persons with disabilities. Enclosed and unenclosed platforms and stages in assembly areas shall conform to these requirements.*

1104B.6.4 Classrooms and offices. *Classrooms and offices shall have entry doors that conform to the requirements in Chapter 10.*

1104B.6.5 Sanitary facilities. *Sanitary facilities shall conform to the requirements in Section 1115B.*

SECTION 1105B – ACCESSIBILITY FOR GROUP B OCCUPANCIES

Group B Occupancies shall be accessible as provided in this chapter. See also the general requirements listed in Section 1114B.1.1.

** In 1104B.5 (Dining, Banquet and Bar Facilities) #8 (Food preparation areas) cross-references to 1004, 1004.3.2.1, and 1004.3.2.2 are incorrect. Cross-references should read "… doorways in Section 1133B.2.2, and aisles in Sections 1133B.6 and 1133B.7." Footnotes will be submitted for correction in Rulemaking.

EXCEPTIONS:
1. *In existing buildings, when the enforcing agency determines that compliance with any regulation under this section would create an unreasonable hardship, an exception shall be granted when equivalent facilitation is provided.*
2. *In existing buildings, the provisions of this section shall not apply when legal or physical constraints will not allow compliance with these building standards or equivalent facilitation without creating an unreasonable hardship. See Section 101.17.11, *****Item 4.*

3. *For floors and levels in new and existing buildings, see Section 1120B.*

1105B.1 General. *The provisions of this section apply to the specified types of facilities and identify specific requirements of accessibility and usability which shall be provided for each of the listed occupancy uses.*

1105B.2 Group B Occupancies. *Group B Occupancies used for assembly purposes, but having an occupant load of less than 50, shall conform to the requirements as specified in Sections 1105B, 1107B and 1110B.*

NOTE: *For floors and levels in dining, banquet and bar facilities, see Section 1120B.*

1105B.3 Office Buildings and Personal and Public Service Facilities. *Office buildings and personal and public service facilities shall conform to the provisions of this section.*

1105B.3.1 Facilities covered. *Facilities covered in this section are those that are used by the public as customers, clients, visitors or which are potentially places of employment and shall include, but not be limited to, the following requirements:*

1. *All types of general and specialized business professional offices, including those related to professional medicine or dentistry, insurance, real estate, attorneys, credit bureaus, consultants, counseling and accounting.*

2. *All types of sales establishments, including outlets for all general and special merchandise and equipment, including personal and household furnishings and supplies, foods, sporting equipment, office supplies, vehicles and related parts and supplies, building materials, and pet shops.*

3. *All personal and public service facilities, including banks, savings and loan companies, credit unions, newspaper and printing establishments, photographic studios, launder mats, cleaning and laundry outlets, veterinarian clinics and hospitals, automobile rental agencies, travel bureaus, public utility facilities, police stations and detention facilities, courtrooms and fire stations.*

1105B.3.2 Business and professional offices. *Areas to be made accessible include the following:*

1. *Client and visitor areas and office areas, together with related toilet rooms.*

2. *Conference rooms, counseling rooms or cubicles and similar areas.*

3. *Employee work areas shall have a minimum of 36 inches (914 mm) wide clear access, except as modified in other portions of these regulations. See Sections 1133B.6.1 and 1133B.6.2.*

4. *Professional medical and dental offices shall be made accessible and shall also comply with Section 1109B.*

1105B.3.3 Personal and public service facilities. *Areas to be made accessible include the following:*

1. *Client and visitor areas, office areas, and related toilet rooms shall be made accessible.*

2. *Employee work areas shall have 36 inches (914 mm) wide clear access, except as modified in other portions of these regulations. See Sections 1133B.6.1 and 1133B.6.2.*

3. *Automated teller machines used by a financial institution and its customers for the primary purposes of executing financial transactions. See Section 1117B.7.*

---

* In 1105B (Accessibility for Group B Occupancies) in Exception 2 cross-reference to Section 101.17.11, Item 4 is incorrect. Cross- reference should read Item 5. This will be submitted for correction in Rulemaking.

1105B.3.4 Public utility facilities. *Areas to be made accessible include the following:*

1. *Office areas, meeting rooms and similar areas together with related toilet rooms shall be made accessible.*

2. *Public tour areas, to the extent that such public tours are conducted through or about a facility, or where the public is permitted to walk in such areas, shall provide accessibility in those portions of the facility and grounds where this occurs.*

> ***EXCEPTIONS:***
> ***1.*** *Facilities located in operational areas which would not have any reasonable availability to or usage by persons who use wheelchairs for mobility are not subject to the wheelchair accessibility requirements of these regulations.*
>
> ***2.*** *When the enforcing agency determines that compliance with this subsection would create an unreasonable hardship, an exception to such provision shall be granted when equivalent facilitation is provided.*
>
> ***3.*** *Visitor overlook facilities, orientation areas and similar public-use areas, and any sanitary facilities that serve these facilities shall be made accessible.*
>
> ***4.*** *Where public parking is provided, spaces shall be provided for persons with disabilities as specified in Sections 1129B and 1130B.*

1105B.3.5 Police department, law enforcement, fire department facilities and courtrooms. *Areas to be made accessible include the following:*

> ***1.*** *Office areas, conference rooms, classrooms, dispatch rooms and similar areas, along with related sanitary facilities, shall be made accessible.*
>
> ***2.*** *Detention-area visitor room shall be made accessible.*
>
> ***3.*** *At least one detention cell facility with supporting sanitary facilities shall be made accessible.*
>
> ***4.*** *Courtroom areas, including the judge's chambers and bench, counsel tables, jury box, witness stand and public seating area shall be made accessible.*

1105B.3.6 Miscellaneous general standards.

1. *Circulation aisles and pedestrian ways shall be sized according to functional requirements and in no case shall be less than 36 inches (914 mm) in clear width.*

2. Storage areas. *The doorway providing access to all such areas shall not be less than 32 inches (813 mm) in clear width. Storage areas shall be made accessible in the number and dimensions provided in Section 1125B.*

SECTION 1106B – ACCESSIBILITY FOR GROUP E OCCUPANCIES

1106B.1 General. *Group E Occupancies shall be accessible as provided in this chapter. See also the general requirements listed in Section 1114B.1.1.*

> ***EXCEPTIONS:***
> ***1.*** *In existing buildings, when the enforcing agency determines that compliance with any regulation under this section would create an unreasonable hardship, an exception shall be granted when equivalent facilitation is provided.*
>
> ***2.*** *In existing buildings, where the enforcing agency determines that, because of physical constraints, compliance with these regulations or equivalent facilitation would create an unreasonable hardship, these regulations shall not apply. See Section 101.17.11, ******Item 4.*

1106B.2 Laboratory Rooms. *Laboratory rooms shall have at least one workstation and at least 5 percent of all workstations accessible to and usable by persons with disabilities.*

***** In 1106B.1 (General) in Exception 2 cross-reference to "Section 101.17.11, Item 4" is incorrect. Cross-reference should read Item 5. This will be submitted for correction in Rulemaking.

EXCEPTION: *Where the enforcing agency determines that it would create an unreasonable hardship to require compliance with these regulations for special-use rooms such as laboratory preparation rooms, supply rooms, small research laboratories, and areas containing specialized equipment not readily usable by persons with particular disabilities, such facilities need not comply with these regulations, except that a clear width of 32 inches (813 mm) shall be maintained into such rooms.*

1106B.3 Teaching Facility Cubicles, Study Carrels, etc. *Teaching facility cubicles, study carrels, etc., shall have 5 percent, but always at least one cubicle or carrel in each group (language, dental, audiovisual, typing, drafting, darkrooms, etc.) made accessible to and usable by persons with disabilities in compliance with Section 1118B, "Space Allowance and Reach Ranges" and Section 1122B, "Fixed or Built-in Seating, Tables, and Counters."*

1106B.4 Library General Use Areas.

1. General. *Library general use areas such as those housing card files, book stacks, periodicals, reading and reference areas, information desks, circulation counters, etc., shall be made accessible to persons with disabilities.*

2. Open book stacks. *Open book stacks (those available for customer use) may be of normal height, and shall have main aisles no less than 44 inches (1118 mm) in width and side, range and end aisles no less than 36 inches (914 mm) in width.*

EXCEPTIONS:
1. *In existing buildings, shelving in the amount of not more than 15 percent of the total amount of library shelving may be located on an inaccessible mezzanine area.*

2. *In existing buildings, multitiered, closed book stacks (those restricted to employee use) are exempt from these accessibility standards.*

3. Height of book shelves. *Unless an attendant is available to assist persons with disabilities, all book shelving shall be located not more than 54 inches (1372 mm) above the floor.*

4. Card catalogs. *Reach heights at card catalogs and magazine displays shall comply with Section 1118B, with a height of 48 inches (1219 mm) preferred irrespective of reach allowed.*

SECTION 1107B – FACTORIES AND WAREHOUSES

*Factories and warehouses shall conform to the provisions of this section, Section 1103B.1 and Section 1103B.1, ******Exception 2, for multistory buildings.*

EXCEPTION: *In existing buildings, when the enforcing agency determines that compliance with any regulation under this section would create an unreasonable hardship, an exception shall be granted when equivalent facilitation is provided.*

1107B.1 Factories.

1. *Major or principal floor areas shall be made accessible.*

2. *Office areas shall be made accessible.*

3. *Sanitary facilities serving these areas shall be made accessible.*

1107B.2 Warehouses.

1. *Miscellaneous warehousing areas which are located on the floor nearest grade and those areas on other floors that are otherwise provided with access by level entry, ramp or elevator shall be made accessible.*

2. *Office areas shall be made accessible.*

3. *Sanitary facilities serving these areas shall be made accessible.*

***** In 1107B (Factories and Warehouses) cross-reference to "Section 1103B.1 Exception 2 is incorrect. Cross-reference should read Exception 3. This will be submitted for correction in Rulemaking.

SECTION 1108B – ACCESSIBILITY FOR GROUP H OCCUPANCIES

1108B.1 General. *Group H Occupancies shall be accessible as provided in this chapter. See also the general requirements listed in Section 1114B.1.1.*

> ***EXCEPTIONS:***
> ***1.*** *In existing Group H Occupancies, when the enforcing agency determines that compliance with any regulation under this section would create an unreasonable hardship, an exception shall be granted when equivalent facilitation and protection are provided.*
>
> ***2.*** *In existing Group H Occupancies, the provisions of this section shall not apply when legal or physical constraints prevent compliance with these building standards or the provisions of equivalent facilitation without creating an unreasonable hardship. See Section 101.17.11,* *******Item 4.*

1108B.2 Accessible Sanitation Facilities. *Accessible sanitation facilities in all Group H Occupancies shall be provided as specified in this chapter.*

1108B.3 Accessible Routes. *Entrances, stairs, ramps, doors, turnstiles, corridors, walks and sidewalks and hazards shall provide accessibility as specified in Section 1133B.*

1108B.4 Accessible Floors and Levels. *Accessible floors and levels shall comply with the requirements specified in this chapter.*

1108B.5 Employee Work Areas. *Employee work areas shall be accessible by means of a 36 inch-minimum (914 mm) aisle width and a 32 inch-minimum (813 mm) clear opening door width, as specified in Sections 1133B.6.1 and 1133B.6.2.*

1108B.6 *Accessible facilities covered in this chapter are those that are used by the public as customers, clients, visitors or which are potential places of employment.*

SECTION 1109B – ACCESSIBILITY FOR GROUP I OCCUPANCIES

1109B.1 General. *All Group I Occupancies shall be accessible as provided in this chapter. See also the general requirements listed in Section 1114B.1.1.*

> ***EXCEPTION:*** *In existing buildings, when the enforcing agency determines that compliance with any regulation under this section would create an unreasonable hardship, an exception shall be granted when equivalent facilitation is provided.*

1109B.2 Entrance. *At least one accessible entrance shall be protected from the weather by canopy or roof overhang. Such entrances shall incorporate a passenger loading zone. Passenger loading zones shall provide an access aisle at least 60 inches (1524 mm) wide and 20 feet (6096 mm) long adjacent and parallel to the vehicle pull-up space. If there are curbs between the access aisle and the vehicle pull-up space, then a curb ramp complying with Chapter 11B shall be provided. Vehicle standing spaces and access aisles shall be level with surface slopes not exceeding 1 unit vertical in 50 units horizontal (2% slope) in all directions. Minimum vertical clearance of 114 inches (2896 mm) at accessible passenger loading zones and along vehicle access routes to such areas from site entrances shall be provided.*

> ***EXCEPTION:*** *Clinics and other medical facilities that are not intended for patient stays of 24 hours or more, and that are located above the first story of a building, and that do not have a dedicated entrance from the exterior of the building at the first story.*

***** In 1108B (Accessibility for Group H Occupancies) in Exception 2 cross-reference to Section 101.17.11, item 4 is incorrect. Cross-reference should read Item 5. This will be submitted for correction in Rulemaking.

1109B.3 Patient Bedrooms and Toilet Rooms. *Patient bedrooms and associated toilet facilities shall be made accessible as follows:*

1. *Long-term-care facilities, including skilled nursing facilities, intermediate care facilities, bed and care, and nursing homes shall have at least 50 percent of patient bedrooms and toilet rooms, and all public-use and common-use areas, accessible.*

2. *General-purpose hospitals, psychiatric facilities, and detoxification facilities shall have at least 10 percent of patient bedrooms and toilets, and all public-use and common-use areas, accessible.*

3. *Hospitals and rehabilitation facilities that specialize in treating conditions that affect mobility, or units within either that specialize in treating conditions that affect mobility, shall have all patient bedrooms and toilets and all public-use and common-use areas accessible.*

1109B.4 Patient Bedroom Areas. *Accessible patient bedrooms shall comply with the following requirements:*

1. *Each bedroom shall have a turning space measuring 60 inches (1524 mm) clear in diameter, or that is a T-shaped space complying with Figure 11B-12. In rooms with two beds, it is preferable that this space be located between beds.*

2. *Each bedroom shall have a minimum clear floor space of 36 inches (914 mm) along each side of the bed, and shall provide an accessible route to each side of the bed.*

3. *Each bedroom shall have an accessible door that complies with Section 1133B.2.*

1109B.5 Patient Toilet Rooms. *Patient toilet rooms required to be accessible shall comply with Section 1115B.*

1109B.6 Diagnostic and Treatment Areas. *Diagnostic and treatment areas and, where applicable, at least one dressing room, sanitary facility, etc., for each unit or suite, shall be made accessible.*

1109B.7 Waiting Areas, Offices and Sanitary Facilities. *Waiting areas, offices and sanitary facilities serving them shall be made accessible as covered in other portions of these standards.*

1109B.8 Office and Suites. *In buildings that house offices and suites of physicians, dentists, etc., all such offices or suites shall be made accessible, subject to other provisions of these regulations.*

SECTION 1110B – ACCESS FOR GROUP M OCCUPANCIES

1110B.1 Sales.

1110B.1.1 General areas. *General sales, display and office areas together with related toilet rooms shall be made accessible.*

1110B.1.2 Work areas. *Sales employee workstations shall be located on accessible levels, and the customer side of sales or check-out stations shall be accessible. Employee work areas shall be sized and arranged to provide access to employees in wheelchairs.*

1110B.1.3 Check stands. *In new construction, check stands, including service counters requiring a surface for transactions, shall be made accessible by providing a 36-inch (914 mm) aisle on the customer side of the check stand. Where quick check stands are provided, at least one shall be accessible. Where regular check stands are provided, the number of check stands that are accessible shall be as shown in Table 11B-2.*

TABLE 11B – 2-CHECKSTANDS

NUMBER OF REGULAR CHECKSTANDS	***NUMBER TO BE ACCESSIBLE***
1 to 4	*1*
5 to 8	*2*
9 to 15	*3*
over 15	*3 plus 20% of additional aisles*

In new and existing construction, accessible check stands shall provide a clear checkout aisle width of 36 inches (914 mm) with a maximum adjoining counter height not exceeding 38 inches (965 mm) above the finish floor. The top of the counter lip shall not exceed 40 inches (1016 mm) above the finish floor. Accessible check-stands shall always be open to customers with disabilities and shall be identified by a sign clearly visible to those in wheelchairs. The sign shall display the international symbol of accessibility in white on a blue background and shall state "This check stand to be open at all times for customers with disabilities".

In existing buildings, at least one checkout aisle shall be accessible in facilities with less than 5,000 square feet (465 m2) of selling space. In facilities of 5,000 square feet (465 m2) or more of selling space, at least one of each design of checkout aisle shall be made accessible when altered until the number of accessible checkout aisles of each design equals the number required in new construction.

> ***NOTE:*** *Examples of checkout aisles of different design include those which are specifically designed to serve different functions. Different design includes, but is not limited to, the following features: length of belt or no belt, or permanent signage designating the aisle as an express lane.*

1110B.1.4 Point-of-sale machines. *All point-of-sale machines used by customers for the primary purpose of executing transactions between the business entity and the customer shall comply with Section 1117B.7.*

1110B.1.5 Turnstiles. *See Section 1133B.2.3.4.*

1110B.1.6 Theft-prevention barriers. *Where shopping cart theft prevention barriers are used, they shall conform to the following requirements:*

1. *Each entrance and exit provided for public use shall be accessible to and usable by persons with disabilities.*

2. *Shopping cart barriers located at a public entrance or exit shall be designed to provide a clear, unobstructed opening at least 32 inches (813 mm) in width for ingress and egress of persons with disabilities.*

3. *Where gates are used, they shall open in the direction of travel, provide a clear unobstructed opening 32 inches (813 mm) in width and be maintained unlocked during business hours. Gates shall not operate a publicly audible alarm system or require more than 5 foot-pounds of force (22.2 N·m).*

4. *Where a clear unobstructed opening is provided, a level area is required on both sides of the clear opening or gate which extends a minimum of 44 inches (1118 mm) on each side of the opening and is at least 48 inches (1219 mm) in width.*

5. *Where a gate is used, the level area on both sides of the clear opening or gate shall be a minimum of 60 inches (1524 mm) in width and extend a minimum of 60 inches (1524 mm) (measured from the gate in a closed position) in the direction of the gate swing. The level area opposite the gate swing shall be a minimum of 48 inches (1219 mm) in width and extend a minimum of 42 inches (1067 mm).*

6. *Where a gate is used, the bottom of the gate shall be within 3 inches (76 mm) of the surface of the path of travel. The surface of the gate on each side shall be smooth to present no hazard to persons with disabilities using the gate and shall be structurally adequate to allow it to be opened with the wheelchair foot pedals.*

7. *The path of travel to and through the clear opening or gate shall be designed to prevent barriers from obstructing it and shall be continuously maintained unobstructed during business hours. Also, the design shall specifically prevent parked vehicles from obstructing ingress and egress.*

8. *Interior and exterior pedestrian traffic barriers (posts, rails, turnstiles, etc.) shall allow unobstructed travel for persons with disabilities through a 32-inch (813 mm) clear opening.*

1110B.1.7 Fitting and dressing rooms. *Where fitting or dressing rooms are provided for male or female customers, patients, employees, or the general public, 5 percent, but never less than one, of dressings rooms for each type of use in each cluster of dressing rooms shall be accessible.*

- *Entry doors shall conform to the requirements of Section 1133B.2 and aisles leading to such doors shall conform to Sections 1133B.6.1 and 1133B.6.2.*
- *The bottom of mirrors provided for use by persons with disabilities shall not be greater than 20 inches (508 mm) from the floor. Mirrors to be used by persons with disabilities shall be full-length, measuring at least 18 inches (457 mm) wide by 54 inches (1372 mm) high, and shall be mounted in a position affording a view to a person on the bench as well as to a person in a standing position.*
- *Clothing hooks shall be located not greater than 48 inches (1219 mm) from the floor.*
- *Every accessible dressing room shall have a 24-inch by 48-inch (610 mm by 1219 mm) bench fixed to the wall along the longer dimension. The bench shall be mounted 17 to 19 inches (432 to 483 mm) above the finish floor. Clear floor space shall be provided alongside the bench to allow a person using a wheelchair to make a parallel transfer onto the bench. The structural strength of the bench and attachments shall comply with Section 1115B.8. The minimum clear space within the room shall be 60 inches (1524 mm) in width and length. No door shall encroach into the required space.*

EXCEPTIONS:
1. *Minor specialized display areas that do not exceed 200 square feet (18.6 m2) in floor area and to which the general public is excluded need not be made accessible.*

2. *Offices in sales facilities that do not exceed 5,000 square feet (465 m2) in total area, that are located on nonaccessible levels, need not be made accessible.*

1110B.2 Miscellaneous General Standards.

1110B.2.1 Circulation. *Circulation aisles and pedestrian ways shall be sized according to functional requirements and in no case shall be less than 36 inches (914 mm) in clear width.*

1110B.2.2 Storage areas. *The doorway providing access to all such areas shall not be less than 32 inches (813 mm) in clear width. Storage areas shall be made accessible in the number and dimensions provided in Section 1125B.*

SECTION 1111B – ACCESSIBILITY FOR GROUP R OCCUPANCIES

1111B.1 General. *Group R Occupancies shall be accessible or adaptable as provided in this chapter. Public-use and common use areas serving adaptable guest and/or dwelling units shall be accessible. See also the general accessibility requirements as listed in Sections 1114B.1.1 and 1111B.*

EXCEPTION: *When the enforcing agency determines that compliance with any regulation under this section would create an unreasonable hardship, an exception shall be granted when equivalent facilitation is provided.*

1111B.2 Public and Common-use Rooms or Areas. *Public and common-use rooms and similar areas shall be made accessible to people with disabilities, subject to specific provisions contained in other portions of these regulations. See also general requirements listed in Section 1114B.1.1.*

1111B.3 Recreational Facilities. *When recreational facilities are provided, including swimming pools, they shall comply with Sections 1104B.4.3 and 1132B.2.*

1111B.4 Hotels, Motels, Inns, Dormitories, Resorts, Homeless Shelters, Halfway Houses, Transient Group Homes and Similar Places of Transient Lodging. *Hotels, motels, inns, dormitories, resorts, and similar places of transient lodging shall provide access for persons with disabilities in accordance with the provisions of the accessibility requirements of this California Building Code, except as herein provided.*

1111B.4.1 Available range of accommodations. *Accessible guest rooms or suites shall be dispersed among the various classes of sleeping accommodations to provide a range of options applicable to room sizes, costs, amenities provided, and the number of beds provided.*

1111B.4.2 Guest rooms and suites. *Places of transient lodging shall incorporate the accessibility requirements of this code as modified by this chapter in at least one guest room or dormitory room together with their sanitary facilities in conformance with Table 11B-3. All accessible sleeping rooms or suites required by Table 11B-3 shall comply with the requirements of Section 1111B.4 for hearing impaired guests.*

> ***EXCEPTION:*** *When guest rooms are being altered in an existing facility, or portion thereof, subject to the requirements of this section, at least one guest room or suite that complies with the accessibility requirements of this code as modified by this chapter shall be provided for each 25 guest rooms, or fraction thereof, of rooms being altered until the number of such rooms provided equals the number required to be accessible in Table 11B-3. In addition, at least one guest room or suite that complies with the requirements of Section 1111B.4.5 shall be provided for each 25 guest rooms, or fraction thereof, of rooms being altered until the number of such rooms equals the number required to be accessible in Table 11B-4.*

1111B.4.3 Access to beds. *Accessible sleeping rooms shall have a 36-inch (914 mm) clear width maneuvering space located along both sides of a bed, except that where two beds are provided, this requirement can be met by providing a 36-inch-wide (914 mm) maneuvering space located between the beds.*

In addition, there shall be a clear space under the bed for the use of a personal lift device. The clear space shall be on a long side of the bed adjacent to an accessible aisle. The clear space shall extend horizontally to points not more than 12 inches (305 mm) from each end of the bed, vertically not less than 7 inches (178 mm), and not less than 30 inches (762 mm) deep.

1111B.4.4 Kitchen facilities. *When accommodations are provided with kitchen units, accessible kitchens shall be provided to those accommodations required to be accessible in conformance with Table 11B-3, and shall meet the requirements of Section 1112A.*

1111B.4.5 Visual alarms, notification devices and telephones for persons with hearing impairments. *In addition to those accessible sleeping rooms and suites required by Section 1111B.4.2 to comply with this section, additional sleeping rooms and suites shall be provided with the following features in conformance with Table 11B-4 and as follows:*

1111B.4.5.1 Visual alarms. *Auxiliary visual alarms shall be provided and shall comply with Section 1114B.2.4.*

1111B.4.5.2 Visual notification devices. *Visual notification devices shall also be provided in units, sleeping rooms and suites to alert room occupants of incoming telephone calls and a door knock or bell. Notification devices shall not be connected to auxiliary visual alarm signal appliances.*

1111B.4.5.3 Telephones. *Permanently installed telephones shall have volume controls complying with Section 1117B.2.8; an accessible electrical outlet within 48 inches (1219 mm) of a telephone connection shall be provided to facilitate the use of a text telephone.*

1111B.4.6 Bathrooms in hotels, motels, inns, dormitories, resorts, homeless shelters, halfway houses, transient group homes and similar places of transient lodging. *Required accessible bathrooms for places of transient lodging shall comply with the following provisions:*

EXCEPTION: *Hotel and motel bathrooms beyond those specified in Section 1111B.4 need not comply with the provisions of this section or other accessibility provision of the California Building, Electrical, and Plumbing Codes if they provide the following features:*

1. *All bathroom fixtures are in a location that allows a person using a wheelchair measuring 30 inches by 48 inches (762 mm by 1219 mm) to touch the wheelchair to any lavatory, urinal, water closet, tub, sauna, shower stall and any other similar sanitary installation, if provided.*

2. *All bathroom entrance doors have a clear opening width of 32 inches (813 mm) and shall be either sliding doors or shall be hung to swing in the direction of egress from the bathroom.*

1. Doors. *Doors to accessible bathrooms shall comply with Section 1133B.2. Doors shall not swing into the floor space required for any fixture.*

2. Clear floor space. *All fixtures and controls shall be on an accessible route. There must be within the bathroom a clear floor space measuring 30 inches by 60 inches (762 mm by 1524 mm). The clear floor spaces at fixtures and controls, the accessible route, and the turning space may overlap.*

3. Water closets. *If a toilet stall is provided, it shall comply with Section 1115B.7.1 or 1115B.7.2, its water closet shall comply with Section 1115B of this code.*

4. Lavatory and mirrors. *If a lavatory and/or mirror is provided, it shall comply with Section 1115B.9 of this code.*

5. Controls and dispensers. *If controls, dispensers, receptacles, or other types of equipment are provided, then at least one of each shall be on an accessible route and shall comply with Section 1117B.6,"Controls and Operating Mechanisms."*

6. Bathing and shower facilities. *If tubs or showers are provided, then at least one accessible tub that complies with Section 1115B.6.1 or at least one accessible shower that complies with Section 1115B.6.2 of this code shall be provided.*

7. Toilet facilities. *Toilet facilities shall comply with Section 1111B.4.6, as modified for hotel, motel and dormitory accommodations.*

1111B.4.7 Dormitory rooms. *Dormitory rooms beyond those specified herein shall comply with the adaptability requirements of Section 1111B.5.*

1111B.5 Buildings and Complexes Containing Publicly Funded Dwelling Units.

1111B.5.1 General. *Buildings and complexes containing publicly funded dwelling units shall be accessible as required by Chapter 11A, Housing Accessibility, except that scoping requirements for covered multifamily dwellings include one or more publicly funded dwelling units, and is required to comply with Division IV. Accessibility for Existing Buildings, beginning with Section 1134B.*

*TABLE 11B-3. ADDITIONAL ACCESSIBILITY REQUIRED IN GUEST ROOMS OR SUITES**

TOTAL NUMBER OF ROOMS	FULLY ACCESSIBLE ROOMS	PLUS ADDITIONAL ACCESSIBLE ROOMS WITH ROLL-IN SHOWERS
1 to 25	0	1
26 to 50	1	1
51 to 75	3	1
76 to 100	4	1
101 to 150	5	2
151 to 200	6	2
201 to 300	7	3
301 to 400	8	4
401 to 500	9	4
501 to 1,000	2% of total	4 plus 1 for each additional 100 over 400
1,001 and over	20 plus 1 for each 100 over 1,000	

**Note: Provisions of this chapter are additional modifications to general requirements listed in Section 1114B.1.1.*

TABLE 11B-4. ADDITIONAL ACCESSIBILITY REQUIRED FOR HEARING IMPAIRED IN GUEST ROOMS*

TOTAL NUMBER OF ROOMS	NUMBER OF ROOMS EQUIPPED FOR HEARING IMPAIRED
1 to 25	*1*
26 to 50	*2*
51 to 75	*3*
76 to 104	*4*
101 to 150	*5*
151 to 200	*6*
201 to 300	*7*
301 to 400	*8*
401 to 500	*9*
501 to 1,000	*2% of total*
1,001 and over	*20 plus 1 for each 100 over 1,000*

**Note: Provisions of this chapter are additional modifications to general requirements listed in Section 1114B.1.1.*

SECTION 1112B – ACCESSIBILITY FOR GROUP S OCCUPANCIES

(Reserved for future use.)

SECTION 1113B – ACCESSIBILITY FOR GROUP U OCCUPANCIES

(Reserved for future use.)

SECTION 1114B – FACILITY ACCESSIBILITY

When buildings are required to be accessible, buildings and facilities shall be accessible as provided in this section and in those sections listed in Section 1114B.1.1.

1114B.1 Design and Construction.

1114B.1.1 General. *When accessibility is required by this chapter, it shall be designed and constructed to meet the minimum requirements of the following sections:*

Chapter 11B. Accessibility; Division I, New Buildings; Division II, Site Accessibility; Division III, Accessibility for Entrances, Exits and Paths of Travel; and Division IV, Accessibility for Existing Buildings

Entrances – ***[for HCD 1/AC] Section*** *1120A.1;* ***[for DSA/AC] Section ****1133B*

Doors – ***[for HCD 1/AC] Section*** *1120A.2;* ***[for DSA/AC] Section*** *1133B.2*

Corridors – ***[for HCD 1/AC] Section*** *1120A.3;* ***[for DSA/AC] Section*** *1133B.3*

Stairways – ***[for HCD 1/AC] Section*** *1120A.4;* ***[for DSA/AC] Section*** *1133B.4*

Ramps – ***[for HCD 1/AC] Section*** *1120A.5;* ***[for DSA/AC] Section*** *1133B.5*

Aisles – ***[for DSA/AC] Section*** *1133B.6*

Walks and Sidewalks – ***[for HCD 1/AC] Section ****1120A.7;* ***[for DSA/AC] Section*** *1133B.7*

Hazards – ***[for HCD 1/AC] Section*** *1120A.7;* ***[for DSA/AC] Section*** *1133B.8*

***** In 1114B.1.1 (General) cross-reference in "Entrances" to Section 1133B is incorrect. Cross-reference should read 1133B.1.1.
****** In 1114B.1.1 (General) cross-reference in "Walks and Sidewalks" to Section 1120A.7 is incorrect. Cross-reference should read 1120A.6.
Footnotes will be submitted for correction in Rulemaking.

*Elevators – **[for HCD 1/AC] Section** 3003*

*Special *****Wheelchair Lifts – **[for HCD 1/AC] Section** 1110A.2; **[for DSA/AC] Section** 1116B.2*

Alarms – Chapter 35.

See also Part 3, California Electrical Code.

1114B.1.2 Accessible route of travel. *When a building, or portion of a building, is required to be accessible or adaptable, an accessible route of travel shall be provided to all portions of the building, to accessible building entrances and between the building and the public way. Except within an individual dwelling unit, an accessible route of travel shall not pass though kitchens, storage rooms, restrooms, closets or other spaces used for similar purposes. At least one accessible route within the boundary of the site shall be provided from public transportation stops, accessible parking and accessible passenger loading zones, and public streets or sidewalks, to the accessible building entrance they serve. The accessible route shall, to the maximum extent feasible, coincide with the route for the general public. At least one accessible route shall connect accessible buildings, facilities, elements and spaces that are on the same site.*

At least one accessible route shall connect accessible building or facility entrances with all accessible spaces and elements and with all accessible dwelling units within the building or facility. An accessible route shall connect at least one accessible entrance of each accessible dwelling unit with those exterior and interior spaces and facilities that serve the accessible dwelling unit.

Where more than one route of travel is provided, all routes shall be accessible.

> ***EXCEPTION:*** *Where an elevator is provided for vertical access, only one elevator is required. Where more than one elevator is provided, all elevators shall be accessible.*
>
> *See Section ******1114B.1.1 for a list of code sections applicable to accessible route of travel.*

1114B.1.3 Primary entry access. *All entrances and all exterior ground-level exits shall be accessible in compliance with Section 1133B.1.1.*

1114B.1.4 Signs. *See Section 1117B.5.*

1114B.1.5 Adaptable dwelling units. *See Section 1111B.*

1114B.2 Egress and Areas for Evacuation Assistance.

1114B.2.1 [For SFM] General. *In buildings or portions of buildings required to be accessible, accessible means of egress shall be provided in the same number as required for exits by Chapter 10. When an exit required by Chapter 10 is not accessible, an area for evacuation assistance shall be provided.*

Areas for evacuation assistance shall comply with the requirements of this code and shall adjoin an accessible route of travel complying with this code.

> ***EXCEPTIONS:***
> ***1.*** *Areas of evacuation assistance are not required in buildings or facilities having a supervised automatic sprinkler system.*
>
> ***2.*** *In alterations of existing buildings, areas of evacuation assistance are not required.*

1114B.2.2 [For SFM] Areas for evacuation assistance.

1114B.2.2.1 [For SFM] Location and construction. *An area for evacuation assistance shall be one of the following:*

> ***1. [For SFM] A*** *portion of a stairway landing within a smoke proof enclosure, complying with Section 1005.3.3.*

***** In 1114B.1.1 (General) cross-reference to "Special Wheelchair Lifts" is incorrect. Cross-reference should read Special Access (Wheelchair) Lifts.
****** In 1114B.1.2 (Accessible route of travel) in the exception the cross-reference to Section 1114B.1.1 is incorrect. Cross-reference should read 1114B.1.2. Footnotes will be submitted for correction in Rulemaking.

***2. [For SFM] A** portion of an exterior exit balcony located immediately adjacent to an exit stairway when the exterior exit balcony complies with Section 1006.3. Openings to the exterior of the building located within 20 feet (6096 mm) of the area for evacuation assistance shall be protected with fire assemblies having a three-fourths-hour fire-protection rating.*

***3. [For SFM] A** portion of a one-hour fire-resistive corridor complying with Section 1004.3.4 located immediately adjacent to an exit enclosure.*

***4. [For SFM] A** vestibule located immediately adjacent to an exit enclosure and constructed to the same fire-resistive standards as required by Section 1004.3.4.*

***5. [For SFM] A** portion of a stairway landing within an exit enclosure which is vented to the exterior and is separated from the interior of the building by not less than one-hour fire-resistive door assemblies.*

***6. [For SFM] when** approved by the building official, an area or room, which is separated from other portions of the building by a smoke barrier. Smoke barriers shall have a fire-resistive rating of not less than one hour and shall completely enclose the area or room. Doors in the smoke barrier shall be tight fitting smoke- and draft-control assemblies having a fire-protection rating of not less than 20 minutes and shall be self-closing or automatic closing. The area or room shall be provided with an exit directly to an exit enclosure. When the room or area exits into an exit enclosure which is required to be of more than one-hour fire-resistive construction, the room or area shall have the same fire-resistive construction, including the same opening protection, as required for the adjacent exit enclosure.*

***7. [For SFM] An** elevator lobby complying with Section 1114B.2.3.*

***1114B.2.2.2 [For SFM] Size.** Each area for evacuation assistance shall provide at least two accessible areas that are not less than 30 inches by 48 inches (762 mm by 1219 mm). The area for evacuation assistance shall not encroach on any required exit width. The total number of such 30-inch by 48-inch (762 mm by 1219 mm) areas per story shall not be less than one for every 200 persons of calculated occupant load served by the area for evacuation assistance.*

***EXCEPTION:** The building official may reduce the minimum number of 30-inch by 48-inch (762 mm by 1219 mm) areas to one for each area for evacuation assistance on floors where the occupant load is less than 200.*

***1114B.2.2.3 [For SFM] Adjacent stairway width.** Each stairway adjacent to an area for evacuation assistance shall have a minimum clear width of 48 inches (1219 mm) between handrails.*

1114B.2.2.4 [For SFM] Two-way communication.

***1114B.2.2.4.1 [For SFM] A** telephone with controlled access to a public telephone system or another method of two-way communication shall be provided between each area of refuge and the primary entry. The fire department may approve a location other than the primary entry.*

***1114B.2.2.4.2 [For DSA/AC] A** method of two-way communication with both visible and audible communication shall be provided between each area of evacuation assistance and the primary entry. A button in the area of rescue assistance shall activate both a light in the area of rescue assistance indicating that rescue has been requested and a light at the primary entry indicating that rescue is being requested. A button at the primary entry shall activate both a light at the primary entry and a light in the area of rescue assistance indicating that the request has been received.*

A telephone with controlled access to a public telephone system or another method of two-way communication shall be provided between each area of refuge and the primary entry. The fire department may approve a location other than the primary entry.

1114B.2.2.5 [For SFM] Identification. *Each area for evacuation assistance shall be identified by a sign which states AREA FOR EVACUATION ASSISTANCE and the international symbol of accessibility. The sign shall be illuminated when exit sign illumination is required. In each area for evacuation assistance, instructions on the use of the area under emergency conditions shall be posted adjoining the two-way communication system.*

1114B.2.3 [For SFM] Area for evacuation assistance, high rise alternative. *Within a building of any height or occupancy constructed in accordance with the requirements of Sections 403.1 through 403.10, an area for evacuation assistance may be located in the elevator lobby when:*

> ***1.*** *The area for evacuation assistance complies with the requirements for size, two-way communication and identification as specified in Section 1114B.2.2; and*
>
> ***2.*** *Elevator shafts and adjacent lobbies are pressurized as required for smoke-proof enclosures in Section 1005.3.3. Such pressurization system shall be activated by smoke detectors on each floor located in a manner approved by the building official. Pressurization equipment and its ductwork within the building shall be separated from other portions of the building by a minimum two-hour fire-resistive construction.*

1114B.2.4 [For SFM] Alarms/emergency warning systems/accessibility. *If emergency warning systems are required, they shall activate a means of warning the hearing impaired. Emergency warning systems as part of the fire-alarm system shall be designed and installed in accordance with NFPA 72 as amended in Chapter 35.*

SECTION 1115B – BATHING AND TOILET FACILITIES

1115B.1 General. *Sanitary facilities that serve buildings, facilities or portions of buildings or facilities that are required by these standards to be accessible to persons with disabilities, shall conform to the following requirements, except as specifically exempted in other portions of this code.*

> ***NOTE:*** *See Section 1111B.4.6 and Chapter 11A for bathrooms in residential occupancies.*
>
> ***EXCEPTION:*** *In existing buildings or facilities, when the enforcing agency determines that compliance with any building standard under this section would create an unreasonable hardship, an exception to such standard shall be granted when equivalent facilitation is provided. When equivalent facilitation is used, the following criteria shall apply:*
>
> ***1.*** *All sanitary facilities are not required to comply with these building standards when the enforcing agency determines that sanitary facilities are accessible to and usable by persons with disabilities within a reasonable distance of accessible areas.*
>
> ***2.*** *Equivalent facilitation would require doors to have a clear, unobstructed opening of at least 30 inches (762 mm).*

1115B.2 Toilet Facilities. *Where separate facilities are provided for nondisabled persons of each sex, separate facilities shall be provided for persons with disabilities of each sex also. Where unisex facilities are provided for persons without disabilities, at least one unisex facility shall be provided for persons with disabilities within close proximity to the nonaccessible facility. (See Figure 11B-1A.)*

1115B.2.1 Accessible water closets.

1. *The height of accessible water closets shall be a minimum of 17 inches (432 mm) and a maximum of 19 inches (483 mm) measured to the top of a maximum 2-inch high (51 mm) toilet seat.*

> ***EXCEPTION:*** *A 3-inch (76 mm) high seat shall be permitted only in alterations where the existing fixture is less than 15 inches (381 mm) high.*

2. *Controls shall be operable with one hand and shall not require tight grasping, pinching or twisting. Controls for the flush valves shall be mounted on the wide side of toilet areas, no more than 44 inches (1118 mm) above the floor. The force required to activate controls shall be no greater than 5-pound-force (lbf) (22.2 N).*

NOTES:

1. *See the California Building Code, Chapter 11A*, for additional requirements for water closets in publicly funded housing and all nonresidential occupancies.*

2. *Automatic "spring to lifted position" seats are not allowed.*

1115B.2.1.1 Accessible urinals.

1115B.2.1.1.1 Urinals *shall be floor mounted or wall hung. Where one or more wall hung urinals are provide, at least one with a rim projecting a minimum of 14 inches (356 mm) from the wall and a maximum of 17 inches (432 mm) from the wall and a maximum of 17 inches (432 mm) above the floor shall be provided.*

1115B.2.1.1.2 Flush *controls shall be operable with one hand and shall not require tight grasping, pinching or twisting of the wrist and shall be mounted no more than 44 inches (1118 mm) above the floor. The force required to activate controls shall be no greater than 5 lbf (22.2 N). Electronic automatic flushing controls are acceptable and preferable.*

1115B.2.1.2 Accessible lavatories.

1115B.2.1.2.1 Faucet *controls and operating mechanisms shall be operable with one hand in accordance with Chapter 11B of the California Building Code and shall not require tight grasping, pinching or twisting of the wrist. The force required to activate controls shall be no greater than 5 lbf (22.2 N). Lever-operated, push-type and electronically controlled mechanisms (preferable) are examples of acceptable designs. Self-closing valves are allowed if the faucet remains open for at least 10 seconds.*

Lavatories, when located adjacent to a side wall or partition, shall be a minimum of 18 inches (457 mm) to the centerline of the fixture. All lavatories that are designated to be accessible shall be mounted with the rim or counter edge no higher than 34 inches (864 mm) above the finished floor and with vertical clearance measured from the bottom of the apron or the outside bottom edge of the lavatory of 29 inches (737 mm) reducing to 27 inches (686 mm) at a point located 8 inches (203 mm) back from the front edge.

Knee clearance below the lavatory shall extend a minimum of 30 inches (762 mm) in width by 17 inches (432 mm) in depth. See Figure 11B-1D--Knee Clearance.

1115B.2.1.2.2 Hot *water and drainpipes accessible under lavatories shall be insulated or otherwise covered. There shall be no sharp or abrasive surfaces under lavatories.*

1115B.2.1.3 Accessible showers.

1115B.2.1.3.1 Water *controls of a single-lever design shall be located on a sidewall **opposite the seat and operable with a maximum force of 5-lbf (22.2 N). The controls shall be located 40 inches (1016 mm) [plus or minus 1 inch (25 mm) tolerance] above the shower floor.*

1115B.2.1.3.2 A *flexible handheld shower unit with a hose at least 60 inches (1524 mm) long shall be provided with head mounting height of 48 inches (1219 mm) [plus or minus 1-inch (25 mm) tolerance] maximum above the shower floor.*

1115B.2.1.3.3 Where *shower facilities for persons with disabilities are provided in areas subject to excessive vandalism, in lieu of providing the fixed flexible hose and handheld showerhead required above two wall-mounted showerheads shall be installed. Each showerhead shall be controlled so that it can be operated independently of the other and shall have swivel angle adjustment, both vertically and horizontally. One showerhead shall be located at a height of ***40 inches (1016 mm) [plus or minus 1 inch (25 mm) tolerance] above the floor.*

---

* In 1115B.2.1 (Accessible water closets) the cross-reference to Chapter 11A is incomplete. Cross–reference should read Chapter 11A, Section 1109A.3.

****** In 1115B.2.1.3.1 (under Accessible showers) the cross-reference to "Water controls … "opposite" the seat, the word "opposite" is incorrect. The correct word should read "adjacent" to be consistent with 1115B.6.2.4.1.

*** In 1115B.2.1.3.3 the cross-reference to the "40 inches" is incorrect. Cross-reference should read 48-inches (1219 mm). Footnotes will be submitted for correction in Rulemaking.

***1115B.2.1.3.4 Where**, within the same functional area, two or more showers are provided for people with disabilities, there shall be at least one shower constructed opposite hand from the other or others (i.e., one with left-hand controls versus right-hand controls.*

***NOTE:** See the California Building Code, Chapter 11B, for showers in living accommodations.*

***1115B.2.1.4 Accessible bathtubs.** Bathtubs shall be provided with a shower spray unit having a hose at least 60 inches (1524 mm) long that can be used as a shower. Bathtub enclosures, if pro-vided, shall not obstruct controls or transfer from wheelchair onto bathtub seats or into tubs. Enclosures on bathtubs shall not have tracks mounted on their rims.*

***NOTE:** See the California Building Code, Chapter 11B, for bathtubs in living accommodations.*

1115B.2.1.5 Accessible drinking fountains.

***1115B.2.1.5.1 The** drinking fountain shall be a minimum of 18 inches (457 mm) in depth and there shall be clear and unobstructed knee space under the drinking fountain not less than 27 inches (686 mm) in height and 8 inches (203 mm) in depth, the depth measurements being taken from the front edge of the fountain. Additionally, there shall be toe clearance of 9 inches (229 mm) in height above the floor and 17 inches (432 mm) in height above the floor and 17 inches (432 mm) in depth from the front edge of the fountain. A side approach drinking fountain is not acceptable.*

***1115B.2.1.5.2 If** provided in covered multifamily buildings, drinking fountains and water coolers shall be on an accessible route. Wall-mounted and post-mounted cantilevered drinking fountains and water coolers shall have a clear knee space a minimum of 30 inches (762 mm) in width and shall also have a minimum clear floor space 30 inches by 48 inches (762 mm by 1219 mm) to allow a person in a wheelchair to approach the unit facing forward.*

***1115B.2.1.5.3** The bubbler shall be activated by a manually operated system not requiring a force greater than 5 lbf (22.2 N) that is located within 6 inches (152 mm) of the front edge of the fountain or an electronically controlled device (preferably). The bubbler outlet orifice shall be located within 6 inches (152 mm) of the front edge of the drinking fountain and within 36 inches (914 mm) of the floor. The water steam from the bubbler shall be substantially parallel to the front edge of the drinking fountain.*

***1115B.2.1.5.4 The** spout shall provide a flow of water at least 4 inches (102 mm) high so as to allow the insertion of a cup or glass under the flow of water. The force required to activate controls shall be no greater than 5 lbf (22.2 N).*

1115B.2.1.6 Accessible sinks.

***1115B.2.1.6.1 Accessible kitchen sinks.** Faucet controls and operating mechanisms shall be operable with one hand and shall not require tight grasping, pinching or twisting of the wrist. The force required to activate controls shall be not greater than 5 lbf (22.2 N). Lever-operated controls shall be ***greater than 5 pound-force (lbf) (22.2 N). Lever-operated, push-type and electronically controlled mechanisms are examples of acceptable designs. Self-closing valves are allowed if the faucet remains open for at least 10 seconds.*

***1115B.2.1.6.2 Noncommercial kitchen and counter bar sinks.** Kitchen and counter bar sinks located in common use areas shall have faucet controls and operating mechanisms operable with one hand in accordance with Chapter 11B of the California Building Code and shall not require grasping, pinching or twisting of the wrist. The force required to activate controls shall be no greater than 5 lbf (22.2 N). Lever-operated, push-type and electronically controlled mechanisms are examples of acceptable designs.*

---

* In 1115B.2.1.3.4 the cross-referenced Note is incorrect as one is already in the section for 'showers in living accommodations.' Cross-referenced Note should be deleted.

** In 1115B.2.4 the cross-referenced Note is incorrect as one is already in the section for 'accessible bathtubs.' Cross-referenced Note should be deleted.

*** In 1115B.2.1.6.1 (Accessible kitchen sinks) the 3rd sentence is incorrect. To be consistent with the 2nd sentence of this section and section 1112A.3 the 3rd sentence should read: "Lever-operated controls shall be no greater than 5 pounds-force (lbf) (22.2 N)." Footnotes will be submitted for correction in Rulemaking.

***NOTE:** See the California Building Code, Chapter 11B.*

**This diagram illustrates the specific requirements of the regulations and is intended only as an aid for building and construction.*

***1115B.3 Where Used by Children.** Where facilities are to be used solely by small children, the specific heights may be adjusted to meet their accessibility needs. See Table 1115B-1 for suggested mounting heights.*

***1115B.4 Passageways.** Passageways leading to sanitary facilities shall have a clear access. All doorways leading to such sanitary facilities shall have:*

***1115B.4.1 Clear opening.** A clear unobstructed opening width of 32 inches (813 mm).*

***1115B.4.2 Level area.** A level and clear area for a minimum depth of 60 inches (1524 mm) in the direction of the door swing as measured at right angles to the plane of the door in its closed position, and 44 inches (1118 mm) where the door swings away from the level and clear area. The width of the level area on the side to which the door swings shall extend 24 inches (610 mm) past the strike edge of the door for exterior doors and 18 inches (457 mm) past the strike edge for interior doors.*

***1115B.5 Identification Symbols.** Doorways leading to men's sanitary facilities shall be identified by an equilateral triangle 1/4 inch thick (6.4 mm) with edges 12 inches (305 mm) long and a vertex pointing upward. Women's sanitary facilities shall be identified by a circle, 1/4 inch thick (6.4mm) and 12 inches (305 mm) in diameter. Unisex sanitary facilities shall be identified by a circle 1/4 inch thick (6.4 mm), 12 inches (305 mm) in diameter with a 1/4-inch thick (6.4 mm) triangle superimposed on the circle and within the 12-inch (305 mm) diameter. These geometric symbols shall be centered on the door at a height of 60 inches (1524 mm) and their color and contrast shall be distinctly different from the color and contrast of the door.*

***NOTE:** See also Section **1117B.5.7 for additional signage requirements applicable to sanitary facilities.*

***1115B.6 Bathing Facilities.** Where facilities for bathing are provided for the public, clients or employees, including showers, bathtubs or lockers, at least one such facility, and not less than 1 percent of all facilities, shall conform to the following standards unless specifically exempted by other portions of these regulations.*

***1115B.6.1 Bathtubs.** Bathtubs required to be accessible shall comply with this section.*

***1. Floor space.** Clear floor space at bathtubs shall be as shown in Figure 11B-8.*

***2. Seat.** An in-tub seat or a seat at the head end of the tub shall be provided as shown in Figures 11B-8 and 11B-9B. The structural strength of seats and their attachments shall comply with Section 1115B.8.3. Seats shall be mounted securely and shall not slip during use.*

***3. Grab bars.** Grab bars complying with Sections 1115B.8.2, 1115B.8.3 and 1115B.8.4 shall be provided as shown in Figures 11B-9A and 11B-9B.*

***4. Controls.** Faucets and other controls shall be located as shown in Figure 11B-9B. They shall be operable with one hand and shall not require tight grasping, pinching or twisting of the wrist. The force required to activate controls shall be no greater than 5 pounds (22.2 N).*

***5. Shower unit.** A shower spray unit with a hose at least 60 inches (1524 mm) long that can be used both as a fixed shower head and as a hand-held shower shall be provided.*

***6. Bathtub enclosures.** If provided, enclosures for bathtubs shall not obstruct controls or transfer from wheelchairs onto bathtub seats or into tubs. Enclosures on bathtubs shall not have tracks mounted on their rims.*

---

* In 1115B.2.1.6.2 (Noncommercial kitchen and counter bar sinks) the cross-referenced note is incorrect. The cross-reference to Note should be deleted. Also cross-reference to 'This diagram' in the 2nd paragraph is incorrect. The cross-reference should be corrected in the 2nd paragraph to read "Diagram 11B-D ~~This diagram~~ illustrates the specific …"

** In 1115B.5 (Identification Symbols) the cross-reference to 1117B.5.7 is incorrect. Cross-reference should read 1117B.5.1 Item 2. Footnotes will be submitted for correction in Rulemaking.

1115B.6.2 Showers. *Showers shall conform to the following requirements.*

1115B.6.2.1 Size. *Showers shall be 60 inches (1524 mm) minimum in width between wall surfaces and 30 inches (762 mm) minimum in depth with a full opening width on the long side, or 42 inches (1067 mm) in width between wall surfaces and 48 inches (1219 mm) minimum in depth with an entrance opening of 42 inches (1067 mm). As an alternative, showers 60 inches (1524 mm) minimum in width may be 36 inches (914 mm) minimum in depth as long as the entrance opening width is a minimum 36 inches (914 mm).*

1115B.6.2.2 Thresholds. *When a threshold or recessed drop is permitted, it shall be a maximum of 1/2 inch (13 mm) in height and shall be beveled or sloped at an angle not exceeding 45 degrees (100 percent gradient) from the horizontal.*

1115B.6.2.3 Where*, within the same functional area, two or more accessible showers are provided, there shall be at least one shower constructed opposite hand from the other or others (i.e., one left-hand controls versus right-hand controls).*

1115B.6.2.4 Accessories. *Shower accessories shall include:*

1115B.6.2.4.1 Water controls. *Water controls of a single-lever design shall be located on the side wall of the compartment adjacent to the seat and operable with a maximum force of 5 lb (22.2N) mounted at 40 inches (1016 mm) [plus or minus 1 inch (25 mm) tolerance] above the shower floor, and the centerline of the controls shall be within a reach range of no less than 18 inches (457 mm) and no more than 24 inches (610 mm) from the rear edge of the seat.*

1115B.6.2.4.2 Hand-held sprayer unit. *A flexible handheld sprayer unit with a hose at least 60 inches (1524 mm) long shall be provided within reach range of the seat at a distance not to exceed 27 inches (686 mm) horizontally measured from the rear seat edge to the centerline of the mounting bracket. This unit shall be mounted at a maximum height of 48 inches (1219 mm) [plus or minus 1 inch (25 mm) tolerance] above the shower floor.*

1115B.6.2.4.3 Sprayer unit alternative. *Except within guest rooms and suites in hotels, motels and similar transient lodging establishments where accessible shower facilities are provided in areas subject to excessive vandalism, in lieu of providing the fixed flexible hose, two wall mounted shower heads shall be installed. Each shower head shall be installed so that it can be operated independently of the other and shall have swivel angle adjustments, both vertically and horizontally. One shower head shall be located at a height of 48 inches (1219 mm) [plus or minus 1 inch (25 mm) tolerance] above the floor.*

1115B.6.2.4.4 Floor slope. *The maximum slope of the floor shall be 2 percent per foot in any direction. Where drains are provided, grate openings shall be a minimum of 1/4 inch (6.4 mm) and located flush with the floor surface.*

1115B.6.2.4.5 Shower fixtures. *Shower accessories shall include:*

> ***1.*** *A folding seat located within 27 inches (686 mm) of the controls mounted 18 inches (457 mm) above the floor, and with a minimum space of 1 inch (25 mm) and maximum space of 1-½ inches (38 mm) allowed between the edge of the seat and any wall. When folded, the seat shall not extend more than 6 inches (152 mm) from the mounting wall. See Figures 11B-2A, 11B-2B, 11B-2C and 11B-2D.*
>
> ***2.*** *Grab bars located on walls adjacent to and opposite the seat. Grab bars also comply with the diameter, loading and projection requirements of Sections 1115B.8.2, 1115B.8.3 and 1115B.8.4. Grab bars shall be mounted between a minimum of 33 inches (838 mm) and a maximum of 36 inches (914 mm) above the shower floor with an L-shaped grab bar mounted on walls opposite and adjacent to the front edge of the seat, but not extended to include that portion of wall over the seat. See Figure 11B-2A or 11B-2B.*

1115B.6.2.4.6 Soap dish. *When a soap dish is provided, it shall be located on the control wall at a maximum height of 40 inches (1016 mm) above the shower floor, and within reach limits from the seat.*

1115B.6.2.5 Enclosures. *Enclosures, when provided for shower stalls, shall not obstruct transfer from wheelchairs onto shower seats.*

> ***NOTE:*** *See Figures 11B-2A, 11B-2B, 11B-2C and 11B-2D.*

1115B.6.3 Open showers. *Where no separate shower compartments are provided, the shower for persons with disabilities shall be located in a corner with L-shaped grab bars extending along two adjacent walls with a folding seat adjacent to the shower controls. See Figures 11B-2A, 11B-2B, 11B-2C and 11B-2D.*

1115B.6.4 Lockers. *Where lockers are provided for the public, clients, employees, members or participants, at least one locker and not less than 1 percent of all lockers shall be made accessible to persons with disabilities. A path of travel not less than 36 inches (914 mm) in clear width shall be provided to these lockers.*

1115B.7 Toilet Facilities.

1115B.7.1 Multiple-accommodation toilet facilities. *Multiple-accommodation toilet facilities shall have the following:*

NOTE: *See definition in Chapter 2.*

1. Wheelchair clearance. *A clear space measured from the floor to a height of 27 inches (686 mm) above the floor, within the sanitary facility room, of sufficient size to inscribe a circle with a diameter not less than 60 inches (1524 mm), or a clear space 56 inches by 63 inches (1422 mm by 1600 mm) in size. Other than the door to the accessible water closet compartment, a door, in any position, may encroach into this space by not more than 12 inches (305 mm).*

2. Clear space at fixtures. *Doors shall not swing into the floor space required for any fixture.*

3. Accessible water closet compartment. *A water closet fixture located in a compartment shall provide a minimum 28 inch wide (711 mm) clear space from a fixture or a minimum 32 inch-wide (813 mm) clear space from a wall at one side of the water closet. The other side of the water closet shall provide 18 inches (457 mm) from the centerline of the water closet to the wall. The stall shall be a minimum of 60-inches (1524 mm) wide. A minimum 48-inch-long (1219 mm) clear space shall be provided in front of the water closet if the compartment has an end-opening door (facing the water closet). A minimum 60 inch-long (1524 mm) clear space shall be provided in a compartment with the door located at the side. Grab bars shall not project more than 3 inches (76 mm) into the clear spaces as specified above.*

4. Compartment doors. *Water closet compartment shall be equipped with a door that has an automatic-closing device, and shall have a clear, unobstructed opening width of 32 inches (813 mm) when located at the end and 34 inches (864 mm) when located at the side with the door positioned at an angle of 90 degrees from its closed position. When standard compartment doors are used, with a minimum 9-inch (229 mm) clearance for footrests underneath and a self-closing device, clearance at the strike edge as specified in Section 1133B.2.4.3 is not required.*

The inside and outside of the compartment door shall be equipped with a loop or U-shaped handle immediately below the latch. The latch shall be flip-over style, sliding, or other hardware not requiring the user to grasp or twist. Except for door-opening widths and door swings, a clear, unobstructed access of not less than 44 inches (1118 mm) shall be provided to water closet compartments designed for use by persons with disabilities and the space immediately in front of a water closet compartment shall not be less than 48 inches (1219 mm) as measured at right angles to compartment door in its closed position.

5. Large toilet rooms. *Where six or more stalls are provided within a multiple-accommodation toilet room, at least one stall shall comply with Items 2 and 3, and at least one additional stall shall be 36 inches (914 mm) wide with an outward swinging self closing door and parallel grab bars complying with Sections 1115B.8.2, 1115B.8.3 and 1115B.8.4.*

1115B.7.2 Single-accommodation toilet facilities. *There shall be sufficient space in the toilet room for a wheelchair measuring 30 inches (762 mm) wide by 48 inches (1219 mm) long to enter the room and permit the door to close. There shall be in the room a clear floor space of at least 60 inches (1524 mm) in diameter, or a T-shaped space complying with Figure 11B-12 (a) and (b). No door shall encroach into this space for more than 12 inches (305 mm) except for the panel door to any water closet compartment if there is one. (See Figure 11B-1A). The water closet shall be located in a space which provides a minimum 28-inch-wide (711 mm) clear space from a fixture or a minimum 32-inch-wide (813 mm) clear space from a wall at one side. The other side shall provide 18 inches (457 mm) from the centerline of the water closet to the wall.*

A minimum 48 inches (1219 mm) of clear space shall be provided in front of the water closet. All doors, fixtures and controls shall be on an accessible route. The minimum clear width of an accessible route shall be 36 inches (914 mm) except at doors (see Section 1133B.2). If a person in a wheelchair must make a turn around an obstruction, the minimum clear width of the accessible route shall be as shown in Figure 11B-5E. (See also Figure 11B-1A.)

NOTE: *For bathrooms serving residential occupancies, see Section 1111B.4.6 and Chapter 11A.*

EXCEPTION: *In an existing building, a single-accommodation toilet facility may have the water closet fixture located in an area which provides a clear space of not less than 36 inches (914 mm) wide by 48 inches (1219 mm) long in front of the water closet.*

1115B.8 Grab Bars.

1115B.8.1 Location. *Grab bars located on each side, or one side and the back of the accessible toilet stall or compartment, shall be securely attached 33 inches (838 mm) above and parallel to the floor, except that where a tank-type toilet is used which obstructs placement at 33 inches (838 mm), the grab bar may be as high as 36 inches (914 mm). Grab bars shall be at least 42 inches (1067 mm) long with the front end positioned 24 inches (610 mm) in front of the water closet stool. Grab bars at the back shall not be less than 36 inches (914 mm) long. See Figures 11B-1A, 11B-1B and 11B-1C.*

1115B.8.2 Diameter or width. *The diameter or width of the gripping surfaces of a grab bar shall be 1-¼ inches to 1-½ inches (32 mm to 38 mm) or the shape shall provide an equivalent gripping surface. If grab bars are mounted adjacent to a wall, the space between the wall and the grab bars shall be 1-½ inches (38 mm). See Figure 11B-1C.*

1115B.8.3 Structural strength. *The structural strength of grab bars, tub and shower seats, fasteners, and mounting devices shall meet the following specifications:*

1. *Bending stress in a grab bar or seat induced by the maximum bending moment from the application of a 250-pound (1112 N) point load shall be less than the allowable stress for the material of the grab bar or seat.*

2. *Shear stress induced in a grab bar or seat by the application of a 250-pound (1112N) point load shall be less than the allowable shear stress for the material of the grab bar or seat, and its mounting bracket or other support is considered to be fully restrained, then direct and torsional shear stresses shall not exceed the allowable shear stress.*

3. *Shear force induced in fastener or mounting device from the application of a 250-pound (1112 N) point load shall be less than the allowable lateral load of either the fastener or mounting device or the supporting structure, whichever is the smaller allowable load.*

4. *Tensile force induced in a fastener by a direct tension force of a 250-pound (1112 N) point load, plus the maximum moment from the application of a 250-pound (1112 N) point load, shall be less than the allowable withdrawal load between the fastener and supporting structure.*

5. *Grab bars shall not rotate within their fittings.*

1115B.8.4 Surface. *A grab bar and any wall or other surface adjacent to it shall be free of any sharp or abrasive elements. Edges shall have a minimum radius of 1/8 inch (3.2 mm).*

1115B.9 Toilet Room Fixtures and Accessories.

1115B.9.1 Lavatory fixtures. *The requirements of this subsection shall apply to lavatory fixtures, vanities and built-in lavatories.*

1. *A clear floor space 30 inches by 48 inches (762 mm by 1219 mm) complying with Section 1118B.4 shall be provided in front of a lavatory to allow a forward approach. Such clear floor space shall adjoin or overlap an accessible route and shall extend into knee and toe space underneath the lavatory.*

2. *Mirrors shall be mounted with the bottom edge no higher than 40 inches (1016 mm) from the floor.*

1115B.9.2 Towel, sanitary napkins, waste receptacles. *Where towel, sanitary napkins, waste receptacles, and other similar dispensing and disposal fixtures are provided, at least one of each type shall be located with all operable parts, including coin slots, within 40 inches (1016 mm) from the finished floor.*

1115B.9.3 Toilet tissue dispensers. *Toilet tissue dispensers shall be located on the wall within 12 inches (305 mm) of the front edge of the toilet seat. Dispensers that control delivery or that do not permit continuous paper flow shall not be used. See Figure 11B-1A.*

1115B.9.4 Urinals. *Where urinals are provided, at least one shall have a clear floor space 30 inches by 48 inches (762 mm by 1219 mm) in front of the urinal to allow forward approach. This clear space shall comply with Section 1118B.4.*

1115B.9.5 Interior surfaces. *In other than dwelling units, toilet room floors shall have a smooth, hard, nonabsorbent surface such as Portland cement, concrete, ceramic tile or other approved material which extends upward onto the walls at least 5 inches (127 mm). Walls within water closet compartments and walls within 24 inches (610 mm) of the front and sides of urinals shall be similarly finished to a height of 48 inches (1219 mm) and, except for structural elements, the materials used in such walls shall be a type which is not adversely affected by moisture.*

1115B.9.6 Shower areas. *Showers in all occupancies shall be finished as specified in Section 1115B.9.5 to a height of not less than 70 inches (1778 mm) above the drain inlet. Materials other than structural elements used in such walls shall be of a type which is not adversely affected by moisture.*

1115B.9.7 Doors and panels. *Doors and panels of shower and bathtub enclosures shall be substantially constructed from approved, shatter-resistant materials. Hinged shower doors shall open outward.*

1115B.9.8 Glazing for shower and bathtub enclosures. *Glazing used in doors and panels of shower and bathtub enclosures shall be fully tempered, laminated safety glass or approved plastic. When glass is used, it shall have minimum thickness of not less than 1/8 inch (3.2 mm) when fully tempered, or 1/4 inch (6.4 mm) when laminated, and shall pass the test requirements of UBC Standard 24-2.*

1115B.9.9 Plastics. *Plastics used in doors and panels of showers and bathtub enclosures shall be of a shatter-resistant type.*

TABLE 1115B-1 – SUGGESTED DIMENSIONS FOR CHILDREN'S USE

*The Division of the State Architect, *Office of Regulation Services recommends the following dimensions as adequately serving the needs of children in projects under our jurisdiction. These recommendations are based on the federal "Recommendations for Accessibility for Children in Elementary School" and other recognized publications on access for children:*
A = Adult Dimensions (age 12 and over)
E = Elementary Dimensions
K = Kindergarten and Pre-school Dimensions

		SUGGESTED	
DIMENSION	**A (Inches)**	**E (Inches)**	**K (Inches)**
Toilet centering from wall	18	15	12
Toilet seat height/Dimensions to top of seat	17-19	15	10-12
Grab bar height (side)	33	27	20-22
Toilet paper in front of toilet	12 max.	6 max.	6 max.
Napkin disposal in front of toilet	12 max.	12 max.	N/A
Dispenser or mirror height.	40 max	36 max	32 max
Lavatory/sink top height...	34 max	29 max	24 max
Lavatory/sink knee clearance	27 min.	24 min.	19 min.
Urinal lip height...	17 max	15 max	13 min
Urinal flush handle height..	44 max.	37 max	32 max
Drinking fountain bubbler height..	36 max	32 max	30 max
Drinking fountain knee clearance.	27 min	24 min.	22 min
Ramp/stair handrail height	34-38	27	22

* In Table 1115B-1 (Suggested Dimensions for Children's Use) the cross-reference to the Division of the State Architect, "Office of Regulations Services is incorrect. To correct cross-reference Office of Regulation Services should read Access Compliance. This will be submitted for correction in Rulemaking.

SECTION 1116B – ELEVATORS AND SPECIAL ACCESS (WHEELCHAIR) LIFTS

1116B.1 Elevators. *Elevators shall be accessible. Elevators required to be accessible shall be designed and constructed to comply with this section.*

1116B.1.1 General. *Size of cab and control locations and requirements for accommodation of people with disabilities.*

In buildings two or more stories in height, served by an elevator, or a building served by an elevator required by Chapter 11B, or a building served by an elevator required for accessibility by Section 101.17, all elevators provided shall accommodate a wheelchair.

> ***EXCEPTIONS:***
> ***1.*** *When the enforcing agency determines that compliance with any regulation under this section would create an unreasonable hardship, an exception to such regulation shall be granted when equivalent facilitation is provided, and where it can be demonstrated that a person using a wheelchair can enter and operate the elevator.*
>
> ***2.*** *These provisions shall not apply to existing buildings when legal or physical constraints will not allow compliance with these regulations or equivalent facilitation without creating an unreasonable hardship. See Section 101.17.*

1116B.1.2 Operation and leveling. *The elevator shall be automatic and provided with a self-leveling feature that will automatically bring the car to the floor landings within a tolerance of plus or minus 1/2 inch (12.7 mm) under normal loading and unloading conditions. This self-leveling shall, within its zone, be entirely automatic and independent of the operating device and shall correct the overtravel or undertravel. The car shall also be maintained approximately level with the landing, irrespective of load.*

The clearance between the car platform sill and the edge of the hoistway landing shall be no greater than 1-¼ inches (32 mm).

1116B.1.3 Door operation. *Power-operated horizontally sliding car and hoistway doors opened and closed by automatic means shall be provided.*

1116B.1.4 Door size. *Minimum clear width for elevator doors shall be 36 inches (914 mm).*

> ***EXCEPTION:*** *When approved by the building official, the minimum door width may be reduced to 32 inches (813 mm) for a car with dimensions as permitted by the exception to Section *****1116B.1.6.*

1116B.1.5 Door protective and reopening device. *Doors closed by automatic means shall be provided with a door-reopening device that will function to stop and reopen a car door and adjacent hoistway door in case the car door is obstructed while closing.*

This reopening device shall also be capable of sensing an object or person in the path of a closing door without requiring contact for activation at a nominal 5 inches and 29 inches (127 mm and 737 mm) above the floor.

Door-reopening devices shall remain effective for a period of not less than 20 seconds.

After such an interval, the doors may close in accordance with the requirements of ANSI 17.1-86, the American Society of Mechanical Engineers (ASME) document ASME 17.1-1990.

1116B.1.6 Hall call. *The minimum acceptable time from notification that a car is answering a call (lantern and audible signal) until the doors of the car start to close shall be calculated by the following equation:*

$$T = D / (1.5 \text{ ft/s}) \text{ or } T = D / (445 \text{ mm/s})$$

***** In 1116B.1.4 (Door size) in the exception the cross-reference to 'Section 1116B.1.6' is incorrect. Cross-reference should read 1116B.1.8. This will be submitted for correction in Rulemaking.

Where T is the total time in seconds and D is the distance from a point in the lobby or landing area 60 inches (1524 mm) directly in front of the farthest call button controlling that car to the centerline of its hoistway door (see Figure 11B-40D). For cars with in car lanterns, T begins when the lantern is visible from the vicinity of hall call buttons and an audible signal is sounded.

1116B.1.7 Car call. *The minimum acceptable time for doors to remain fully open shall not be less than five seconds.*

1116B.1.8 Car inside. *The car inside shall allow for the turning of a wheelchair. The minimum clear distance between walls or between wall and door, excluding return panels, shall not be less than 80 inches by 54 inches (2032 mm by 1372 mm) for center opening doors, and 68 inches by 54 inches (1727mmby 1372 mm) for side-slide openings doors. See Figure 11B-40A.Minimum distance from wall to return panel shall not be less than 51 inches (1295 mm).*

The centerline of elevator floor buttons shall be no higher than 54 inches (1372 mm) above the finish floor for side approach and 48 inches (1219 mm) for front approach. Except for photoelectric tube bypass switches, emergency controls, including the emergency stop and alarm, shall be grouped in or adjacent to the bottom of the panel and shall be no lower than 2 feet 11 inches (889 mm) from the floor.

*For multiple controls only, one set must comply with these height requirements. Floor buttons shall be provided with visual indicators to show when each call is registered. The visual indicators shall be extinguished when each call is answered. The emergency telephone handset shall be positioned no higher than 4 feet (1219 mm) above the floor, and the handset cord shall be a minimum of 2 feet 5 inches (737 mm) in length. If the telephone system is located in a closed compartment, the compartment door hardware shall be lever type conforming to the provisions of Section *****1004.3, type of lock or latch. Emergency intercommunication shall not require voice communication.*

> ***NOTE:*** *Where possible, a 48-inch (1219 mm) maximum height for elevator floor buttons is preferred.*

1116B.1.9 Car controls. *Identification for the visually impaired shall be as follows:*

Passenger elevator car controls shall have a minimum dimension of 3/4 inch (19.1 mm) and shall be raised 1/8 inch (3.2 mm) plus or minus 1/32 inch (0.8 mm) above the surrounding surface.

Control buttons shall be illuminated, shall have square shoulders and shall be activated by a mechanical motion that is detectable.

All control buttons shall be designated by 5/8-inch-minimum (15.9 mm) characters that conform to Section 1117B.5.5, or standard raised symbol immediately to the left of the control button. Grade 2 Braille that conforms to Section 1117B.5.6 shall be located immediately below the character or symbol. A minimum clear space of 3/8 inch (9.5 mm) or other suitable means of separation shall be provided between rows of control buttons.

> ***NOTE:*** *See Figure 11B-40B.*

The raised characters shall be white on a black background.

Controls and emergency equipment identified by raised symbols shall include, but not be limited to, door open, door close, alarm bell, emergency stop and telephone. The call button for the main entry floor shall be designated by a raised star at the left of the floor designation.

1116B.1.10 **Car position indicator and signal. *The centerline of the hall call button shall be within 42 inches (1067 mm) of the floor. Buttons shall be a minimum of 3/4-inch (19.1mm) in size and shall be raised 1/8 inch (3.2 mm) [plus or minus 1/32 inch (0.8 mm)] above the surrounding surface. Visual indication shall be provided to show each call registered and extinguished when answered. Objects adjacent to, and below, hall call buttons shall not project more than 4 inches (102 mm) from the wall.*

***** In 1116B.1.8 in the last sentence of the 3rd paragraph the cross-reference to 'Section 1004.3' is incorrect. Cross-reference should read 1003.3.1.8.
****** In 1116B.1.10 title of 'Car position indicator and signal' is incorrect. Title should read Hall Buttons. Also, the 4th line of section 1116B.1.13 is relocated to 1116B.1.10 as the 3rd line. This sentence is new language that was adopted in the 2001 Code Adoption cycle and is now published in the 2002 ed. of Part 2; however, it was adopted into the wrong section for 'Hall Buttons.' Footnotes will be submitted for correction in Rulemaking.

1116B.1.11 Handrails. *A handrail shall be provided on one wall of the car, preferably the rear. The rails shall be smooth, and the inside surface at least 1- ½ inches (38 mm) clear of the walls at a nominal height of 32 inches (813 mm) from the floor. Nominal equals ± 1 inch (25 mm).*

> ***NOTE:*** *Thirty-two inches (813 mm) required to reduce interference with car controls where lowest button is centered at 35 inches (889mm) above floor.*

1116B.1.12 Minimum illumination. *The minimum illumination at the car controls threshold and the landing when the car and landing doors are open shall not be less than 5 foot-candles (54 lx).*

****1116B.1.13 Hall buttons.*** *The centerline of the hall call buttons shall be a nominal 42 inches (1067 mm) above the floor.*

Direction buttons, exclusive of border, shall be a minimum of ¾ inch (19.1 mm) in size, raised, flush or recessed. Visual indication shall be provided to show each call registered and extinguished when the call is answered. Hall call buttons shall be internally illuminated with a white light over the entire surface of the button. Depth of flush or recessed button when operated shall not exceed 3/8 inch (9.5 mm).

1116B.1.14 Hall lantern. *A visual and audible signal shall be provided at each hoistway entrance indicating to the prospective passenger the car answering the call and its direction of travel as follows:*

The visual signal for each direction shall be a minimum of 2-½ inches (64 mm) high by 2 ½ inches (64 mm) wide and visible from the proximity of the hall call button.

The audible signal shall sound once for the up direction and twice for the down direction or of a configuration that distinguishes between up and down elevator travel.

The centerline of the fixture shall be located a minimum of 6 feet (1829 mm) in height from the lobby floor.

The use of in-car lanterns, located in or on the car doorjambs, visible from the proximity of the hall call buttons and conforming to the above requirements, shall or will be acceptable.

The use of arrow shapes are preferred for visible signals.

1116B.1.15 Doorjamb marking. *Passenger elevator landing jambs on all elevator floors shall have the number of the floor on which the jamb is located designated by raised characters that are a minimum of 2 inches (51 mm) in height and conform to Section 1117B.5.5 and Grade 2 Braille that conforms to Section 1117B.5.6 located 60 inches on center (1524 mm) above the floor on the jamb panels on both sides of the door so that they are visible from within the elevator. On the grade level, a raised five pointed star shall be placed to the left of the raised character. The outside diameter of the star shall be 2 inches. Braille shall be placed below the corresponding raised characters.*

The raised characters shall otherwise comply with Sections 1117B.5.3, 1117B.5.4 and 1117B.5.2. See Figure 11B-40B.

1116B.1.16 Location. *Passenger elevators shall be located near a major path of travel, and provisions shall be made to ensure that they remain accessible and usable at all times the building is occupied.*

1116B.2 Special Access (Wheelchair) Lifts. *Special access wheelchair lifts may be provided between levels in lieu of passenger elevators when the vertical distance between landings, as well as the structural design and safeguards are as allowed by the State of California, Division of the State Architect, Access Compliance, the Department of Industrial Relations, Division of Occupational Safety and Health and any applicable safety regulations of other administrative authorities having jurisdiction.*

---

* In 1116B.1.13 (Hall buttons) was erroneously shown as being adopted by DSA/AC. Section 1116B.1.13 is model code language as published in the 2001 ed. of Part 2 in Chapter 30 and is in conflict with existing State language for 'hall buttons' in 1116B.1.10. Repeal 1116B.1.13 except for the 4th sentence, which is being relocated to 1116B.1.10. This will be submitted for correction in Rulemaking.

If lifts are provided, they shall be designed and constructed to facilitate unassisted entry, operation and exit from the lift and shall comply with the restrictions and enhancements of this section in conjunction with Sections 3093 to 3094, Part 7 of the California Code of Regulations.

Additionally, lifts may be provided as part of an accessible route only for the following conditions:

1116B.2.1 *To provide an accessible route to a performing area in an assembly occupancy, or to a speaking area or similar place (such as a dais for "head table") in an assembly or Group B Occupancy.*

1116B.2.2 *To comply with the wheelchair viewing position line of-sight and dispersion requirements of Section 1104B.3.5.*

1116B.2.3 *To provide access to incidental occupiable spaces and rooms which are not open to the general public and which house no more than five persons, including, but not limited to, equipment control rooms and projection booths.*

1116B.2.4 *To provide access where existing site constraints or other constraints make use of a ramp or an elevator infeasible.*

> ***EXCEPTIONS:***
> ***1.*** *The provisions of this section shall not apply to existing buildings when physical constraints will not allow compliance with these regulations or equivalent facilitation without creating an unreasonable hardship.*
>
> > ***NOTE:*** *See Section 101.17.*
>
> ***2.*** *When the enforcing agency determines that compliance with any regulation under this section would create an unreasonable hardship, an exception to such regulation shall be granted when equivalent facilitation is provided.*
>
> ***3.*** *The installation of lifts as part of an accessible route for additions or alterations is not limited to the four conditions required by Section 1116B.*

1116B.2.4.1 Landing size. *In new construction, the minimum size of landings specified in this section shall be 60 inches by 60 inches (1524 mm by 1524 mm). Other dimensions may be substituted where it can be demonstrated that a person using a wheelchair measuring 30 inches by 48 inches (762mmby 1219 mm) can enter and operate the lift safely.*

1116B.2.4.2 Relationship to the path of travel. *Level and clear floor areas or landings as specified in this section shall be part of "path of travel" requirements. See Section 217.*

1116B.3 Special Access (Wheelchair) Lifts. *Special access (wheelchair) lifts shall not be used as a component of an exit component in an egress system.*

> ***EXCEPTION:*** *When provided as a means of egress component per Section ******1116B.2.2 the specialty access lift is permitted to be part of an accessible exit component when:*
>
> ***1.*** *The building has a supervised automatic sprinkler system.*
>
> ***2.*** *The area served by the special access lift does not serve more than 4 wheelchair viewing positions.*
>
> ***3.*** *The length of the common path of travel to a point where the occupant has a choice of two directions to an exit shall not exceed 30 feet (9144 mm). The length of the common path of travel shall include the vertical travel distance of the lift.*
>
> ***4.*** *The special access lift is provided with standby power or with self-recharging battery power that provides sufficient power to operate all platform lift functions for a minimum of 5 (five) upward and downward trips.*

1116B.3.1 Platform *lifts used, as a component in a means of egress system shall conform to the requirements of Section 1116B.3.*

1116B.3.2 Platform *lifts shall be provided with standby power or with self-rechargeable battery power that provides sufficient power to operate all platform lift functions for a minimum of 5 (five) upward and downward trips.*

***** In 1116B.3 (Special Access (Wheelchair) Lifts) in the exception the cross-reference to "Section 1116B.2.2" is incorrect. Cross-reference should read 1116B.2. This will be submitted for correction in Rulemaking.

1116B.3.3 *When used to comply to Section 1116B.2.2 wheelchair viewing position line-of-sight and dispersion requirements of Chapter 11B and the maximum distance to a point where the occupant has a choice of two directions of travel to an exit shall not exceed 30 feet (9144 mm) from the point where the wheelchair occupant is seated. Where a platform lift is used as the accessible means of egress, the maximum distance shall include the vertical travel distance of the platform lift.*

SECTION 1117B – OTHER BUILDING COMPONENTS

1117B.1 Water Fountains (Drinking).

1117B.1.1 General. *Where water fountains are provided, they shall comply with this section.*

*In new construction, where only one drinking fountain area is provided on a floor, there shall be a drinking fountain that is accessible to individuals who use wheelchairs in accordance with Section *****1115B.2.1.2 and one accessible to those who have difficulty bending or stooping. This can be accommodated by the use of "hi-low" fountains, or by such other means as would achieve the required accessibility for each group on each floor.*

1117B.1.2 Alcoves. *Water fountains shall be located completely within alcoves or otherwise positioned so as not to encroach into pedestrian ways. The alcove in which the water fountain is located shall not be less than 32 inches (813 mm) in width and 18 inches (457 mm) in depth. See Figure 11B-3 of this code. Protruding objects located in alcoves or otherwise positioned so as to limit encroachment into pedestrian ways are permitted to project 4 inches into **walls, halls corridors, passageways or aisles.*

> ***EXCEPTION:*** *When the enforcing agency determines that it would create an unreasonable hardship to locate the water fountain in an alcove, the water fountain may project into the path of travel, and the path of travel shall be identifiable to the blind as follows:*
>
> ***1.*** *The surface of the path of travel at the water fountain shall be textured so that it is clearly identifiable by a blind person using a cane. The minimum textured area shall extend from the wall supporting the water fountain to 1 foot (305 mm) beyond the front edge of the water fountain and shall extend 1 foot (305mm) beyond each side of the water fountain, or*
>
> ***2.*** *Wing walls shall be provided on each side of the water fountain. The wing walls shall project out from the supporting wall at least as far as the water fountain to within 6 inches (152 mm) of the surface of the path of travel. There shall also be a minimum of 32 inches (813 mm) clear between the wing walls.*

1117B.2 Telephones.

1117B.2.1 General. *If public telephones are provided, they shall comply with this section to the extent required by the following table. See Figure 11B-4.*

Number of each type of telephone provided on each floor	*Minimum number of telephones required to comply with Section 1117B.2*[1]
1 or more single units	*1 or at least 50 percent of telephone unit(s) per floor*
1 telephone bank	*1 or at least 50 percent of telephone unit(s) per bank*
2 or more banks	*1 or at least 50 percent of telephone unit(s) per bank at least 1 telephone per floor shall meet the requirements for a forward reach telephone*

[1]*Additional public telephones may be installed at any height.*

1117B.2.2 Clear floor ground space. *A clear floor or ground space at least 30 inches by 48 inches (762 mm by 1219 mm) that allows either a forward or parallel approach by a person using a wheelchair shall be provided at telephones.*

***** In 1117B.1.1 (General) in paragraph 2 the cross-reference to "Section 1115B.2.1.2" is incorrect. Cross-reference should read 1115B.2.1.5.

** In 1117B.1.2 the word 'walls' is spelled incorrectly. Word should read 'walks'. Footnotes will be submitted for correction in Rulemaking.

1117B.2.3 Size and approach. *The minimum clear floor ground space required to accommodate a single, stationary wheelchair and occupant is 30 inches by 48 inches (762mmby 1219 mm). The minimum clear floor or ground space for wheelchairs may be positioned for forward or parallel approach to an object. Clear floor or ground space for wheelchairs may be part of the knee space required under some objects. See Figure 11B-5A.*

1117B.2.4 Relationship of maneuvering clearances to wheelchair spaces. *One full unobstructed side of the clear floor or ground space for a wheelchair shall adjoin another wheelchair clear floor space. If a clear floor space is located in an alcove or otherwise confined on all or part of three sides, additional maneuvering clearances shall be provided. See Figure 11B-5A.*

1117B.2.5 Floor surfaces of wheelchair spaces. *Floor surfaces of wheelchair spaces shall conform to Section 1124B. Bases, enclosures and fixed seats shall not impede approaches to telephones by people who use wheelchairs.*

1117B.2.6 Mounting height. *The highest operable part of the telephone shall be within the reach ranges specified in Sections 1118B.5 and 1118B.6. Telephones mounted diagonally in a corner that require wheelchair users to reach diagonally shall have the highest operable part no higher than 54 inches (1372 mm) above the floor. See Figure 11B-4.*

1117B.2.7 Enclosures. *If telephone enclosures are provided, they may overhang the clear floor space required in Sections 1117B.2.2, 1117B.2.3 and 1117B.2.4 within the following limits:*

> ***1. Side reach possible.*** *The overhang shall be no greater than 19 inches (483 mm). The height of the lowest overhanging part shall be equal to or greater than 27 inches (686 mm). See Figure 11B-4 (a).*
>
> ***2. Full-height enclosures.*** *Entrances to full-height enclosures shall be 30 inches (762 mm) minimum. See Figure 11B-4 (b).*
>
> ***3. Forward reach required.*** *If the overhang is greater than 12 inches (305 mm), then the clear width of the enclosure shall be 30 inches (762 mm) minimum; if the clear width of the enclosure is less than 30 inches (762 mm), then the height of the lowest overhanging part shall be equal to or greater than 27 inches (686 mm). See Figure 11B-4 (c).*
>
> ***4. Protruding telephone enclosures.*** *Where telephone enclosures protrude into walls, halls, corridors or aisles, they shall also comply with Section 1133B.8.6.*

1117B.2.8 Telephone equipment for hearing impaired persons. *Telephones shall be equipped with a receiver that generates a magnetic field in the area of the receiver cap. If banks of public telephones are provided, at least one in each bank and a total of at least 25 percent of the total number of public telephones, including closed-circuit telephones in a building or facility, shall be equipped with a volume control. Such telephones shall be capable of a minimum of 12 dBA and a maximum of 18 dBA above normal. If an automatic reset is provided, 18 dBA may be exceeded. Public telephones with volume control shall be hearing aid compatible and shall be identified by a sign containing a depiction of a telephone handset with radiating sound waves.*

1117B.2.9 Text telephones.

1117B.2.9.1 Where required. *If a total of four or more public pay telephones are provided at the interior and exterior of a site, and if at least one of the total is in an interior location, then at least one interior public text telephone shall be provided.*

> ***EXCEPTIONS:***
> ***1.*** *If an interior public pay telephone is provided in a stadium or arena, in a convention center, in a hotel with a convention center, or in a covered mall, at least one interior public text telephone shall be provided in the facility.*
>
> ***2.*** *If a public pay telephone is located in or adjacent to a hospital emergency room, hospital recovery room or hospital waiting room, one public text telephone shall be provided at each location.*

1117B.2.9.2 General. *Text telephones shall comply with the following requirements:*

1. *Text telephones used with a pay telephone shall be permanently affixed within or adjacent to the telephone enclosure. If an acoustic coupler is used, the telephone cord shall be sufficiently long to allow connection of the text telephone and the telephone receiver.*

2. *Pay telephones designed to accommodate a portable text telephone shall be equipped with a shelf and an electrical outlet within or adjacent to the telephone enclosure. The telephone handset shall be capable of being placed flush on the surface of the shelf. The shelf shall be capable of accommodating a text telephone and shall have 6 inches (152 mm) minimum vertical clearance in the area where the text telephone is to be placed.*

3. *Equivalent facilitation may be substituted for the requirements of this section. For example, a portable text telephone may be made available in a hotel at a registration desk if it is available on a 24-hour basis for use with nearby public pay phones. In this instance, at least one pay phone shall comply with Item 2. In addition, if an acoustic coupler is used, the telephone handset cord shall be sufficiently long to allow connection of the text telephone and the telephone receiver. Directional signage shall comply with Section 1117B.5.*

1117B.2.9.3 Signage. *Text telephones shall be identified by the International TTY symbol (see Figure *****11B-14). If a facility has a public text telephone, directional signage indicating the location of the nearest such telephone shall be placed adjacent to all banks of telephones that do not contain a text telephone. Such directional signage shall include the International TTY symbol. If a facility has no banks of telephones, the directional signage shall be provided at the entrance or in a building directory.*

1117B.2.10 Controls. *Telephones shall have push-button controls where service for such equipment is available.*

1117B.2.11 Cord length. *The cord from the telephone to the handset shall be at least 29 inches (737 mm) long.*

1117B.2.12 Telephone books. *If telephone books are provided, they shall be located in a position that complies with the reach ranges in Sections 1118B.5 and 1118B.6.*

1117B.3 Kitchens. *See Section 1112A.*

1117B.4 Swimming Pools. *See Section 1104B.4.3.*

1117B.5 Signs and Identification.

> ***NOTE:*** *California's standards for signage are more stringent and are significantly larger and wider than Federal law, Americans with Disabilities Act (ADA) Section 4.30.*

1117B.5.1 **International symbol of accessibility.

1. **General. *When new or additional signs and/or identification devices are provided, or when existing signs and/or identification devices are replaced or altered, the new or altered signs and/or identification devices shall comply with 1117B.5. The addition of or replacement of signs and/or identification devices shall not trigger any additional path of travel requirements.*

***** In 1117B.2.9.3 (Signage) cross-reference to 'Figure 11B-14 ' is incorrect. Cross-reference should read 11B-14A.

** In 1117B.5.1 (International Symbol of Accessibility) Title of 1117B.5.1 and title of item #1 under 1117B.5.1 are incorrect. The regulations for the International Symbol of Accessibility are found 1117B.5.8. Correct title of 1117B.5.1 to read 'General' and delete the title from Item #1. Footnotes will be submitted for correction in Rulemaking.

2. Identification signs. *When signs identify permanent rooms and spaces of a building or site, they shall comply with 1117B.5.2, 1117B.5.3, 1117B.5.5, 1117B.5.6 and 1117B.5.7.*

> ***NOTE:*** *For other means of egress signs and identification provisions adopted by SFM & DSA/AC see Chapter 10, Sections 1003.2.8.1 for Visual Exit Signs, 1003.2.8.2 for Where Required, 1003.2.8.3 for Graphics, 1003.2.8.4 for Illumination, 1003.2.8.5 for Power Source, 1003.2.8.6 for Tactile Exit Signage, 1003.2.8.6.1 for Where Required, 1003.3.3.13.1 for Tactile Stair Level Identification Sign, and 1003.3.1.10 for Special Egress-control Devices.*

3. Direction and informational signs. *When signs direct to or give information about permanent rooms and space of a building or site, they shall comply with 1117B.5.2, 1117B.5.3 and 1117B.5.4.*

4. Accessibility signs. *When signs identify, direct or give information about accessible elements and feature of a building or site, they shall include the appropriate symbol of accessibility and shall comply with 1117B.5.2 and, when applicable, 1117B.5.8.*

1117B.5.2 Finish and contrast. *Characters, symbols and their background shall have a non-glare finish. Characters and symbols shall contrast with their background, either light characters on a dark background or dark characters on a light background.*

1117B.5.3 Proportions. *Characters on signs shall have a width to-height ratio of between 3:5 and 1:1 and a stroke width to height ratio of between 1:5 and 1:10.*

1117B.5.4 Character height. *Characters and numbers on signs shall be sized according to the viewing distance from which they are to be read. The minimum height is measured using an uppercase X. Lowercase characters are permitted. For signs suspended or projected above the finish floor in compliance with Section 1133B.8.6, the minimum character height shall be 3 inches (76 mm).*

1117B.5.5 Raised characters and pictorial symbol signs. *When raised characters are required or when pictorial symbols (pictograms) are used on such signs, they shall conform to the following requirements:*

> ***1. Character type.*** *Characters on signs shall be raised 1/32-inch (0.794 mm) minimum and shall be sans serif uppercase characters accompanied by Grade 2 Braille complying with 1117B.5.6.*
>
> ***2. Character size.*** *Raised characters shall be a minimum of 5/8 inch (15.9 mm) and a maximum of 2 inches (51 mm) high.*
>
> ***3. Pictorial symbol signs (pictograms).*** *Pictorial symbol signs (pictograms) shall be accompanied by the verbal description placed directly below the pictogram. The outside dimension of the pictogram field shall be a minimum of 6 inches (152 mm) in height.*

1117B.5.6 Braille. *Contracted Grade 2 Braille shall be used wherever Braille is required in other portions of these standards. Dots shall be 1/10 inch (2.54 mm) on centers in each cell with 2/10-inch (5.08 mm) space between cells, measured from the second column of dots in the first cell to the first column of dots in the second cell. Dots shall be raised a minimum of 1/40 inch (0.635 mm) above the background.*

1117B.5.7 Mounting location and height. *Where permanent identification is provided for rooms and spaces, signs shall be installed on the wall adjacent to the latch *outside of the door. Where there is no wall space on the latch side, including at double leaf doors, signs shall be placed on the nearest adjacent wall, preferably on the right.*

Mounting height shall be 60 inches (1524 mm) above the finish floor to the center line of the sign. Mounting location shall be determined so that a person may approach within 3 inches (76 mm) of signage without encountering protruding objects or standing within the swing of a door.

> ***NOTE:*** *See also Section 1115B.5 for additional signage requirements applicable to sanitary facilities.*

---

* In 1117B.5.7 (Mounting location and height) the 1st sentence is incorrectly worded, which is causing misunderstanding regarding proper application. Correct word 'outside' to read 'side'. This will be submitted for correction in Rulemaking.

1117B.5.8 Symbols of accessibility.

1117B.5.8.1 *Symbols of accessibility. *The International Symbol of Accessibility shall be the standard used to identify facilities that are accessible to and usable by physically disabled persons as set forth in these building standards and as specifically required in this section. See Figure 11B-6.*

> ***EXCEPTION:*** *Signs need not be provided for facilities within an adaptable dwelling unit, or within an accessible patient or guest room.*

1117B.5.8.1.1 Color of symbol. *The symbol specified above shall consist of a white figure on a blue background. The blue shall be equal to Color No. 15090 in Federal Standard 595B.*

> ***EXCEPTION:*** *The appropriate enforcement agency may approve special signs and identification necessary to complement decor or unique design when it is determined that such signs and identification provide adequate direction to persons with disabilities.*

1117B.5.8.1.2 Entrance signs. *All building entrances that are accessible to and usable by persons with disabilities shall be identified with a minimum of one International Symbol of Accessibility and with additional directional signs, utilizing the symbol, at junctions, to be visible to persons along approaching pedestrian ways.*

1117B.5.8.1.3 Information posted. *Buildings that have been remodeled to provide specific sanitary facilities and/or elevators for public use that conform to these building standards shall have this information posted in the building lobby, preferably as part of the building directory. The information shall be accompanied by the International Symbol of Accessibility.*

1117B.5.8.2 International symbol of TTY. *Where the International Symbol of TTY is required, it shall comply with Figure 11B-14A.*

1117B.5.8.3 Volume control telephones. *Where telephones with volume controls are required to be identified, the identification symbol shall be a telephone hand set with radiating sound waves, such as shown in Figure 11B-14B.*

1117B.5.8.4 Assistive listening systems. *Where assistive listening systems are required to be identified by the International Symbol of Access for Hearing Loss, it shall comply with Figure 11B-14C.*

1117B.5.9 Traffic-control devices. *Pole-supported pedestrian traffic-control buttons shall be identified with color coding consisting of a textured horizontal yellow band 2 inches (51 mm) in width encircling the pole, and a 1-inch wide (25 mm) dark border band above and below this yellow band. Color coding should be placed immediately above the control button. Control buttons shall be located no higher than 48 inches (1219 mm) above the surface adjacent to the pole.*

1117B.5.10 Signs for text telephones. *Whenever signs shall refer to text telephones for people who are deaf or hard of hearing, the term "TTY" shall be used; the term "TDD" shall not be used.*

1117B.5.11 Cleaner air symbol. ***"****STRICTLY FOR PUBLICLY FUNDED FACILITIES OR ANY FACILITIES LEASED OR RENTED BY STATE OF CALIFORNIA. NOT CONCESSIONAIRES".* *This symbol shall be the standard used to identify a room, facility and paths of travel that are accessible to and usable by people who are adversely impacted by airborne chemicals or particulate(s) and/or the use of electrical fixtures and/or devices. When used, the symbol shall comply with Figure 11B-40.*

1117B.5.11.1 Color and size of symbol. *The symbol shall be used when the following minimum conditions are met. The symbol, which shall include the text "Cleaner Air" as shown, shall be displayed either as a negative or positive image within a square that is a minimum of 6 inches on each side. The symbol may be shown in black and white or in color. When color is used, it shall be Federal Blue (Color No. 15090 Federal Standard 595B) on white, or white on Federal Blue. There shall be at least a 70% color contrast between the background of the sign from the surface that it is mounted on.*

Strictly for publicly funded public facilities or any facilities leased or rented by State of California. Not concessionaires.

---

* In 1117B.5.8.1 (Symbols of Accessibility) the title of this section is incorrectly worded, which is causing misunderstanding regarding proper standard reference. Change title to read 'International Symbol of Accessibility.' This will be submitted for correction in Rulemaking.

1117B.5.11.2 Conditions of use. *Use of the cleaner air symbol is voluntary. The cleaner air symbol shall be permitted for use to identify a path of travel, and a room or a facility when the following is met.*

1. *Floor or wall coverings, floor or wall covering adhesives, carpets, formaldehyde-emitting particleboard cabinetry, cupboards or doors have not been installed or replaced in the previous 12 months.*

2. *Incandescent lighting provided in lieu of fluorescent or halogen lighting, and electrical systems and equipment shall be operable by or on behalf of the occupant or user of the room, facility or path of travel.*

3. *Heating, ventilation, air conditioning and their controls shall be operable by or on behalf of the occupant or user.*

4. *To maintain "cleaner-air" designation only nonirritating, nontoxic products will be used in cleaning, maintenance, disinfection, pest management or for any minimal touch-ups that are essential for occupancy of the area. Deodorizers or Fragrance Emission Devices and Systems (FEDS) shall not be used in the designated area. Pest control practices for cleaner-air areas shall include the use of bait stations using boric acid, sticky traps and silicon caulk for sealing cracks and crevices. Areas shall be routinely monitored for pest problems. Additional nontoxic treatment methods, such as temperature extremes for termites, may be employed in the event of more urgent problems. These pest control practices shall not be used 48 hours prior to placement of the sign, and the facility shall be ventilated with outside air for a minimum of 24 hours following use or application.*

5. *Signage shall be posted requesting occupants or users not to smoke or wear perfumes, colognes or scented personal care products. Fragranced products shall not be used in the designated cleaner-air room, facility or path of travel.*

6. *A log shall be maintained on site, accessible to the public either in person or by telephone, e-mail, fax or other accessible means as requested. One or more individuals shall be designated to maintain the log. The log shall record any product or practice used in the cleaner-air designated room, facility or path of travel, as well as scheduled activities, that may impact the Cleaner-Air designation. The log shall also include the product label as well as the *****material Safety Data Sheets (MSDS).*

1117B.5.11.3 Removal of symbol. *If the path of travel, room and/or facility identified by the cleaner air symbol should temporarily or permanently cease to meet the minimum conditions as set forth above, the cleaner air symbol shall be removed and shall not be replaced until the minimum conditions are again met.*

1117B.6 Controls and Operating Mechanisms. *See also Sections 210-7(g), 380-8(c) and ******760-9, California Electrical Code, for electrical installation.*

1. General. *Controls and operating mechanisms required to be accessible by Section 101.17.11 shall comply with the requirements of this section.*

2. Clear floor space. *Clear floor space complying with Section 1118B.4 that allows a forward or parallel approach by a person using a wheelchair shall be provided at controls, dispensers, receptacles and other operable equipment.*

3. Height. *The highest operable part of all controls, dispensers, receptacles and other operable equipment shall be placed within at least one of the reach ranges specified in Sections 1118B.5 and 1118B.6. Electrical and communication system receptacles on walls shall be mounted no less than 15 inches (381 mm) above the floor.*

> ***EXCEPTION:*** *These requirements do not apply where the use of special equipment dictates otherwise or where electrical and communications systems receptacles are not normally intended for use by building occupants.*

4. Operation. *Controls and operating mechanisms shall be operable with one hand and shall not require tight grasping, pinching or twisting of the wrist. The force required to activate controls shall be no greater than 5 pounds (22.2 N) of force.*

***** In 1117B.5.11.2 (Conditions of Use) #6 the first letters of each word referring to MSDS should all begin with capital letters.
****** In 1117B.6 (Controls and Operating Mechanisms) the cross-reference to Section 760-9 is incorrect. Cross-reference should read 760-16. Footnotes will be submitted for correction in Rulemaking.

1117B.7 Automated Teller Machines and Point of Sale Machines.

1117B.7.1 Definitions.

1. AUTOMATED TELLER MACHINE (ATM) *means any electronic information processing device, including a point-of sale machine, used by a financial institution or other business entity and its customers for the primary purpose of executing financial transactions between itself and its customers. For the purposes of this section, automated teller machine includes point-of-sale machines used in grocery stores, ticket sales facilities, and other business entities, but does not include card-reading-devices located on fuel pump islands at gasoline service stations and motor-vehicle fuel facilities.*

2. ATM SITE *means that immediate area which is within or made or to be made part of an existing building or a building to be constructed, and to which one or more ATMs is or shall be affixed.*

3. ATM INSTALLATION *means a single ATM structurally affixed to a building or other structure.*

1117B.7.2 General. *Where ATMs are provided for the public, they shall comply with this section.*

> ***EXCEPTIONS:***
> ***1.*** *In grocery stores and other retail outlets with point-of-sale machines located at individual check stands, machines that are located at accessible check stands must be made accessible. Where machines are located away from individual check stands, they must all be made accessible.*
>
> ***2.*** *Where the enforcing agency determines that compliance with this regulation would create an unreasonable hardship, an exception may be granted when equivalent facilitation is provided through the use of other methods or materials.*
>
> ***3.*** *In existing buildings, these regulations shall not apply when legal or physical constraints would not allow compliance with these regulations or equivalent facilitation without creating an unreasonable hardship. See Section 101.17.11,* *******Item 4.*
>
> ***4.*** *Drive-up-only automated teller machines are not required to comply with this section.*
>
> ***5.*** *Card reading devices located on fuel pump islands at gasoline service stations and motor-vehicle fuel facilities are not required to comply with Sections 1114B through 1126B and all subsections there under.*

1117B.7.3 Controls. *Controls for user activation shall comply with the requirements of Section 1117B.6, Item 4, which states that controls and operating mechanisms shall be operable with one hand and shall not require tight grasping, pinching or twisting of the wrist. The force required to activate controls shall be no greater than 5 pounds (22.2 N) of force.*

1117B.7.4 Clearances and reach range. *Free-standing or built-in units not having a clear space under them shall comply with the following as to clearance and reach range.*

1117B.7.4.1 Where one ATM is provided. *Where one ATM is provided at a location, it shall meet the specifications of Section 4.34 of the Americans with Disabilities Act Accessibility Guide lines (ADAAG) as follows:*

> ***1.*** *The ATM shall be located so that clear floor space complying with Section 1118B.4 is provided to allow a person using a wheelchair to make a forward approach, a parallel approach, or both, to the machine.*
>
> ***2. Forward approach only.*** *If only a forward approach is possible, operable parts of all controls shall be placed within the forward reach range specified in Section 1118B.5.*
>
> ***3. Parallel approach only.*** *If only a parallel approach is possible, operable parts of controls shall be placed as follows:*
>
> > ***3.1*** *Reach* ***depth not more than 10 inches (254 mm).*** *Where the reach depth to the operable parts of all controls as measured from he vertical plane perpendicular to the edge of the unobstructed clear floor space at the farthest protrusion of the automated teller machine or surround is not more than 10 inches (254 mm), the maximum height from the floor shall be 54 inches (1372 mm).*

***** In 1117B.7.2 (General) in Exception 3 the cross-reference to Section 101.17.11, Item 4 is incorrect. Cross-reference should read Item 5. This will be submitted for correction in Rulemaking.

3.2 Reach depth more than 10 inches (254 mm). *Where the reach depth to the operable parts of any control as measured from the vertical plane perpendicular to the edge of the unobstructed clear floor space at the farthest protrusion of the ATM or surround is more than 10 inches (254 mm), the maximum height from the floor shall be as shown in Table 11B-5.*

4. Forward and parallel approach. *If both a forward and parallel approach are possible, operable parts of controls shall be placed within at least one of the reach ranges in Item 2 or 3.*

5. Bins. *Where bins are provided for envelopes, waste paper, or other purposes, at least one of each type provided shall comply with the applicable reach ranges in Item 2, 3 or 4.*

EXCEPTION: *Where a function can be performed in a substantially equivalent manner by using an alternate control, only one of the controls needed to perform that function is required to comply with this section. If the controls are identified by tactile markings, such markings shall be provided on both controls.*

1117B.7.4.2 Where two ATMs are provided. *Where two ATMs are provided at a location, one shall comply with Section 1117B.7.4.1, except that the highest operable part shall be 48 inches (1219 mm) maximum. The second ATM is not regulated as to height, including height of display.*

1117B.7.4.3 Where three or more ATMs are provided. *Where three or more ATMs are provided, two shall be used to satisfy Section 1117B.7.4.2, above. For the additional ATMs beyond the first two, at least 50 percent shall comply with Section 1117B.7.4.1. The remainder are not regulated as to height, including height of display. If features provided differ from ATM to ATM, all features shall be equally represented among the accessible ATMs.*

1117B.7.5 Display. *LED, cathode ray, or other screen devices intended to be viewed by the user shall be positioned so they are readily visible to and usable by a person sitting in a wheelchair with approximate eye level of 45 inches (1143 mm), and shall comply with the following requirements:*

NOTE: *Automated teller machines allowed to be unregulated as to height in Sections 1117B.7.4 through 1117B.7.4.3 above are also exempt from this section.*

1. Vertically mounted screen devices. *If mounted vertically or tipped no more than 30 degrees away from the viewer, the center line of screens and other screen devices shall be located a maximum of 52 inches (1321 mm) above grade.*

2. Angle-mounted screen devices. *If mounted at an angle between 30 degrees and 60 degrees tipped away from the viewer, the center line of screens and other screen devices shall be located a maximum of 44 inches (1118 mm) above grade.*

3. Horizontally mounted screen devices. *If mounted at an angle between 60 degrees and 90 degrees tipped away from the viewer, the center line of screens and other screen devices shall be located a maximum of 34 inches (864 mm) above grade.*

TABLE 11B-5 – MAXIMUM REACH DEPTH FOR AUTOMATED TELLER MACHINES

REACH DEPTH (X) (Inches)	MAXIMUM HEIGHT (Y) (Inches)
× 25.4 for mm	
10	54
11	53.5
12	53
13	52.5
14	51.5
15	51
16	50.5
17	50
18	49.5
19	49
20	48.5
21	47.5
22	47
23	46.5
24	46

NOTE: *See *****Figure 11B-5D (d).*

1117B.7.6 ATM equipment for persons with vision impairments. *Instructions and all information for use shall be made accessible to and independently usable by persons with vision impairments.*

SECTION 1118B – SPACE ALLOWANCE AND REACH RANGES

1118B.1 Wheelchair Passage Width. *The minimum clear width for single wheelchair passage shall be 32 inches (813 mm) at a point and 36 inches (914 mm) continuously. See Figure 11B-12.*

1118B.2 Width for Wheelchair Passing. *The minimum width for two wheelchairs to pass is 60 inches (1524 mm). See Figure 11B-12.*

1118B.3 Wheelchair Turning Space. *The space required for a wheelchair to make a 180 degree turn is a clear space of 60 inches (1524 mm) diameter [see Figure 11B-12 (a)] or a T-shaped space. See Figure 11B-12 (b).*

1118B.4 Clear Floor or Ground Space for Wheelchairs.

1. Size and approach. *The minimum clear floor or ground space required to accommodate a single, stationary wheelchair and occupant is 30 inches by 48 inches (762 mm by 1219 mm). The minimum clear floor or ground space for wheelchairs may be positioned for forward or parallel approach to an object. Clear floor or ground space for wheelchairs may be part of the knee space required under some objects. See Figure 11B-5A.*

2. Relationship of maneuvering clearances to wheelchair spaces. *One full unobstructed side of the clear floor or ground space for a wheelchair shall adjoin or overlap an accessible route or adjoin another wheelchair clear floor space. If a clear floor space is located in an alcove or otherwise confined on all or a part of three sides, additional maneuvering clearances shall be provided as shown in Figure 11B-5A (b). See Figure 11B-5A.*

1118B.5 Forward Reach. *If the clear floor space allows only forward approach to an object, the maximum high forward reach allowed shall be 48 inches (1219 mm) [see Figure 11B-5C (b)]. The minimum low forward reach is 15 inches (381 mm). If the high forward reach is over an obstruction, reach and clearances shall be as shown in Figure 11B-5C (a).*

***** In the Note below Table 11B-5 (Maximum Reach Depth for Automated Teller Machines) the cross-reference to Figure 11B-5D(d) is incorrect. Cross-reference should read Figure 11B-5F(d). This will be submitted for correction in Rulemaking.

1118B.6 Side reach. *If the clear floor space allows parallel approach by a person in a wheelchair, the maximum high side reach allowed shall be 54 inches (1372 mm) and the low side reach shall be no less than 9 inches (229 mm) above the floor [see Figure 11B-5D (a) and (b)]. If the side reach is over an obstruction, the reach and clearances shall be as shown in Figure 11B-5D (c). See Figure 11B-5D.*

SECTION 1119B – SPECIAL STANDARDS OF ACCESSIBILITY FOR BUILDINGS WITH HISTORICAL SIGNIFICANCE

See Section 1135B.

SECTION 1120B – FLOORS AND LEVELS

1120B.1 Floors Within Each Story. *In buildings and facilities, floors of a given story shall be a common level throughout, or shall be connected by pedestrian ramps, passenger elevators or special access lifts.*

> ***EXCEPTIONS:***
> ***1.*** *In existing buildings, other than dining banquet and bar facilities, when the enforcing agency determines that compliance with this section would create an unreasonable hardship, an exception shall be granted when equivalent facilitation is provided.*
>
> ***2.*** *In existing dining, banquet and bar facilities, when the enforcing agency determines that compliance with this section would create an unreasonable hardship, an exception shall be granted provided that a minimum of 75 percent of the dining, banquet and bar area shall be a common level throughout or shall be connected by pedestrian ramps, passenger elevators or special lifts. See Section 101.17.11, Item 1.4, for new buildings only.*
>
> ***3.*** *In existing buildings, this section shall not apply when legal or physical constraints would not allow compliance with this section or equivalent facilitation without creating an unreasonable hardship. See Section 101.17.11, *****Item 4.*
>
> ***4.*** *Where specifically exempted in other portions of this code.*

1120B.2 Floor Surface. *The surface of floors shall be slip resistant and shall comply with Section 1124B.*

SECTION 1121B – RESERVED

SECTION 1122B – FIXED OR BUILT-IN SEATING, TABLES, AND COUNTERS

1122B.1 Minimum Number. *Where fixed or built-in seating, tables, or counters are provided for the public, and in general employee areas, 5 percent, but never less than one, must be accessible as provided in this section.*

1122B.2 Seating. *If seating spaces for persons in wheelchairs are provided at fixed tables or counters, clear floor space complying with Section 1118B.4 shall be provided. Such clear floor space shall not overlap knee space by more than 19 inches (483 mm) (see Figure 11B-13).*

1122B.3 Knee Clearance. *If seating for persons in wheelchairs is provided at fixed tables or counters, knee spaces at least 27 inches (686 mm) high, 30 inches (762 mm) wide and 19 inches (483 mm) deep shall be provided (see Figure 11B-13).*

> ***EXCEPTION:*** *Knee clearance is not required at checkout counters or service counters.*

1122B.4 Height of Work Surfaces. *The tops of tables and counters shall be 28 inches to 34 inches (711 mm to 864 mm) from the floor or ground.*

Where a single counter contains more than one transaction station, such as (but not limited to) a bank counter with multiple teller windows or a retail sales counter with multiple cash register stations, at least 5 percent, but never less than one, of each type of station shall be located at a section of counter that is at least 36 inches (914 mm) long and no more than 28 to 34 inches (711 to 864 mm) high.

***** In 1120B.1 (Floors Within Each Story) in Exception 3 the cross-reference to 'Section 101.17.11, Item 4' is incorrect. Cross-reference should read Item 5. This will be submitted for correction in Rulemaking.

SECTION 1123B – ACCESS TO EMPLOYEE AREAS

1123B.1 General. *Employee areas shall conform to all requirements of Division of the State Architect/Access Compliance in the California Building Code, Plumbing Code and Electrical Code.*

1123B.2 Work Stations. *Specific work stations need only comply with aisle width (Sections 1133B.6.1 and 1133B.6.2) and floors and levels (Section 1120B), and entryways shall be 32 inches (813 mm) in clear width.*

> ***EXCEPTION:*** *Accessibility is not required to (1) observation galleries used primarily for security purposes; or (2) in nonoccupiable spaces accessed only by ladders, catwalks, crawl spaces, very narrow passageways, or freight (nonpassenger) elevators, and frequented only by service personnel for repair purposes; such spaces include, but are not limited to, elevator pits, elevator penthouses, mechanical rooms, piping or equipment catwalks.*

SECTION 1124B – GROUND AND FLOOR SURFACES

1124B.1 General. *Ground and floor surfaces along accessible routes and in accessible rooms and spaces, including floors, walks, ramps, stairs and curb ramps, shall be stable, firm, slip resistant, and shall comply with this section.*

1124B.2 Changes in Level. *Changes in level up to 1/4 inch (6 mm) vertical and without edge treatment [see Figure 11B-5E (c) and (d)]. Changes in level between 1/4 inch (6 mm) and 1/2 inch (12.7 mm) shall be accomplished by means of a ramp that complies with Figure 11B-5E (d).*

1124B.3 Carpet. *If carpet or carpet tile is used on a ground or floor surface, then it shall be securely attached; have a firm cushion, pad or backing or no cushion or pad; and have a level loop, textured loop; level-cut pile, or level-cut/uncut pile texture. The maximum pile height shall be 1/2 inch (12.7 mm). Exposed edges of carpet shall be fastened to floor surfaces and have trim along the entire length of the exposed edge. Carpet edge trim shall comply with Section 1124B.2.*

1124B.4 Gratings. *If gratings are located in walking surfaces, then they shall have spaces no greater than 1/2 inch (12.7 mm) wide in one direction (see Figure 11B-7B). If gratings have elongated openings, then they shall be placed so that the long dimension is perpendicular to the dominant direction of travel (see Figure 11B-7B).*

SECTION 1125B – STORAGE

1125B.1 General. *If fixed storage facilities such as cabinets, shelves, closets or drawers are provided where access is required by Section 101.17.11, at least one of each type shall comply with this section. Additional storage may be provided outside of the reach ranges shown in Figure 11B-5D.*

1125B.2 Clear Floor Space. *A clear floor space at least 30 inches by 48 inches (762 mm by 1219 mm) complying with Section 1118B.4 that allows either a forward or parallel approach by a person using a wheelchair shall be provided at accessible storage facilities.*

1125B.3 Height. *Accessible storage spaces shall be within at least one of the reach ranges specified in Sections 1118B.5 and 1118B.6. Clothes rods shall be a maximum of 54 inches (1372 mm) from the floor for a side approach (See Figure 11B-5D). Where the distance from the wheelchair to the clothes rod or shelf exceeds 10 inches (254 mm), as in closets without accessible doors, the height and depth to the rod or shelf shall comply with Figure 11B-5D.*

1125B.4 Hardware. *Hardware for accessible storage facilities shall comply with Section 1117B.6. Touch latches and U-shaped pulls are acceptable.*

SECTION 1126B – VENDING MACHINES *Install vending machines in compliance with Section 1117B.6, "Controls and Operating Mechanisms."*

Division II – SITE ACCESSIBILITY

SECTION 1127B – EXTERIOR ROUTES OF TRAVEL

1127B.1 General. *Site development and grading shall be designed to provide access to all entrances and exterior ground floor exits, and access to normal paths of travel, and where necessary to provide access, shall incorporate pedestrian ramps, curb ramps, etc. When more than one building or facility is located on a site, accessible routes of travel shall be provided between buildings and accessible site facilities. The accessible route of travel shall be the most practical direct route between accessible building entrances, accessible site facilities and the accessible entrance to the site.*

> ***EXCEPTIONS:***
> ***1.*** *Where the enforcing agency determines that compliance with these regulations would create an unreasonable hardship because of topography, natural barriers, etc., an exception may be granted when equivalent facilitation is provided through the use of other methods and materials.*
>
> ***2.*** *In existing buildings, this section shall not apply in those conditions where, due to legal or physical constraints, the site of the project would not allow compliance with these regulations or equivalent facilitation without creating an unreasonable hardship.*
>
> ***NOTE:*** *See Section 101.17.11, *****Item 4.*

1127B.2 Design and Construction. *When accessibility is required by this section, it shall be designed and constructed in accordance with this Building Code. See Section 1114B.1 for a list of applicable sections.*

1127B.3 Signs. *At every primary public entrance and at every major junction along or leading to an accessible route of travel, there shall be a sign displaying the international symbol of accessibility. Signs shall indicate the direction to accessible building entrances and facilities and shall comply with the requirements found in Sections 1117B.5 through 1117B.5.9.*

1127B.4 Outside Stairways. *Where stairways occur outside a building, refer to Sections 1006.17 of the 1995 California Building Code, 1120A.4.3 and 1133B.4.4.*

1127B.5 Curb Ramps.

1. General. *Curb ramps shall be constructed at each corner of street intersections and where a pedestrian way crosses a curb. The preferred and recommended location for curb ramps is in the center of the crosswalk of each street corner. Where it is necessary to locate a curb ramp in the center of the curb return and the street surfaces are marked to identify pedestrian crosswalks, the lower end of the curb ramp shall terminate within such crosswalk areas. See Figure 11B-20C, Case E.*

2. Width of curb ramps. *Curb ramps shall be a minimum of 4 feet (1219 mm) in width and shall lie, generally, in a single sloped plane, with a minimum of surface warping and cross slope.*

3. Slope of curb ramps. *The slope of curb ramps shall not exceed 1 unit vertical to 12 units horizontal (8.33% slope). Transitions from ramps to walks, gutters, or streets shall be flush and free of abrupt changes, except that curb ramps shall comply with Item 5 below. Maximum slopes of adjoining gutters, road surface immediately adjacent to the curb ramp, or accessible route shall not exceed 1 unit vertical to 20 units horizontal (5% slope) within 4 feet (1219 mm) of the top and bottom of the curb ramp. The slope of the fanned or flared sides of curb ramps shall not exceed 1 unit vertical to 10 units horizontal (10% slope).*

4. Level landing. *A level landing 4 feet (1219 mm) deep shall be provided at the upper end of each curb ramp over its full width to permit safe egress from the ramp surface, or the slope of the fanned or flared sides of the curb ramp shall not exceed 1 unit vertical to 12 units horizontal (8.33% slope).*

5. Beveled lip. *The lower end of each curb ramp shall have a 1/2 inch (13 mm) lip beveled at 45 degrees as a detectable way finding edge for persons with visual impairment.*

***** In 1127B.1 (General) in the Note the cross-reference to 'Section 101.17.11, Item 4' is incorrect. Cross-reference should read Item 5. This will be submitted for correction in Rulemaking.

6. Finish. *The surface of each curb ramp and its flared sides shall be stable, firm and slip-resistant and shall be of contrasting finish from that of the adjacent sidewalk.*

7. Border. *All curb ramps shall have a grooved border 12 inches (305 mm) wide at the level surface of the sidewalk along the top and each side approximately 3/4 inch (19 mm) on center. All curb ramps constructed between the face of the curb and the street shall have a grooved border at the level surface of the sidewalk. See Figures 11B-19A and 11B-19B.*

8. Detectable warnings. *A curb ramp shall have a detectable warning that extends the full width and depth of the curb ramp inside the grooved border when the ramp slope is less than 1 unit vertical to 15 units horizontal (6.7% slope). Detectable warnings shall consist of raised truncated domes with a diameter of nominal 0.9 inch (22.9 mm) at the base tapering to 0.45 inch (11.4 mm) at the top, a height of nominal 0.2 inch (5.08 mm) and a center-to-center spacing of nominal 2.35 inches (59.7 mm) in compliance with Figure 11B-23A. "Nominal" here shall be in accordance with Section 12-11A and B-102, State Referenced Standards Code. The detectable warning shall contrast visually with adjoining surfaces, either light-on-dark or dark-on-light. The material used to provide contrast shall be an integral part of the walking surface. The domes may be constructed in a variety of methods, including cast in place or stamped, or may be part of a prefabricated surface treatment.*

Only approved DSA/AC detectable warning products and directional surfaces shall be installed as provided in the California Code of Regulations (CCR), Title 24, Part 1, Articles 2, 3 and 4. Refer to CCR Title 24, Part 12, Chapter 12-11A and B, for building and facility access specifications for product approval for detectable warning products and directional surfaces.

> ***NOTE:*** *Detectable warning products and directional surfaces installed after January 1, 2001, shall be evaluated by an independent entity, selected by the Department of General Services, Division of the State Architect-Access Compliance for all occupancies, including transportation and other outdoor environments, except that when products and surfaces are for use in residential housing evaluation shall be in consultation with the Department of Housing and Community Development. See Government Code Section 4460.*

9. Obstructions. *Curb ramps shall be located or protected to prevent their obstruction by parked cars.*

10. Diagonal curb ramps. *If diagonal (or corner-type) curb ramps have returned curbs or other well-defined edges, such edges shall be parallel to the direction of pedestrian flow. The bottom of diagonal curb ramps shall have 48 inches (1219 mm) minimum clear space as shown in Figure 11B-22 (c) and (d). If diagonal curb ramps are provided at marked crossings, the 48-inch (1219 mm) clear space shall be within the markings (see Figure 11B-20B, Cases C and D). If diagonal curb ramps have flared sides, they shall also have at least a 24-inch-long (610 mm) segment of straight curb located on each side of the curb ramp and within the marked crossing [see Figure 11B-22 (c)].*

> ***NOTES:***
> ***1.*** *For additional curb details, see Figures 11B-19A and 11B-19B.*
>
> ***2.*** *If distance from curb to back of sidewalk is too short to accommodate ramp and a 4-foot (1219 mm) platform as in Figure 11B-20A,Case A, the side walk may be depressed longitudinally as in Figure 11B-20A, Case B, or Figure 11B-20B, Case C, or may be widened as in Figure 11B-20B, Case D.*
>
> ***3.*** *If sidewalk is less than 5 feet (1524 mm) wide, the full width of the sidewalk shall be depressed as shown in Figure 11B-20B, Case C.*
>
> ***4.*** *As an alternate to Figure 11B-20A, Case A, one ramp may be placed in the center of the curb return as in Figure 11B-20C, Case E.*
>
> ***5.*** *When ramp is located in center of curb return, crosswalk configuration must be similar to that shown on the plan to accommodate wheelchairs. (See Figure 11B-22.)*
>
> ***6.*** *If planting area width is equal to or greater than ramp length, ramp side slope distance equals 3 feet (914 mm). (See Figure 11B-20D, Case G.)*
>
> ***7.*** *For Figure 11B-20C, Case F and Figure 11B-20D, Case G, the longitudinal portion of the sidewalk may need to be depressed as shown in Figure 11B-20A, Case B.*
>
> ***8.*** *If located on a curve, the sides of the ramp need not be parallel, but the minimum width of the ramp shall be 4 feet (1219 mm).*
>
> ***9.*** *The ramp shall have a 12 inch-wide (305 mm) border with 1/4 inch (6 mm) grooves approximately 3/4 inch (19 mm) on center. See grooving detail, Figure 11B-20 D, Case H.*

SECTION 1128B – PEDESTRIAN GRADE SEPARATIONS (OVERPASSES AND UNDERPASSES)

Pedestrian ramps on pedestrian grade separations shall comply with the requirements of Section 1133B.5 for ramps.

Cross slopes of walking surfaces shall be the minimum possible and shall not exceed 1/4 inch (6 mm) per foot (2.083% gradient). The slope of any appreciably warped walking surface shall not exceed 1 unit vertical in 12 units horizontal (8.33% slope) in any direction. Where pedestrian grade separations cross streets or other vehicular traffic ways, and where a street level crossing can reasonably and safely be used by persons with physical disabilities, there shall be provided conforming curb ramps and a usable pathway.

EXCEPTIONS:

1. *When the grade differential of the walking surface of a pedestrian grade separation exceeds 14 feet (4267 mm) due to required height clearance and grade conditions, and the enforcing agency finds that because of right-of-way restrictions, topography or natural barriers, wheelchair accessibility or equivalent facilitation would create an unreasonable hardship, such accessibility need not be provided. However, the requirements in these regulations relating to other types of mobility shall be complied with.*

2. *For existing facilities, this section shall not apply where, due to legal or physical constraints, the site of the project will not allow compliance with these regulations or equivalent facilitation without creating an unreasonable hardship.*

NOTE: *See Section 101.17.11, *****Item 4.*

SECTION 1129B – ACCESSIBLE PARKING REQUIRED

1129B.1 General. *Each lot or parking structure where parking is provided for the public as clients, guests or employees, shall provide accessible parking as required by this section. Accessible parking spaces serving a particular building shall be located on the shortest accessible route of travel from adjacent parking to an accessible entrance. In parking facilities that do not serve a particular building, accessible parking shall be located on the shortest accessible route of travel to an accessible pedestrian entrance of the parking facility. In buildings with multiple accessible entrances with adjacent parking, accessible parking spaces shall be dispersed and located closest to the accessible entrances. Table 11B-6 establishes the number of accessible parking spaces required.*

EXCEPTION: *This subsection shall not apply to existing facilities where compliance with local ordinances precludes satisfying the above requirements or of providing equivalent facilitation unless a change of occupancy occurs.*

1129B.2 Less Than Five Spaces. *When less than five parking spaces are provided at buildings and facilities subject to these regulations, one shall be 14 feet (4267 mm) wide and lined to provide a 9-foot (2743 mm) parking area and a 5-foot (1524 mm) loading and unloading area. However, there is no requirement that the space be reserved exclusively or identified for use by persons with disabilities only.*

1129B.3 Medical Care Outpatient Facilities. *At facilities providing medical care and other services for persons with mobility impairments, parking spaces complying with this section shall be provided in accordance with Table 11B-6 except as follows:*

1. Outpatient units and facilities. *Ten percent of the total number of parking spaces provided serve each such outpatient unit or facility.*

2. Units and facilities that specialize in treatment or services for persons with mobility impairments. *Twenty percent of the total number of parking spaces provided serve each such unit or facility.*

***** In 1128B (Pedestrian Grade Separations (Overpasses and Underpasses)) in the Note the cross-reference to 'Section 101.17.11, Item 4' is incorrect. Cross-reference should read Item 5. This will be submitted for correction in Rulemaking.

TABLE 11B-6 – SPACES REQUIRED
Establishes the number of accessible parking spaces required.

TOTAL NUMBER OF PARKING SPACES IN LOT OR GARAGE	MINIMUM REQUIRED NUMBER OF SPACES
1-25	*1*
26-50	*2*
51-75	*3*
76-100	*4*
101-150	*5*
151-200	*6*
201-300	*7*
301-400	*8*
401-500	*9*
501-1,000	*
1,001 and over	**

**Two percent of total.*
***Twenty plus one for each 100, or fraction over 1,001.*

1129B.4 Parking Space Size. *Accessible parking spaces shall be located as near as practical to a primary entrance and shall be sized as follows:*

1. Dimensions. *Where single spaces are provided, they shall be 14 feet (4267 mm) wide and outlined to provide a 9-foot (2743 mm) parking area and a 5-foot (1524 mm) loading and unloading access aisle on the passenger side of the vehicle. When more than one space is provided in lieu of providing a 14-foot-wide (4267 mm) space for each parking space, two spaces can be provided within a 23-foot-wide (7010 mm) area lined to provide a 9-foot (2743 mm) parking area on each side of a 5-foot (1524 mm) loading and unloading access aisle in the center. The minimum length of each parking space shall be 18 feet (5486 mm). The words NO PARKING shall be painted on the ground within each five-foot (1524 mm) loading and unloading access aisle. This notice shall be painted in white letters no less than 12 inches (154 mm) high and located so that it is visible to traffic enforcement officials. See Figure 11B-18A.*

2. Van space(s). *One in every eight accessible spaces, but not less than one, shall be served by an access aisle 96 inches (2438 mm) wide minimum placed on the side opposite the driver's side when the vehicle is going forward into the parking space and shall be designated van accessible as required by Section 1129B.5. All such spaces may be grouped on one level of a parking structure. The words NO PARKING shall be painted on the ground within each eight-foot (2438 mm) loading and unloading access aisle. This notice shall be painted in white letters no less than 12 inches (154 mm) high and located so that it is visible to traffic enforcement officials. See Figure 11B-18B.*

3. Arrangement of parking space. *In each parking area, a bumper or curb shall be provided and located to prevent encroachment of cars over the required width of walkways. Also, the space shall be so located that persons with disabilities are not compelled to wheel or walk behind parked cars other than their own. Pedestrian ways which are accessible to persons with disabilities shall be provided from each such parking space to related facilities, including curb cuts or ramps as needed. Ramps shall not encroach into any accessible parking space or the adjacent access aisle. This maximum cross slope in any direction of an accessible parking space and adjacent access aisle shall not exceed 2%.*

EXCEPTIONS: *See Figures 11B-18A through 11B-18C.*

1. *Where the enforcing agency determines that compliance with any regulation of this section would create an unreasonable hardship, a variance or waiver may be granted when equivalent facilitation is provided.*

2. *Parking spaces may be provided which would require a person with a disability to wheel or walk behind other than accessible parking spaces when the enforcing agency determines that compliance with these regulations or providing equivalent facilitation would create an unreasonable hardship.*

NOTE: *See Section 101.17.11, *Item 4.*

* In 1129B.4 (Parking Space Size) #3 in the Note, the cross-reference to 'Section 101.17.11, Item 4' is incorrect. Cross-reference should read Item 5. This will be submitted for correction in Rulemaking.

4. Slope of parking space. *Surface slopes of accessible parking spaces shall be the minimum possible and shall not exceed 1 unit vertical to 50 units horizontal (2% slope) in any direction.*

1129B.5 Identification of Parking Spaces for Off-Street Parking Facilities. *Each parking space reserved for persons with disabilities shall be identified by a reflectorized sign permanently posted immediately adjacent to and visible from each stall or space, consisting of a profile view of a wheelchair with occupant in white on dark blue background. The sign shall not be smaller than 70 square inches (4516 mm2) in area and, when in a path of travel, shall be posted at a minimum height of 80 inches (2032 mm) from the bottom of the sign to the parking space finished grade. Signs may also be centered on the wall at the interior end of the parking space at a minimum height of 36 inches (914 mm) from the parking space finished grade, ground or sidewalk. Spaces complying with Section 1129B.4, Item 2 shall have an additional sign stating "Van-Accessible" mounted below the symbol of accessibility.*

An additional sign shall also be posted in a conspicuous place at each entrance to off-street parking facilities, or immediately adjacent to and visible from each stall or space. The sign shall not be less than 17 inches by 22 inches (432 mm by 559 mm) in size with lettering not less than 1 inch (25 mm) in height, which clearly and conspicuously states the following:

"Unauthorized vehicles parked in designated accessible spaces not displaying distinguishing placards or license plates issued for persons with disabilities may be towed away at owner's expense. Towed vehicles may be reclaimed at _____ _____ or by telephoning _____."

Blank spaces are to be filled in with appropriate information as a permanent part of the sign.

In addition to the above requirements, the surface of each accessible parking space or stall shall have a surface identification duplicating either of the following schemes:

> ***1.*** *By outlining or painting the stall or space in blue and outlining on the ground in the stall or space in white or suitable contrasting color a profile view depicting a wheelchair with occupant; or*
>
> ***2.*** *By outlining a profile view of a wheelchair with occupant in white on blue background. The profile view shall be located so that it is visible to a traffic enforcement officer when a vehicle is properly parked in the space and shall be 36 inches high by 36 inches wide (914 mm by 914 mm). See Figures 11B-18A through 11B-18C.*

SECTION 1130B – PARKING STRUCTURES

All entrances to and vertical clearances within parking structures shall have a minimum vertical clearance of 8 feet 2 inches (2489 mm) where required for accessibility to accessible parking spaces.

> ***EXCEPTIONS:***
> ***1.*** *Where the enforcing agency determines that compliance with Section 1130B would create an unreasonable hardship, an exception may be granted when equivalent facilitation is provided.*
>
> ***2.*** *This section shall not apply to existing buildings where the enforcing agency determines that, due to legal or physical constraints, compliance with these regulations or equivalent facilitation would create an unreasonable hardship. See Section 101.17.11, *****Item 4.*

SECTION 1131B – PASSENGER DROP-OFF AND LOADING ZONES

1131B.1 Location. *When provided, passenger drop-off and loading zones shall be located on accessible route of travel.*

1131B.2 Passenger Loading Zones.

1. General. *Where provided, one passenger drop-off and loading zone shall provide an access aisle at least 60 inches (1524 mm) wide and 20 feet (6096 mm) long adjacent and parallel to the vehicle pull-up space. Such zones shall be located on a surface with a slope not exceeding 1 unit vertical in 50 units horizontal (2% slope). If there are curbs between the access aisle and the vehicle pull-up space, a curb ramp shall be provided.*

***** In 1130B (Parking Structures) in Exception 2 the cross-reference to 'Section 101.17.11, Item 4' is incorrect. Cross-reference should read Item 5. This will be submitted for correction in Rulemaking.

2. Vertical Clearance. *Provide minimum vertical clearance of 114 inches (2896 mm) at accessible passenger loading zones and along at least one vehicle access route to such areas from site entrances and exits.*

1131B.3 Valet Parking. *Valet parking facilities shall provide a passenger loading zone complying with Section 1131B.2 above and shall be located on an accessible route to the entrance of the facility. The parking space requirements of Sections 1129B through 1130B apply to facilities with valet parking.*

1131B.4 Bus Stop Pads and Shelters. *Where provided, provide bus stop pads 96 inches (2438 mm) long (measured parallel to curb or road edge) to the maximum extent allowed by legal or site constraints. Bus stop pads shall connect to an accessible route. Newly constructed bus stop pads must provide a square curb surface between the pad and road or other detectable warning in accordance with Section 1133B.8.5.*

> ***NOTE:*** *Detectable warning products and directional surfaces installed after January 1, 2001, shall be evaluated by an independent entity, selected by the Department of General Services, Division of the State Architect-Access Compliance, for all occupancies, including transportation and other outdoor environments, except that when products and surfaces are used in residential housing evaluation shall be in consultation with the Department of Housing and Community Development. See Government Code Section 4460.*

Bus stop pads shall be at same slope as roadway in the direction parallel to roadway, and maximum 2 percent slope perpendicular to roadway.

Where provided, provide bus stop shelters installed so as to permit a wheelchair user to enter the shelter and access a clear floor area of 30 by 48 inches (762 mm by 1219 mm), completely within the shelter. Bus stop shelters shall connect to an accessible route and to bus stop pads. Only approved DSA/AC detectable warning products and directional surfaces shall be installed as provided in the California Code of Regulations (CCR), Title 24, Part 1, Articles 2, 3 and 4. Refer to CCR Title 24, Part 12, Chapter 12-11A and B, for building and facility access specifications for product approval for detectable warning products and directional surfaces.

> ***NOTE:*** *Detectable warning products and directional surfaces installed after January 1, 2001, shall be evaluated by an independent entity, selected by the Department of General Services, Division of the State Architect-Access Compliance, for all occupancies, including transportation and other outdoor environments, except that when products and surfaces are for use in residential housing, evaluation shall be in consultation with the Department of Housing and Community Development. See Government Code Section 4460.*

SECTION 1132B – OUTDOOR OCCUPANCIES

1132B.1 General. *Outdoor occupancies shall be accessible as required in this chapter. See also the general requirements listed in Section 1114B.1.1.*

1132B.2 Parks and Recreational Areas. *The following parks and recreational areas shall comply with these regulations.*

> ***EXCEPTIONS:***
> ***1.*** *In existing buildings, when the enforcing agency determines that compliance would create an unreasonable hardship, a variance shall be granted when equivalent facilitation is provided.*
>
> ***2.*** *Where the enforcing agency finds that, in specific areas, the natural environment would be materially damaged by compliance with these regulations, such areas shall be subject to these regulations only to the extent that such material damage would not occur.*
>
> ***3.*** *Automobile access shall not be provided or paths of travel shall not be made accessible when the enforcing agency determines that compliance with these regulations would create an unreasonable hardship.*

1. Campsites. *Campsites, a minimum of two and no fewer than three for each 100 campsites provided, shall be accessible by level path or ramp and shall have travel routes with slopes not exceeding 1 unit vertical in 12 units horizontal (8.33% slope) to sanitary facilities. Permanent sanitary facilities serving campgrounds shall be accessible to wheelchair occupants.*

2. Beaches, picnic areas. *Beaches, picnic areas, day-use areas, vista points and similar areas shall be accessible.*

3. Sanitary facilities. *Sanitary facilities, to the extent that such facilities are provided, each public use area that is accessible to wheelchair occupants by automobile, walks or other paths of travel.*

4. Boat docks. *Boat docks, fishing piers, etc., shall be accessible.*

5. Parking lots. *Parking lots shall be provided with accessible parking spaces and with curb cuts leading to all adjacent walks, paths or trails.*

6. Trails and paths. *Trails, paths and nature walk areas, or portions of these, shall be constructed with gradients which will permit at least partial use by wheelchair occupants. Hard surface paths or walks shall be provided to serve buildings and other functional areas.*

7. Nature trails. *Nature trails and similar educational and informational areas shall be accessible to the blind by the provision of rope guidelines, raised Arabic numerals and symbols for identification, information signs, and related guide and assistance devices.*

NOTE: *For museums, orientation buildings, visitor centers, office buildings, retail stores, restaurants, etc., and sanitary facilities serving these uses, see Sections 1104B through 1111B and sections listed in Section 1114B.1.1.*

1132B.3 Highway Rest Areas. *The specific standards of accessibility for highway rest areas and similar facilities shall be as follows in Section 1132B.3.1, subject to other provisions in these regulations.*

1132B.3.1 Permanent facilities. *At least one kind of permanent functional area or facility, as applicable, shall be accessible to persons with disabilities, including:*

1. *A sanitary facility for each sex.*

2. *At least one picnic table and one additional table for each 20 tables, or fraction thereof provided.*

3. *Information and display areas.*

4. *Drinking fountains.*

5. *At least one parking space.*

6. *Curb ramps conforming to Section 1127B.5 shall be provided at pedestrian ways where appropriate.*

Division III -- ACCESSIBILITY FOR ENTRANCES, EXITS AND PATHS OF TRAVEL

This division includes additional requirements which supersede less restrictive requirements in Chapter 10 where access is required.

SECTION 1133B – GENERAL ACCESSIBILITY FOR ENTRANCES, EXITS AND PATHS OF TRAVEL

1133B.1 Building Accessibility. *See this chapter.*

1133B.1.1 Entrances.

1133B.1.1.1 Entrances *and exterior ground floor exit doors.*

1133B.1.1.1.1 All *entrances and exterior ground-floor exit doors to buildings and facilities shall be made accessible to persons with disabilities. Doorways shall have a minimum clear opening of 32 inches (813 mm) with the door open 90 degrees, measured between the face of the door and the opposite stop. Openings more than 24 inches (610 mm) in depth shall comply with Sections 1118B.1 and 1118B.2.*

> ***EXCEPTIONS:***
> ***1.*** *Exterior ground-floor exits serving smoke-proof enclosures, stairwells and exit doors servicing stairs only need not be made accessible.*
>
> ***2.*** *Exits in excess of those required by Section 1114B.2.1, and which are more than 24 inches (610 mm) above grade are not required to be accessible. Such doors shall have signs warning that they are not accessible. Warning signs shall comply with Section 1117B.5.*
>
> ***3.*** *In existing buildings where the enforcing agency determines that compliance with the building standards of this section would create an unreasonable hardship, an exception shall be granted when equivalent facilitation is provided. Equivalent facilitation would require at least one entrance to be accessible to and usable by persons with disabilities.*
>
> ***4.*** *These building standards shall not apply to existing buildings when legal or physical constraints will not allow compliance with these building standards or equivalent facilitation without creating an unreasonable hardship. See Section 101.17.11,* *******Item 4, Special Conditions for Persons with Disabilities Requiring Appeals Action Ratification.*

1133B.1.1.1.2 Temporary restrictions. *During periods of partial or restricted use of a building or facility, the entrances used for primary access shall be accessible to and usable by persons with disabilities.*

1133B.1.1.1.3 Recessed doormats. *Recessed doormats shall be adequately anchored to prevent interference with wheelchair traffic.*

1133B.1.1.1.4 Gates. *All gates, including ticket gates, shall meet all applicable specifications for doors.*

1133B.2 Doors.

1133B.2.1 Type of lock or latch. *See Chapter 10, Section 1003.3.1.8.*

1133B.2.2 Width and height. *Every required exit doorway shall be of a size as to permit the installation of a door not less than 3 feet (914 mm) in width and not less than 6 feet 8 inches (2032 mm) in height.*

When installed in exit doorways, exit doors shall be capable of opening at least 90 degrees and shall be so mounted that the clear width of the exitway is not less than 32 inches (813 mm). In computing the exit width the net dimension of the exitway shall be used.

1133B.2.3 Hinged doors. *For hinged doors, the opening width shall be measured with the door positioned at an angle of 90 degrees from its closed position.*

***** In 1133B.1.1.1.1 in Exception 4 the cross-reference to 'Section 101.17.11, Item 4' is incorrect. Cross-reference should read Item 5. This will be submitted for correction in Rulemaking.

1133B.2.3.1 Pairs of doors. *Where a pair of doors is utilized, at least one of the doors shall provide a clear, unobstructed opening width of 32 inches (813 mm) with the leaf positioned at an angle of 90 degrees from its closed position.*

1133B.2.3.2 Automatic doors. *When an automatic door operator is utilized to operate a pair of doors, at least one of the doors shall provide a clear, unobstructed opening width of 32 inches (813 mm) with the door positioned at an angle of 90 degrees from its closed position.*

> ***EXCEPTIONS:***
> ***1.*** *The provisions of Section 1133B.2.3 shall not apply to existing buildings, except when otherwise required under conditions applicable to access for persons with disabilities. In existing buildings, the following shall apply:*
>
> *Where the occupant load is less than 10, except Group I, Division 1 Occupancies, doorways may be 30 inches (762 mm) in clear width.*
>
> *Where occupant load is greater than 10 and it is determined that compliance with Section 1133B.2.3 would create an unreasonable hardship, doorways may be 30 inches (762 mm) in clear width.*
>
> ***2.*** *In existing buildings, the provisions of this section shall not apply when legal or physical constraints will not allow compliance with these building standards or equivalent facilitation without creating an unreasonable hardship. See Section 101.17.11, *****Item 4.*

1133B.2.3.3 Revolving doors. *Revolving doors shall not be used as a required entrance for persons with disabilities.*

1133B.2.3.4 Turnstiles, rails and pedestrian controls. *Where turnstiles and crowd control barriers are utilized in a facility for the purpose of providing fully controlled access, such as where an admission price is charged, a door or gate that is accessible to persons with disabilities shall be provided adjacent to each turnstile exit or entrance. This alternate passageway shall be maintained in an unlocked condition during business hours and the door or gate shall not activate a publicly audible alarm system. The door or gate may be latched where all gates are restricted and controlled by an attendant and a sign is posted stating, .all gates are restricted and controlled by an attendant. The accessible door or gate shall provide the same use pattern. Where posts, rails or other pedestrian controls are utilized to create crowd control aisles or lanes, a minimum of one lane shall be accessible and shall provide a minimum aisle width no less than indicated in Figure 11B-5E (a) and (b) with 32 inches (813 mm) of clear opening.*

> ***EXCEPTION:*** *In existing buildings, Section 1133B.2.3 shall not apply when physical constraints or equivalent facilitation will not allow compliance with these building standards without creating an unreasonable hardship. See Section 101.17.11, *****Item 4.*

1133B.2.4 Floor level at doors. *Regardless of the occupant load, there shall be a floor or landing on each side of a door.*

1133B.2.4.1 Thresholds. *The floor or landing shall not be more than ½ inch (12.7 mm) lower than the threshold of the doorway. Change in level between ¼ inch (6 mm) and ½ inch (12.7 mm) shall be beveled with a slope no greater than 1 unit vertical to 2 units horizontal (50% slope). Change in level greater than ½ inch (12.7 mm) shall be accomplished by means of a ramp.*

> ***NOTE:*** *[For DSA/AC] See Section 1133B.5.1.*

1133B.2.4.2 Maneuvering clearances at doors. *Minimum maneuvering clearances at doors shall be as shown in Figure 11B-26A and 11B-26B. The floor or ground area within the required clearances shall be level and clear.*

The level area shall have a length in the direction of door swing of at least 60 inches (1524 mm) and the length opposite the direction of door swing of 48 inches (1219 mm) as measured at right angles to the plane of the door in its closed position.

> ***EXCEPTIONS:***
> ***1.*** *The length opposite the direction of door swing shall be a minimum of 44 inches (1118 mm) where the door has no closer and approach to the door by a person in a wheelchair can be made from the latch side, or if the door has neither latch nor closer and approach can be made from the hinge side. See Figure 11B-26A and 11B-26B.*
>
> ***2.*** *In Group R Occupancies, the level area shall have a length both in the direction of door swing and opposite the direction of door swing of 44 inches (1118 mm) as measured at right angles to the plane of the door in its closed position.*

***** In 1133B.2.3.2 (Automatic doors) in Exception 2 the cross-reference to 'Section 101.17.11, Item 4' is incorrect. Cross-reference should read Item 5. This will be submitted for correction in Rulemaking.

1133B.2.4.3 *The width of the level area on the side to which the door swings shall extend 24 inches (610 mm) past the strike edge of the door for exterior doors and 18 inches (457 mm) past the strike edge for interior doors.*

> ***NOTE:*** *Twenty-four inches (610 mm) is preferred for strike-side clearance.*

1133B.2.4.4 *The space between two consecutive door openings in a vestibule, serving other than a required exit stairway shall provide a minimum of 48 inches (1219 mm) of clear space from any door opening into such vestibule when the door is positioned at an angle of 90 degrees from its closed position. Doors in a series shall swing either in the same direction or away from the space between the doors.*

1133B.2.4.5 *Where a door required to be accessible by Section 1133B.1.1.1 is located in a recess or alcove where the distance from the face of the wall to the face of the door is greater than 8 inches, strike side clearances as prescribed in Section 1133B.2.4.3 shall be provided. See Figure 11B-33(a).*

1133B.2.5 Closer-effort to operate doors. *Maximum effort to operate doors shall not exceed 5 pounds (38 N) for exterior and interior doors, such pull or push effort being applied at right angles to hinged doors and at the center plane of sliding or folding doors. Compensating devices or automatic door operators may be utilized to meet the above standards. When fire doors are required, the maximum effort to operate the door may be increased to the minimum allowable by the appropriate administrative authority, not to exceed 15 pounds (66.72 N).*

1133B.2.5.1 Door closer. *If the door has a closer, then the sweep period of the closer shall be adjusted so that from an open position of 70 degrees, the door will take at least 3 seconds to move to a point 3 inches (75 mm) from the latch, measured to the landing edge of the door.*

1133B.2.5.2 Hand*-activated door opening hardware shall be centered between 30 inches (762 mm) and 44 inches (1118 mm) above the floor. Latching and locking doors that are hand-activated and which are in a path of travel shall be operable with a single effort by lever-type hardware, panic bars, push-pull activating bars or other hardware designed to provide passage without requiring the ability to grasp the opening hardware. Locked exit doors shall operate as above in egress direction. Doors to individual hotel or motel units shall operate similarly, except that when a bolt and unlatching operation is key operated from corridor or exterior side of unit door, large bow keys 2 inches (51 mm) (full bow) or 1-¼ inches (32 mm) (half bow) shall be provided in lieu of lever-type hardware on the corridor side. Separate deadlock activation on room side of corridor doors in hotels or motels shall have lever handle or large thumb turn on an easily reached location.*

1133B.2.5.3 Recessed doors. *Where the plane of the doorway is offset 8 or more inches (205 mm) from any obstruction within 18 inches (455 mm) measured laterally on the latch side, the door shall be provided with maneuvering clearance for front approach. See Figure 11B.33(a).*

1133B.2.6 Smooth surface. *The bottom 10 inches (254 mm) of all doors except automatic and sliding shall have a smooth, uninterrupted surface to allow the door to be opened by a wheelchair footrest without creating a trap or hazardous condition. Where narrow frame doors are used, a 10-inch (254 mm) high smooth panel shall be installed on the push side of the door, which will allow the door to be opened by a wheelchair footrest without creating a trap or hazardous condition.*

1133B.3 Corridors, Hallways and Exterior Exit Balconies.

1133B.3.1 Corridor and hallway widths. *Every corridor and hallway serving an occupant load of 10 or more shall not be less than 44 inches (1118 mm) in width. Corridors and hallways serving an occupant load of less than 10 shall not be less than 36 inches (914 mm) in width.*

1133B.3.2 Corridors and hallways over 200 feet (60 960 mm). *Corridors and hallways that are located on an accessible route and exceed 200 feet (60 960 mm) in length shall have a minimum clear width of 60 inches (1524 mm) clear width, then passing spaces at least 60 inches by 60 inches (1524mmby 1524 mm) shall be located at reasonable intervals not to exceed 200 feet (60 960 mm). A "T" intersection of two corridors or walks is an acceptable passing place.*

> ***EXCEPTIONS:***
> ***1.*** *In existing buildings, when the enforcing agency determines that compliance with any building standard under this section would create an unreasonable hardship, an exception to such building standard shall be granted when equivalent facilitation is provided.*

*2. In existing buildings, the provisions of this section shall not apply when legal or physical constraints will not allow compliance with these building standards or equivalent facilitation without creating an unreasonable hardship. See Section 101.17.11, *Item 4.*

1133B.4 Stairways.

1133B.4.1 Handrails.

1133B.4.1.1 Required handrails. *Stairways shall have handrails on each side, and every stairway required to be more than 88 inches (2235 mm) in width shall be provided with not less than one intermediate handrail for each 88 inches (2235 mm) of required width.*

Intermediate handrails shall be spaced approximately equally across with the entire width of the stairway.

EXCEPTIONS:
1. *Stairways serving one individual dwelling unit in Group R, Division 1 or 3 Occupancies may have one handrail, except that stairways open on one or both sides shall have handrails on the open side or sides.*

2. *Private stairways 30 inches (762 mm) or less in height may have handrails on one side only.*

1133B.4.2 Handrail configuration.

1133B.4.2.1 Handrails *shall be 34 to 38 inches (864 to 965 mm) above the nosing of the treads.*

1133B.4.2.2 Handrails *shall extend a minimum of 12 inches (305 mm) beyond the top nosing and 12 inches (305 mm), plus the tread width, beyond the bottom nosing.*

1133B.4.2.3 Ends *shall be returned or shall terminate in newel posts or safety terminals.*

1133B.4.2.4 Where *the extension of the handrail in the direction of the stair run would create a hazard, the termination of the extension shall be made either rounded or returned smoothly to floor, wall or post. Where the stairs are continuous from landing to landing, the inner rail shall be continuous and need not extend out into the landing.*

1133B.4.2.5 Handrails *projecting from a wall shall have a space of 1-½ inches (38 mm) between the wall and the handrail.*

Handrails may be located in a recess if the recess is a maximum of 3 inches (76 mm) deep and extends at least 18 inches (457 mm) above the top of the rail. Handrails shall not rotate in their fittings.

1133B.4.2.6 Handgrips.

1133B.4.2.6.1 The *handgrip portion of handrails shall be not less than 1-¼ inches (32 mm) nor more than 1-½ inches (38 mm) in cross-sectional nominal dimension or the shape shall provide an equivalent gripping surface. The handgrip portion of handrails shall have a smooth surface with no sharp corners. Gripping surfaces (top or sides) shall be uninterrupted by newel posts, other construction elements or obstructions. Any wall or other surface adjacent to the handrail shall be free of sharp or abrasive elements. Edges shall have a minimum radius of 1/8 inch (3.2 mm).*

EXCEPTIONS:
1. *In existing buildings when the enforcing agency determines that compliance with any requirement under Section 1133B.4.2 would create an unreasonable hardship, an exception to the requirement for persons with disabilities may be granted when equivalent facilitation is provided.*

2. *These regulations shall not apply in existing buildings where legal or physical constraints will not allow compliance with these regulations or equivalent facilitation without creating an unreasonable hardship. See Section 101.17.11, **Item 4.*

1133B.4.2.6.2 The *orientation of at least one handrail shall be in the direction of the run of the stair and perpendicular to the direction of the stair nosing, and shall not reduce the minimum required width of the stairs.*

***** In 1133B.3.2 (Corridors and hallways over 200 feet (60 960 mm)) in Exception 2 the cross-reference to 'Section 101.17.11, Item 4' is incorrect. Cross-reference should read Item 5.
****** In 1133B.4.2.6.1 in Exception 2 the cross-reference to 'Section 101.17.11, Item 4' is incorrect. Cross-reference should read Item 5. Footnotes will be submitted for correction in Rulemaking.

1133B.4.3 Tactile stair level identification sign. *Tactile stair level identification signs that comply with *****1117B.1-B shall be located at each floor level landing in all enclosed stairways in buildings two or more stories in height to identify the floor level. At exit discharge level, the sign shall include a raised five pointed star located to the left of the identifying floor level. The outside diameter of the star shall be the same as the height of the raised characters.*

1133B.4.4 Striping for the visually impaired. *The upper approach and the lower tread of each stair shall be marked by a strip of clearly contrasting color at least 2 inches (51 mm) wide placed parallel to and [not more than 1 inch (25.4 mm) from] the nose of the step or landing to alert the visually impaired. The strip shall be of material that is at least as slip resistant as the other treads of the stair.*

Where stairways occur outside a building, the upper approach and all treads shall be marked by a strip of clearly contrasting color at least 2 inches (51 mm) wide and placed parallel to and not more than 1 inch (25.4 mm) from the nose of the step or landing to alert the visually impaired. The strip shall be of a material that is at least as slip resistant as the other treads of the stair. A painted strip shall be acceptable.

1133B.4.5 Treads, nosing and risers.

1133B.4.5.1 Treads. *All tread surfaces shall be slip resistant. Weather-exposed stairs and their approaches shall be designed so that water will not accumulate on the walking surfaces. Treads shall have a smooth, rounded or chamfered exposed edges, and no abrupt edges at the nosing (lower front edge).*

1133B.4.5.2 Nosing. *Nosing shall not project more than 1-½ inch (38 mm) past the face of the riser below.*

1133B.4.5.3 Open risers are not permitted. *On any given flight of stairs, all steps shall have uniform riser height and uniform tread widths consistent with Section 1133B.4. Stair treads shall be no less than 11 inches (279 mm) deep, measured from riser to riser See Figure 11B-35. Risers shall be sloped or the underside of the nosing shall have an angle not less than 60 degrees from the horizontal.*

> ***EXCEPTIONS:***
> *1. In existing buildings, when the enforcing agency determines that compliance with any requirement under this section would create an unreasonable hardship, an exception to persons with disabilities requirements may be granted when equivalent facilitation is provided.*
>
> ***2.*** *These regulations shall not apply to existing buildings when legal or physical constraints will not allow compliance with these regulations or equivalent facilitation without creating an unreasonable hardship. See Section 101.17.11, ******Item 4.*

1133B.5 Ramps.

1133B.5.1 General. *Ramps used as exits shall conform to the provisions of this section. Any path of travel shall be considered a ramp if its slope is greater than 1 foot (305 mm) rise in 20 feet (6096 mm) of horizontal run (5% gradient). The least possible slope shall be used for any ramp.*

1133B.5.2 Width. *The width of ramps shall be as required for stairways and exits.*

1133B.5.2.1 Widths as for exits. *The width of ramps shall be as required for stairways and exits. Pedestrian ramps shall have a minimum width of 48 inches (1219 mm).*

1133B.5.2.2 Entrance and special occupancy. *Pedestrian ramps serving entrances to buildings where the ramp is the only exit discharge path ***or serves an occupant load of 300 or more shall have a minimum clear width of 60 inches (1524 mm). Ramps serving Group R Occupancies may be 36 inches (914 mm) clear width when the occupant load is 50 or less.*

***** In 1133B.4.3 (Tactile stair level identification sign) the cross-reference to '1117B.1-B is incorrect. Cross-reference should read Section 1117B.5.1 Item 2.
****** In 1133B.4.5.3 (Open risers are not permitted) in Exception 2 the cross-reference to 'Section 101.17.11, Item 4' is incorrect. Cross-reference should read Item 5.
*** In 1133B.5.2.2 incorrect grammar was adopted during the 2001 code adoption cycle. 1133B.5.2.2 was amended, at that time with the goal, to restate that when there is an occupant load of 300 or more and if the ramp is the only exit path, the ramp should be wider to accommodate the increased occupant load and to function as a combined exit path for all occupants. In the 1st line correct the word 'or' to read 'and' serves. Footnotes will be submitted for correction in Rulemaking.

1133B.5.3 Slope. *The maximum slope of a ramp that serves any exit way, provides access for persons with physical disabilities or is in the path of travel shall be 1-foot (305 mm) rise in 12 feet (3658 mm) of horizontal run (8.3% gradient).*

1133B.5.3.1 *The cross slope of ramp surfaces shall be no greater than 1 unit vertical in 50 units horizontal (2% slope).*

1133B.5.4 Landings. *Level ramp landings shall be installed as follows:*

1133B.5.4.1 Location of landings. *Level ramp landings shall be provided at the top and bottom of each ramp. Intermediate landings shall be provided at intervals not exceeding 30 inches (762 mm) of vertical rise and at each change of direction. Landings are not considered in determining the maximum horizontal distance of each ramp. Landing shall be level as specified in the definition of "level area" in *****Section 202.*

NOTE: *Examples of ramp dimensions are as follows:*

SLOPE	MAXIMUM RISE (Inches)	MAXIMUM HORIZONTAL PROJECTION (feet)
	(x 25.4 for mm)	(x 304.8 for mm)
1:12	30	30
1:16	30	40
1:20	30	50
1:15	30	37.5

1133B.5.4.2 Size of top landings. *Top landings shall be not less than 60 inches (1524 mm) wide and shall have a length of not less than 60 inches (1524 mm) in the direction of ramp run.*

1133B.5.4.3 Encroachment of doors. *See Section ******1133B.5.4.1.*

1133B.5.4.4 Strike edge extension. *The width of the landing shall extend 24 inches (610 mm) past the strike edge of any door or gate for exterior ramps and 18 inches (457 mm) past the strike edge for interior ramps.*

1133B.5.4.5 Landing width. *At bottom and intermediate landings, the width shall be at least the same as required for the ramps.*

1133B.5.4.6 Change of direction. *Intermediate and bottom landings at a change of direction in excess of 30 degrees shall have a dimension in the direction of ramp run of not less than 72 inches (1829 mm) to accommodate the handrail extension.*

1133B.5.4.7 Other intermediate landings. *Other intermediate landings shall have a dimension in the direction of ramp run of not less than 60 inches (1524 mm).*

1133B.5.4.8 For *existing ramps or ramps not covered by Section 1133B.5.4.1, landings shall be provided as set forth in Section 1133B.5.4.1.*

1133B.5.4.9 Hazards. *Required ramps shall have a curb at least 2 inches (51 mm) high, or a wheel guide rail 2 to 4 inches (51 to 102 mm) high on each side of the ramp landing that has a vertical drop exceeding 4 inches (102 mm) and that is not bounded by a wall or fence.*

1133B.5.5 Handrails for ramps.

1133B.5.5.1 Handrails *are required on ramps that provide access if slope exceeds 1 foot (305 mm) rise in 20 feet (6096 mm) of horizontal run (5% gradient), except that at exterior door landings, handrails are not required on ramps less than 6 inches (152 mm) rise or 72 inches (1829 mm) in length. Handrails shall be placed on each side of each ramp, shall be continuous*

***** In 1133B.5.4.1 (Location of landing) the cross-reference to 'Section 202' is incorrect. Cross-reference should read Section 1102B.
****** In 1133B.5.4.3 (Encroachment of doors) the cross-reference to 'Section 1133B.5.4.1' is incorrect, which contains absolutely no information at all regarding the encroachment of doors. Cross-reference should read Section 1003.3.4.4. Footnotes will be submitted for correction in Rulemaking.

the full length of the ramp, shall be 34 to 38 inches (864 to 965 mm) above the ramp surface, shall extend a minimum of 1 foot (305 mm) beyond the top and bottom of the ramp and the ends shall be returned. Handrails projecting from a wall shall have a space of not less than 1-½ inches (38 mm) between the wall and the handrail. Handrails may be located in a recess if the recess is a maximum of 3 inches (76 mm) deep and extends at least 18 inches (457 mm) above the top of the rail.

The grip portion shall not be less than 1-½ inches (32 mm) nor more than 11/2 inches (38 mm), or the shape shall provide an equivalent gripping surface and all surfaces shall be smooth with no sharp corners. Handrails shall not rotate within their fittings. Any wall or other surface adjacent to the handrail shall be free of sharp or abrasive elements. Edges shall have a minimum radius of 1/8 inch (3 mm).

EXCEPTIONS:
1. *Handrails at ramps immediately adjacent to fixed seating in assembly areas are not required.*

2. *Ramps that require handrails and that serve one individual dwelling unit in Group R, Division 1 or 3 Occupancies may have one handrail except that such ramps open on one or both sides shall have handrails provided on the open side or sides.*

3. *Curb ramps do not require handrails.*

1133B.5.5.1.1 Ramp handrails. *Where the extension of the handrail in the direction of the ramp run would create a hazard, the extensions on handrails for ramps shall comply with Section 1133B.4.2.4, or the extension on the handrail may be turned 90 degrees to the run of the ramp.*

1133B.5.6 Wheel guides. *Where the ramp surface is not bounded by a wall or fence and the ramp exceeds 10 feet (3048 mm) in length, the ramp shall comply with one of the following requirements.*

1133B.5.6.1 A *guide curb a minimum of 2 inches (51 mm) in height shall be provided at each side of the ramp; or*

1133B.5.6.2 A *wheel guide rail shall be provided, centered 3 inches (76 mm) plus or minus 1 inch (25 mm) above the surface or the ramp.*

1133B.5.7 Ramps *more than 30 inches (762 mm) above the adjacent ground shall be provided with guardrails as required by this section *****and Section 1003.3.4.6. Such guardrails shall be continuous from the top of the ramp to the bottom of the ramp.*

1133B.5.7.1 Guardrails. *Ramps and landings open on one or both sides shall have guardrails as required by this section.*

1133B.5.7.2 Where required. *Unenclosed floor and roof openings, open and glazed sides of stairways, aisles, landings and ramps, balconies or porches that are more than 30 inches (762 mm) above grade or floor below, and roofs used for other than service of the building shall be protected by a guardrail. Guardrails shall be provided at the ends of aisles where they terminate at a fascia of boxes, balconies and galleries.*

EXCEPTION: *Guardrails need not be provided at the following locations:*

1. *On the loading side of loading docks.*

2. *On the auditorium side of a stage, raised platforms and other raised floor areas such as runways, ramps and side stages used for entertainment or presentation. Along the side of an elevated-walking surface when used for the normal functioning of special lighting or for access and use of other special equipment. At vertical openings in the performance area of stages.*

3. *Along vehicle service pits not accessible to the public.*

***** In 1133B.5.7 cross-reference to 'and Section 1003.3.4.6' is incorrect. Cross-reference should be deleted. This will be submitted for correction in Rulemaking.

1133B.5.7.3 Height. *The top of guardrails shall not be less than 42 inches (1067 mm) in height.*

> ***EXCEPTIONS:***
> ***1.*** *The top of guardrails for Group R, Division 3 and Group U, Division 1 Occupancies and interior guardrails within individual dwelling units, Group R, Division 3 congregate residences and guest rooms of Group R, Division 1 Occupancies may be 36 inches (914 mm) in height.*
>
> ***2.*** *The top guardrails on a balcony immediately in front of the first row of fixed seats and that are not at the end of an aisle may be 26 inches (660 mm) in height.*
>
> ***3.*** *The top of guardrails for stairways, exclusive of their landings, may have a height as specified in Sections 1120A.4.1 and 1133B.4.1.1 for handrails.*

Where an elevation change of 30 inches (762 mm) or less occurs between an aisle parallel to the seats (cross aisle) and the adjacent floor or grade below, guardrails not less than 26 inches (660 mm) above the aisle floor shall be provided.

> ***EXCEPTION:*** *Where the backs of seats on the front of the cross aisle project 24 inches (610 mm) or more above the adjacent floor of the aisle, a *****quardrail need not be provided.*

The top of guardrails at the ends of aisles terminating at the fascia of boxes, balconies and galleries shall extend for the width of the aisle and be no closer than 42 inches (1067 mm) to the closest surface of the aisle where there are steps and 36 inches (914 mm) otherwise.

1133B.5.7.4 Openings. *Open guardrails shall have intermediate rails or an ornamental pattern such that a sphere 4 inches (102 mm) in diameter cannot pass through.*

> ***EXCEPTIONS:***
> ***1.*** *The open space between the intermediate rails or ornamental pattern of guardrails in areas of commercial and industrial-type occupancies that are not accessible to the public may be such that a sphere 12 inches (305 mm) in diameter cannot pass through.*
>
> ***2.*** *The triangular openings formed by the riser, tread and bottom element of a guardrail at the open side of a stairway may be of such size that a sphere 6 inches (152 mm) in diameter cannot pass through.*

For guardrail requirements at grandstands, bleachers or other elevated seating facilities, see Section 1133B.5.7.5.

1133B.5.7.5 Perimeter guardrails. *Perimeter guardrails, enclosing walls or fencing shall be provided for all portions of elevated seating facilities that are more than 30 inches (762 mm) above grade or the floor. Construction of guardrails shall comply with the requirements of Section 1133B.5.7 and Table 16-B. Guardrails shall be 42 inches (1067 mm) in height measured vertically above the leading edge of the tread adjacent walking surface or adjacent seat boards.*

> ***EXCEPTION:*** *Guardrails at the front of the front row of seats that are not located at the end of an aisle and where there is no cross aisle may have a height of 26 inches (660 mm) and need not meet the 4 inch maximum (102 mm) spacing specified in Section 1133B.5.7; however, a midrail shall be installed.*

The open vertical space between footboards and seats shall not exceed 9 inches (229 mm) when footboards are more than 30 inches (762 mm) above grade.

1133B.6 Aisles.

1133B.6.1 General. *Every portion of every building in which are installed seats, tables, merchandise, equipment or similar materials shall be provided with aisles leading to an exit.*

1133B.6.2 Width. *Every aisle shall not be less than 36 inches (914 mm) wide if serving only one side, and not less than 44 inches (1118 mm) wide if serving both sides.*

1133B.7 Walks and Sidewalks.

---

* In 1133B.5.7.3 (Height) in the Exception to the 2nd paragraph the word 'quardrail' is misspelled. The word should read guardrail. This will be submitted for correction in Rulemaking.

1133B.7.1 Continuous surface. *Walks and sidewalks subject to these regulations shall have a continuous common surface, not interrupted by steps or by abrupt changes in level exceeding 1/2 inch (12.7 mm) (see Section *****1133B.7.3), and shall be a minimum of 48 inches (1219 mm) in width. Surfaces shall be slip-resistant as follows:*

1133B.7.1.1 Slopes less than 6 percent. *Surfaces with a slope of less than 6 percent gradient shall be at least as slip-resistant as that described as a medium salted finish.*

1133B.7.1.2 Slopes 6 percent or greater. *Surfaces with a slope of 6 percent gradient shall be slip-resistant.*

1133B.7.1.3 Surface cross slopes. *Surface cross slopes shall not exceed 1/4 inch (6 mm) per foot except when the enforcing agency finds that due to local conditions it creates an unreasonable hardship, the cross slope shall be increased to a maximum of 1/2 inch (12.7 mm) per foot for distances not to exceed 20 feet (6096 mm) (******2.5% gradient).*

> ***EXCEPTION:*** *When, because of right-of-way restrictions, natural barriers or other existing conditions, the enforcing agency determines that compliance with the 48-inch (1219 mm) clear sidewalk width would create an unreasonable hardship, the clear width may be reduced to 36 inches (914 mm).*

1133B.7.2 Gratings. *Walks, sidewalks and pedestrian ways shall be free of gratings whenever possible. For gratings located in the surface of any of these areas, grid openings in gratings shall be limited to 1/2 inch (12.7 mm) in the direction of traffic flow.*

> ***EXCEPTIONS:***
> ***1.*** *Where the enforcing agency determines that compliance with this section would create an unreasonable hardship, an exception may be granted when equivalent facilitation is provided.*
>
> ***2.*** *This section shall not apply in those conditions where, due to legal or physical constraints, the site of the project will not allow compliance with these building standards or equivalent facilitation without creating an unreasonable hardship. See Section 101.17.11, *******Item 4.*

1133B.7.3 Five percent gradient. *When the slope in the direction of travel of any walk exceeds 1 unit vertical to 20 units horizontal (5% gradient), it shall comply with the provisions of Section 1133B.5.*

1133B.7.4 Changes in level. *Abrupt changes in level along any accessible route shall not exceed 1/2 inch (12.7 mm). When changes in level do occur, they shall be beveled with a slope no greater than 1 unit vertical to 2 units horizontal (50%), except that level changes not exceeding 1/4 inch (6 mm) may be vertical.*

When changes in levels greater than 1/2 inch (12.7 mm) are necessary, they shall comply with the requirements for curb ramps.

> ***NOTE:*** *See Section 1127B.5.*

1133B.7.5 Level areas. *Walks shall be provided with a level area not less than 60 inches by 60 inches (1524 mm by 1524 mm) at a door or gate that swings toward the walk, and not less than 48 inches wide by 44 inches (1219 mm by 1118 mm) deep at a door or gate that swings away from the walk. Such walks shall extend 24 inches (610 mm) to the side of the strike edge of a door or gate that swings toward the walk. (For example, see Figure 11B-26B.)*

1133B.7.6 Walks with continuous gradients. *All walks with continuous gradients shall have level areas at least 5 feet (1524 mm) in length at intervals of at least every 400 feet (121 920 mm).*

***** In 1133B.7.1 (Continuous surface) the cross-reference to 'Section 1133B.7.3' is incorrect. Cross-reference should read Section 1133B.7.4.
****** In 1133B.7.1.3 (Surface cross slopes) the cross-reference to '2.5% gradient' is incorrect. Cross-reference should read 4.08% gradient.
******* In 1133B.7.2 (Gratings) in Exception 2 the cross-reference to 'Section 101.17.11, Item 4' is incorrect. Cross-reference should read Item 5.
Footnotes will be submitted for correction in Rulemaking.

1133B.8 Hazards.

1133B.8.1 Warning curbs. *Abrupt changes in level, except between a walk or sidewalk and an adjacent street or driveway, exceeding 4 inches (102 mm) in a vertical dimension, such as at planters or fountains located in or adjacent to walks, sidewalks or other pedestrian ways, shall be identified by curbs projecting at least 6 inches (152 mm) in height above the walk or sidewalk surface to warn the blind of a potential drop off.*

When a guardrail or handrail is provided, no curb is required when a guide rail is provided centered 3 inches (76 mm) plus or minus 1 inch (25 mm) above the surface of the walk or sidewalk, the walk is 5 percent or less gradient or no adjacent hazard exists.

1133B.8.2 Overhanging obstructions. *Any obstruction that overhangs a pedestrian's way shall be a minimum of 80 inches (2032 mm) above the walking surface as measured from the bottom of the obstruction. Where a guy support is used parallel to a path of travel, including, but not limited to, sidewalks, a guy brace, sidewalk guy or similar device shall be used to prevent an overhanging obstruction as defined (see Figure 11B-28).*
Hazards such as drop-offs adjacent to walk ways or overhanging obstructions can be dangerous to persons with sight problems. This section addresses these situations.

1133B.8.3 Detectable warnings at transit boarding platforms. *Transit boarding platforms shall have a detectable warning texture extending the full length of the loading area. This detectable warning texture shall have the following features:*

Width 24 to 36 inches (610 mm to 914 mm) placed at the edge of the drop-off or safe area.

Durable, slip-resistant material having a surface texture composed of raised, truncated domes in a staggered pattern with a diameter of nominal 0.9 inch (22.9 mm) at the base tapering to 0.45 inch (11.4 mm) at the top, a height of nominal 0.2 inch (5.08 mm), and a center-to-center spacing of nominal 2.35 inches (59.7 mm) in compliance with Figure 11B-23A. "Nominal" as used here shall be in accordance with California State Referenced Standards Code Sections 12-11A and B-102. The detectable warning shall contrast visually with adjoining surfaces, either light on dark or dark on light. The material used to provide contrast shall be an integral part of the walking surface. Warning surfaces shall differ from adjoining walking surfaces in resiliency or sound on cane contact. This surface shall be reserved for warning.

Color yellow conforming to Federal Color No. 33538, as shown in Table IV of Standard No. 595B. Where the color value contrast between the yellow warning and the main walking surface is less than 70 percent, a 1 inch-wide (25 mm) black strip shall separate the yellow warning from the main walking surface. Contrast shall be determined by:

Contrast = [(B1-B2/B1)] × 100 percent where B1 = light reflectance value (LRV) of the lighter area and B2 = light reflectance value (LRV) of the darker area.

Only approved DSA/AC detectable warning products and directional surfaces shall be installed as provided in the California Code of Regulations (CCR), Title 24, Part 1, Articles 2, 3 and 4. Refer to CCR Title 24, Part 12, Chapter 12-11A and B, for building and facility access specifications for product approval for detectable warning products and directional surfaces.

NOTE: *Detectable warning products and directional surfaces installed after January 1, 2001, shall be evaluated by an independent entity, selected by the Department of General Services, Division of the State Architect-Access Compliance, for all occupancies, including transportation and other outdoor environments, except that when products and surfaces are for use in residential housing evaluation shall be in consultation with the Department of Housing and Community Development. See Government Code Section 4460.*

1133B.8.4 Detectable directional texture at boarding platforms. *At transit boarding platforms, the pedestrian access shall be identified with a detectable directional texture. This detectable directional texture shall comply with Figure 11B-23B and shall be 0.1 inch (2.54 mm) in height that tapers off to 0.04 inch (1.02 mm), with bars raised 0.2 inch (5.08 mm) from the surface. The raised bars shall be 1.3 inches (33.02 mm) wide and 3 inches (76 mm) from center-to-center of each bar. This surface shall differ from adjoining walking surfaces in resiliency or sound on cane contact. The color of the directional texture shall comply with Section 1133B.8.3. This surface will be placed directly behind the yellow detectable warning texture specified in Section 1133B.8.3, aligning with all doors of the transit vehicles, where passengers will embark. The width of the directional texture shall be equal to the width of the transit vehicle's door opening. The depth of the texture shall not be less than 36 inches (914 mm).*

Only approved DSA/AC detectable warning products and directional surfaces shall be installed as provided in the California Code of Regulations (CCR), Title 24, Part 1, Articles 2, 3 and 4. Refer to CCR Title 24, Part 12, Chapter 12-11A and B, for building and facility access specifications for product approval for detectable warning products and directional surfaces.

> ***NOTE:*** *Detectable warning products and directional surfaces installed after January 1, 2001, shall be evaluated by an independent entity, selected by the Department of General Services, Division of the State Architect-Access Compliance, for all occupancies, including transportation and other outdoor environments, except that when products and surfaces are for use in residential housing evaluation shall be in consultation with the Department of Housing and Community Development. See Government Code Section 4460.*

1133B.8.5 Detectable warnings at hazardous vehicular areas. *If a walk crosses or adjoins a vehicular way, and the walking surfaces are not separated by curbs, railings or other elements between the pedestrian areas and vehicular areas, the boundary between the areas shall be defined by a continuous detectable warning which is 36 inches (914 mm) wide, complying with Sections 1133B.8.3 through 1133B.8.5.*

Only approved DSA/AC detectable warning products and directional surfaces shall be installed as provided in the California Code of Regulations (CCR), Title 24, Part 1, Articles 2, 3 and 4. Refer to CCR Title 24, Part 12, Chapter 12-11A and B, for building and facility access specifications for product approval for detectable warning products and directional surfaces.

> ***NOTE:*** *Detectable warning products and directional surfaces installed after January 1, 2001, shall be evaluated by an independent entity, selected by the Department of General Services, Division of the State Architect-Access Compliance, for all occupancies, including transportation and other outdoor environments, except that when products and surfaces are for use in residential housing evaluation shall be in consultation with the Department of Housing and Community Development. See Government Code Section 4460.*

1133B.8.6 Protruding objects.

1133B.8.6.1 General. *Objects projecting from walls (for example, telephones) with their leading edges between 27 inches (686 mm) and 80 inches (2032 mm) above the finished floor shall protrude no more than 4 inches (102 mm) into walks, halls, corridors, passageways or aisles. Objects mounted with their leading edges at or below 27 inches (686 mm) above the finished floor may protrude any amount. Free-standing objects mounted on posts or pylons may overhang 12 inches (305 mm) maximum from 27 inches (686 mm) to 80 inches (2032 mm) above the ground or finished floor. Protruding objects shall not reduce the clear width of an accessible route or maneuvering space. See Figure 11B-7A.*

1133B.8.6.2 Head room. *Walks, halls, corridors, passageways, aisles or other circulation spaces shall have 80 inches (2032 mm) minimum clear head room. See Figure 11B-7A.*

1133B.8.6.3 Free-standing signs. *Wherever signs mounted on posts or pylons protrude from the posts or pylons and the bottom edge of the sign is at less than 80 inches (2032 mm) above the finished floor or ground level, the edges of such signs shall be rounded or eased and the corners shall have a minimum radius of 0.125 inches.*

Division IV – ACCESSIBILITY FOR EXISTING BUILDINGS

Note: *This division replaces Appendix Chapter 11, Division II, for use in California.*

SECTION 1134B – ACCESSIBILITY FOR EXISTING BUILDINGS

1134B.1 Scope. *The provisions of this division apply to renovation, structural repair, alteration and additions to existing buildings, including those identified as historic buildings. This division identifies minimum standards for removing architectural barriers, and providing and maintaining accessibility to existing buildings and their related facilities.*

1134B.2 General. *All existing buildings and facilities, when alterations, structural repairs or additions are made to such buildings or facilities, shall comply with all provisions of Division I, New Buildings, except as modified by this division. These requirements shall apply only to the area of specific alteration, structural repair or addition and shall include those areas listed below:*

1134B.2.1 A *primary entrance to the building or facility and the primary path of travel to the specific area of alteration, structural repair or addition, and sanitary facilities, drinking fountains, signs and public telephones serving the area.*

EXCEPTIONS:

1. *When the total construction cost of alterations, structural repairs or additions does not exceed a valuation threshold of $50,000, based on January 1981, "ENR US20 Cities" Average construction cost index of 3372.02 (Engineering News Record, McGraw Hill Publishing Company), and the enforcing agency finds that compliance with this code creates an unreasonable hardship, compliance shall be limited to the actual work of the project. The enforcing agency shall annually update the valuation threshold to a current amount based on the increase in the index since the last figure used. (For example, the January 2000 amount is $90.895.07.) For purposes of this exception, an unreasonable hardship exists where the cost of providing an accessible entrance, path of travel, sanitary facilities, public phones and drinking fountains, is disproportionate to the cost of the project; that is, where it exceeds 20 percent of the cost of the project without these features. Where the cost of alterations necessary to make these features fully accessible is disproportionate, access shall be provided to the extent that it can be without incurring disproportionate cost. In choosing which accessible elements to provide, priority should be given to those elements that will provide the greatest access in the following order:*

1.1 *An accessible entrance,*

1.2 *An accessible route to the altered area,*

1.3 *At least one accessible restroom for each sex,*

1.4 *Accessible telephones,*

1.5 *Accessible drinking fountains, and*

1.6 *When possible, additional accessible elements such as parking, storage and alarms.*

The obligation to provide access may not be evaded by performing a series of small alterations to the area served by a single path of travel if those alterations could have been performed as a single undertaking. If an area has been altered without providing an accessible path of travel to that area, and subsequent alterations of that area or a different area on the same path of travel are undertaken within three years of the original alteration, the total cost of alterations to the areas on that path of travel during the preceding three-year period shall be considered in determining whether the cost of making that path of travel accessible is disproportionate. Only alterations undertaken after January 26, 1992, shall be considered in determining if the cost of providing an accessible path of travel is disproportionate to the overall cost of the alterations.

2. *Certain types of privately funded, multistory buildings and facilities were formerly exempt from accessibility requirements above and below the first floor under this code, but as of the effective date of this regulation are no longer exempt due to more restrictive provisions in the federal Americans with Disabilities Act. In alteration projects involving buildings and facilities previously approved and built without elevators, areas above and below the ground floor are subject to the 20 percent disproportionality provisions described in Exception 1, above, even if the value of the project exceeds the valuation threshold in Exception 1. The types of buildings and facilities are:*

2.1 *Office buildings and passenger vehicle service stations of three stories or more and 3,000 or more square feet (279m2) per floor.*

2.2 *Offices of physicians and surgeons.*

2.3 *Shopping centers.*

2.4 *Other buildings and facilities three stories or more and more than 3,000 square feet (279 m2) per floor if a reasonable portion of services sought and used by the public is available on the accessible level.*

NOTE: *For the general privately funded multistory building exception applicable to new construction and alterations, see Section 1103B.1, *****Exception 2.1.*

3. *Alterations, structural repairs or additions consisting of one or more of the following shall be limited to the actual work of the project:*

3.1 *Altering one building entrance to meet accessibility requirements.*

3.2 *Altering one existing toilet facility to meet accessibility requirements.*

3.3 *Altering existing elevators to meet accessibility requirements.*

3.4 *Altering existing steps to meet accessibility requirements.*

3.5 *Altering existing handrails to meet accessibility requirements.*

3.6 *Alteration solely for the purpose of removing barriers undertaken pursuant to the requirements of Sections 36.402 and 36.404 through 36.406 of Title III of the Department of Justice regulations promulgated pursuant to the Americans with Disabilities Act (Public Law 101-336, 28 C.F.R. Section 36.402, 28 C.F.R. Section 36.404, 28 C.F.R. Section 36.405, and 28 C.F.R. 36.406) or the accessibility requirements of this code as those requirements or regulations now exist or are hereafter amended, including the following:*

3.6.1 *Installing ramps*

3.6.2 *Making curb cuts in sidewalks and entrance*

3.6.3 *Repositioning shelves*

3.6.4 *Rearranging tables, chairs, vending machines, display racks, and otherfurniture*

3.6.5 *Repositioning telephones*

3.6.6 *Adding raised markings on elevator control buttons*

3.6.7 *Installing flashing alarm lights*

3.6.8 *Widening doors*

3.6.9 *Installing offset hinges to widen doorways*

3.6.10 *Eliminating a turnstile or providing an alternative accessible path*

3.6.11 *Installing accessible door hardware*

3.6.12 *Installing grab bars in toilet stalls*

3.6.13 *Rearranging toilet partitions to increase maneuvering space*

3.6.14 *Insulating lavatory pipes under sinks to prevent burns*

3.6.15 *Installing a raised toilet seat*

3.6.16 *Installing a full-length bathroom mirror*

3.6.17 *Repositioning the paper towel dispenser in a bathroom*

3.6.18 *Creating designated accessible parking spaces*

3.6.19 *Installing an accessible paper cup dispenser at an existing inaccessible water fountain*

3.6.20 *Removing high-pile, low-density carpeting*

3.6.21 *Installing vehicle hand controls.*

***** In 1134B.2.1 in the Note to Exception 2.4 the cross-reference to 'Section 1103B.1, Exception 21.' Is incorrect. Cross-reference should read Exception 3. This will be submitted for correction in Rulemaking.

3.7 *Altering existing parking lots by resurfacing and/or restriping.*

4. *Projects which consist only of heating, ventilation, air conditioning, reroofing, electrical work not involving placement of switches and receptacles, cosmetic work that does not affect items regulated by this code, such as painting, equipment not considered to be a part of the architecture of the building or area, such as computer terminals, office equipment, etc., are not considered alteration projects for the purposes of accessibility for persons with disabilities and shall not be subject to this code. For the purposes of this section, the term "construction cost" does not include building permit fees or discretionary permit fees.*

NOTE: *The only purpose of this exception is to exclude projects from activating the provisions of this section. The exceptions are not intended to relieve projects from complying with other applicable provisions of this code (e.g., replacement of carpet does not activate the provisions of this section; however, it still must comply with Section 1124B.3).*

1134B.2.2 *Where it is technically infeasible in the area of an alteration to make existing restroom facilities code compliant and to install separate sanitary facilities for each sex, then the installation of at least one unisex toilet/bathroom per floor being altered, located in the same area as existing toilet facilities, will be permitted. Such a facility shall meet the requirements of Section 1115B.7.2.*

1134B.3 General Accessibility for Entrances, Exits and Paths of Travel.

1134B.3.1 Automatic doors. *When an automatic door operator is utilized to operate a pair of doors, at least one of the doors shall provide a clear, unobstructed opening width of 32 inches (813 mm) with the door positioned at an angle of 90 degrees from its closed position.*

EXCEPTIONS:

1. *In existing buildings the following shall apply:*

1.1 *Where the occupant load is less than 10, except Group I, Division 1 Occupancies, doorways may be 30 inches (762 mm) in clear width.*

1.2 *Where occupant load is greater than 10 and it is determined that compliance with Section 1120A.2.3 would create an unreasonable hardship, doorways may be 30 inches (762 mm) in clear width.*

2. *In existing buildings, the provisions of this section shall not apply when legal or physical constraints will not allow compliance with these building standards or equivalent facilitation without creating an unreasonable hardship. See Section 101.17.11,* Item 4.*

SECTION 1135B – HISTORIC PRESERVATION – SPECIAL STANDARDS OF ACCESSIBILITY FOR BUILDINGS WITH HISTORICAL SIGNIFICANCE

1135B.1 General. *Qualified historical buildings shall comply with the State Historical Building Code, Part 8, Title 24, of the California Code of Regulations as printed in Part 2, Chapter 34, Division II.*

***** In 1134B.3.1 (Automatic doors) in Exception 2 the cross-reference to 'Section 101.17.11, Item 4 ' is incorrect. Cross-reference should read Item 5. This will be submitted for correction in Rulemaking.

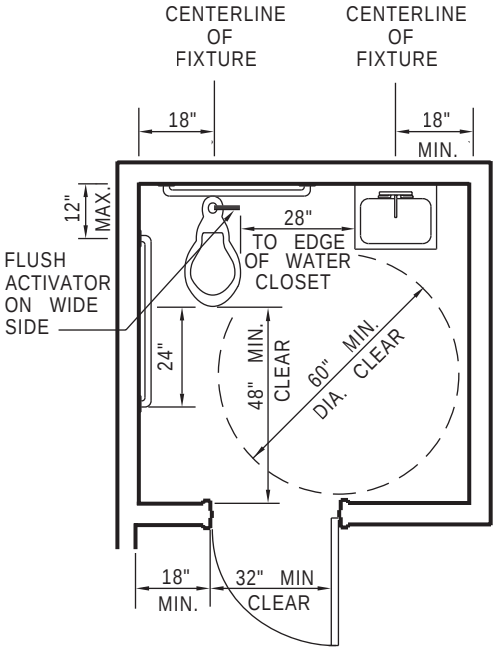

SINGLE OCCUPANCY TOILET

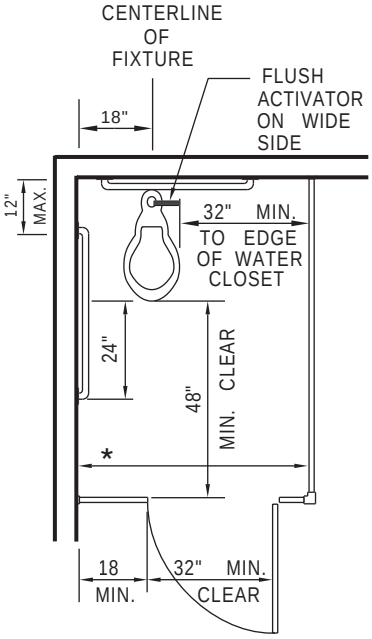

MULTIPLE TOILET STALL

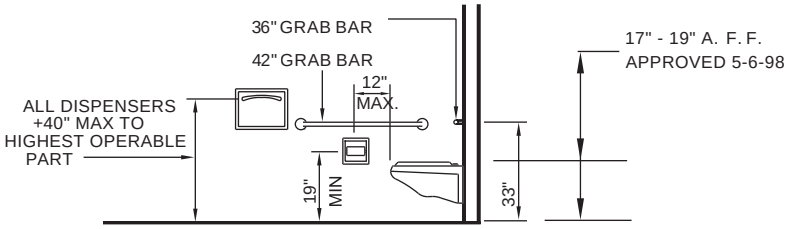

SIDE ELEVATION

THESE DIAGRAMS ILLUSTRATE THE SPECIFIC REQUIREMENTS OF THESE REGULATIONS AND ARE INTENDED ONLY AS AN AID FOR BUILDING DESIGN AND CONSTRUCTION

FIGURE 11B-1A

* The 60-inch minimum width for multiple toilet stall was left out of figure and will be submitted for correction in Rulemaking.

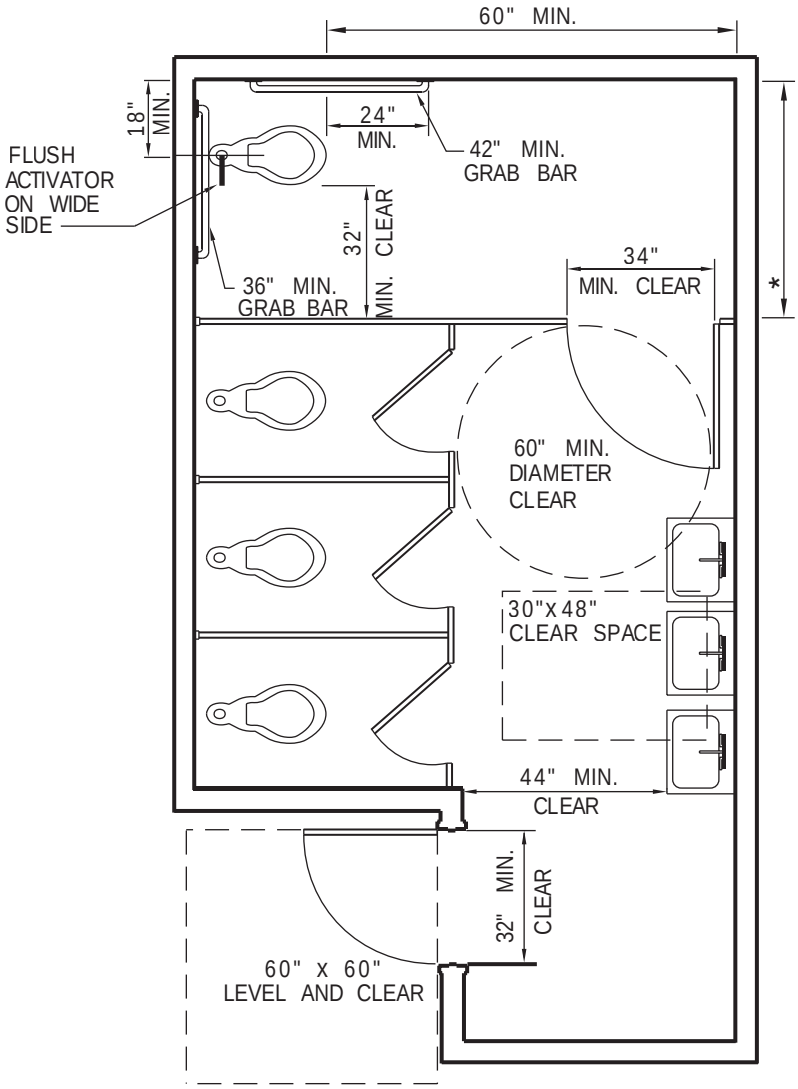

THIS DIAGRAM ILLUSTRATES THE SPECIFIC REQUIREMENTS OF THESE REGULATIONS AND IS INTENDED ONLY AS AN AID FOR BUILDING DESIGN AND CONSTRUCTION.

FIGURE 11B-1B—MULTIPLE ACCOMMODATION TOILET

* The 60-inch minimum width for multiple accommodation toilet stall was left out of figure and will be submitted for correction in Rulemaking.

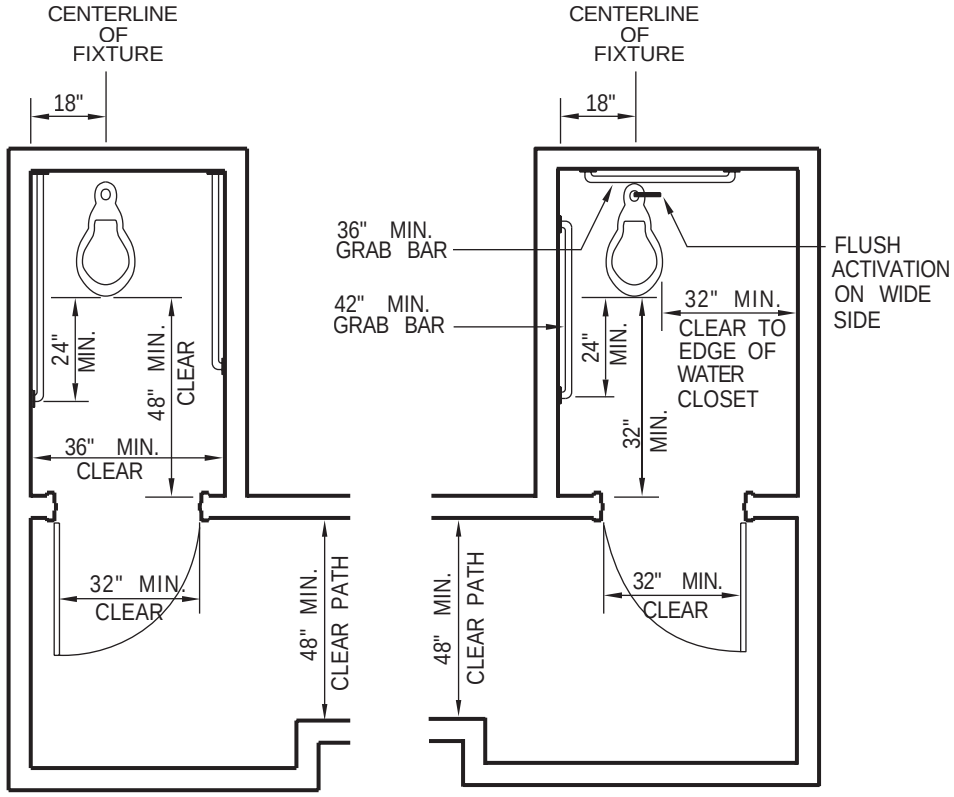

FRONT TRANSFER STYLE TOILET ROOM PLAN

SIDE TRANSFER STYLE TOILET ROOM PLAN

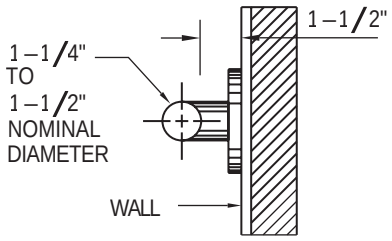

SECTION THROUGH TYPICAL GRAB BAR

THESE DIAGRAMS ILLUSTRATE THE SPECIFIC REQUIREMENTS OF THESE REGULATIONS AND ARE INTENDED ONLY AS AN AID FOR BUILDING DESIGN AND CONSTRUCTION

FIGURE 11B-1C—EQUIVALENT FACILITATION FOR EXISTING BUILDINGS ONLY

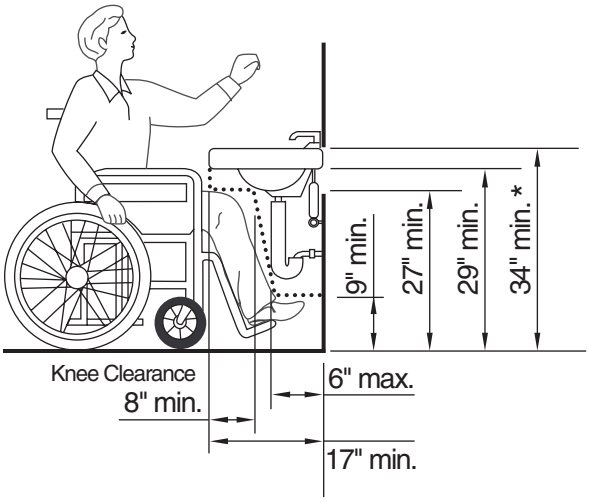

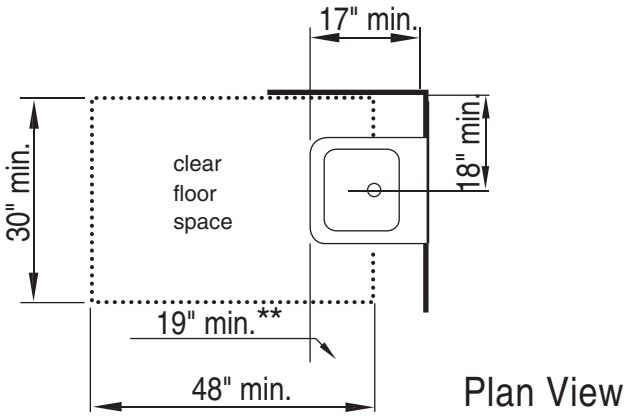

THIS DIAGRAM ILLUSTRATES THE SPECIFIC REQUIREMENTS OF THESE REGULATIONS AND IS INTENDED ONLY AS AN AID FOR BUILDING DESIGN AND CONSTRUCTION.

FIGURE 11B-1D—KNEE CLEARANCE

* To be consistent with Section 1115B.2.1.2.1 paragraph 2, the 34"-min. should read 34"-max. This will be corrected in Rulemaking.

** To be consistent with 1115B.2.1, the 19"-min. should read 19"-max. This will be corrected in Rulemaking.

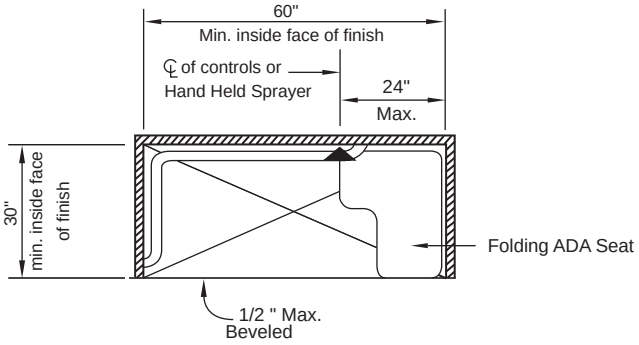

ROLL-IN SHOWER—A

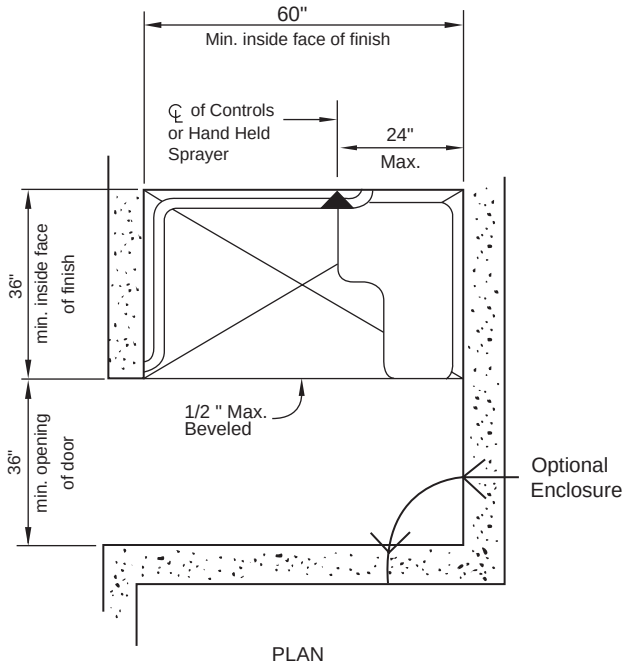

PLAN

ROLL-IN SHOWER—C
36" x 60" WITH ENCLOSURE

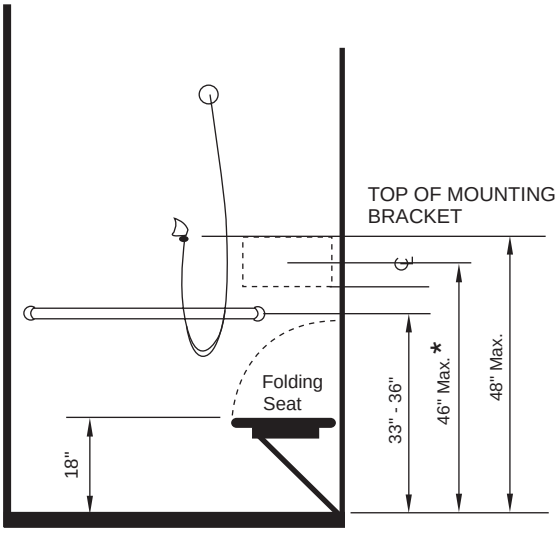

ELEVATION AT SHOWER
TYPICAL FOR A–C

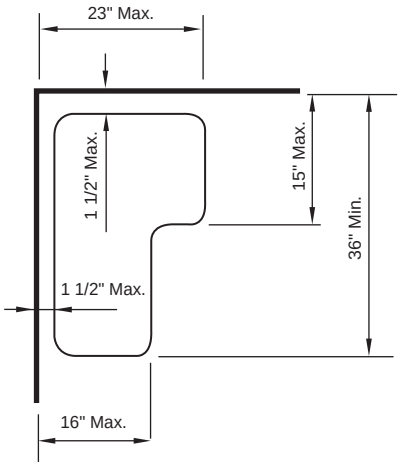

SHOWER SEAT

FIGURE 11B-2A—ROLL-IN SHOWER

* This was erroneously published as 46" max. It should read 40" max. The California Building Standards Commission will correct this in rulemaking.

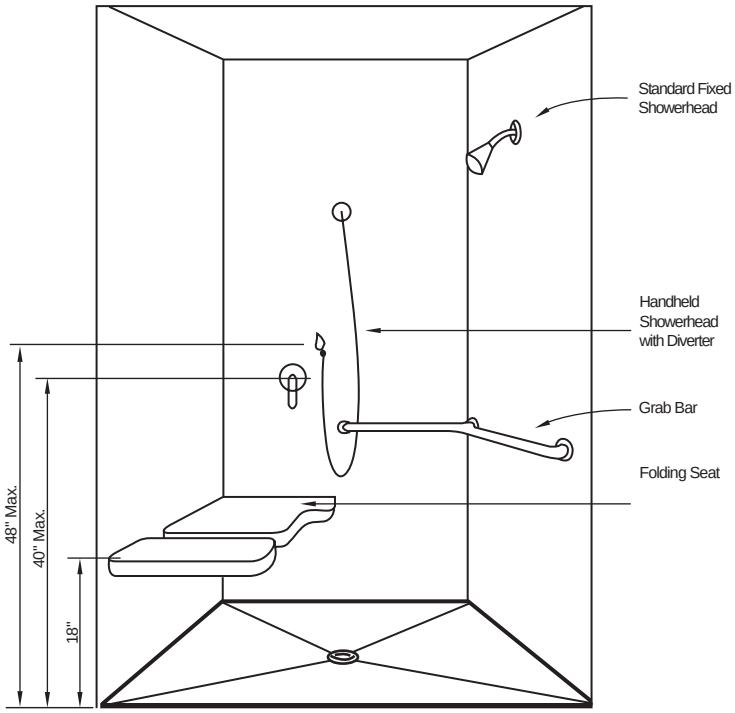

PERSPECTIVE OF ROLL-IN SHOWER—B
42" x 48" CALIFORNIA SIZE

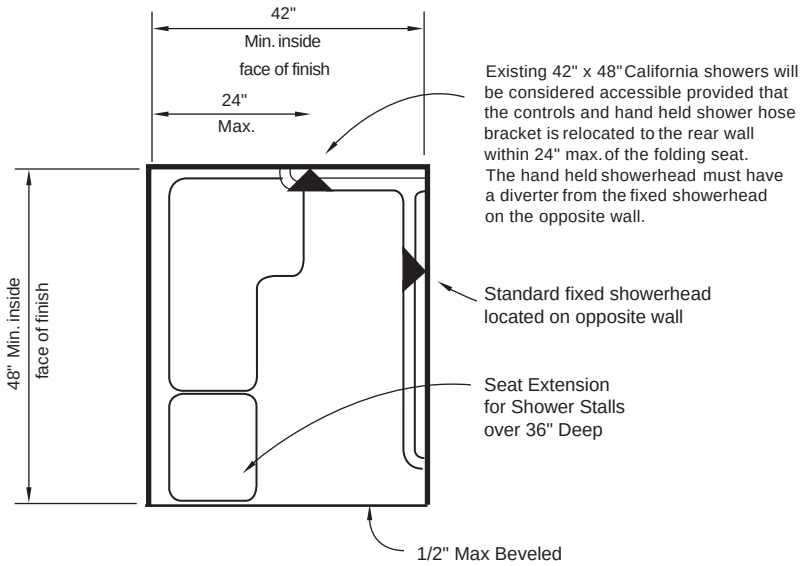

ROLL-IN SHOWER—B
42" x 48" CALIFORNIA SIZE

FIGURE 11B-2B—ROLL-IN SHOWER

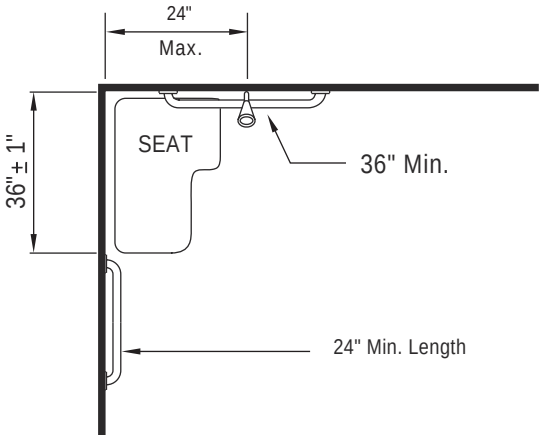

PLAN

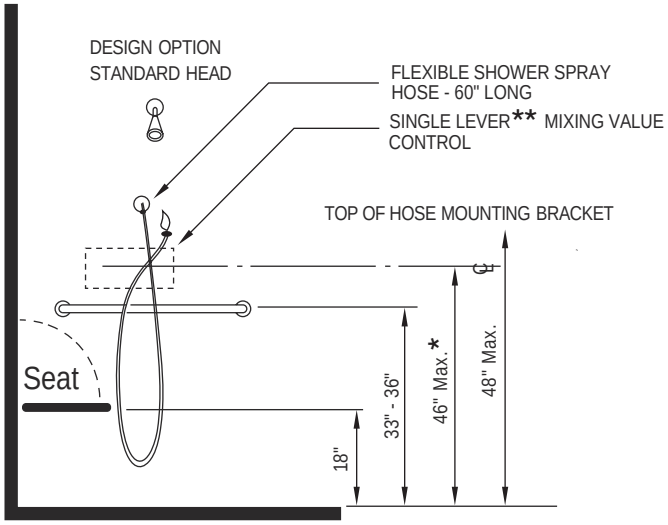

SECTION

THESE DIAGRAMS ILLUSTRATE THE SPECIFIC REQUIREMENTS OF THESE REGULATIONS AND ARE INTENDED ONLY AS AN AID FOR BUILDING DESIGN AND CONSTRUCTION

FIGURE 11B-2C—OPEN SHOWER

* This was erroneously published as 46" max. It should read 40" max. This will be corrected in rulemaking.

** This was erroneously published as LEVER. It should read LEVEL. This will be corrected in rulemaking.

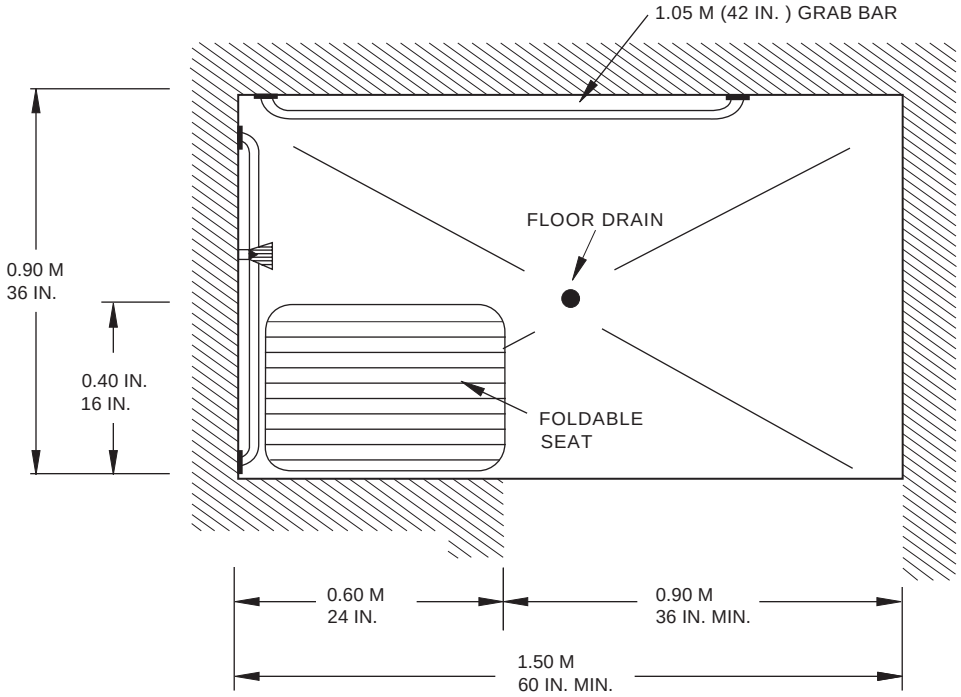

THIS DIAGRAM ILLUSTRATES THE SPECIFIC REQUIREMENTS OF THESE REGULATIONS AND IS INTENDED ONLY AS AN AID FOR BUILDING DESIGN AND CONSTRUCTION.

FIGURE 11B-2D—ALTERNATIVE ROLL-IN

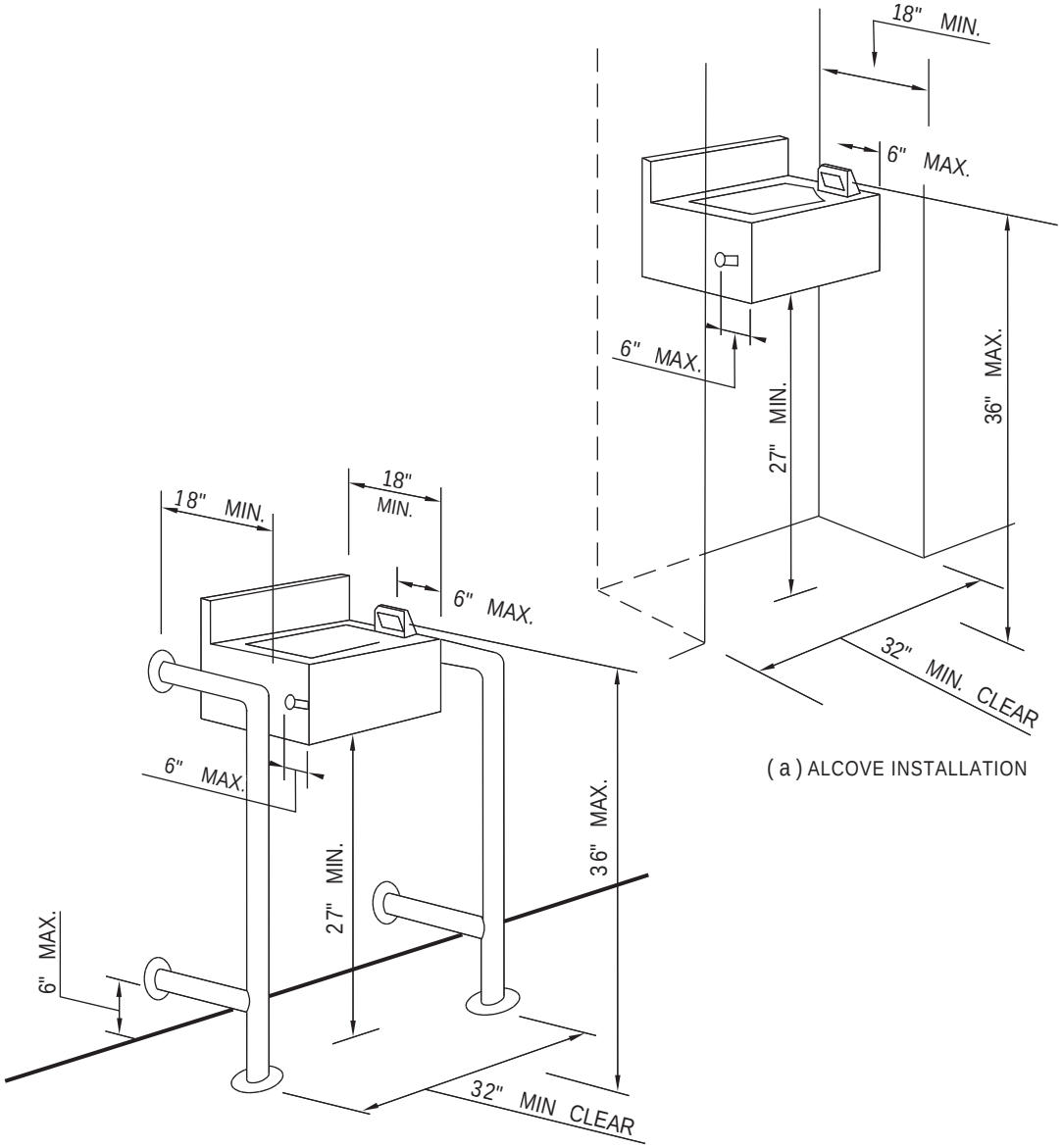

(a) ALCOVE INSTALLATION

(b) NONALCOVE WING WALL INSTALLATION

THESE DIAGRAMS ILLUSTRATE THE SPECIFIC REQUIREMENTS OF THESE REGULATIONS AND ARE INTENDED ONLY AS AN AID FOR BUILDING DESIGN AND CONSTRUCTION

FIGURE 11B-3—WATER FOUNTAINS

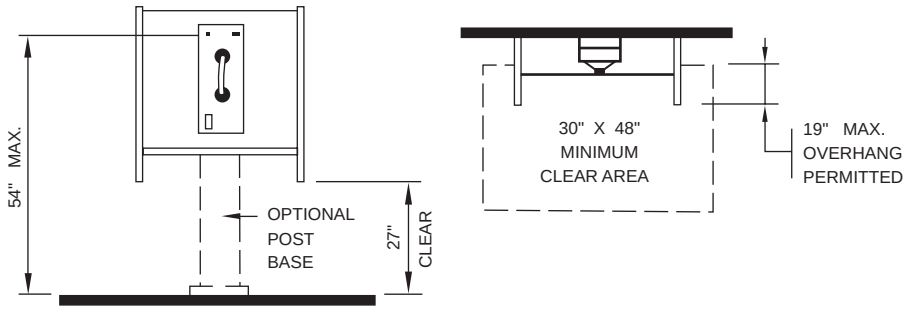

ELEVATION PLAN

(a) SIDE REACH ARRANGEMENT

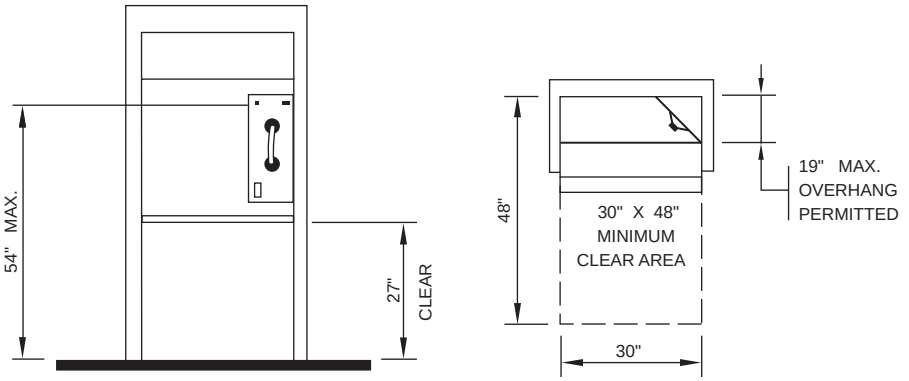

ELEVATION PLAN

(b) FULL HEIGHT ENCLOSURE

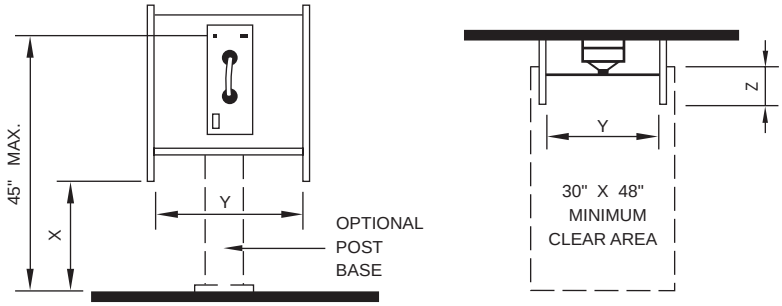

NOTE: IF Y IS LESS THAN 30 INCHES, THEN X SHALL BE GREATER THAN 27 INCHES.

NOTE: IF Z IS GREATER THAN 12 INCHES, THEN Y SHALL BE GREATER THAN 30 INCHES.

NOTE: IF Z IS GREATER THAN 12 THAN 30 INCHES.

ELEVATION PLAN

(c) FORWARD REACH ARRANGEMENT

THESE DIAGRAMS ILLUSTRATE THE SPECIFIC REQUIREMENTS OF THESE REGULATIONS AND ARE INTENDED ONLY AS AN AID FOR BUILDING DESIGN AND CONSTRUCTION

FIGURE 11B-4—MOUNTING HEIGHTS AND CLEARANCES FOR TELEPHONES

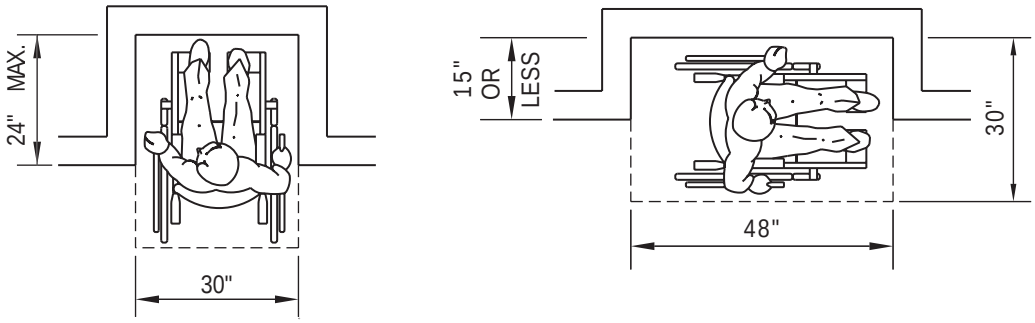

(a) CLEAR FLOOR SPACE IN ALCOVES

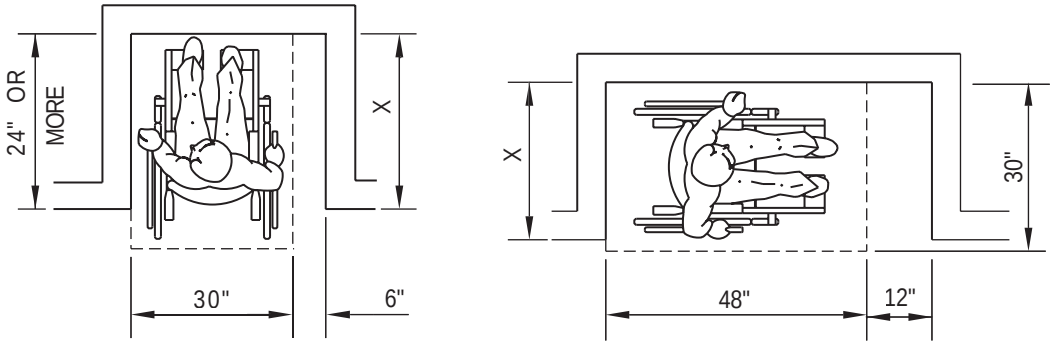

NOTE : IF X > 24 INCHES, THEN AN ADDITIONAL MANEUVERING CLEARANCE OF 6 INCHES SHALL BE PROVIDED AS SHOWN.

NOTE : IF X > 15 INCHES, THEN AN ADDITIONAL MANEUVERING CLEARANCE OF 12 INCHES SHALL BE PROVIDED AS SHOWN.

(b) ADDITIONAL MANEUVERING CLEARANCE FOR ALCOVES

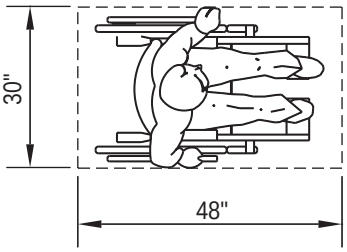

(c) CLEAR FLOOR SPACE

THESE DIAGRAMS ILLUSTRATE THE SPECIFIC REQUIREMENTS OF THESE REGULATIONS AND ARE INTENDED ONLY AS AN AID FOR BUILDING DESIGN AND CONSTRUCTION

FIGURE 11B-5A—MINIMUM CLEAR FLOOR SPACE FOR WHEELCHAIRS

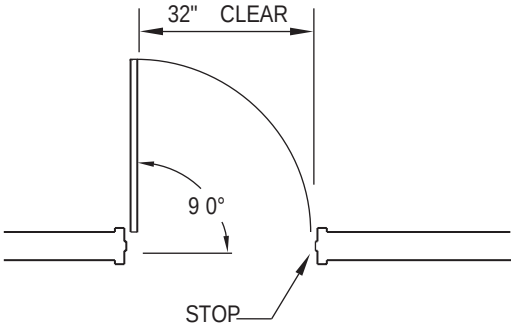

CLEAR OPENINGS MUST BE BETWEEN THE DOOR IN ITS 90 OPENING POSITION AND THE FACE OF THE STOP

(a) SINGLE DOOR

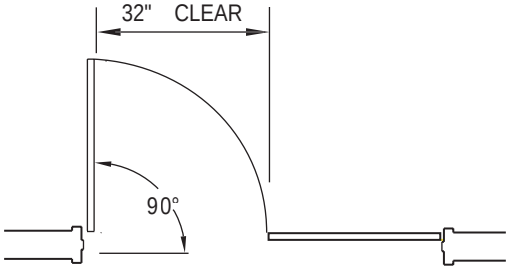

CLEAR OPENINGS FOR TWO LEAF DOORS MUST BE BETWEEN EITHER DOOR IN ITS 90° OPEN POSITION AND THE EDGE OF THE OTHER DOOR.

(b) DOUBLE DOOR

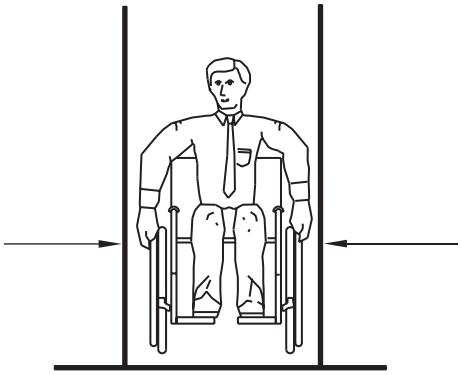

AN ADULT SIZE WHEELCHAIR AVERAGES 27 INCHES IN WIDTH. THE REQUIRED 32 INCH CLEAR OPENING ALLOWS 2–1/2 INCHES ON EACH SIDE FOR HANDS.

(c) PASSAGE CLEARANCE

THESE DIAGRAMS ILLUSTRATE THE SPECIFIC REQUIREMENTS OF THESE REGULATIONS AND ARE INTENDED ONLY AS AN AID FOR BUILDING DESIGN AND CONSTRUCTION

FIGURE 11B-5B—DOOR WIDTH

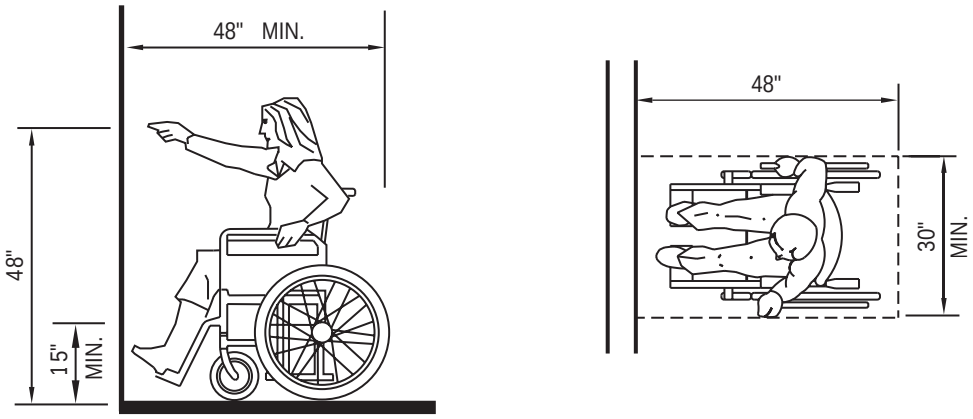

(a) HIGH FORWARD REACH LIMIT

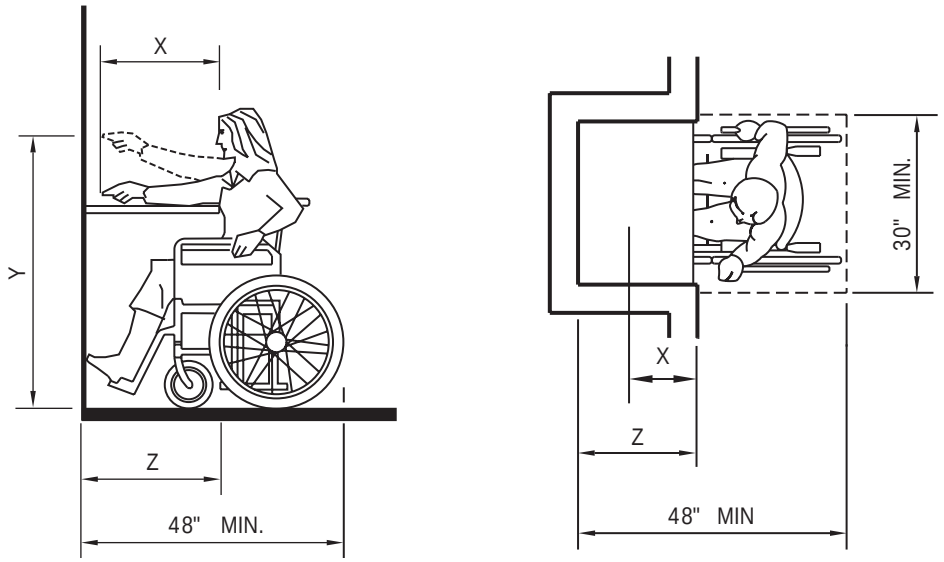

NOTE :
X SHALL BE LESS THAN OR EQUAL TO 25 INCHES Z SHALL BE GREATER THAN OR EQUAL TO X. WHEN X IS LESS THAN 20 INCHES, THEN Y SHALL BE 48 INCHES MAXIMUM. WHEN X IS 20 TO 25 INCHES, THEN Y SHALL BE 44 INCHES MAXIMUM.

(b) MAXIMUM FORWARD REACH OVER AN OBSTRUCTION

THESE DIAGRAMS ILLUSTRATE THE SPECIFIC REQUIREMENTS OF THESE REGULATIONS AND ARE INTENDED ONLY AS AN AID FOR BUILDING DESIGN AND CONSTRUCTION

FIGURE 11B-5C—FORWARD REACH

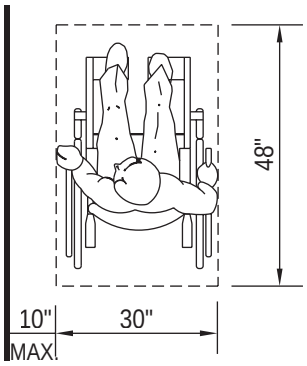

(a) CLEAR FLOOR SPACE PARALLEL APPROACH

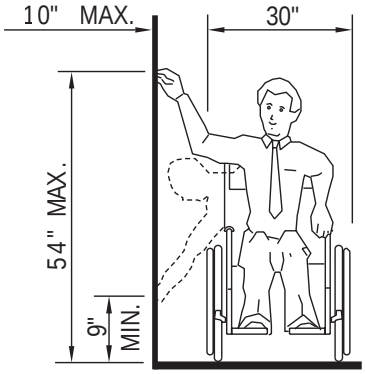

(b) HIGH AND LOW SIDE REACH LIMITS

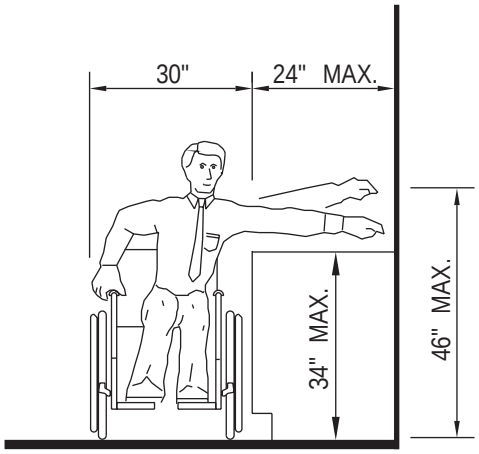

(c) MAXIMUM SIDE REACH OVER OBSTRUCTION

THESE DIAGRAMS ILLUSTRATE THE SPECIFIC REQUIREMENTS OF THESE REGULATIONS AND ARE INTENDED ONLY AS AN AID FOR BUILDING DESIGN AND CONSTRUCTION

FIGURE 11B-5D—SIDE REACH

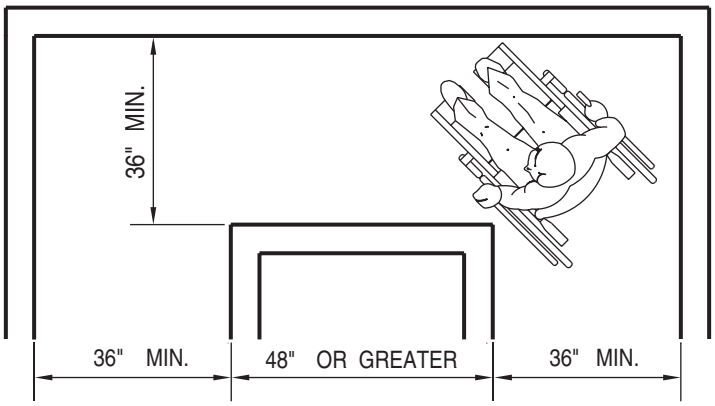

(a) 90° TURN

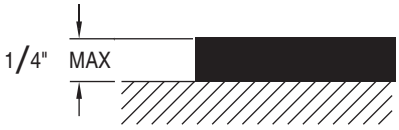

(c) CHANGE IN LEVEL

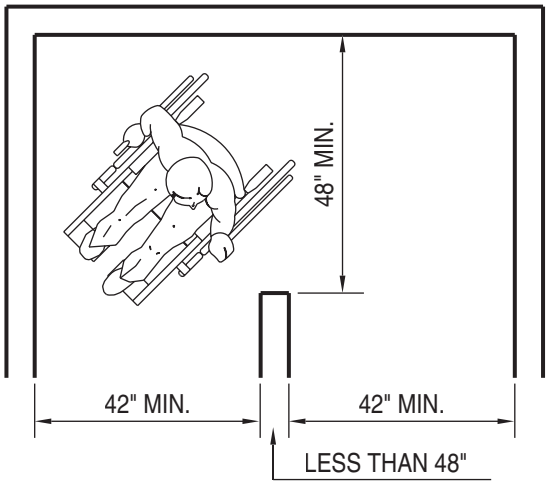

(d) TURNS AROUND AN OBSTRUCTION

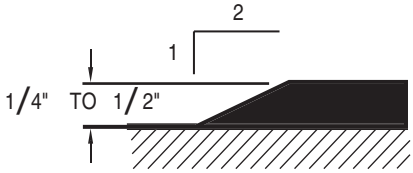

(d) CHANGE IN LEVEL

THESE DIAGRAMS ILLUSTRATE THE SPECIFIC REQUIREMENTS OF THESE REGULATIONS AND ARE INTENDED ONLY AS AN AID FOR BUILDING DESIGN AND CONSTRUCTION

FIGURE 11B-5E—WIDTH OF ACCESSIBLE ROUTE

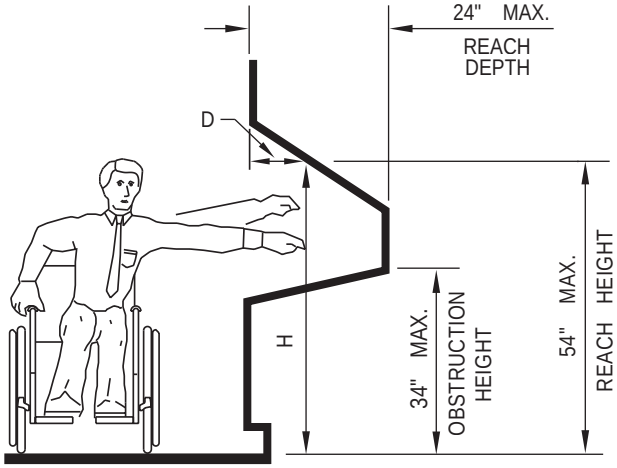

(d) ATM REACH RANGE LIMITS

CORRESPONDING REACH HEIGHTS FOR GIVEN DEPTHS :

WHEN D = 10" OR LESS, H = 54" MAX.
WHEN D = 10" , H = 53.5" MAX.
WHEN D = 12" , H = 53.0" MAX.
WHEN D = 13" , H = 52.5" MAX.
WHEN D = 14" , H = 51.5" MAX.
WHEN D = 15" , H = 51.0" MAX.
WHEN D = 16" , H = 50.5" MAX.
WHEN D = 17" , H = 50.0" MAX.
WHEN D = 18" , H = 49.5" MAX.
WHEN D = 19" , H = 49.0" MAX.
WHEN D = 20" , H = 48.5" MAX.
WHEN D = 21" , H = 47.5" MAX.
WHEN D = 22" , H = 47.0" MAX.
WHEN D = 23" , H = 46.5" MAX.
WHEN D = 24" , H = 46.0" MAX.

THIS DIAGRAM ILLUSTRATES THE SPECIFIC REQUIREMENTS OF THESE REGULATIONS AND IS INTENDED ONLY AS AN AID FOR BUILDING DESIGN AND CONSTRUCTION

FIGURE 11B-5F—ATM REACH RANGE LIMITS

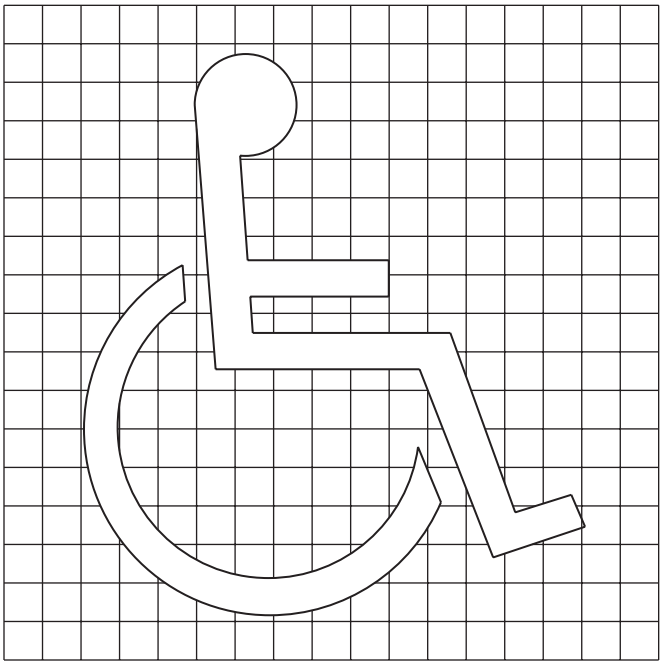

(a) SYMBOL PROPORTIONS

(b) DISPLAY CONDITIONS

THESE DIAGRAMS ILLUSTRATE THE SPECIFIC REQUIREMENTS OF THESE REGULATIONS AND ARE INTENDED ONLY AS AN AID FOR BUILDING DESIGN AND CONSTRUCTION.

FIGURE 11B-6—INTERNATIONAL ACCESSIBILITY SYMBOL

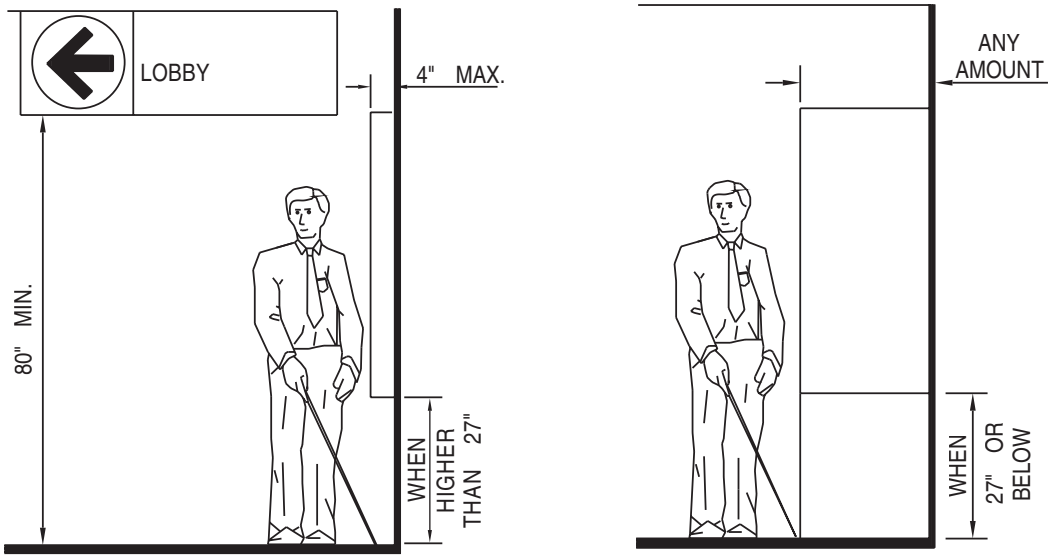

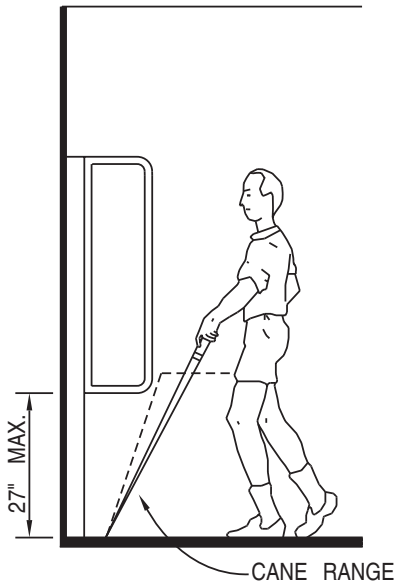

WALKING PERPENDICULAR TO WALL

THESE DIAGRAMS ILLUSTRATE THE SPECIFIC REQUIREMENTS OF THESE REGULATIONS AND ARE INTENDED ONLY AS AN AID FOR BUILDING DESIGN AND CONSTRUCTION.

FIGURE 11B-7A—PROTRUDING OBJECTS

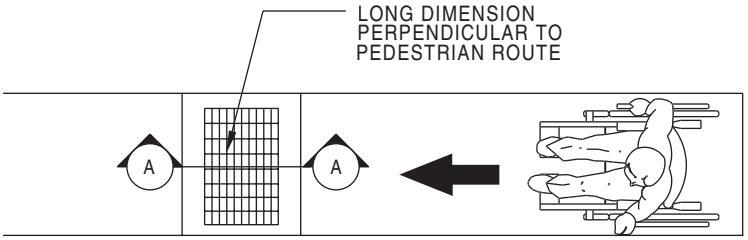

PLAN

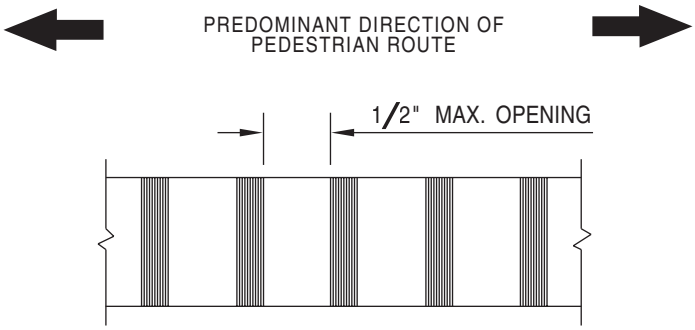

SECTION A–A THROUGH GRATE

(a) GRATE ORIENTATION TO PATH OF TRAVEL

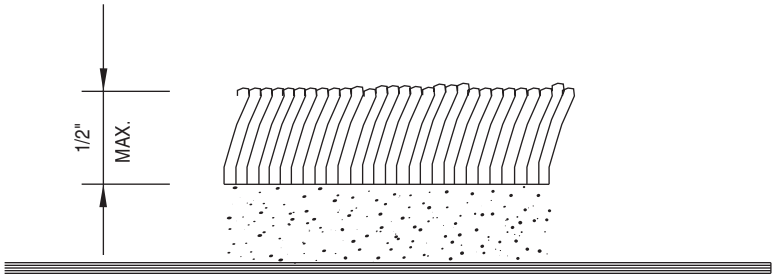

(b) CARPET PILE THICKNESS

THESE DIAGRAMS ILLUSTRATE THE SPECIFIC REQUIREMENTS OF THESE REGULATIONS AND ARE INTENDED ONLY AS AN AID FOR BUILDING DESIGN AND CONSTRUCTION.

FIGURE 11B-7B

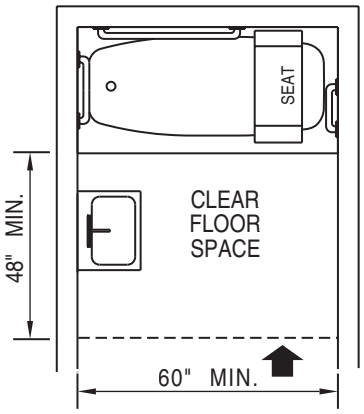

(a) WITH SEAT IN TUB

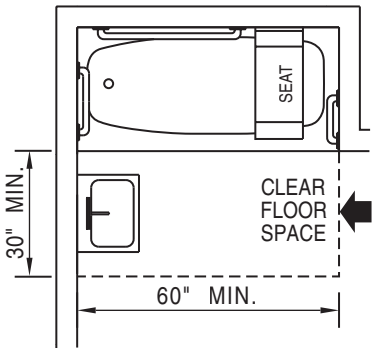

(b) WITH SEAT IN TUB

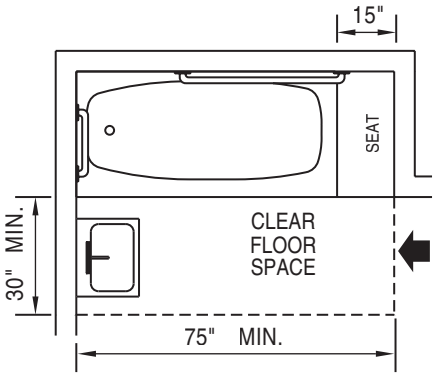

(c) WITH SEAT AT HEAD OF TUB

THESE DIAGRAMS ILLUSTRATE THE SPECIFIC REQUIREMENTS OF THESE REGULATIONS AND ARE INTENDED ONLY AS AN AID FOR BUILDING DESIGN AND CONSTRUCTION.

FIGURE 11B-8—CLEAR FLOOR SPACE AT BATHTUBS

(a) WATER CLOSET IN ADAPTABLE BATHROOMS

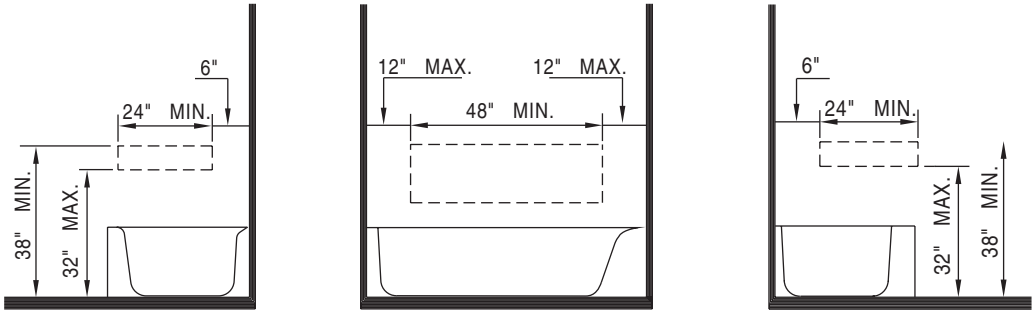

NOTE : THE AREA OUTLINED IN DASHED LINES REPRESENT LOCATIONS FOR FUTURE INSTALLATION OF GRAB BARS FOR TYP. FIXTURE CONFIGURATIONS

(b) LOCATION OR GRAB BAR REINFORCEMENTS FOR ADAPTABLE BATHTUBS

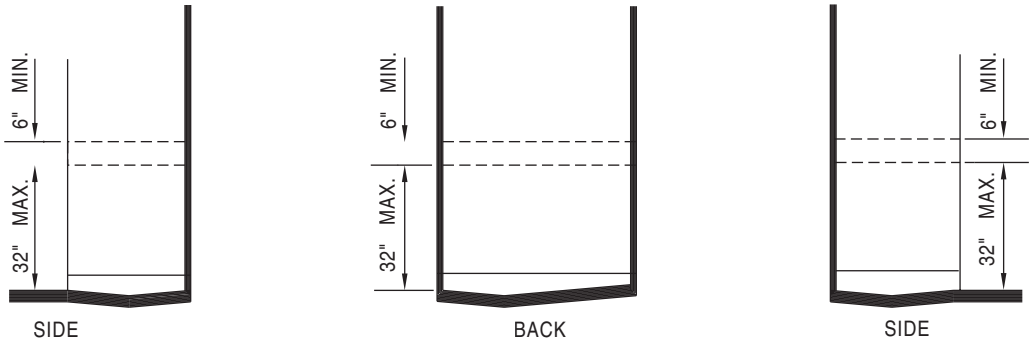

NOTE : THE AREA OUTLINED IN DASHED LINES REPRESENT LOCATION OF FUTURE INSTALLATION OF GRAB BARS

(C) LOCATION OR GRAB BAR REINFORCEMENTS FOR ADAPTABLE SHOWERS

THESE DIAGRAMS ILLUSTRATE THE SPECIFIC REQUIREMENTS OF THESE REGULATIONS AND ARE INTENDED ONLY AS AN AID FOR BUILDING DESIGN AND CONSTRUCTION.

FIGURE 11B-9A

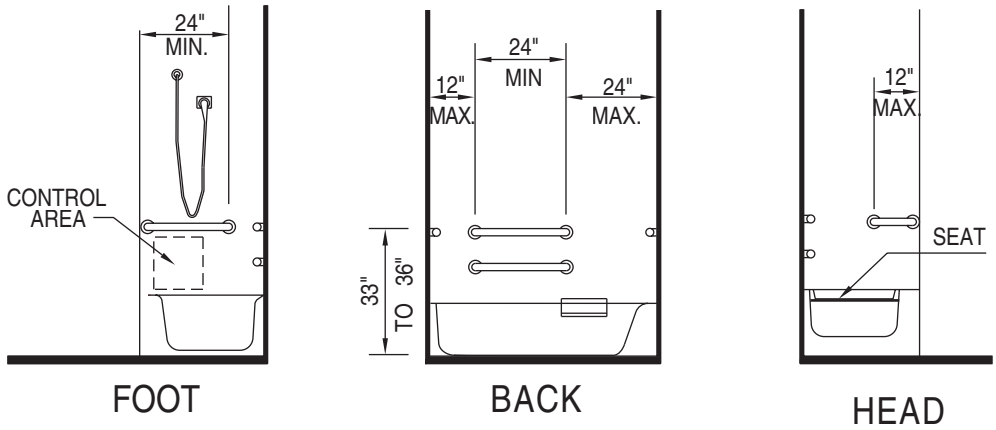

(a) WITH SEAT IN TUB

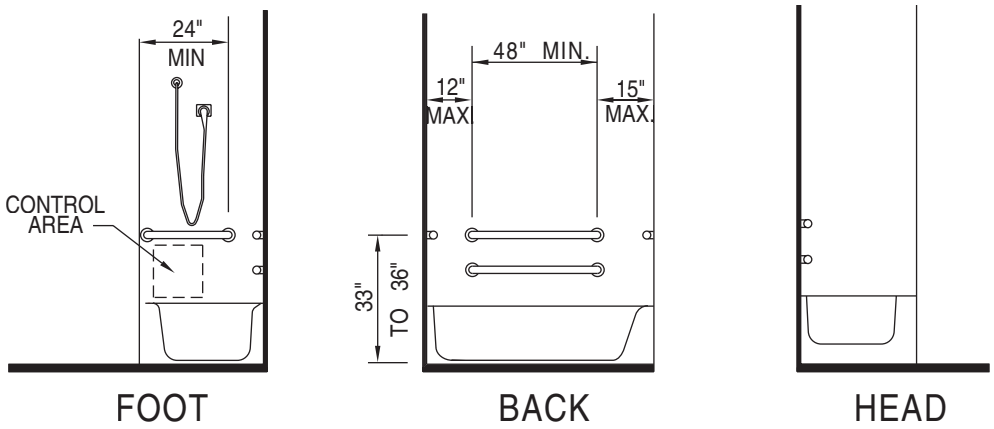

(b) WITH SEAT AT HEAD OF TUB

THESE DIAGRAMS ILLUSTRATE THE SPECIFIC REQUIREMENTS OF THESE REGULATIONS AND ARE INTENDED ONLY AS AN AID FOR BUILDING DESIGN AND CONSTRUCTION.

FIGURE 11B-9B—GRAB BARS AT BATHTUBS

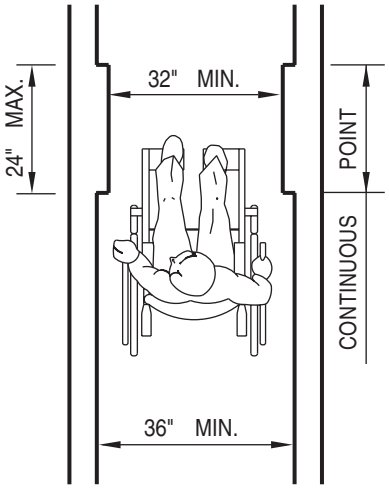

FIGURE 11B-10—MINIMUM CLEAR WIDTH FOR SINGLE WHEELCHAIR

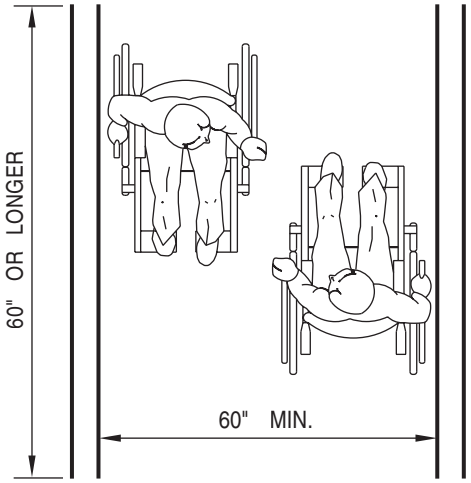

FIGURE 11B-11—MINIMUM CLEAR WIDTH FOR TWO WHEELCHAIRS

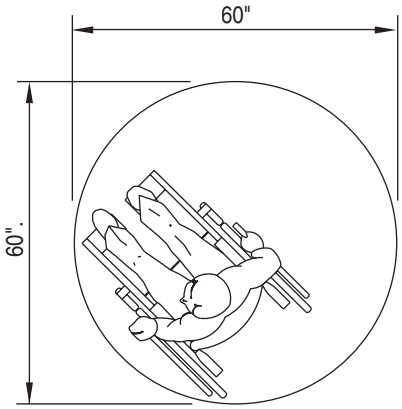

(a) 60 INCHES DIAMETER SPACE

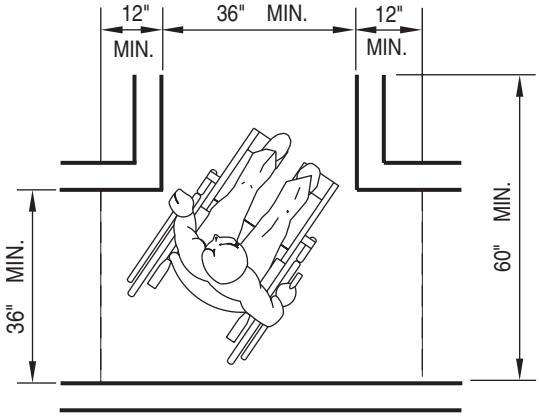

(b) T–SHAPED SPACE FOR 180° TURNS

THESE DIAGRAMS ILLUSTRATE THE SPECIFIC REQUIREMENTS OF THESE REGULATIONS AND ARE INTENDED ONLY AS AN AID FOR BUILDING DESIGN AND CONSTRUCTION.

FIGURE 11B-12—WHEELCHAIR TURNING SPACE

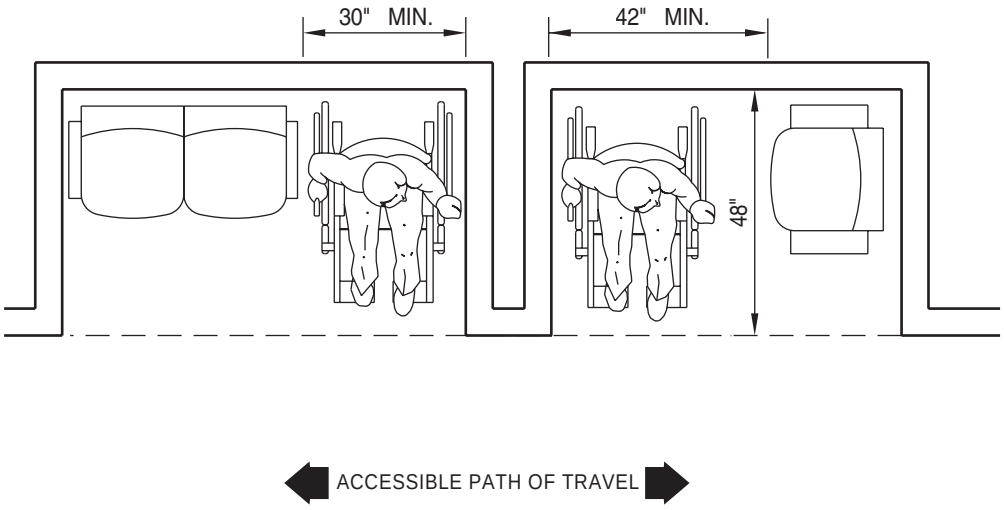

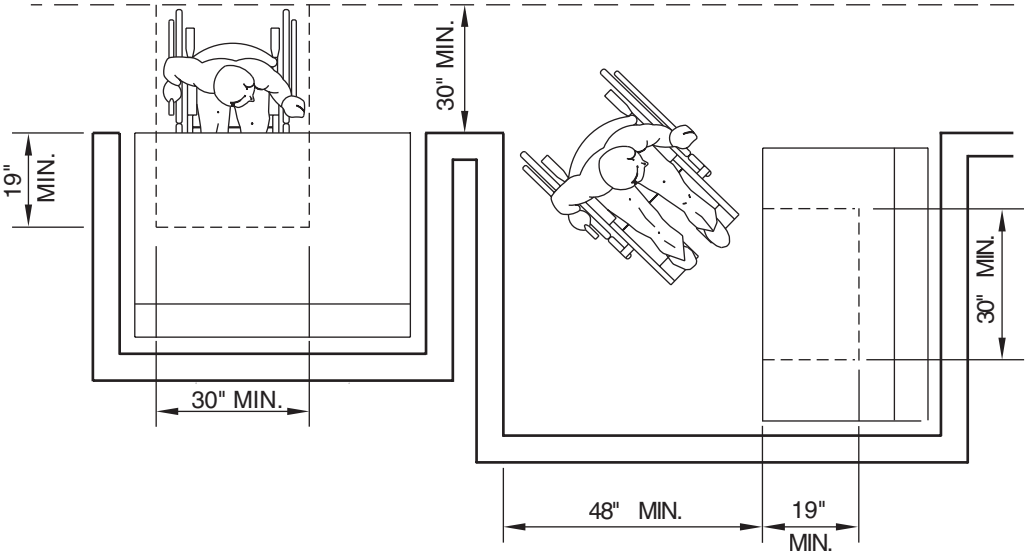

THESE DIAGRAMS ILLUSTRATE THE SPECIFIC REQUIREMENTS OF THESE REGULATIONS AND ARE INTENDED ONLY AS AN AID FOR BUILDING DESIGN AND CONSTRUCTION.

FIGURE 11B-13—MINIMUM CLEARANCES FOR SEATING AND TABLE

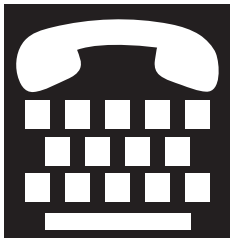

FIGURE 11B-14A— INTERNATIONAL *SYMBOL OF ACCESS FOR HEARING IMPAIRED

FIGURE 11B-14B—INTERNATIONAL SYMBOL OF ACCESS FOR HEARING IMPAIRED**

FIGURE 11B-14C— INTERNATIONAL SYMBOL OF ACCESS FOR HEARING ***IMPAIRED

THESE DIAGRAMS ILLUSTRATE THE SPECIFIC REQUIREMENTS OF THESE REGULATIONS AND ARE INTENDED ONLY AS AN AID FOR BUILDING DESIGN AND CONSTRUCTION.

* This title should read "INTERNATIONAL TTY SYMBOL."

** Title should read "VOLUME CONTROL TELEPHONES."

*** Title should read "INTERNATIONAL SYMBOL OF ACCESS FOR HEARING LOSS."

These titles will be corrected in Rulemaking.

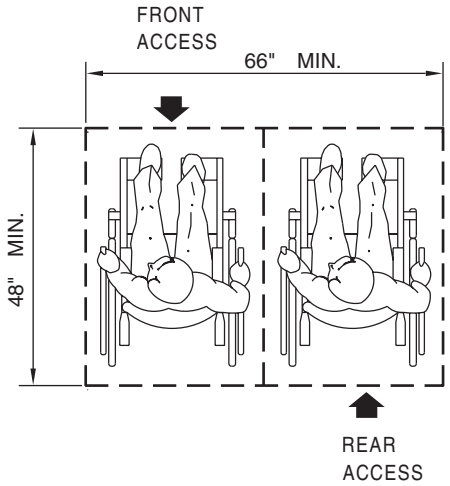

(a) FORWARD OR REAR ACCESS

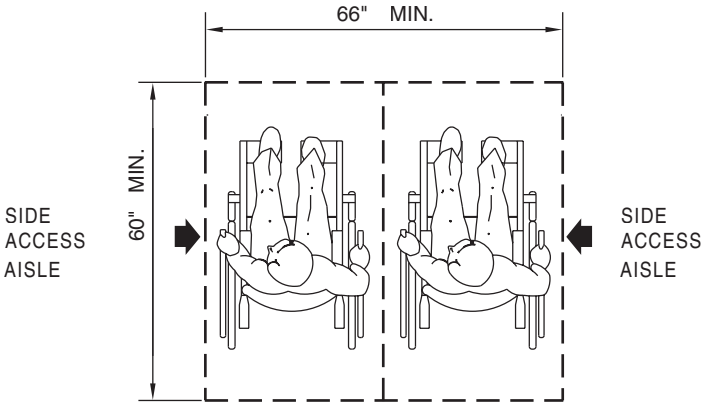

(b) SIDE ACCESS

NOTE:
EACH INDIVIDUAL SEATING POSITION HAS AN EGRESS ROUTE WHICH DOES NOT CROSS THROUGH OTHER SEATING POSITIONS.

THESE DIAGRAMS ILLUSTRATE THE SPECIFIC REQUIREMENTS OF THESE REGULATIONS AND ARE INTENDED ONLY AS AN AID FOR BUILDING DESIGN AND CONSTRUCTION.

FIGURE 11B-15—SPACE REQUIREMENTS FOR WHEELCHAIR SEATING

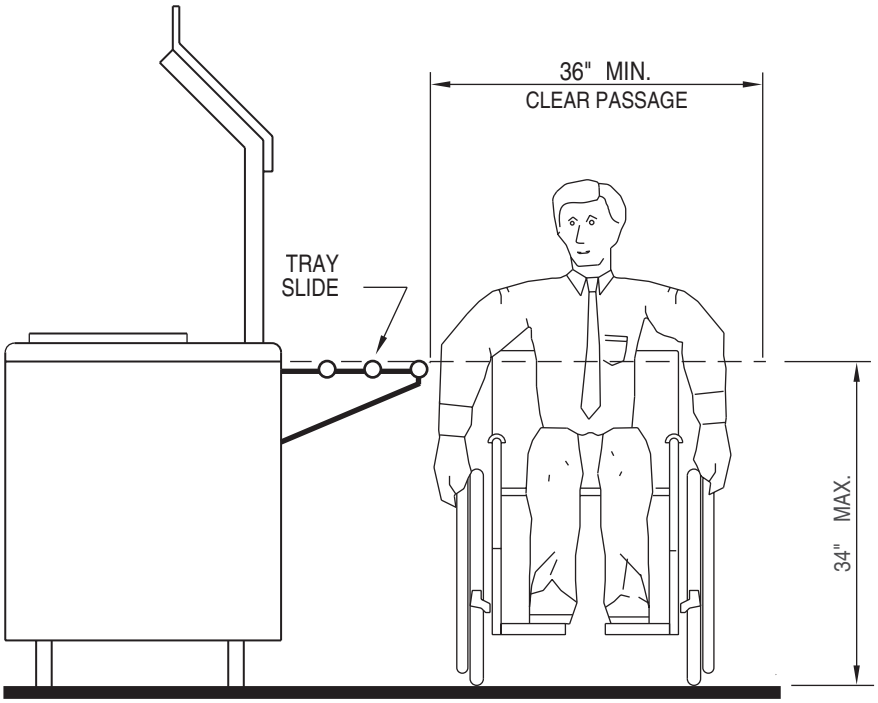

FIGURE 11B-16—FOOD SERVICE LINES

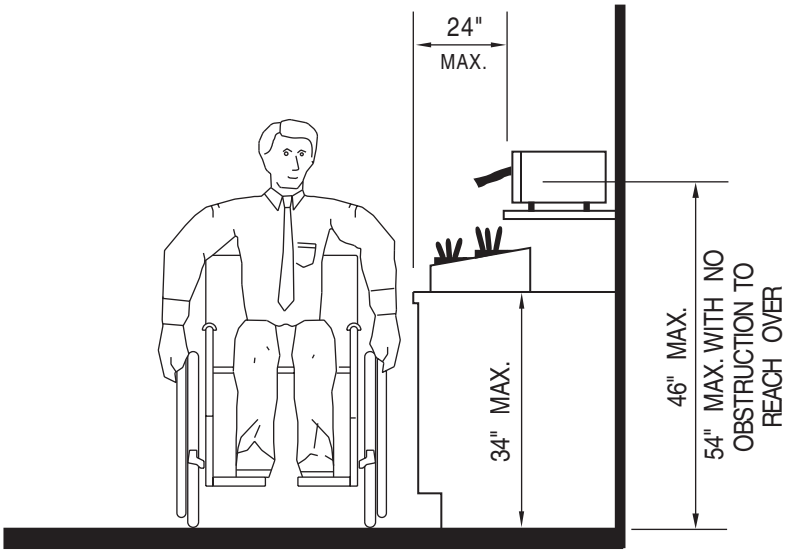

THESE DIAGRAMS ILLUSTRATE THE SPECIFIC REQUIREMENTS OF THESE REGULATIONS AND ARE INTENDED ONLY AS AN AID FOR BUILDING DESIGN AND CONSTRUCTION.

FIGURE 11B-17—TABLEWARE AREAS

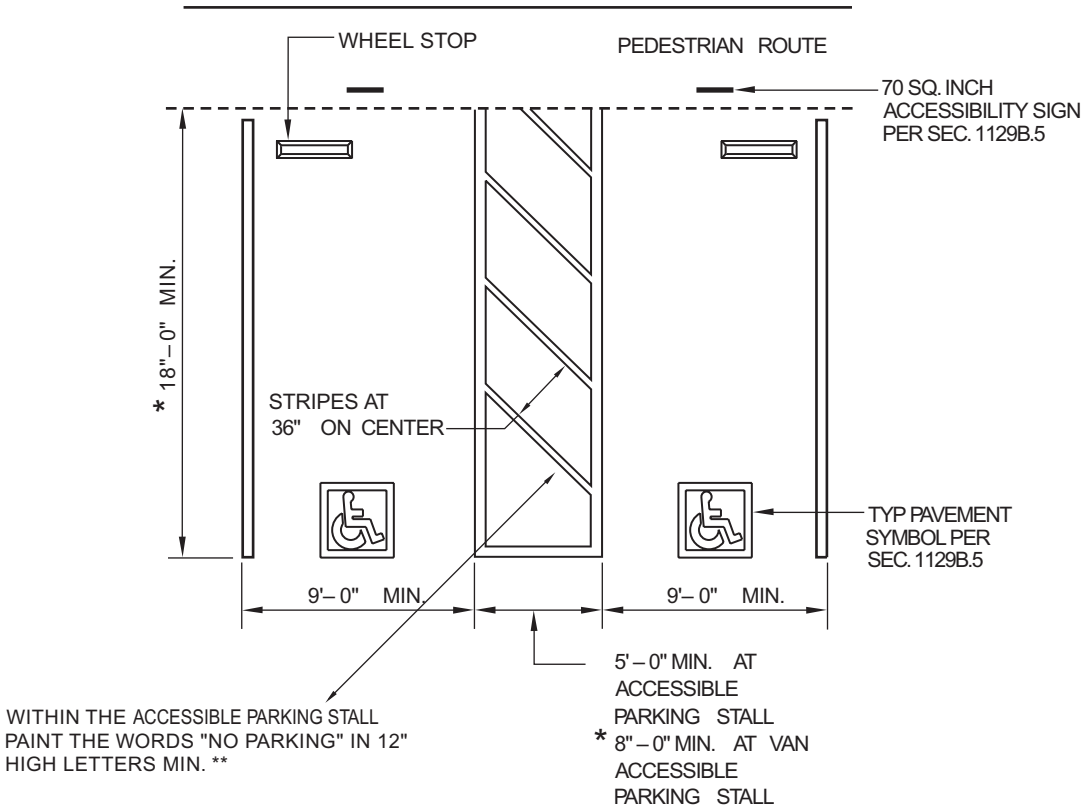

THIS DIAGRAM ILLUSTRATES THE SPECIFIC REQUIREMENTS OF THESE REGULATIONS AND IS INTENDED ONLY AS AN AID FOR BUILDING DESIGN AND CONSTRUCTION.

FIGURE 11B-18A—DOUBLE PARKING STALLS

* 18" and 8" are incorrect. Figure should read 18-feet and 8-feet. This will be submitted for correction in Rulemaking.

** Figure should be amended to more clearly identify that at the bottom of the loading and unloading access aisle the words "NO PARKING" shall be painted on the ground within each eight-foot loading and unloading access aisle. This will be submitted for correction in Rulemaking.

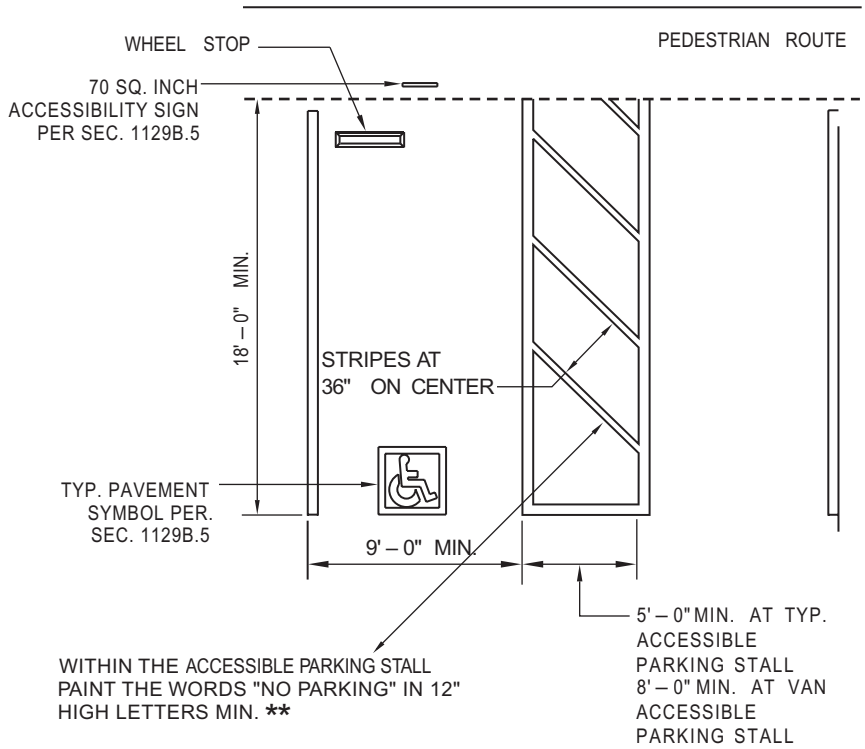

FIGURE 11B-18B—SINGLE PARKING STALLS

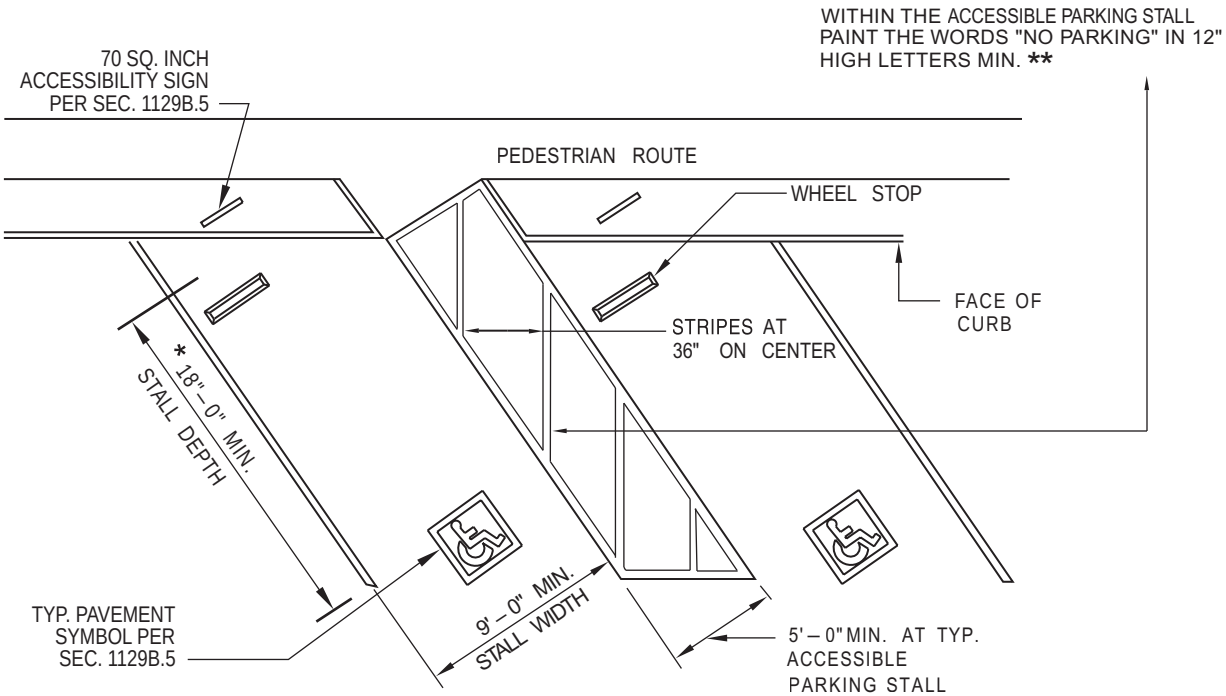

THESE DIAGRAMS ILLUSTRATE THE SPECIFIC REQUIREMENTS OF THESE REGULATIONS AND ARE INTENDED ONLY AS AN AID FOR BUILDING DESIGN AND CONSTRUCTION.

FIGURE 11B-18C—DIAGONAL PARKING STALLS

* 18" at figure 11B-18C is incorrect. Figure should read 18-feet. This will be submitted for correction in Rulemaking.

** Figure should be amended to more clearly identify that at the bottom of the loading and unloading access aisle the words "NO PARKING" shall be painted on the ground within each eight-foot loading and unloading access aisle. This will be submitted for correction in Rulemaking.

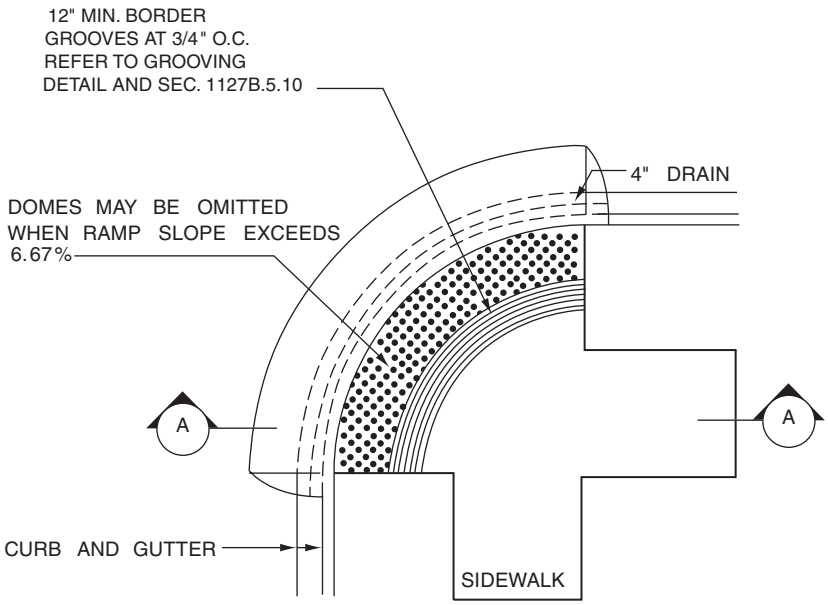

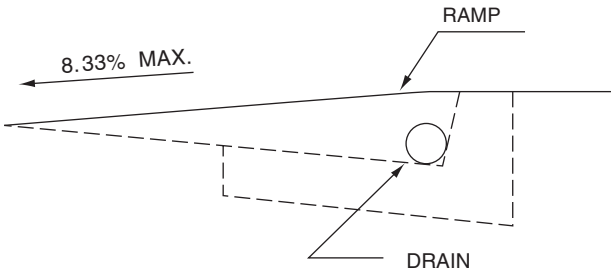

SECTION A–A

THESE DIAGRAMS ILLUSTRATE THE SPECIFIC REQUIREMENTS OF THESE REGULATIONS AND ARE INTENDED ONLY AS AN AID FOR BUILDING DESIGN AND CONSTRUCTION.

FIGURE 11B-19A—CURB DETAILS

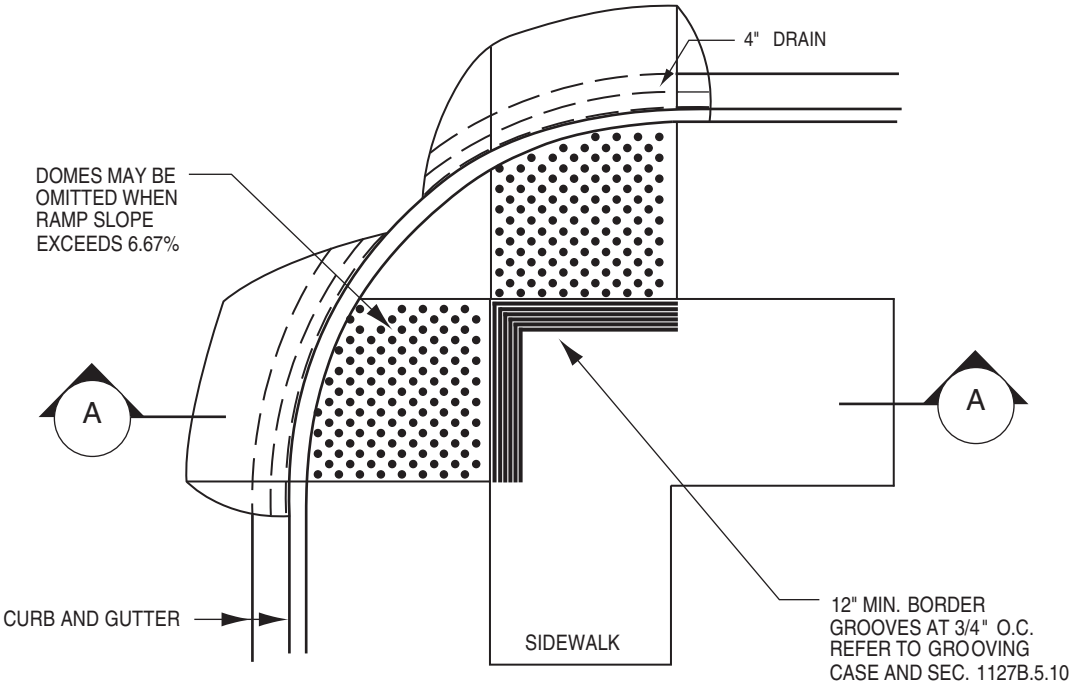

SEE FIGURE 11B-19A

THIS DIAGRAM ILLUSTRATES THE SPECIFIC REQUIREMENTS OF THESE REGULATIONS AND IS INTENDED ONLY AS AN AID FOR BUILDING DESIGN AND CONSTRUCTION.

FIGURE 11B-19B—CURB DETAIL

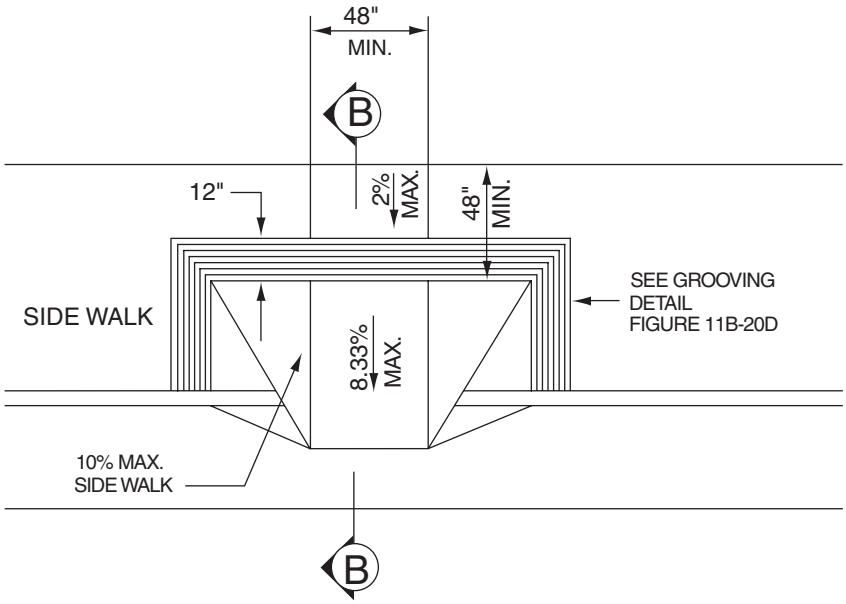

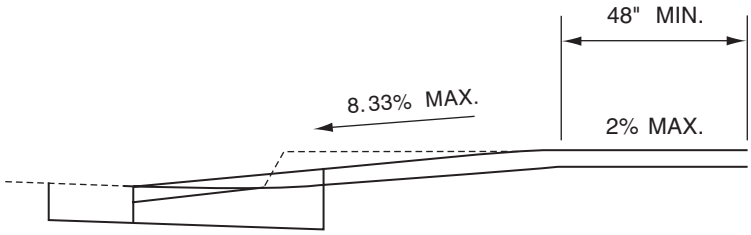

SECTION B–B

THESE DIAGRAMS ILLUSTRATE THE SPECIFIC REQUIREMENTS OF THESE REGULATIONS AND ARE INTENDED ONLY AS AN AID FOR BUILDING DESIGN AND CONSTRUCTION.

FIGURE 11B-19C—CURB DETAIL

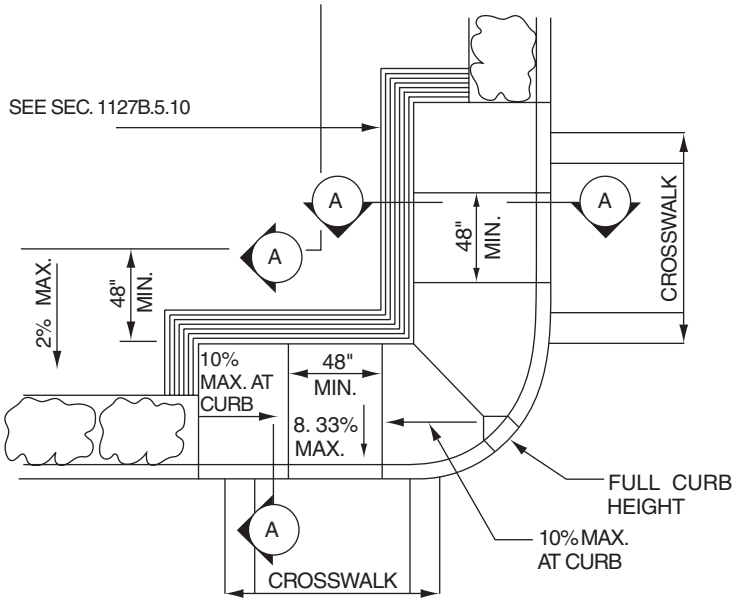

CASE A

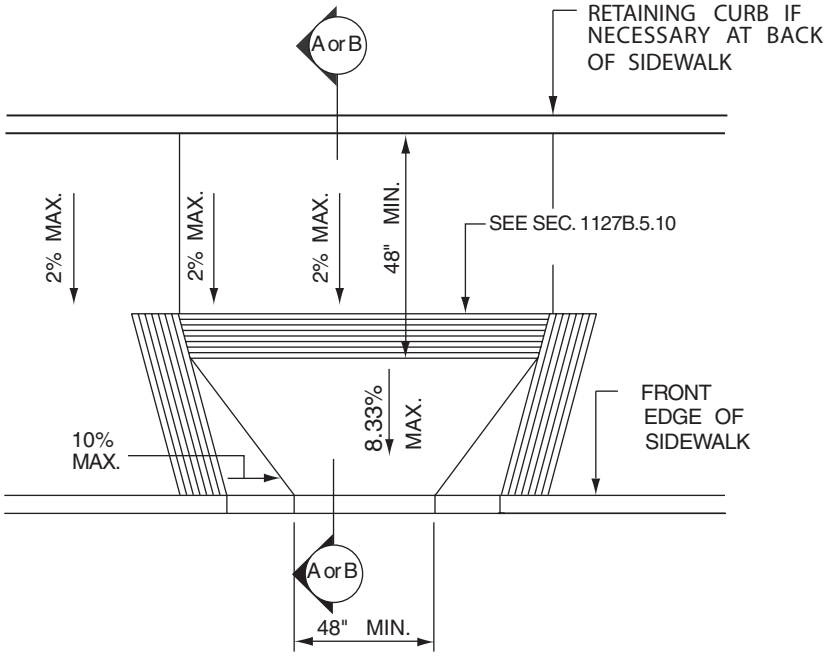

CASE B

THESE DIAGRAMS ILLUSTRATE THE SPECIFIC REQUIREMENTS OF THESE REGULATIONS AND ARE INTENDED ONLY AS AN AID FOR BUILDING DESIGN AND CONSTRUCTION.

FIGURE 11B-20A—CURB DETAIL—CASES A AND B

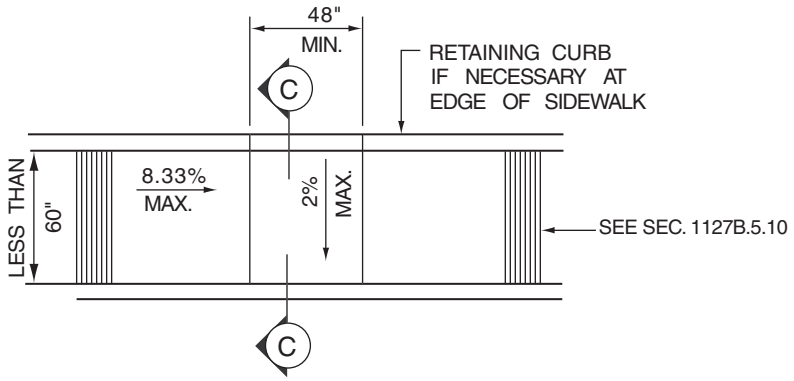

CASE C

SIDEWALK LESS THAN 60" WIDE

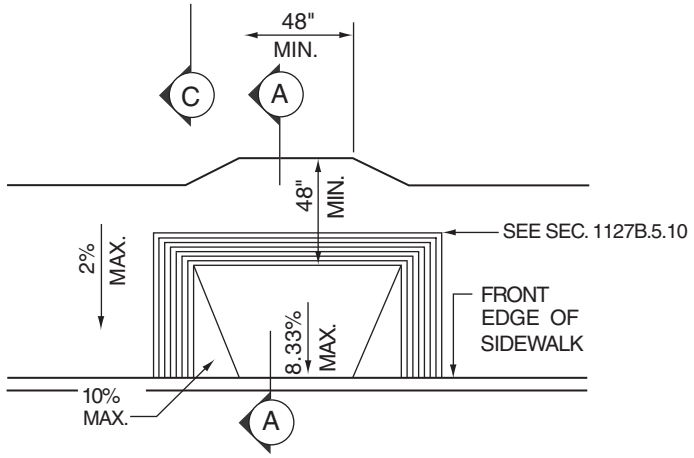

CASE D

THESE DIAGRAMS ILLUSTRATE THE SPECIFIC REQUIREMENTS OF THESE REGULATIONS AND ARE INTENDED ONLY AS AN AID FOR BUILDING DESIGN AND CONSTRUCTION.

FIGURE 11B-20B—CURB DETAIL—CASES C AND D

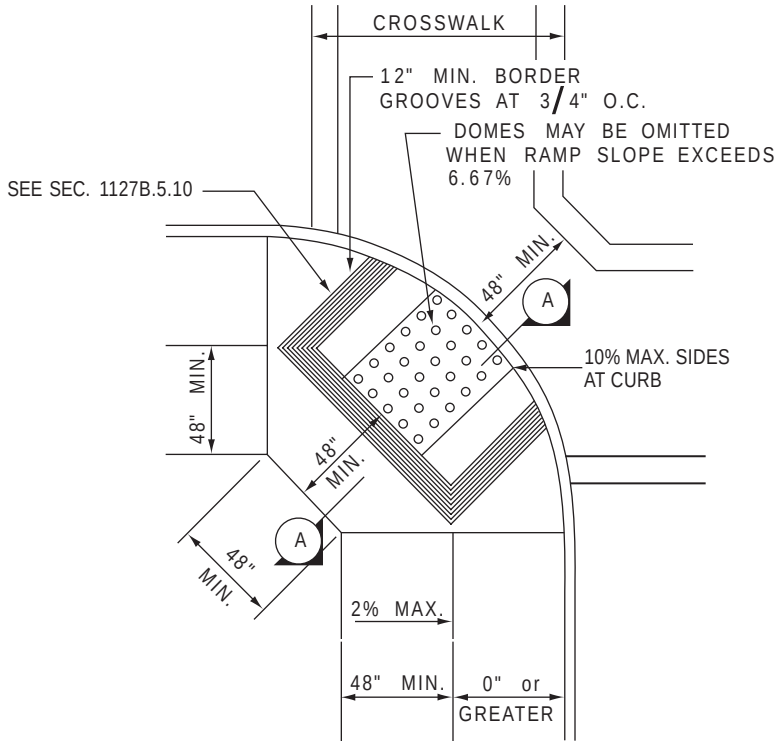

CASE E

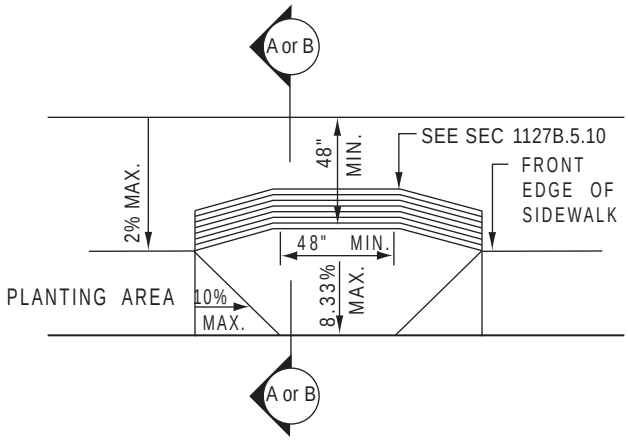

CASE F

THESE DIAGRAMS ILLUSTRATE THE SPECIFIC REQUIREMENTS OF THESE REGULATIONS AND ARE INTENDED ONLY AS AN AID FOR BUILDING DESIGN AND CONSTRUCTION.

FIGURE 11B-20C—CURB DETAIL—CASES E AND F

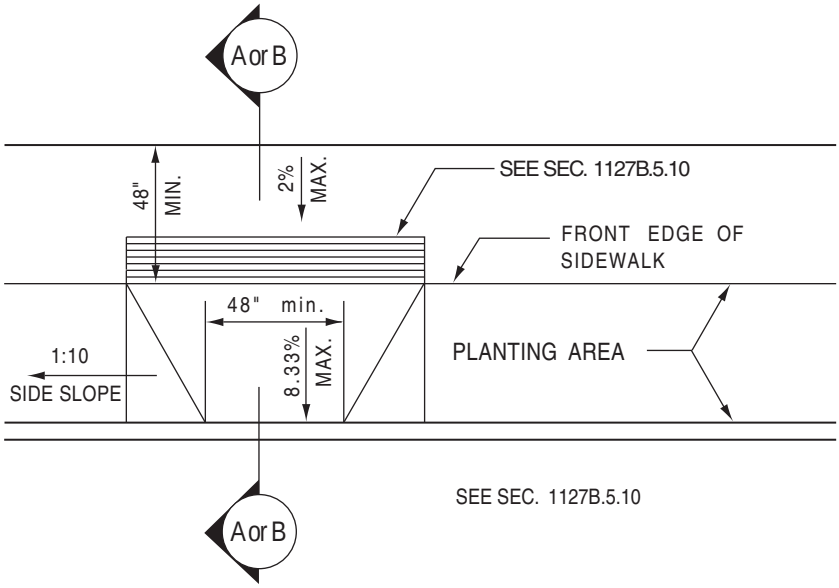

CASE G

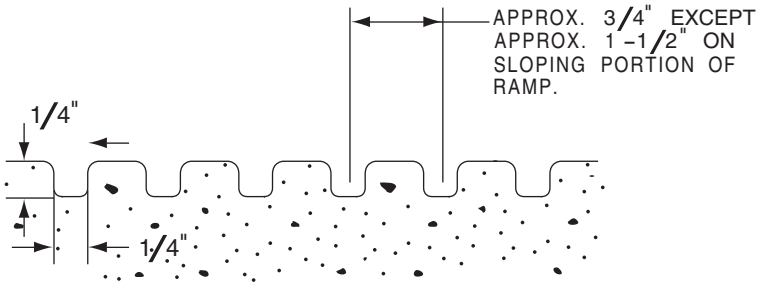

GROOVING DETAIL

CASE H

THESE DIAGRAMS ILLUSTRATE THE SPECIFIC REQUIREMENTS OF THESE REGULATIONS AND ARE INTENDED ONLY AS AN AID FOR BUILDING DESIGN AND CONSTRUCTION.

FIGURE 11B-20D—CURB DETAIL—CASES G AND H

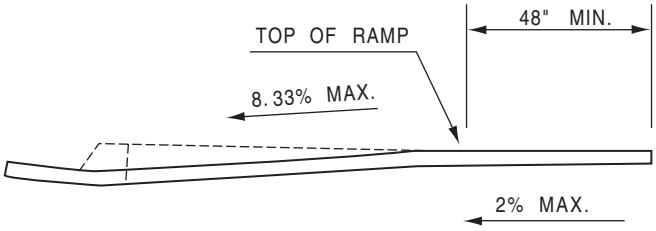

SECTION A–A

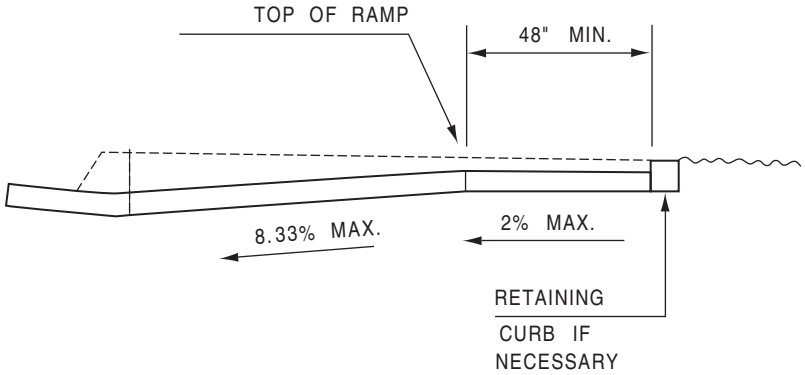

SECTION B–B

DEPRESS ENTIRE SIDEWALK AS REQUIRED

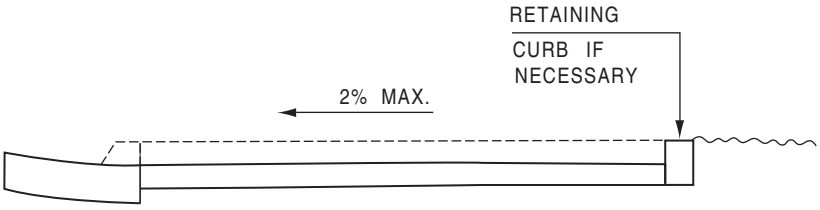

SECTION C–C

THESE DIAGRAMS ILLUSTRATE THE SPECIFIC REQUIREMENTS OF THESE REGULATIONS AND ARE INTENDED ONLY AS AN AID FOR BUILDING DESIGN AND CONSTRUCTION.

FIGURE 11B-20E—CURB SECTIONS

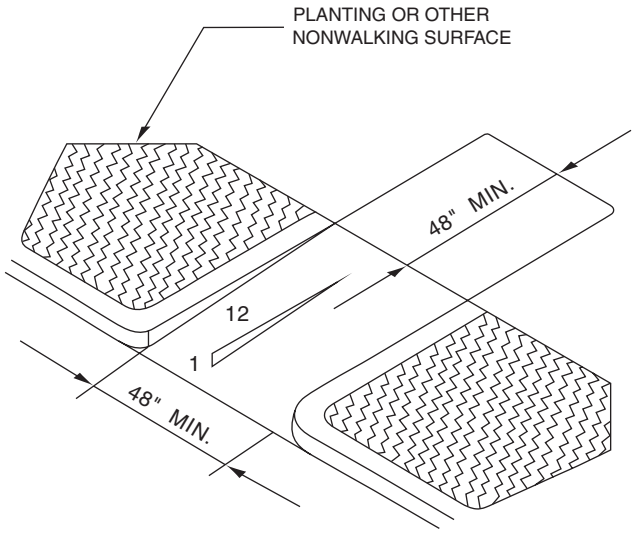

(a)

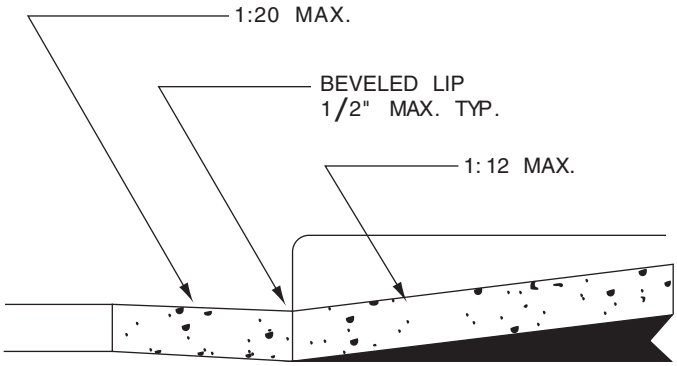

(b)

THESE DIAGRAMS ILLUSTRATE THE SPECIFIC REQUIREMENTS OF THESE REGULATIONS AND ARE INTENDED ONLY AS AN AID FOR BUILDING DESIGN AND CONSTRUCTION.

FIGURE 11B-21—RETURNED CURB STYLE

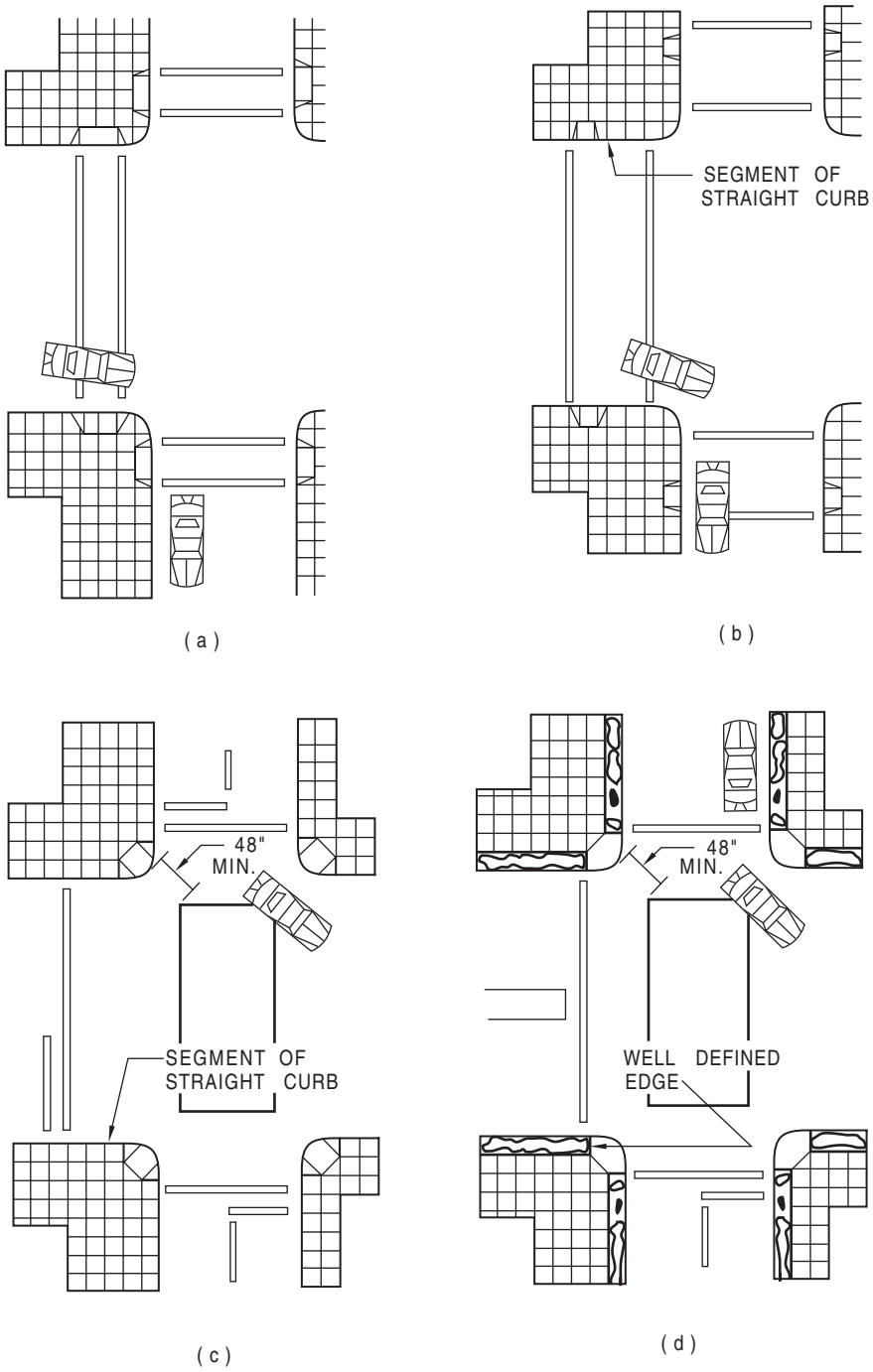

THESE DIAGRAMS ILLUSTRATE THE SPECIFIC REQUIREMENTS OF THESE REGULATIONS AND ARE INTENDED ONLY AS AN AID FOR BUILDING DESIGN AND CONSTRUCTION.

FIGURE 11B-22—CURB RAMPS AT MARKED CROSSING

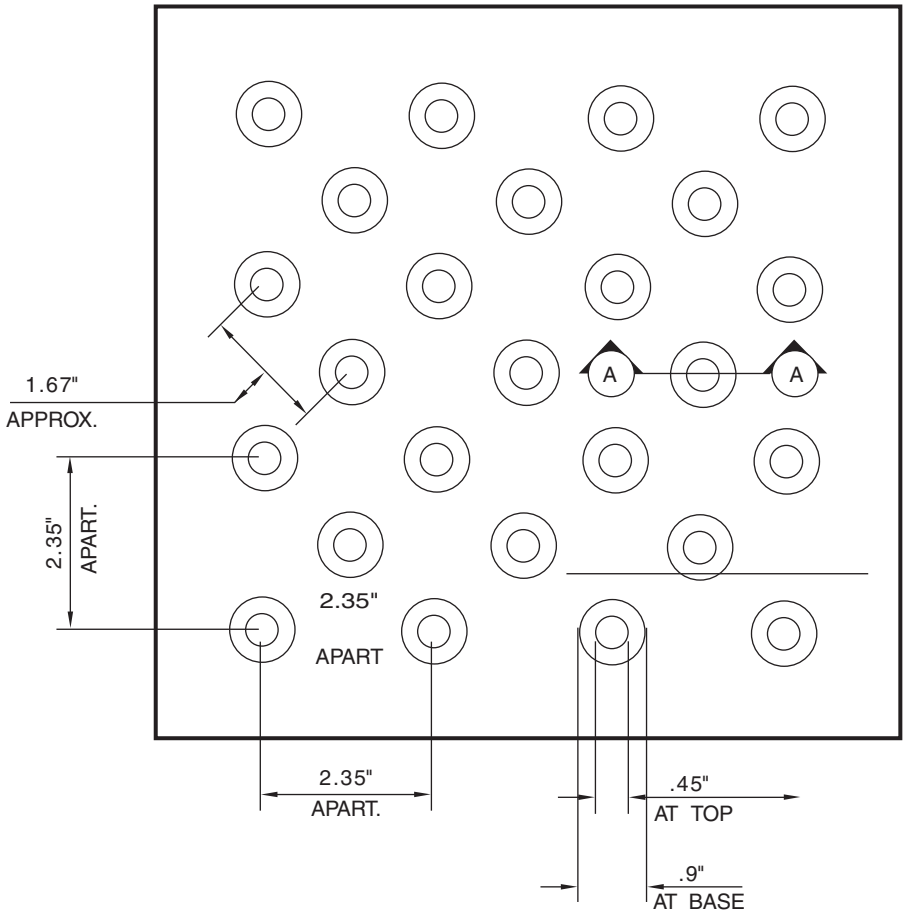

TYPICAL PLAN

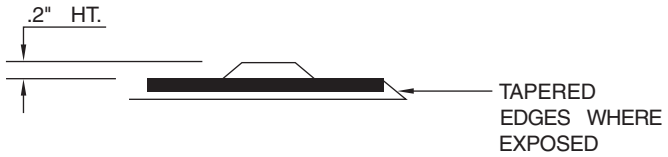

TYPICAL SECTION A–A

THESE DIAGRAMS ILLUSTRATE THE SPECIFIC REQUIREMENTS OF THESE REGULATIONS AND ARE INTENDED ONLY AS AN AID FOR BUILDING DESIGN AND CONSTRUCTION.

FIGURE 11B-23A—TRUNCATED DOMES

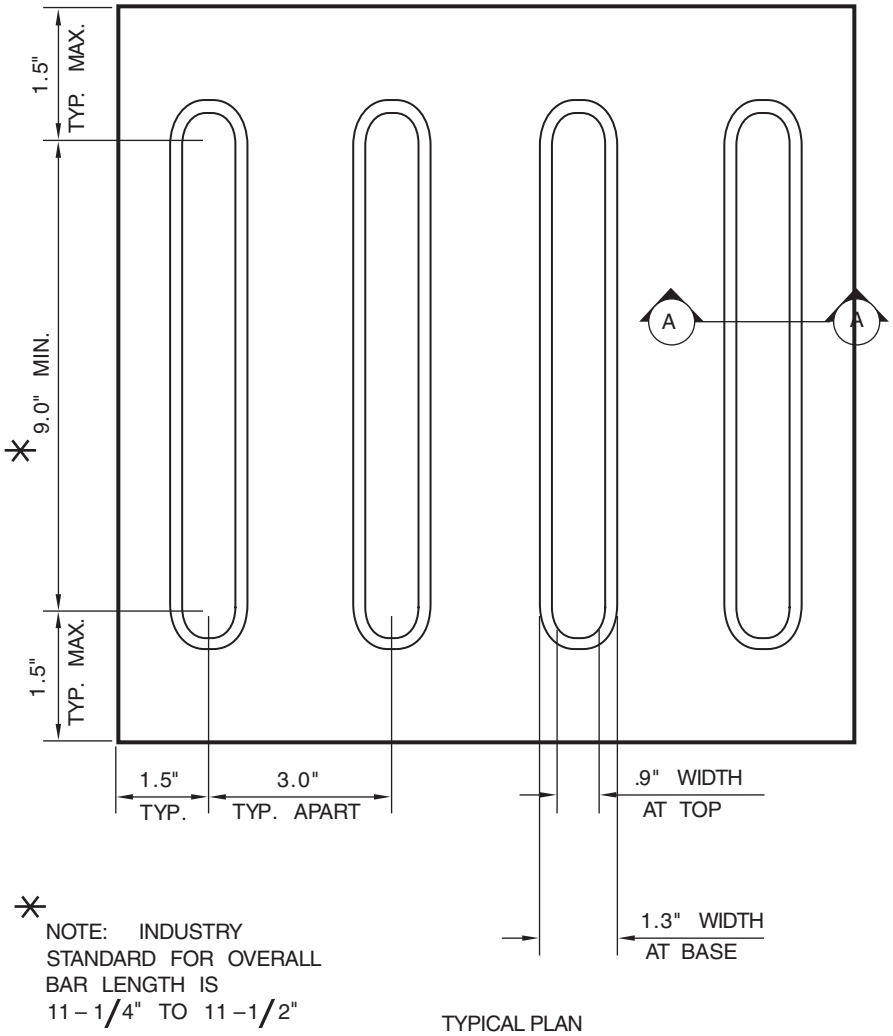

TYPICAL PLAN

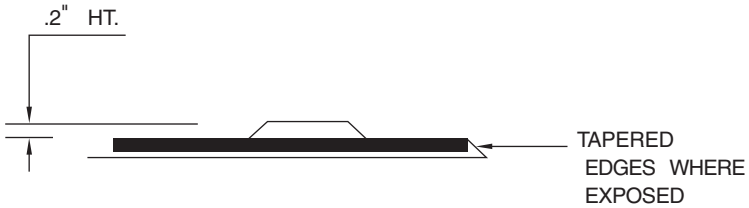

TYPICAL SECTION A–A

THESE DIAGRAMS ILLUSTRATE THE SPECIFIC REQUIREMENTS OF THESE REGULATIONS AND ARE INTENDED ONLY AS AN AID FOR BUILDING DESIGN AND CONSTRUCTION.

FIGURE 11B-23B—DIRECTIONAL BARS

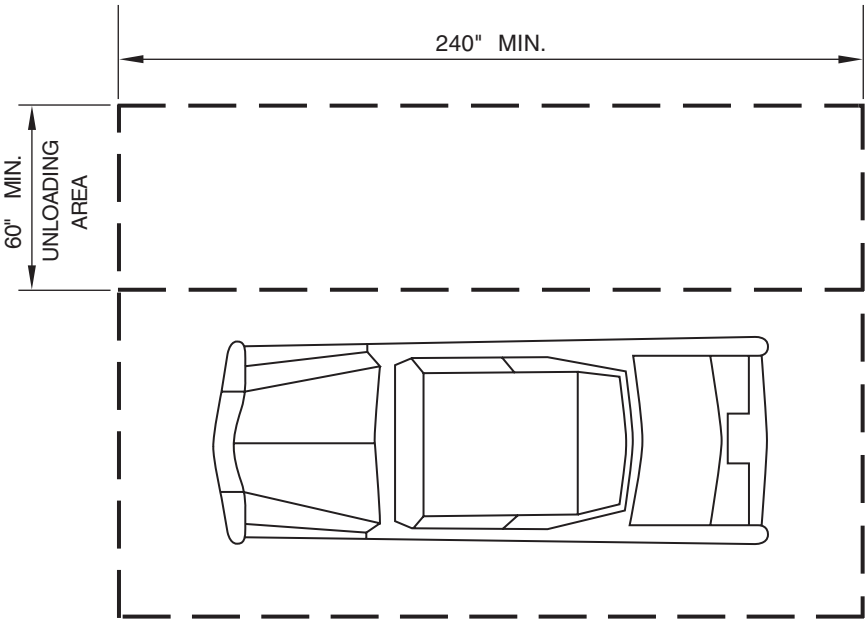

THIS DIAGRAM ILLUSTRATES THE SPECIFIC REQUIREMENTS OF THESE REGULATIONS AND IS INTENDED ONLY AS AN AID FOR BUILDING DESIGN AND CONSTRUCTION.

FIGURE 11B-24—ACCESS AISLE AT PASSENGER LOADING ZONES

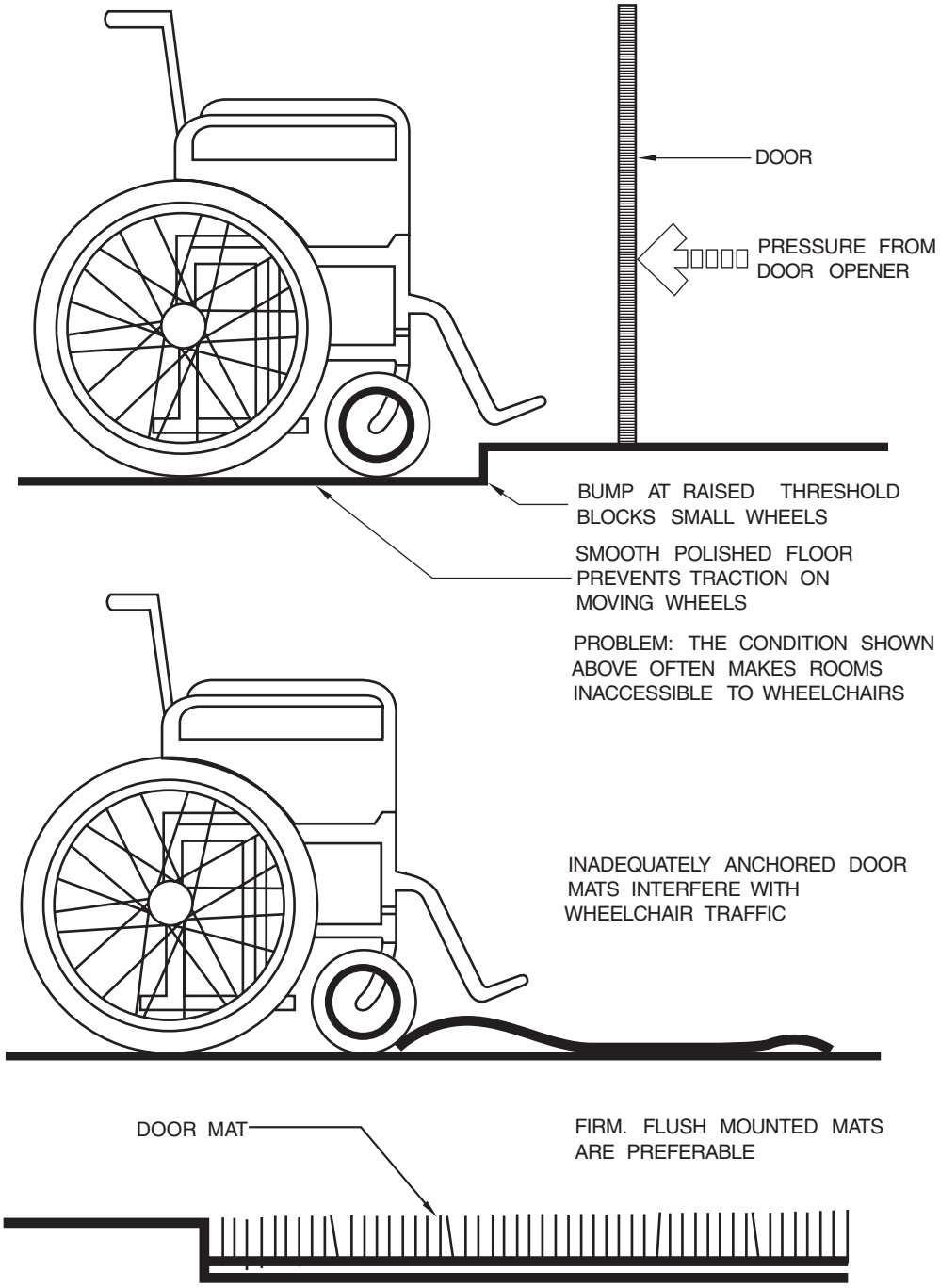

THESE DIAGRAMS ILLUSTRATE THE SPECIFIC REQUIREMENTS OF THESE REGULATIONS AND ARE INTENDED ONLY AS AN AID FOR BUILDING DESIGN AND CONSTRUCTION.

FIGURE 11B-25—OBSTRUCTIONS

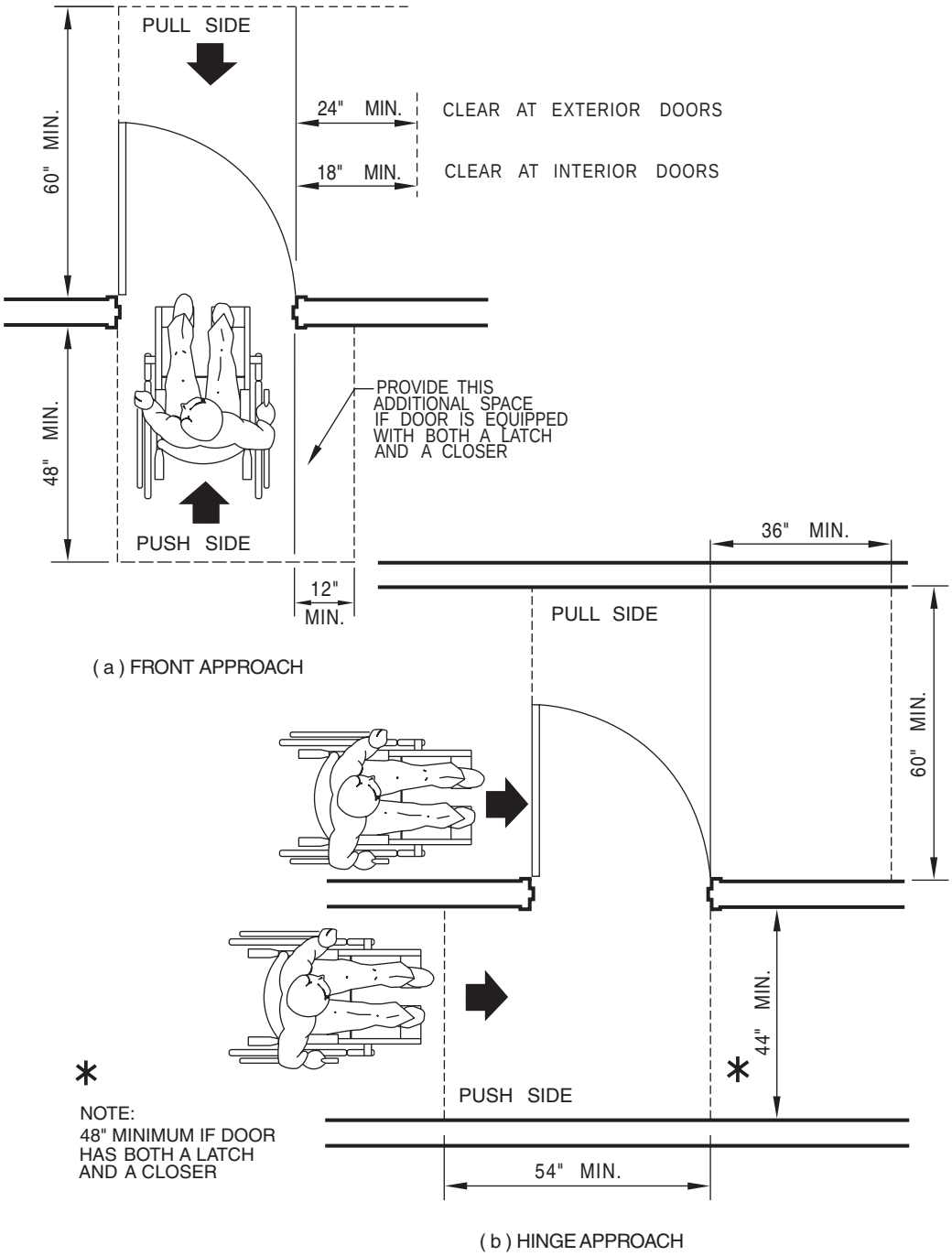

THESE DIAGRAMS ILLUSTRATE THE SPECIFIC REQUIREMENTS OF THESE REGULATIONS AND ARE INTENDED ONLY AS AN AID FOR BUILDING DESIGN AND CONSTRUCTION.

FIGURE 11B-26A—LEVEL MANEUVERING CLEARANCE AT DOORS (Continued)

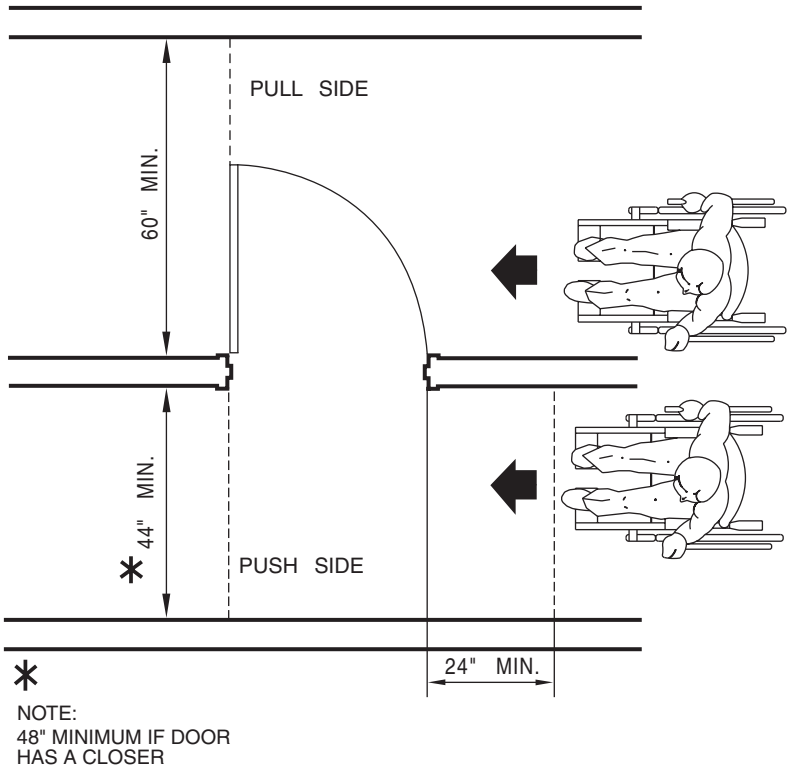

(c) LATCH APPROACH

THIS DIAGRAM ILLUSTRATES THE SPECIFIC REQUIREMENTS OF THESE REGULATIONS AND IS INTENDED ONLY AS AN AID FOR BUILDING DESIGN AND CONSTRUCTION.

FIGURE 11B-26B—LEVEL MANEUVERING CLEARANCE AT DOORS

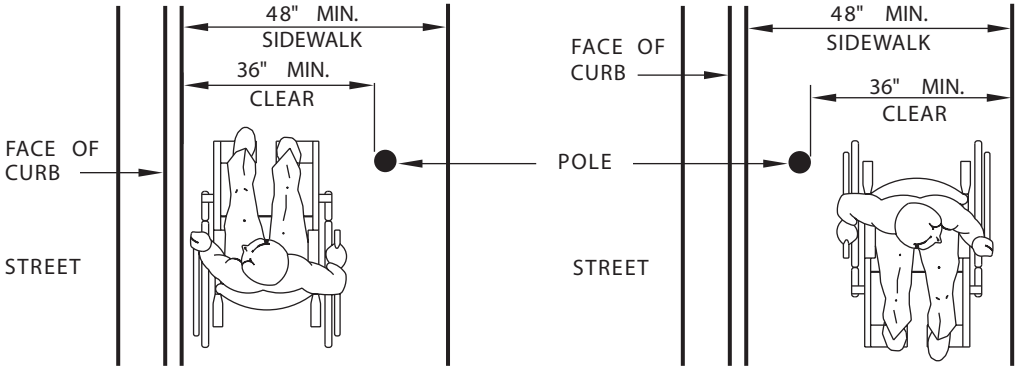

(a) SIDEWALK OBSTRUCTIONS

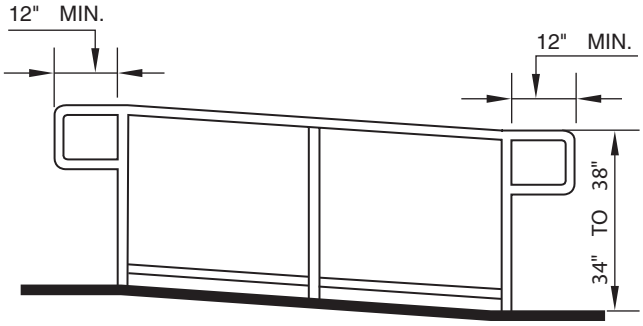

(b) GUIDE RAIL

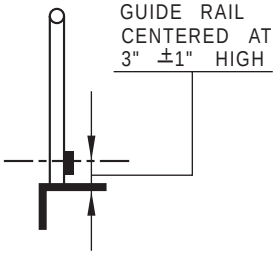

GUIDE RAIL DETAIL

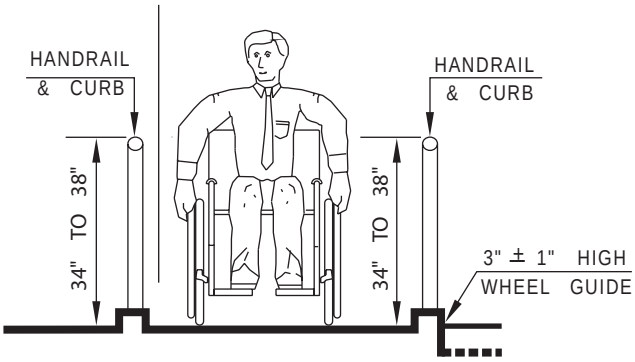

(c) WHEEL GUIDE

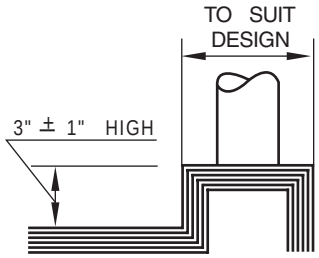

WHEEL GUIDE DETAIL

THESE DIAGRAMS ILLUSTRATE THE SPECIFIC REQUIREMENTS OF THESE REGULATIONS AND ARE INTENDED ONLY AS AN AID FOR BUILDING DESIGN AND CONSTRUCTION.

FIGURE 11B-27—RAMPS AND SIDEWALKS

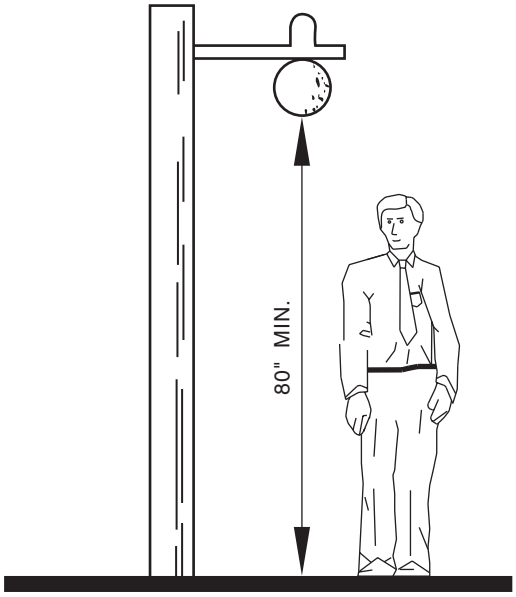

THIS DIAGRAM ILLUSTRATES THE SPECIFIC REQUIREMENTS OF THESE REGULATIONS AND IS INTENDED ONLY AS AN AID FOR BUILDING DESIGN AND CONSTRUCTION.

FIGURE 11B-28—OVERHANGING OBSTRUCTION

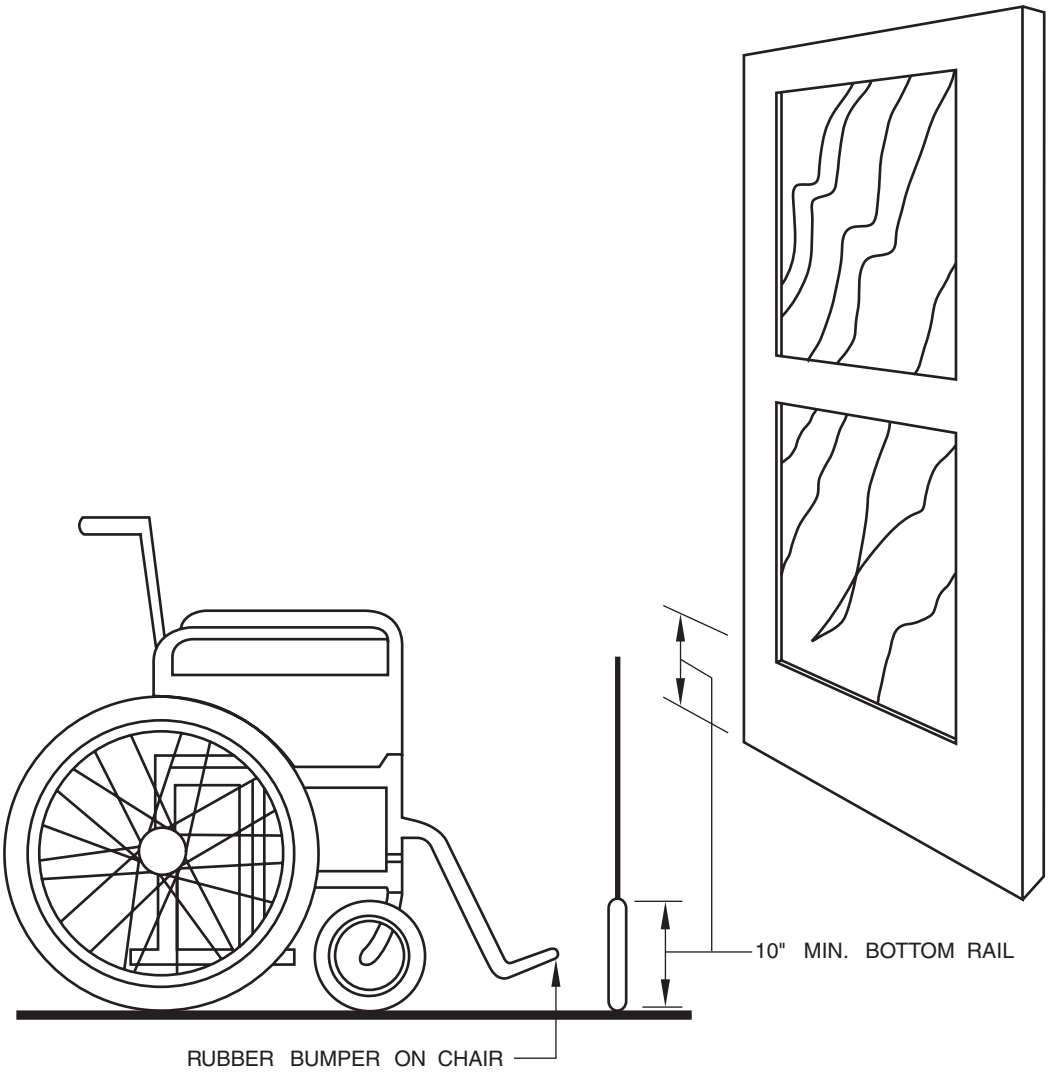

THIS DIAGRAM ILLUSTRATES THE SPECIFIC REQUIREMENTS OF THESE REGULATIONS AND IS INTENDED ONLY AS AN AID FOR BUILDING DESIGN AND CONSTRUCTION.

FIGURE 11B-29—DOOR CONSTRUCTION

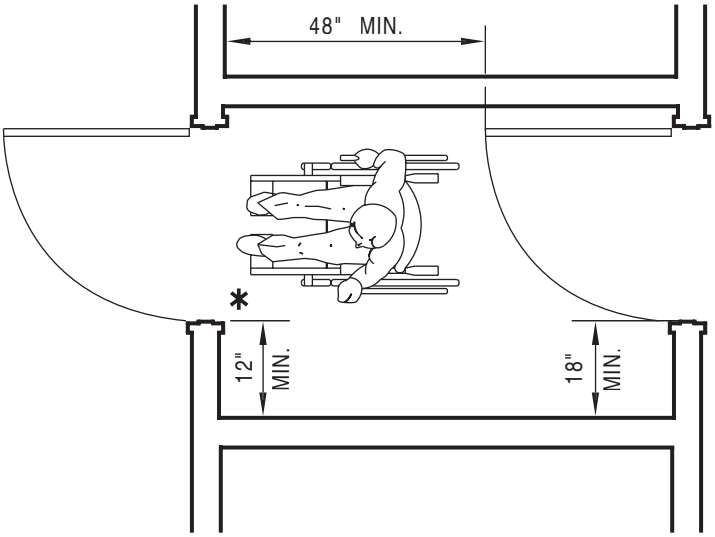

(a) DOOR IN SERIES

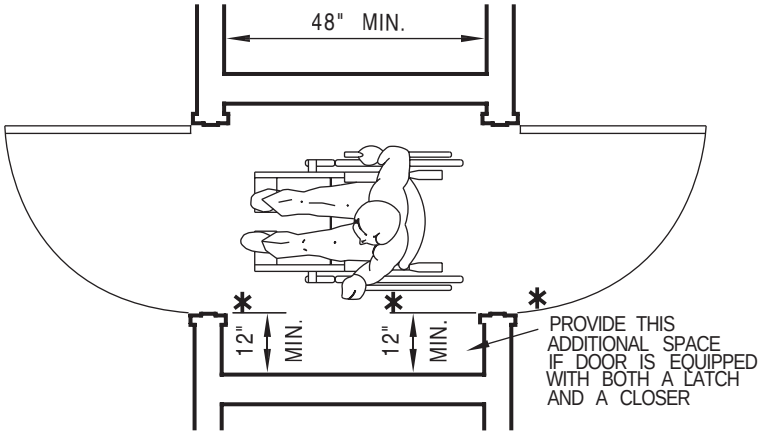

(b) BOTH DOORS OPEN OUT

(SERVING OTHER THAN A REQUIRED EXIT STAIRWAY)

THESE DIAGRAMS ILLUSTRATE THE SPECIFIC REQUIREMENTS OF THESE REGULATIONS AND ARE INTENDED ONLY AS AN AID FOR BUILDING DESIGN AND CONSTRUCTION.

FIGURE 11B-30—VESTIBULE

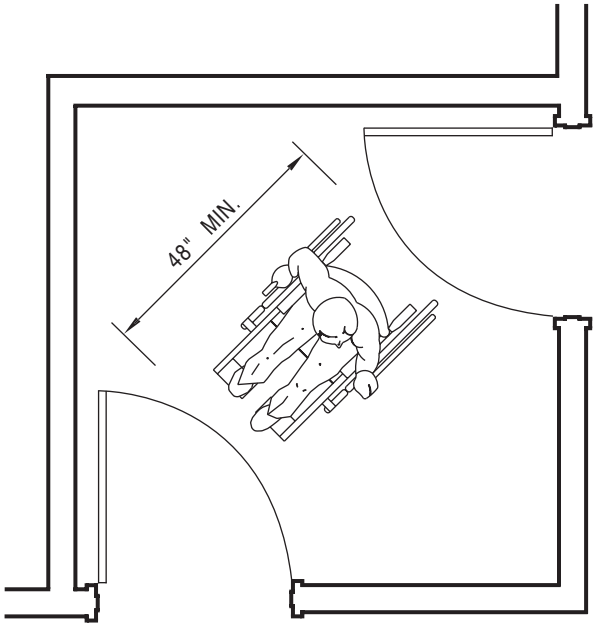

(a) DOORS AT ADJACENT WALLS

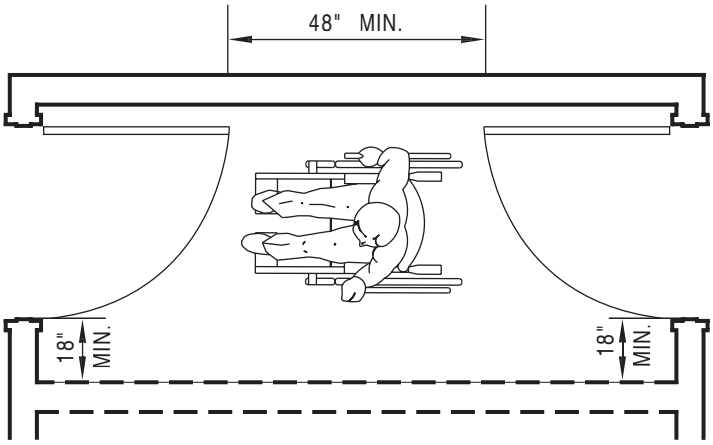

(b) DOORS AT OPPOSITE WALLS

THESE DIAGRAMS ILLUSTRATE THE SPECIFIC REQUIREMENTS OF THESE REGULATIONS AND ARE INTENDED ONLY AS AN AID FOR BUILDING DESIGN AND CONSTRUCTION.

FIGURE 11B-31—VESTIBULE
(SERVING OTHER THAN A REQUIRED EXIT STAIRWAY)

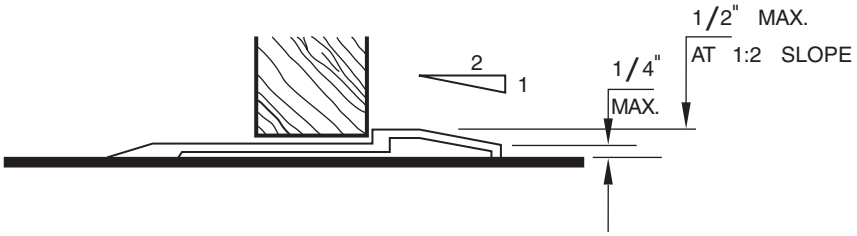

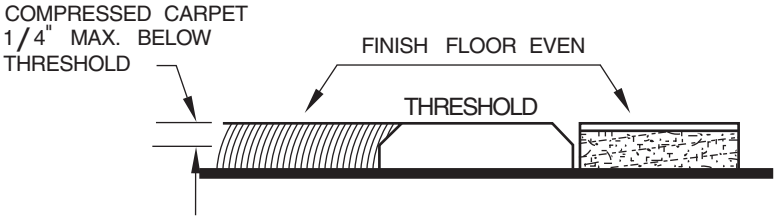

THESE DIAGRAMS ILLUSTRATE THE SPECIFIC REQUIREMENTS OF THESE REGULATIONS AND ARE INTENDED ONLY AS AN AID FOR BUILDING DESIGN AND CONSTRUCTION.

FIGURE 11B-32—THRESHOLDS

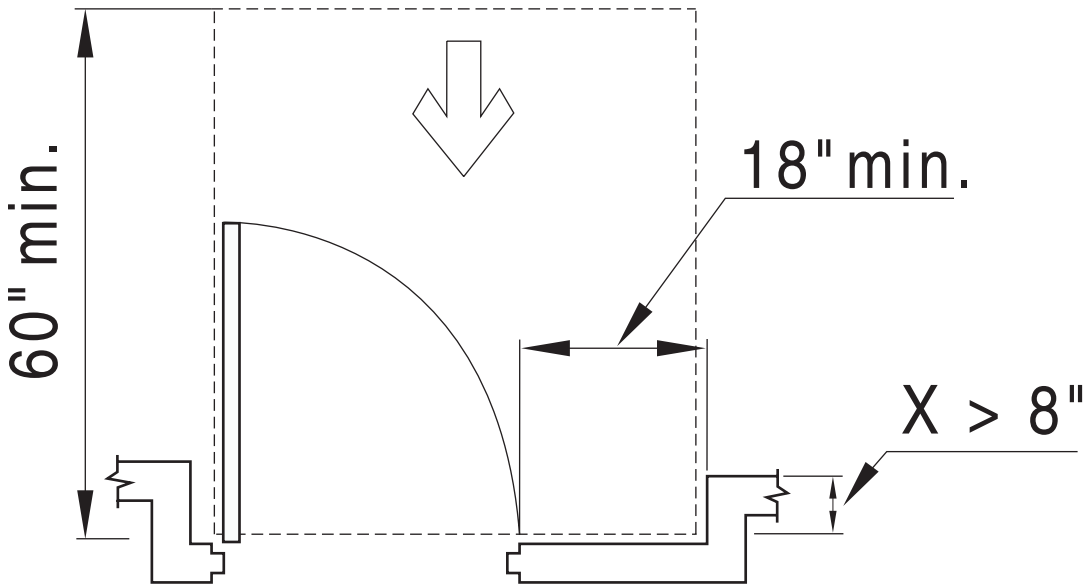

(a) PULL SIDE (INTERIOR DOOR)

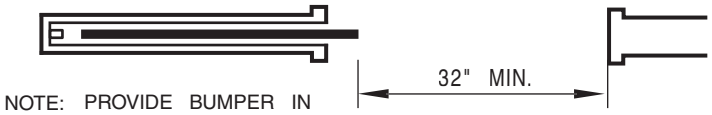

NOTE: PROVIDE BUMPER IN POCKET TO PREVENT DOOR FROM FULLY RECEDING

(b) SLIDING DOOR

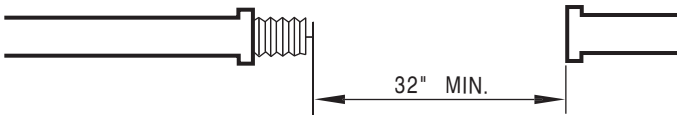

(c) FOLDING DOOR

THESE DIAGRAMS ILLUSTRATE THE SPECIFIC REQUIREMENTS OF THESE REGULATIONS AND ARE INTENDED ONLY AS AN AID FOR BUILDING DESIGN AND CONSTRUCTION.

FIGURE 11B-33—CLEAR DOOR WIDTH AND DEPTH

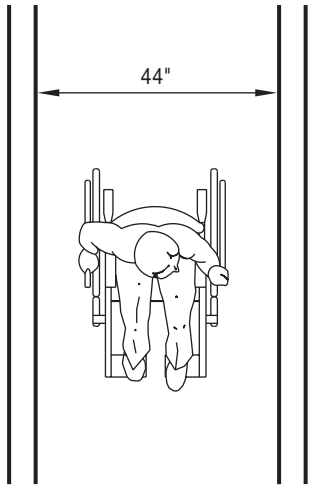

MINIMUM CORRIDOR WIDTH

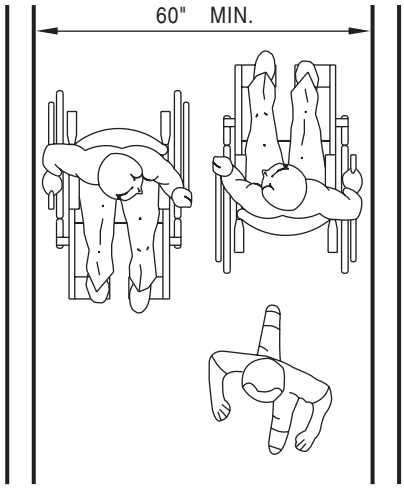

MINIMUM WIDTH FOR
CORRIDORS OVER 200

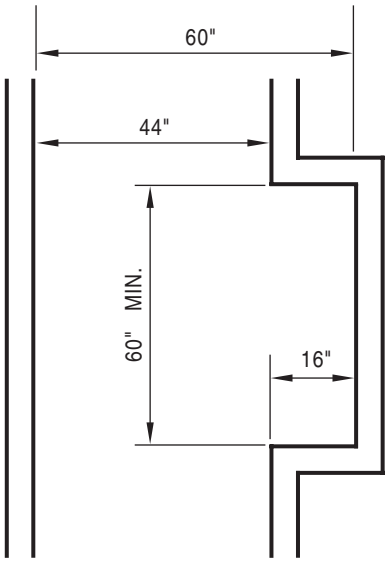

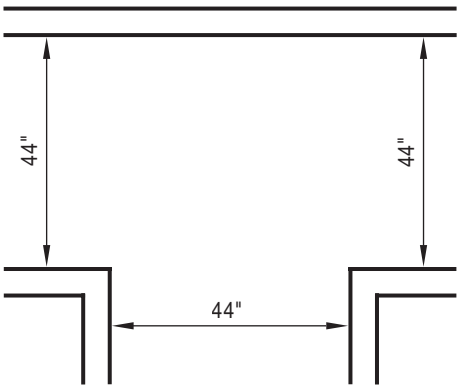

PASSING ALCOVES FOR CORRIDORS OVER
200' IN LIEU OF 60" MIN. WIDTH

THESE DIAGRAMS ILLUSTRATE THE SPECIFIC REQUIREMENTS OF THESE REGULATIONS AND ARE INTENDED ONLY AS AN AID FOR BUILDING DESIGN AND CONSTRUCTION.

FIGURE 11B-34—CORRIDOR OVER 200 FEET (60 960 mm)

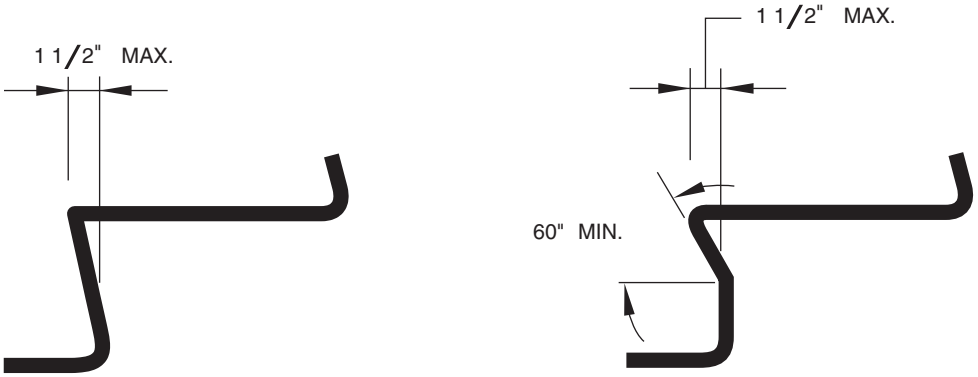

STAIRS

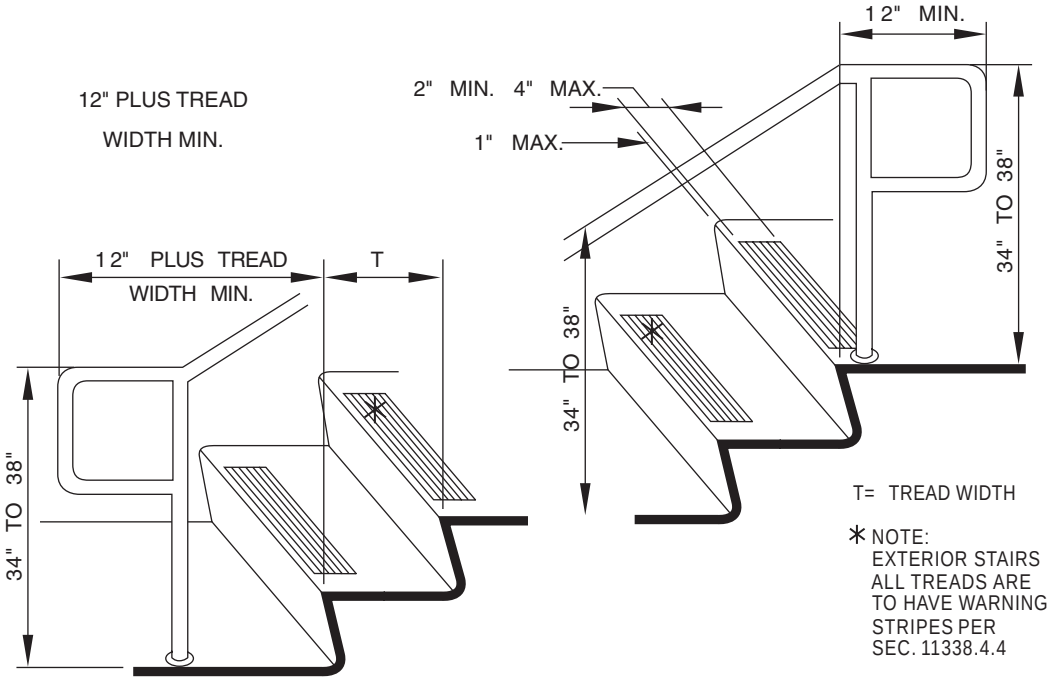

THESE DIAGRAMS ILLUSTRATE THE SPECIFIC REQUIREMENTS OF THESE REGULATIONS AND ARE INTENDED ONLY AS AN AID FOR BUILDING DESIGN AND CONSTRUCTION.

FIGURE 11B-35—WARNING STRIPING AND HANDRAIL EXTENSIONS

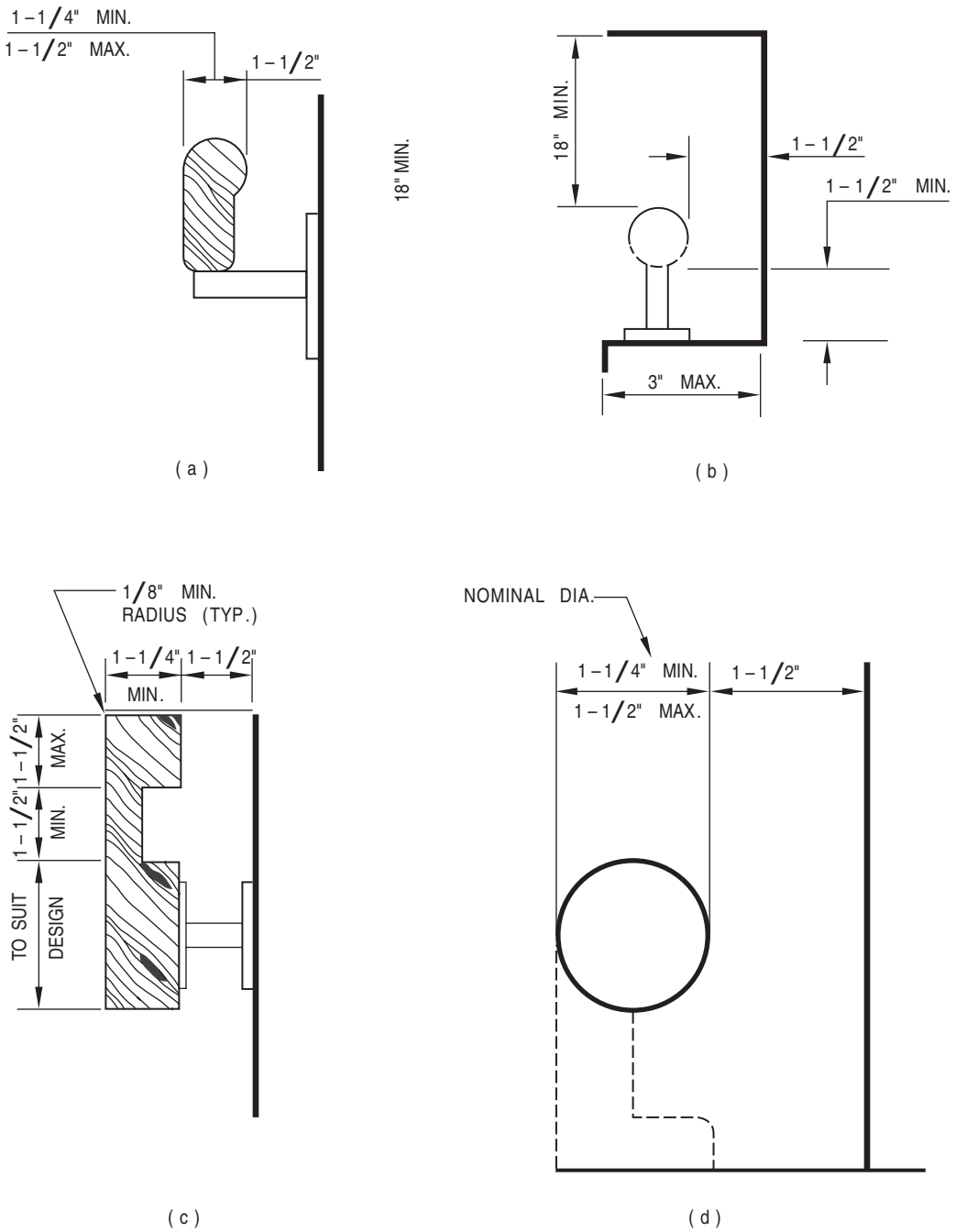

THESE DIAGRAMS ILLUSTRATE THE SPECIFIC REQUIREMENTS OF THESE REGULATIONS AND ARE INTENDED ONLY AS AN AID FOR BUILDING DESIGN AND CONSTRUCTION.

FIGURE 11B-36—STAIR HANDRAILS

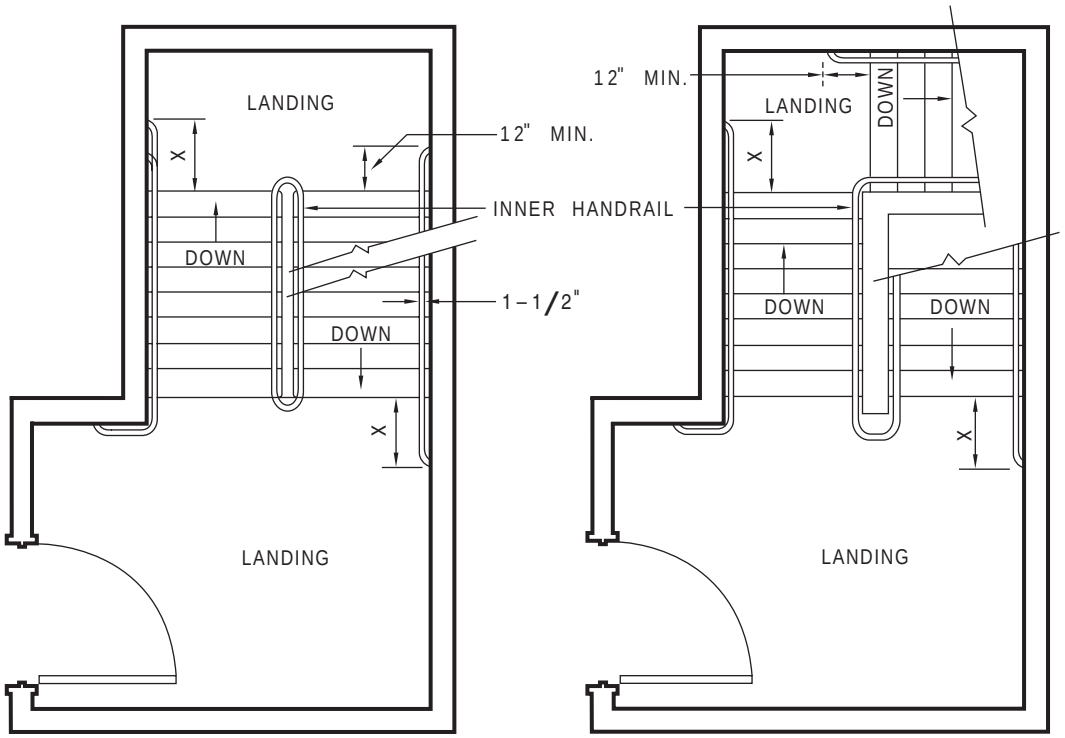

NOTE : INNER HANDRAIL AT LANDINGS OF STAIRS THAT DOUBLE BACK OR IMMEDIATELY TURN SHALL BE CONTINUOUS AND SHALL NOT EXTEND INTO LANDING OR PATH OF TRAVEL.

X : EXTENSION OF HANDRAIL SHALL BE EQUAL TO THE TREAD WIDTH PLUS 12 INCHES.

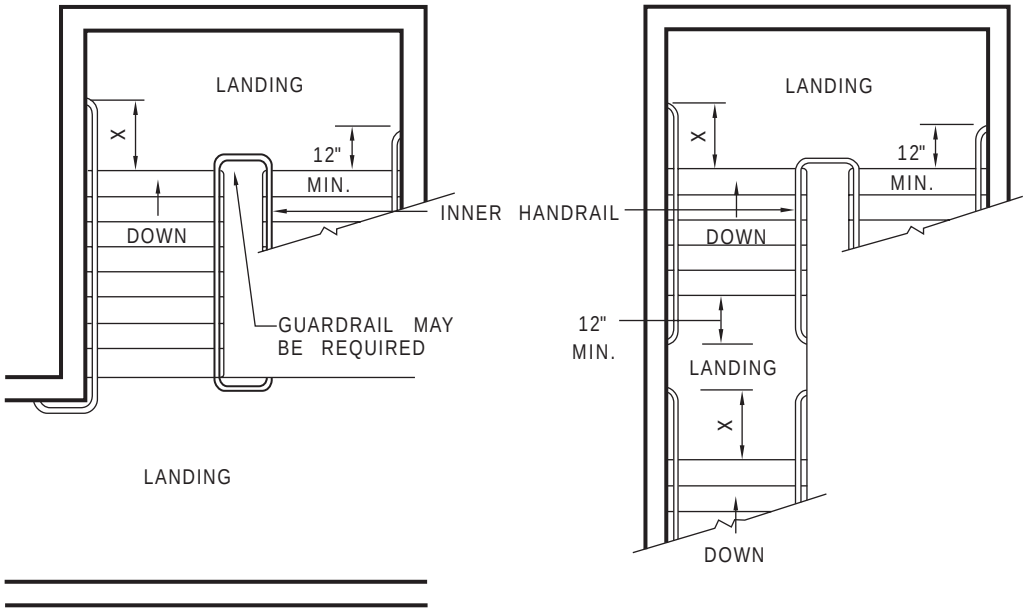

THESE DIAGRAMS ILLUSTRATE THE SPECIFIC REQUIREMENTS OF THESE REGULATIONS AND ARE INTENDED ONLY AS AN AID FOR BUILDING DESIGN AND CONSTRUCTION.

FIGURE 11B-37—STAIR HANDRAILS

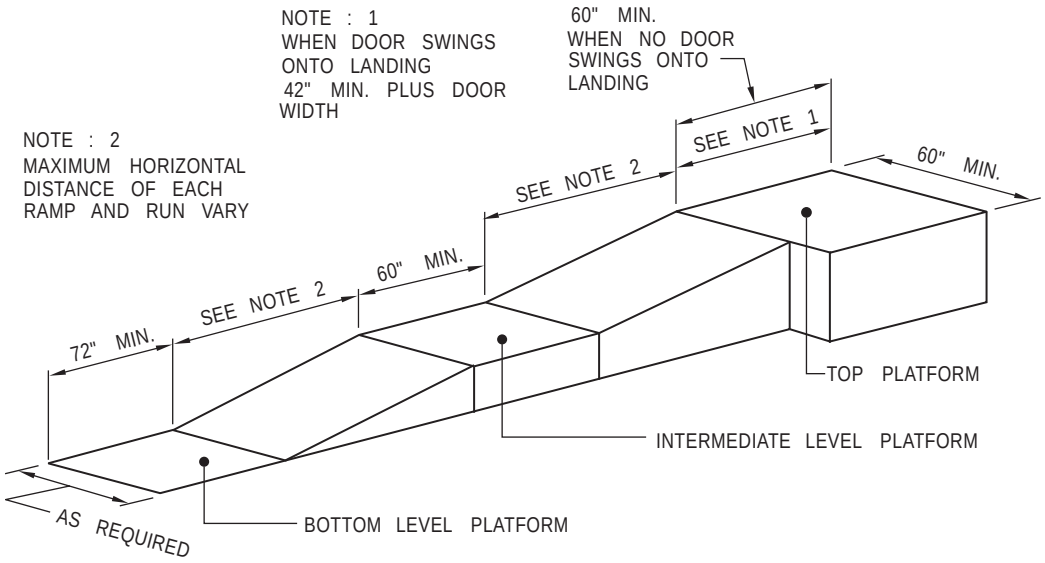

(a) STRAIGHT RAMP RUN

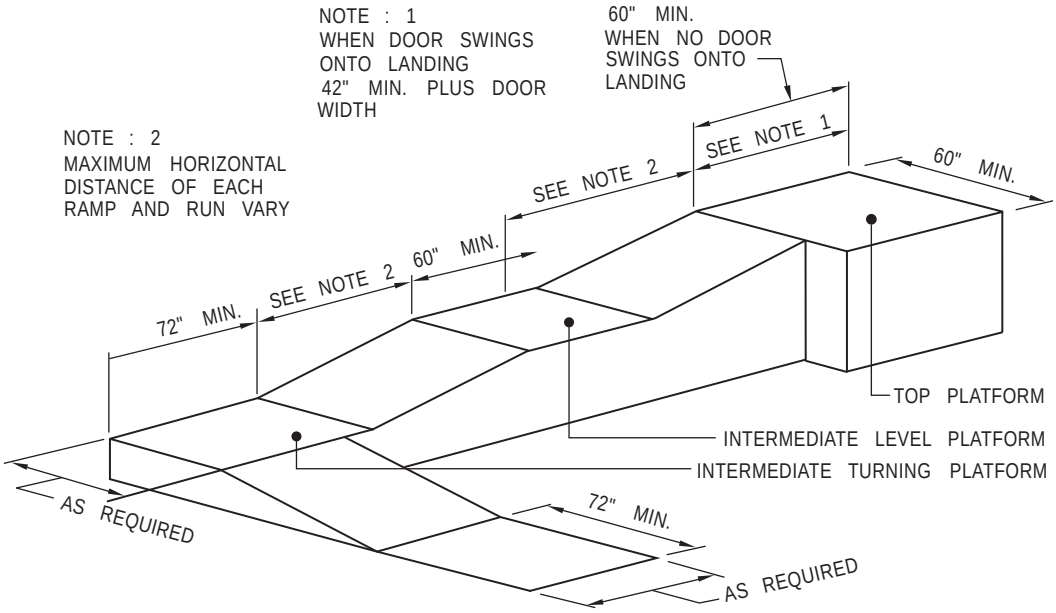

(b) RAMP WITH TURNING PLATFORM

THESE DIAGRAMS ILLUSTRATE THE SPECIFIC REQUIREMENTS OF THESE REGULATIONS AND ARE INTENDED ONLY AS AN AID FOR BUILDING DESIGN AND CONSTRUCTION.

FIGURE 11B-38—RAMP DIMENSIONS

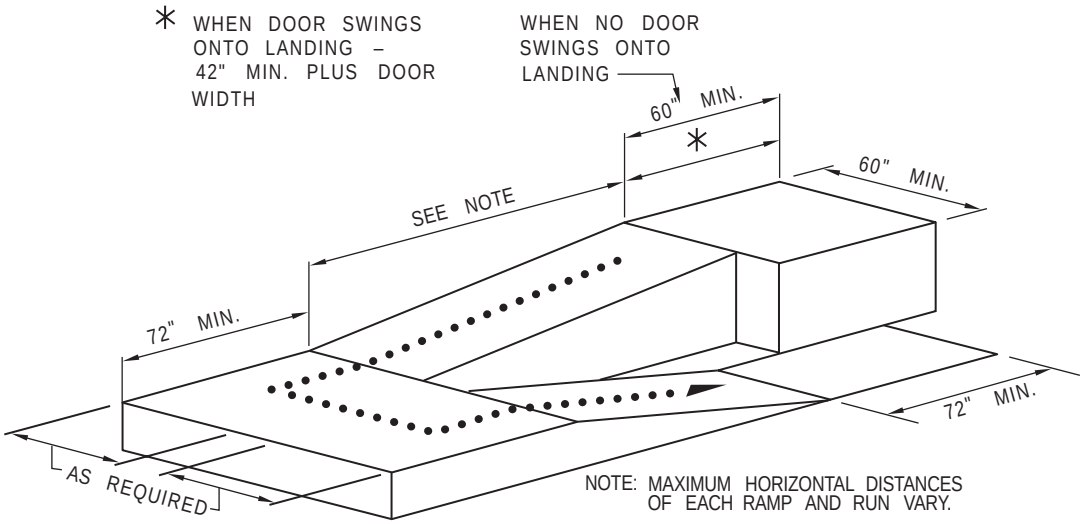

(a) RAMP WITH INTERMEDIATE SWITCH BACK PLATFORM

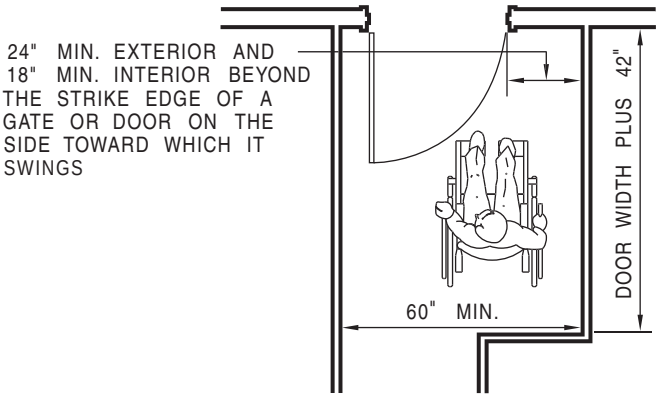

(b) RAMP LANDING AT DOORWAY

THESE DIAGRAMS ILLUSTRATE THE SPECIFIC REQUIREMENTS OF THESE REGULATIONS AND ARE INTENDED ONLY AS AN AID FOR BUILDING DESIGN AND CONSTRUCTION.

FIGURE 11B-39—RAMP LANDING AND DOORWAY

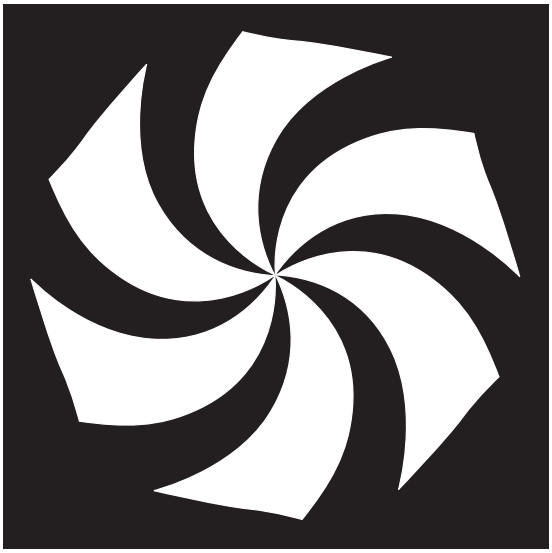

Cleaner Air

FIGURE 11B-40-CLEANER AIR SYMBOL

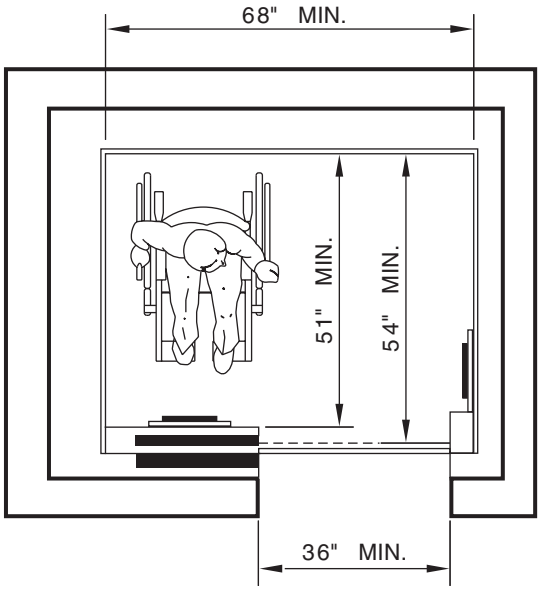

(a) SIDE OPENING DOOR

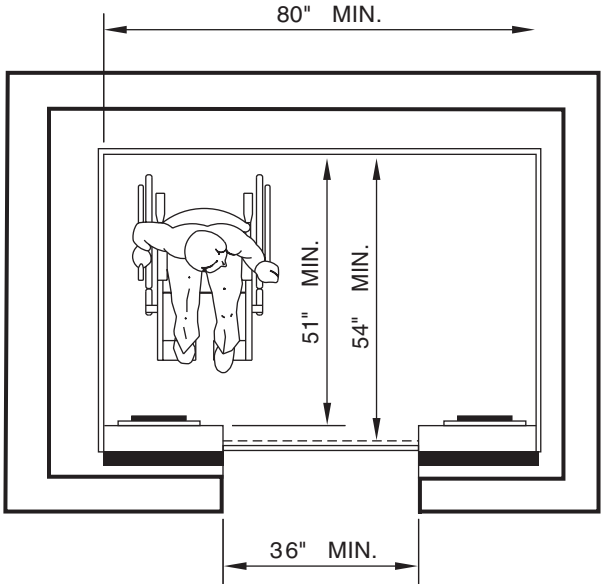

(b) CENTER OPENING DOOR

THIS DIAGRAM ILLUSTRATES THE SPECIFIC REQUIREMENTS OF THESE REGULATIONS AND IS INTENDED ONLY AS AN AID FOR BUILDING DESIGN AND CONSTRUCTION.

FIGURE 11B-40A—MINIMUM DIMENSIONS OF ELEVATOR CARS

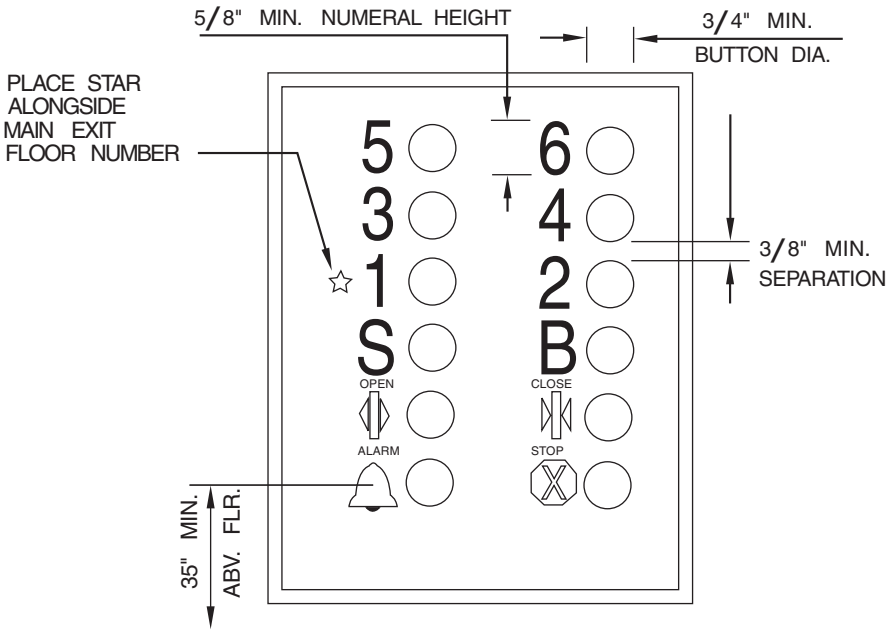

(a) ELEVATOR CONTROL PANEL DETAIL

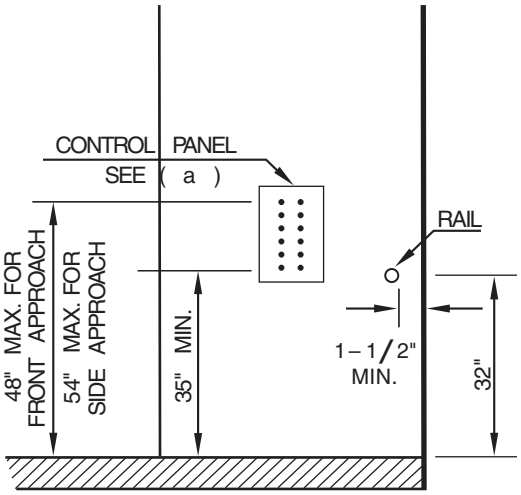

(b) MAXIMUM INSTALLATION HEIGHTS ABOVE CAB FLOOR

THIS DIAGRAM ILLUSTRATES THE SPECIFIC REQUIREMENTS OF THESE REGULATIONS AND IS INTENDED ONLY AS AN AID FOR BUILDING DESIGN AND CONSTRUCTION.

FIGURE 11B-40B—ELEVATOR CONTROL PANEL

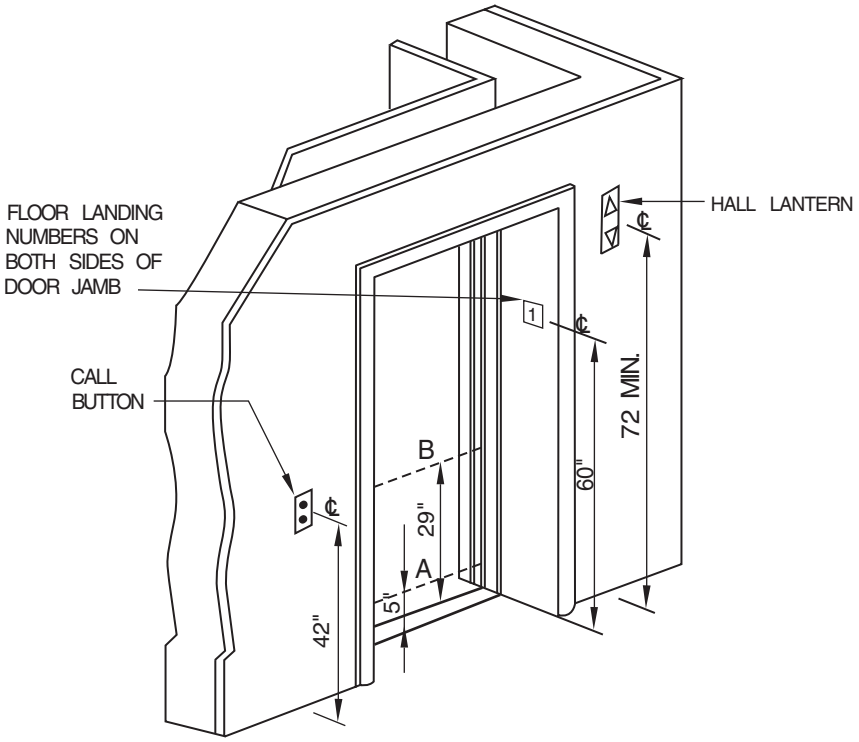

NOTE:
THE AUTOMATIC DOOR REOPENING DEVICE IS ACTIVATED IF AN OBJECT PASSES THROUGH EITHER LINE A OR LINE B. LINE A AND LINE B REPRESENT THE VERTICAL LOCATION OF THE DOOR REOPENING DEVICE NOT REQUIRING CONTACT.

FIGURE 11B-40C—HOISTWAY AND ELEVATOR ENTRANCES

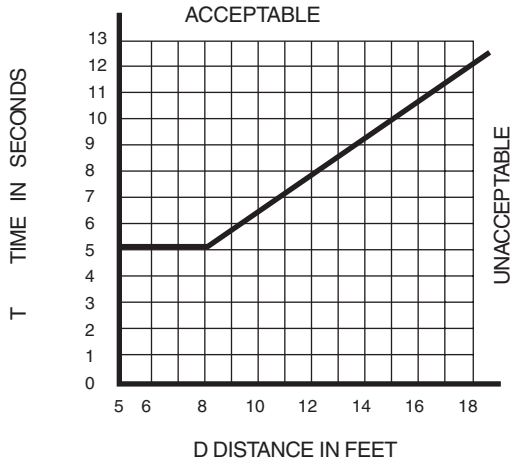

THIS DIAGRAM ILLUSTRATES THE SPECIFIC REQUIREMENTS OF THESE REGULATIONS AND IS INTENDED ONLY AS AN AID FOR BUILDING DESIGN AND CONSTRUCTION.

FIGURE 11B-40D—GRAPH OF TIMING EQUATION

Chapter 11C [For DSA/AC]
STANDARDS FOR CARD READERS AT GASOLINE FUEL DISPENSING FACILITIES

SECTION 1101C – CARD–READER DEVICES AT FUEL DISPENSING EQUIPMENT

1101C.1 General. *Notwithstanding other requirements in the California Building Code (CBC), only the requirements and additional definitions in this section shall apply to card–reading devices in motor vehicle fuel facilities, except that administrative requirements which are found in Chapter 1 still apply.*

For purposes of this section, the following additional definitions shall apply:

ACCESSIBLE*. See 11A, Section 1102A.1-A and Chapter 11B, Section 1102B.*

ACCESSIBLE ELEMENT*. See Chapter 2, Section 202-A.*

ALTERNATE CARD READER *shall be defined in this section as functionally equal card reader and control directly attached to or an integral part of the fuel dispenser in addition to the primary card reader which is in integral part of the dispenser.*

FREE–STANDING PEDESTAL *is a card–reading device which controls one or more remote fuel dispensers that have no card reader as an integral part of the fuel dispenser.*

GRADE*. See Chapter 2, Section 208-G.*

INTERNATIONAL SYMBOL OF ACCESSIBILITY*. See Chapter 11A, Section1102A.9-I and Chapter 11B, Section 1102B.*

LEVEL ACCESSIBLE AREA, *for the purposes of this section, shall mean a slope of not more than 2 percent in front of the dispensing device; however, the slope may extend to 5 percent where the enforcing authority determines that, due to unusual site conditions, the 2 percent gradient is not obtainable.*

LEVEL AREA *See Chapter 11A, Section 1102A.12-L and Chapter 11B, Section 1102B.*

PATH OF TRAVEL *shall include the clearance requirements stated in Chapter 11B for Wheelchair Passage Width, and Relationship of Maneuvering Clearances to Wheelchair Spaces, except that pump nozzles and hoses may overlap required clearances.*

RECOMMEND *See Chapter 2, Section 219-R.*

TYPE OF MOTOR FUEL *shall mean gasoline, diesel, compressed natural gas, methanol, electricity or ethanol.*

SECTION 1102C – APPLICATION

This section shall apply to equipment located at the following facilities:

1. *New motor vehicle fuel facilities.*

2. *Existing motor vehicle fuel facilities built before the effective date of this section when:*

2.1 *Remodeling or reconstruction includes removal and replacement of one or more islands and associated piping and tank(s); or*

2.2 *Remodeling includes reconstruction or removal and replacement of fuel islands at facilities that provide free–standing pedestal card readers.*

SECTION 1103C – NUMBER OF ACCESSIBLE CARD–READING DEVICES REQUIRED

Where only one card–reading device is installed for use with any type of motor fuel, it shall meet the required features of this section. When more than one card–reading location is available for a specific type of motor fuel, a minimum of two for that type shall have the accessible features of this section.

SECTION 1104C – REQUIRED FEATURES

Card–reading devices at motor vehicle fuel facilities shall be accessible by complying with only the following:

1. *The highest operable part of each primary or alternate card reader shall be no more than 54 inches (1372 mm) measured from the base of the fuel dispenser. Where card readers are located on free–standing pedestals, the card–reading control function shall be no more than 54 inches (1372 mm) above an accessible level area which is served by an accessible path of travel.*

EXCEPTION: *If an enforcing agency requires that fuel dispensers or card–reading devices be placed in a manner where the card–reading device exceeds the requirements described herein, the provisions of Section 1104C do not apply. Any enforcing agency having jurisdiction over retail fueling facilities may not require islands or impose other regulations which conflict with this section, unless the agency documents and justifies the specific necessity for such a rule or ordinance and complies with the requirements of Health and Safety Code Section 18941.*

2. *An accessible path of travel shall be provided to the base of all fuel dispensers required to meet the provisions of this section. Such fuel dispensers shall be mounted on the accessible level area.*

3. *An accessible level area shall be provided which is minimally 30 inches by 48 inches (762 mm by 1219 mm) level and clear. This area shall be provided within 10 inches (254 mm) in plan view of the face of the controls and shall be unobstructed by any features, except pump nozzles and hoses, with the long side of this space parallel to and centered [plus or minus 9 inches (229 mm)] with the face of the card–reader controls. (See Figures 11C–1 and 11C–2.)*

SECTION 1105C – PROTECTION OF DISPENSERS MOUNTED AT GRADE

Dispensers mounted at grade shall be protected from vehicular damage as required by Section 5201.5.1, Part 9, Title 24 (California Fire Code).

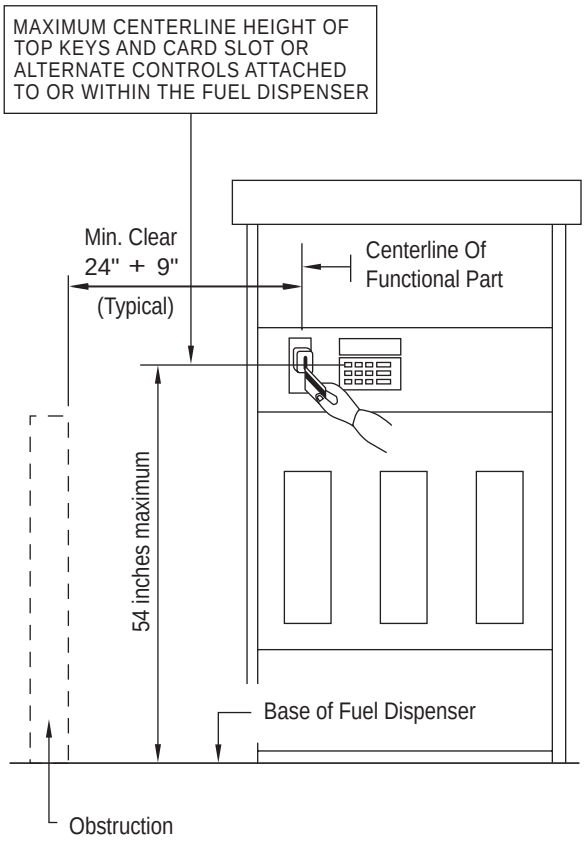

FIGURE 11C-1—CARD READERS MOUNTED IN FUEL DISPENSERS

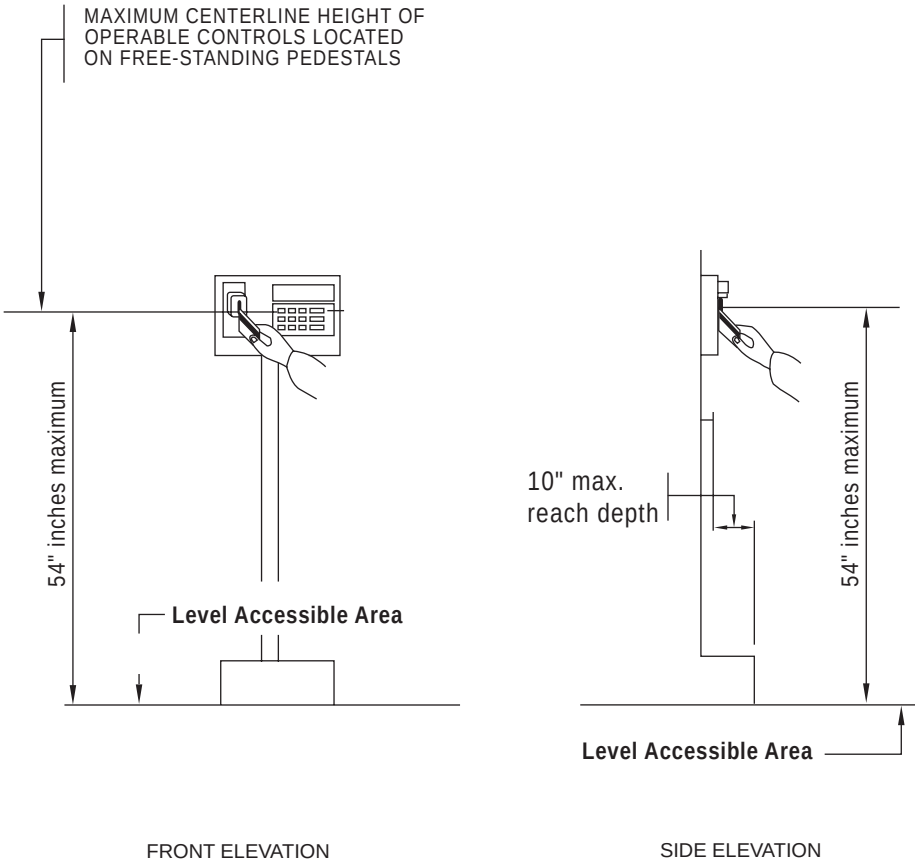

FIGURE 11C-2—CARD READERS LOCATED ON FREE-STANDING PEDESTALS

Chapter 24
[For DSA/AC] GLASS AND GLAZING

[For DSA/AC] NOTE: *Chapter 24 is adopted by reference in Table 1109A.2-1 and 1109A.2-2. The codes, standards and publications adopted and set forth in adopting Chapter 24, including other codes, standards and publication referred to therein are, by title and date of publication, hereby adopted as standard reference documents of this code. See Section 101.7.*

Chapter 29
PLUMBING SYSTEMS

NOTE: *This chapter is not adopted by DSA/AC, see Chapter 11B, Section 1115B.2.*

Chapter 30
ELEVATORS, DUMBWAITERS, ESCALATORS AND MOVING WALKS

SECTION 3001 – SCOPE

The provisions of this chapter shall apply to the design, construction, installation, operation, alteration and repair of elevators, dumbwaiters, escalators and moving walks and their hoistways.

> ***[For DSA/AC] EXCEPTION:*** *For accessibility requirements for special access lifts, see California Code of Regulations, Title 24, Part 7, Article 7-15, Sections 7-3093 through 7-3094.5 and Part 2, Sections 1110A and 1116B.*

3001.1 [For DSA/AC & HCD 1 and HCD 1/AC] Referenced Standards. *For elevators and special access lifts in covered multi-family dwellings see Chapter 11A, Section 1110A. For accessibility requirements for elevators and special access (wheelchair) lifts in public accommodations, commercial buildings, and publicly funded, owned or leased housing, see Chapter 11B, Section 1116B.*

SECTION 3003 – SPECIAL PROVISIONS

3003.4 Size of Cab and Control Locations.

3003.4.1 General. In buildings three or more stories in height served by an elevator or a building served by an elevator required by Chapter 11, at least one elevator serving all floors shall accommodate a wheelchair, in accordance with this section.

> ***[For DSA/AC] EXCEPTION:*** *For accessibility requirements for size of cab and control locations in accessible housing, see Chapter 11A, Section 1110A.1.2 and for public buildings, public accommodations, commercial buildings, and publicly funded housing, see Chapter 11B, Section 1116B.1.1.*

3003.4.2 Operation and leveling. The elevator shall be automatic and be provided with a self-leveling feature that will automatically bring the car to the floor landings within a tolerance of plus or minus 1/2 inch (12.7 mm) under normal loading and unloading conditions. This self-leveling shall, within its zone, be entirely automatic and independent of the operating device and shall correct the overtravel or undertravel. The car shall also be maintained approximately level with the landing, irrespective of load.

> ***[For DSA/AC] EXCEPTION:*** *For accessibility requirements for operation and leveling in accessible housing, see Chapter 11A, Section 1110A.1.3. For public buildings, public accommodations, commercial buildings and publicly funded housing, see Chapter 11B, Section 1116B.1.2.*

3003.4.4 Door size. Minimum clear width for elevator doors shall be 36 inches (914 mm).

> **EXCEPTIONS:**
> **1.** When approved by the building official, the minimum door width may be reduced to 32 inches (813 mm) for a car with dimensions as permitted by the exception to Section 3003.4.7.
>
> ***2. [For DSA/AC]*** *For accessibility requirements for door size in public buildings, public accommodations, commercial buildings and publicly funded housing, see Chapter 11B, Section 1116B.1.4.*

3003.4.5 Door protective and reopening device. Doors closed by automatic means shall be provided with a door-reopening device that will function to stop and reopen a car door and adjacent hoistway door in case the car door is obstructed while closing. This reopening device shall also be capable of sensing an object or person in the path of a closing door without requiring contact for activation at a nominal 5 inches and 29 inches (127 mm and 737 mm) above the floor.

Door-reopening devices shall remain effective for a period of not less than 20 seconds.

[For DSA/AC] EXCEPTION: *For accessibility requirements for door protective and reopening device in accessible housing, see Chapter 11A, Section 1114A.1. For public buildings, public accommodations, commercial buildings, and publicly funded housing, se Chapter 11B, Section 1116B.1.5.*

3003.4.6 Door delay (passenger service time).

3003.4.6.1 Hall call. The minimum acceptable time from notification that a car is answering a call (lantern and audible signal) until the doors of that car start to close shall be as indicated in the following table:

DISTANCE, feet (mm)	TIME (seconds)
0 to 5 (0 to 1524)	4
10 (3048)	7
15 (4572)	10
20 (6096)	13

The distance shall be established from a point in the center of the corridor or lobby [maximum 5 feet (1524 mm)] directly opposite the farthest hall button to the center line of the hoistway entrance.

[For DSA/AC] EXCEPTION: *For accessibility for hall call in accessible housing, see Chapter 11A, Section 1110A.1.5. For public buildings, public accommodations, commercial buildings and publicly funded housing, see Chapter 11B, Section 1116B.1.6.*

3003.4.6.2 Car call. The minimum acceptable time for doors to remain fully open shall not be less than three seconds.

[For DSA/AC] EXCEPTION: *For accessibility requirements for car call in accessible housing, see Chapter 11A,Section 1110A.1.6. For public buildings, public accommodations, commercial buildings and publicly funded housing, see Chapter 11B, Section 1116B.1.7.*

3003.4.7 Car inside. The car inside shall allow for the turning of a wheelchair. The minimum clear distance between walls or between wall and door, excluding return panels, shall not be less than 68 inches by 54 inches (1727 mm by 1372 mm). Minimum distance from wall to return panel shall not be less than 51 inches (1295 mm).

EXCEPTION: When approved by the building official, elevators provided in schools, institutions or other buildings may have a minimum clear distance between walls or between wall and door, excluding return panels, of not less than 54 inches by 54 inches (1372mmby 1372 mm).Minimum distance from wall to return panel shall not be less than 51 inches (1295 mm).

[For DSA/AC] EXCEPTION: *For accessibility requirements for car inside in public buildings, public accommodations, commercial buildings and publicly funded housing, see Chapter 11B, Section 1116B.1.8.*

3003.4.8 Car controls. Controls shall be readily accessible from a wheelchair upon entering an elevator.

The center line of the alarm button and emergency stop switch shall be at a nominal 35 inches (889 mm), and the highest floor button no higher than 54 inches (1372 mm) from the floor. Floor registration buttons, exclusive of border, shall be a minimum 3/4 inch (19.1mm) in size, raised, flush or recessed. Visual indication shall be provided to show each call registered and extinguished when call is answered. Depth of flush or recessed buttons when operated shall not exceed 3/8 inch (9.5 mm).

Markings shall be adjacent to the controls on a contrasting color background to the left of the controls. Letters or numbers shall be a minimum of 5/8 inch (15.9 mm) high and raised or recessed 0.030 inch (0.8 mm).

Applied plates permanently attached shall be acceptable.

Emergency controls shall be grouped together at the bottom of the control panel.

Controls not essential to the automatic operation of the elevator may be located as convenient.

[For DSA/AC] EXCEPTION: *For accessibility requirements for car controls in accessible housing, see Chapter 11A, Section 1110A.1.8. For public buildings, public accommodations, commercial buildings and publicly funded housing, see Chapter 11B, Section 1116B.1.9.*

3003.4.9 Car position indicator and signal. A car position indicator shall be provided above the car operating panel or over the opening of each car to show the position of the car in the hoistway by illumination of the indication corresponding to the landing at which the car is stopped or passing.

Indications shall be on a contrasting color background and a minimum of 1/2 inch (12.7 mm) in height.

In addition, an audible signal shall sound to tell a passenger that the car is stopping or passing a floor served by the elevator.

A special button located with emergency controls may be provided. Operation of the button will activate an audible signal only for the desired trip.

> ***[For DSA/AC] EXCEPTION:*** *For accessibility requirements for car position indicator and signal in public buildings, public accommodations, commercial buildings and publicly funded housing, see Chapter 11B, Section 1116B.1.10.*

3003.4.12 Handrails. A handrail shall be provided on one wall of the car, preferably the rear. The rails shall be smooth and the inside surface at least 11/2 inches (38 mm) clear of the walls at a nominal height of 32 inches (813 mm) from the floor.

Nominal = ± 1 inch (25mm).

> **NOTE:** Thirty-two inches (813 mm) required to reduce interference with car controls where lowest button is centered at 35 inches (889 mm) above floor.

> ***[For DSA/AC] EXCEPTION:*** *For accessibility requirements for handrails in public buildings, public accommodations, commercial buildings and publicly funded housing, see Chapter 11B, Section 1116B.1.11.*

3003.4.13 Minimum illumination. The minimum illumination at the car controls and the landing when the car and landing doors are open shall not be less than 5 footcandles (54 lx).

> ***[For DSA/AC] EXCEPTION:*** *For accessibility requirements for minimum illumination at car controls in accessible housing, see Chapter 11A, Section 1110A.1.10. For public buildings, public accommodations, commercial buildings and publicly funded housing, see Chapter 11B, Section 1116B.1.12.*

3003.4.14 Hall buttons. The center line of the hall call buttons shall be a nominal 42 inches (1067 mm) above the floor.

Direction buttons, exclusive of border, shall be a minimum of 3/4 inch (19.1 mm) in size, raised, flush or recessed. Visual indication shall be provided to show each call registered and extinguished when the call is answered. Depth of flush or recessed button when operated shall not exceed 3/8 inch (9.5 mm).

> ***[For DSA/AC] EXCEPTION:*** *For accessibility requirements for hall call button center line in public buildings, public accommodations, commercial buildings and publicly funded housing, see Chapter11B, Section 1116B.1.13.*

3003.4.15 Hall lantern. A visual and audible signal shall be provided at each hoistway entrance indicating to the prospective passenger the car answering the call and its direction of travel.

The visual signal for each direction shall be a minimum of 21/2 inches (64 mm) in size and visible from the proximity of the hall call button.

The audible signal shall sound once for the up direction and twice for the down direction.

The center line of the fixture shall be located a minimum of 6 feet (1829 mm) from the floor.

The use of in-car lanterns conforming to the above and located in jamb shall be acceptable.

> ***[For DSA/AC] EXCEPTION:*** *For accessibility requirements for hall lantern in accessible housing, see Chapter 11A, Section 1110A.1.11. For public buildings, public accommodations, commercial buildings and publicly funded housing, see Chapter 11B, Section 1116B.1.14.*

3003.4.16 Doorjamb marking. The floor designation shall be provided at each hoistway entrance on both sides of jamb visible from within the car and the elevator lobby at a height of 60 inches (1524 mm) above the floor. Designations shall be on a contrasting background 2 inches (51 mm) high and raised 0.030 inch (0.8 mm).

Applied plates permanently attached shall be acceptable.

> ***[For DSA/AC] EXCEPTION:*** *For accessibility requirements for doorjamb marking in accessible housing, see Chapter 11A, Section 1110A.1.12. For public buildings, public accommodations, commercial buildings and publicly funded housing, see Chapter 11B, Section 1116B.1.15.*

3003.4.17 Location.

> ***[For DSA/AC] EXCEPTION:*** *For accessibility requirements for location of passenger elevators in accessible housing, see Chapter 11A, Section 1110A.1.13. For public buildings, public accommodations, commercial buildings and publicly funded housing, see Chapter 11B, Section 1116B.1.16.*

Chapter 31B [For DHS]
PUBLIC SWIMMING POOLS

SECTION 3113B – POOL DECKS

3113B.1 General. *A minimum continuous and unobstructed 4-foot-wide (1219 mm) slip-resistant nonabrasive deck area of concrete or like material shall be provided flush with the top of the pool shell wall extending completely around the pool and the deck area shall further extend 4 feet (1219 mm) on both sides and rear of any diving board or slide and their appurtenances. The deck width shall be measured from the poolside edge of the coping lip.*

EXCEPTIONS:

l. *A deck at least 4 feet (1219 mm) in width shall extend around 50 percent or more of the perimeter of a spa pool. For spa pools that have their walls extending above the ground or floor level, the deck area requirement shall apply at the ground or floor level unless otherwise specified by the enforcing agency.*

2. *The deck width separating a spa pool from an adjacent pool shall not be less than 6 feet (1829 mm) wide.*

3. *The deck may be omitted from around a temporary training pool.*

4. [For DSA/AC] *Any mechanism provided to assist persons with disabilities in gaining entry into the pool and in exiting from the pool. All mechanisms shall comply with 1104B.4.3. Refer to Section 1104B.4.3, Participation areas.*

Chapter 34
EXISTING STRUCTURES

Division I

SECTION 3401 – GENERAL

Buildings in existence at the time of the adoption of this code may have their existing use or occupancy continued, if such use or occupancy was legal at the time of the adoption of this code, provided such continued use is not dangerous to life.

Any change in the use or occupancy of any existing building or structure shall comply with the provisions of Sections 109 and 3405 of this code.

For existing buildings, see Appendix Chapter 34. See also Section 101.3.

For a comprehensive code and guidelines on the treatment of existing buildings, see the *Uniform Code for Building Conservation.*

[For DSA/AC] NOTE: *For accessibility requirements see Chapter 11B, Section 1134B.*

Division II – [For DSA/AC] STATE HISTORICAL BUILDING CODE

Note: *Division II is a reprint of Part 8, California Historical Building Code.*

Part 8 contains alternative regulations for qualified historical buildings.

The State Historical Building Code (SHBC) is unique among state regulations. The authoring of the original SHBC required state agencies promulgating regulations for building construction to work in harmony with representatives of other design and construction disciplines. The result was a totally new approach to building codes for historical structures, which maintains currently acceptable life-safety standards.

These regulations are also unique in that they are performance-oriented rather than prescriptive. The provisions of the SHBC are to be applied by the enforcing authority of every city, county, city and county, or state agency in permitting repairs, alterations and additions necessary for the preservation, rehabilitation, relocation, related construction, change of use or continued use of a qualified historical building.

The authority for use of the SHBC is vested in Sections 18950 through 18961 of the Health and Safety Code. Section 18954 states, .The building department of every city or county shall apply the provisions of alternative building standards and building regulations adopted by the SHBC Board pursuant to Section 18959.5 in permitting repairs, alterations and additions necessary for the preservation, restoration, rehabilitation, moving or continued use of an historical building or structure. A state agency shall apply the alternative building regulations adopted by the SHBC Board pursuant to Section 18959.5 in permitting repairs, alterations, and additions necessary for the preservation, restoration, rehabilitation, moving, or continued use of an historical building or structure.

However, be aware that in order to use the SHBC, the structure under consideration must be qualified by being designated as an historical building or structure. Section 18955 states: “For the purposes of this part, a qualified historical building or structure is any structure or collection of structures, and their associated sites deemed of importance to the history, architecture, or culture of an area by an appropriate local or state governmental jurisdiction. This shall include structures on existing or future national, state or local historical registers or official inventories, such as the National Register of Historic Places, State Historical Landmarks, State Points of Historical Interest, and city or county registers or inventories of historical or architecturally significant sites, places, historic districts, or landmarks.”

The regulations of the SHBC have the same authority as state law and are to be considered as such. Liability is the same as for prevailing law.

The intent of the SHBC is to save California’s architectural heritage by recognizing the unique construction problems inherent in historical buildings and by providing a code to deal with these problems.

Historical Preface

The background of the State Historical Building Code can be traced to December 1973, when the State Department of Parks and Recreation published the California History Plan, Volume I, in which Recommendation No. 11 was proposed by the then California Landmarks Advisory Committee (later to become The State Historical Resources Commission). This proposal expressed a need for a new building code to meet the intent of protecting the public health and safety but retaining “enough flexibility to allow restoration of a Historic feature while still retaining its Historic integrity.” Finding No. 11 of this History Plan supported this need by stating that “ . . . restoration . . . is frequently made difficult by unnecessarily rigid interpretation of building . . . codes.”

In March of 1974, the Landmarks Committee by resolution recommended that the Director of the State Department of Parks and Recreation and the State Architect initiate a study to develop this needed code. These two officials accepted this concept and jointly called a statewide meeting in Sacramento on May 14th of that year. Attending were representatives from both the public and private sectors, such as members of the building industry, design professions, local and state building officials, and others interested in this problem.

Out of this open conference a steering committee was formed to explore in depth the ways and means of implementing the new historical building code concept. This ad hoc committee was chaired by a representative from the California Council,

American Institute of Architects and composed of a comprehensive cross section of the professional organizations and government agencies concerned with design and code enforcement.

Meetings began late in 1974 and continued into early 1975. By April of that year, a legislative subcommittee of the ad hoc group drafted a sample bill for the proposed code and requested that it be carried by Senator James R. Mills, President Pro Tempore of the Senate. After further development and refinement, the enacting legislation to create the authority for the code and an advisory board to prepare regulations to implement it (SB 927, Mills) was supported by both the legislature and the public. It was signed by the governor in September 1975, and became effective January 1, 1976.

The members of the advisory board, which were required by law to include local and state building officials, individuals from the building industry and design professions as well as representatives from city and county governments, were appointed and held their first session in Sacramento, February 24, 1976. This Board's duties included the preparation of code regulations and the review of specific historic building cases, when officially requested by governing bodies.

Several of the Board's members were a part of the original adhoc steering committee and thus provided a continuity and smooth transition from the inception of the code's philosophy to its pragmatic implementation in these performance-oriented regulations.

The first comprehensive regulations were codified in August and October 1979, after years of careful deliberation. Those regulations allowed all jurisdictions to utilize them at their discretion
in replacing or modifying details of prevailing prescriptive codes.

These current performance regulations were adopted by the Board on June 23, 1998, and approved by the California Building Standards Commission on July 21, 1998.

Chapter 8-1
ADMINISTRATION

SECTION 8-101 – TITLE, PURPOSE AND INTENT

8-101.1 Title. These regulations shall be known as the State Historical Building Code and will be referred to herein as "the SHBC."

8-101.2 Purpose. The purpose of this code is to provide regulations for the preservation, restoration, rehabilitation, relocation or reconstruction of buildings or structures designated as qualified historical buildings or properties (as defined in Section 8-218). Such regulations are intended to provide alternative solutions for the preservation of qualified historical buildings or properties, to provide access for persons with disabilities, to provide a cost-effective approach to preservation, and to provide for the reasonable safety of the occupants or users. These regulations require enforcing agencies to accept reasonably equivalent alternatives to the regular code (as defined in Section 8-219) when dealing with qualified historical buildings or properties.

8-101.3 Intent. It is the intent of these regulations to facilitate the preservation and continuing use of qualified historical buildings or properties while providing reasonable safety for the building occupants and access for persons with disabilities.

SECTION 8-102 – APPLICATION

8-102.1 Application. These regulations are applicable for all issues regarding building code compliance for qualified historical buildings or properties. These regulations are to be used in conjunction with the regular code to provide alternatives to the regular code to facilitate the preservation of qualified historical buildings or properties. These regulations shall be used whenever compliance with the regular code is required for qualified historical buildings or properties.

8-102.1.1 Additions, alterations and repairs. It is the intent of these regulations to allow nonhistorical expansion or addition to a qualified historical building or property provided:

1. Nonhistorical additions shall conform to the requirements of the regular code. See Section 8-202.A.

2. Additions, alterations or repairs shall not cause a qualified historical building or structure to become unsafe or overloaded.

8-102.1.2 Relocation. Relocated qualified historical buildings or properties shall be sited to comply with the regular code or as provided for in this code. New nonhistorical construction related to relocation shall comply with the regular code. Historical reconstruction and restoration related to relocation may comply with the alternatives contained in this code.

8-102.1.3 Change of occupancy. [8-106] For change of use or occupancy, see Chapter 8-3, Use and Occupancy.

8-102.1.4 Continued use. Qualified historical buildings or properties may have their existing use or occupancy continued if such use or occupancy does not constitute a distinct hazard to life safety as defined in this code.

8-102.1.5 Unsafe buildings. [8-109] When a qualified historical building or property is determined to be unsafe as defined in the regular code, the requirements of this code are applicable to the work necessary to correct the unsafe conditions. Work to remedy the building shall be limited to the correction of the unsafe conditions, and it shall not be required to bring the entire building in compliance with regular code.

NOTE: See Section 8-703, Structural Survey, to determine when a structural survey is required.

SECTION 8-103 – ORGANIZATION AND ENFORCEMENT

8-103.1 Authority. The state or local enforcing agency, pursuant to authority provided under Section 18954 of the Health and Safety Code, shall apply the provisions of this code in permitting repairs, alterations and additions necessary for the preservation, restoration, reconstruction, rehabilitation, moving or continued use of a qualified historical building or property when so elected by the private property owner.

8-103.2 State Enforcement. All the state agencies per Section 18958 of the Health and Safety Code shall administer and enforce this code with respect to qualified historical buildings or properties under their respective jurisdiction.

8-103.3 Liability. [8-204] Prevailing law regarding immunity of building officials is unaffected by the use and enforcement of this code.

SECTION 8-104 – REVIEW AND APPEALS

8-104.1 State Historical Building Safety Board (SHBSB). In order to provide for interpretation of the provisions of this code and to hear appeals, the SHBSB shall act as a review body to state and local agencies or any affected party.

8-104.2 SHBSB Review. [8-1403] When a proposed design, material or method of construction is being considered by the enforcing agency, the agency chief, the building official or the local board of appeals may file a written request for opinion to the SHBSB for its consideration, advice or findings. In considering such request, the SHBSB may seek the advice of other appropriate private or public boards, individuals, or state or local agencies. The SHBSB shall, after considering all of the facts presented, including any recommendation of other appropriate boards, agencies or other parties, determine if, for the purpose intended, the proposal is reasonably equivalent to that allowed by these regulations in proposed design, material or method of construction, and it shall transmit such findings and its decision to the enforcing agency for its application. The Board shall recover the costs of such reviews and shall report the decision in printed form, copied to the California Building Standards Commission.

8-104.3 SHBC Appeals. [8-1404] If any local agency administering and enforcing this code or any person adversely affected by any regulation, rule, omission, interpretation, decision or practice of the agency enforcing this code wishes to appeal the issue for resolution to the SHBSB, either of these parties may appeal directly to the Board. The Board may accept the appeal only if it determines that issues involved are of statewide significance. The Board shall recover the costs of such reviews and shall make available copies of decisions in printed form at cost, copied to the California Building Standards Commission.

8-104.4 Costs for Board Action and Informational Material. An estimate of the review and appeals process can be provided by contacting:

Executive Director
The State Historical Building Safety Board

Cost information and availability of the codes, hearing information, informational and background material, and Board decisions are available from the same source.

8-104.5 Local Agency Fees. Local agencies, when actively involved in the appeal, may also charge affected persons reasonable fees not to exceed the cost of obtaining reviews and appeals from the Board.

SECTION 8-105 – CONSTRUCTION METHODS AND MATERIALS

8-105.1 Repairs. Repairs to any portion of a qualified historical building or property may be made in-kind with historic materials and the use of original or existing historic methods of construction, subject to conditions of this code. (See Chapter 8-8.)

8-105.2 Alternatives to the State Historical Building Code. It is the intent of this code to allow the use of these alternatives or any other acceptable regulation or methodology of design or construction in whole or in part, with the regular code, or in any combination of the regular code and this code. These regulations are not intended to preclude the use of any proposed alternative or method of design or construction not specifically prescribed or otherwise allowed by these regulations. Any other alternative may be submitted for evaluation to the appropriate enforcing agency for review and acceptance. The enforcing agency may request that sufficient evidence or proof be submitted to substantiate any claims that may be made regarding such alternatives. Any alternative offered in lieu of that prescribed or allowed in this code shall be reasonably equivalent in quality, strength, effectiveness, durability and safety to that of this code.

SECTION 8-106 – SHBSB RULINGS

8-106.1 General. Rulings of the SHBSB (i.e., formal appeals case decisions, code interpretations and administrative resolutions, etc.) that are issues of statewide application are required to be submitted to the California Building Standards Commission in printed form. The purpose of these rulings is to provide guidance for similar cases or issues.

> **NOTE:** The past appellate and interpretive rulings of the SHBSB are being compiled and catalogued and will be published as an appendix with the State Historical Building Code.

Chapter 8-2
DEFINITIONS

SECTION 8-201 – DEFINITIONS

For the purpose of this code, certain terms and phrases, words, and their derivatives shall be construed as specified in this chapter. Additional definitions and/or terms may appear in the various other chapters relative to terms or phrases primarily applicable thereto. Any reference to .authority having jurisdiction. does not necessarily preclude the appellate process of Section 8-104.3.

SECTION 8-202 – A

ADAPTIVE REUSE. The process of adapting a property, site, building, or structure for a use other than that for which it was originally designed or previously used.

ADDITION. A non-historical extension or increase in floor area or height of a building or structure.

ALTERATION. A modification to a building or structure that affects usability of the building or structure, or part thereof. Alterations include, but are not limited to, remodeling, renovation, rehabilitation, reconstruction, historic restoration, changes

or rearrangement of the structural parts or elements, and changes or rearrangements in the plan configuration of walls and full-height partitions.

ARCHITECTURAL SIGNIFICANCE. Importance of a historic property based on physical aspects of its design, materials, form, style or workmanship.

SECTION 8-203 – B

BUILDING. Any structure used or intended for supporting or sheltering any use or occupancy.

SECTION 8-204 – C

CHARACTER-DEFINING FEATURE. Those visual aspects and physical elements that comprise the appearance of a historic building, structure or property, and that are significant to its historic, architectural and cultural values, including the overall shape of the structure, building or property, its materials, craftsmanship, decorative details, interior spaces and features, as well as the various aspects of its site and environment.

CONSERVATION. The practice of prolonging the physical and aesthetic life of prehistoric and historic material culture through documentation, preventive care, treatment and research.

CULTURAL RESOURCE. Building, site, structure, object, or district evaluated as having significance in prehistory or history.

SECTION 8-205 – D

DISTINCT HAZARD. Any clear and evident condition that exists as an immediate danger to the safety of the occupants. Conditions that do not meet the requirements of current regular codes
and ordinances do not, of themselves, constitute a distinct hazard. Section 8-104.3, SHBC Appeals, remains applicable.

DISTRICT. A historic district possessing a significant concentration, linkage, or continuity of sites, buildings, structures, or objects, or combination thereof, united historically or aesthetically by plan or physical development.

SECTION 8-206 – E

No definitions.

SECTION 8-207 – F

FACILITIES. A building and such other structures, topography, or development that may be within the confining or legal limits of the qualified historic property, site, group of such sites, historic district or districts.

FIRE HAZARD. Any condition or act which increases, or may increase the hazard or menace of fire to a greater degree than customarily recognized by the authority having jurisdiction, or any condition or act which could obstruct, delay, hinder or interfere with the operations of firefighting personnel or the egress of occupants in the event of fire. Section 8-104.3, SHBC Appeals, remains applicable.

SECTION 8-208 – G

No definitions.

SECTION 8-209 – H

HISTORIC FABRIC OR MATERIALS. Original and later added significant construction materials, architectural finishes or elements in a particular pattern or configuration which form a historical property, as determined by the authority having jurisdiction.

HISTORICAL SIGNIFICANCE. Importance for which a property has been evaluated and found to be historic, as determined by the authority having jurisdiction.

SECTION 8-210 – I

IMMINENT THREAT. Any condition within or affecting a structure which, in the opinion of the authority having jurisdiction, would qualify a building or structure as dangerous to the extent that the life, health, property or safety of the public, its occupants or those performing necessary repair, stabilization or shoring work are in immediate peril due to conditions affecting the building or structure. Potential hazards to persons using, or improvements within, the right-of-way may not be construed to be imminent threats solely for that reason if the hazard can be mitigated by shoring, stabilization, barricades or temporary fences.

INTEGRITY. Authenticity of a property's historic identity, evidenced by the survival of physical characteristics that existed during the property's historic or prehistoric period.

SECTION 8-211 – J

No definitions.

SECTION 8-212 – K

No definitions.

SECTION 8-213 – L

LIFE-SAFETY EVALUATION. An evaluation of the life-safety hazards of a building or structure based on procedures similar to those contained in NFPA 909, Standard for the Protection of Cultural Resources, Appendix B, Fire Risk Assessment in Heritage Premises.

SECTION 8-214 -- M

No definitions.

SECTION 8-215 -- N

No definitions.

SECTION 8-216 -- O

OBJECT. Used to distinguish from buildings and structures those constructions or monuments that are primarily artistic in nature or are relatively small in scale and simply constructed. Although it may be, by nature or design, movable, an object is associated with a specific setting or environment.

SECTION 8-217 -- P

PERIOD OF SIGNIFICANCE. The length of time when a historic building, property or site was associated with important events, activities, or persons, or attained the characteristic which qualifies it for listing or registration.

PRESERVATION. The act or process of applying measures necessary to sustain the existing form, integrity, and materials of a historic property, building or structure. Work, including preliminary measures to protect and stabilize the property, generally focuses upon the ongoing maintenance and repair of historic materials and features rather than extensive replacement and new construction. New exterior additions are not within the scope of this treatment; however, the limited and

sensitive upgrading of mechanical, electrical, and plumbing systems and other code-related work to make properties functional is appropriate within a preservation project.

SECTION 8-218 – Q

QUALIFIEDHISTORICAL BUILDING OR PROPERTY. Any building, site, structure, object, district or collection of structures, and their associated sites, deemed of importance to the history, architecture or culture of an area by an appropriate local, state or federal governmental jurisdiction. This shall include designated buildings or properties on, or determined eligible for, official national, state or local historical registers or official inventories, such as the National Register of Historic Places, California Register of Historical Resources, State Historical Land-marks, State Points of Historical Interest, and officially adopted city or county registers, inventories, or surveys of historical or architecturally significant sites, places or landmarks.

SECTION 8-219 – R

RECONSTRUCTION. The act or process of depicting, by means of new construction, the form, features, and detailing of a nonsurviving site, landscape, building, structure or object for the purpose of replicating its appearance at a specific period of time.

REGULAR CODE. The adopted regulations that govern the design and construction or alteration of nonhistorical buildings, structures and properties within the jurisdiction of the enforcing agency.

REHABILITATION. The act or process of making possible a compatible use for a property, building or structure through repair, alterations and additions while preserving those portions or features which convey its historical, cultural, or architectural values.

RELOCATION. The act or process of moving any structure or a portion of a structure that may be moved to a new site, or a different location on the same site.

REPAIR. Renewal, reconstruction or renovation of any portion of an existing property, site or building for the purpose of its continued use.

RESTORATION. The act or process of accurately depicting the form, features and character of a property, building or structure as it appeared at a particular period of time by the means of the removal of features from other periods in its history and reconstruction of missing features from the restoration period. The limited and sensitive upgrading of mechanical, electrical and plumbing systems and other code-required work to make properties functional is appropriate within a restoration project.

SECTION 8-220 – S

STRUCTURE. That which is built or constructed, an edifice or a building of any kind, or any piece of work artificially built up or composed of parts joined together in some definite manner.

Chapter 8-3
USE AND OCCUPANCY

SECTION 8-301 – PURPOSE AND SCOPE

8-301.1 Purpose. The purpose of this chapter is to provide alternative regulations for the determination of occupancy classifications and conditions of use for buildings or structures designated as qualified historical buildings or properties.

8-301.2 Scope. Every qualified historical building or property for which a building permit has been requested shall be classified prior to permit issuance according to its use or the character of its occupancy in accordance with the regular code and applicable provisions of this chapter.

SECTION 8-302 – GENERAL

8-302.1 Existing Use. The use or character of occupancy of a qualified historical building or property, or portion thereof, shall be permitted to continue in use regardless of any period of time in which it may have remained unoccupied or in other uses, provided such building or property otherwise conforms to all applicable requirements of this chapter.

8-302.2 Change in Occupancy. The use or character of the occupancy of a historical building may be changed from its historic use or character provided the building conforms to the requirements applicable to the new use or character of occupancy as set forth in this code. Such change in occupancy shall not mandate conformance with new construction requirements as set forth in prevailing regular code, provided the new use or occupancy does not create a fire hazard or other condition detrimental to the safety of occupants or of firefighting personnel.

8-302.3 Occupancy Separations. Required occupancy separations of more than one hour may be reduced to one-hour fire-resistive construction with all openings protected by not less than three-fourths-hour fire-resistive assemblies of the self-closing or automatic-closing type when the building is provided with an approved automatic sprinkler system throughout the entire building in accordance with prevailing code. Doors equipped with automatic-closing devices shall be of a type which will function upon activation of a device which responds to products of combustion other than heat.

Required occupancy separations of one hour may be omitted when the building is provided with an approved automatic sprinkler system throughout.

8-302.4 Maximum Floor Area. Regardless of the use or character of occupancy, the area of a one-story historical building may have, but shall not exceed, a floor area of 15,000 square feet (1393.5 m2) unless such increase is otherwise permitted in prevailing code. Multistory buildings (including basements and cellars) shall be in accordance with regular code requirements.

> **EXCEPTION:** Historic buildings provided with an approved automatic sprinkler system may be unlimited in floor area without fire-resistive area separation walls.

8-302.5 Maximum Height. The maximum height and number of stories of a historical building shall not be limited because of construction type, provided such height or number of stories does not exceed that of its designated historical design.

8-302.6 Fire-resistive Construction. See Chapter 8-4.

8-302.7 Light and Ventilation. Existing provisions for light and ventilation which do not, in the opinion of the enforcing agency, constitute a safety hazard may remain. See Section 8-303.6 for residential requirements. See Section 8-503, Escape or Rescue Windows and Doors.

SECTION 8-303 – RESIDENTIAL OCCUPANCIES

8-303.1 Purpose. The purpose of this section is to provide alternative regulations for those buildings or structures designated as qualified historical buildings or properties and classified as residential occupancies. These regulations require enforcing

agencies to accept any reasonably equivalent alternatives to the regular code when dealing with qualified historical buildings and properties.

8-303.2 Intent. It is the intent of these regulations to preserve the integrity of qualified historical buildings and properties while maintaining a reasonable degree of protection of life, health and safety for the occupants.

8-303.3 Application and Scope. The provisions of this section shall apply to all qualified historical buildings used for human habitation. Those dwelling units intended only for display, or public use with no dwelling use involved, need not comply with the requirements of this section.

8-303.4 Alternative Exit Definitions.

8-303.4.1 Exit ladder device. An exit ladder device is a permanently installed, fixed, folding, retractable, or hinged ladder intended as a means of emergency egress from areas of the second or third stories. Unless approved specifically for a longer length, the use shall be limited to 25 feet (7620 mm) in length. Exit ladders are permitted in areas serving an occupant load of less than 10 persons.

8-303.4.2 Fire escapes. See Chapter 8-5.

8-303.5 Room Dimensions. Rooms used for sleeping purposes may contain a minimum of 50 square feet (4.6 m2) floor area provided there is maintained an average ceiling height of 7 feet (2134 mm). Other habitable rooms need only be of adequate size to be functional for the purpose intended.

8-303.6 Light and Ventilation. Windows in habitable rooms shall have an area of 6 percent of the floor area, or 6 square feet (0.56 m2), whichever is greater. Windows in sleeping rooms shall be openable (see Section 8-503). Dwelling occupancies need not be provided with electrical lighting.

8-303.7 Alteration and Repair. The alteration and repair of historical buildings may permit the replacement, retention and extension of original materials and the continued use of original methods of construction provided a life-safety hazard is not created or continued in existence.

The amount of alterations and repairs is not limited provided there is no nonhistorical increase in floor area, volume or size of the structure.

8-303.8 Exiting. See Chapter 8-5.

Chapter 8-4
FIRE PROTECTION

SECTION 8-401 – PURPOSE, INTENT AND SCOPE

8-401.1 Purpose. The purpose of this chapter is to provide alternative regulations for fire protection of buildings or structures designated as qualified historical buildings or properties. These regulations require enforcing agencies to accept any reasonably equivalent alternatives to the regular code when dealing with qualified historical buildings or properties.

8-401.2 Intent. The intent of these regulations is to preserve the integrity of qualified historical buildings and properties while maintaining a reasonable degree of fire protection based primarily on the life safety of the occupants and firefighting personnel.

8-401.3 Scope. This chapter shall apply when required by the provisions of Section 8-102.

SECTION 8-402 – FIRE-RESISTIVE CONSTRUCTION

8-402.1 Exterior Wall Construction. The fire-resistance requirement for existing exterior walls and existing opening protection may be satisfied when an automatic fire-extinguishing system designed for exposure protection is installed. The automatic sprinklers may be installed on the exterior under the roof line with at least one sprinkler head located over each opening required to be protected. Additional sprinkler heads shall also be distributed along combustible walls that do not meet the fire-resistive requirement due to their relationship to property lines as required by regular code. Such sprinkler system may be connected to an adequate domestic water supply on the street-main side of the building shut-off valve. A shut-off valve may be installed for the sprinkler system provided it is locked in an open position.

8-402.2 One-hour Construction. Upgrading an existing qualified historic building or property to one-hour fire-resistive construction and one-hour fire-resistive corridors shall not be required regardless of construction or occupancy when one of the following is provided:

1. An automatic fire sprinkler system throughout.

2. An approved life-safety evaluation.

3. Other alternative measures are approved by the enforcing agency.

8-402.3 Glazing in Fire-rated Systems. Historic glazing materials in interior walls required to have one-hour fire rating may be approved subject to the concurrence of the enforcing agency when provided with approved smoke seals and when the area affected is provided with an automatic sprinkler system.

SECTION 8-403 – INTERIOR FINISH MATERIALS

New nonhistoric interior wall and ceiling finish shall conform to the provisions of the regular code. Existing nonconforming materials used in interior wall and finishes may be surfaced with an approved fire retardant to increase the rating of the natural finish to within reasonable proximity of the required rating. For wood lath and plaster walls, see Section 8-404.

> **EXCEPTION:** When an approved automatic sprinkler system is provided throughout the building, existing finishes need not be fire retardant.

SECTION 8-404 – WOOD LATH AND PLASTER

Wood lath and plaster walls may be considered in accordance with codes, standards, and listings published prior to 1943 whereby a wood stud wall assembly with gypsum or lime plaster on hand split or sawn wooden lath obtains a one-half-hour fire-resistive rating. This rating may be increased for interior walls to as much as one hour by filling the wall with mineral fiber or glass fiber.

SECTION 8-405 – OCCUPANCY SEPARATION

See Chapter 8-3.

SECTION 8-406 – MAXIMUM FLOOR AREA

See Chapter 8-3.

SECTION 8-407 – VERTICAL SHAFTS

Vertical shafts need not be enclosed when such shafts are blocked at every floor level by the installation of not less than 2 full inches (51 mm) of solid wood or equivalent construction installed as to prevent the initial passage of smoke and flame. Approved automatic sprinkler systems or other solutions may be considered on a case-by-case basis, in lieu of enclosure of vertical shafts and stairwells.

SECTION 8-408 – ROOF COVERING

Existing or original roofing materials may be repaired or reconstructed subject to the following requirements:

1. The original or historic roofing system shall be detailed or modified as necessary in order to be capable of providing shelter to the building occupants and exclude dampness, while preserving the historic materials and appearance of the roof.

2. Wooden roof materials may be utilized where fire resistance is required provided they are treated with fire-retardant treatments to achieve an equivalence to a Class C fire-resistive rating, or as otherwise permitted on a case-by-case basis.

SECTION 8-409 – FIRE ALARM SYSTEMS

Every qualified historical building or property shall be provided with fire alarm systems as required for the use or occupancy by the regular code or other approved alternative.

SECTION 8-410 – AUTOMATIC FIRE-EXTINGUISHING SYSTEMS

8-410.1 Every historical building which cannot be made to conform to the construction requirements specified in the regular code for the occupancy or use, and which constitutes a distinct fire hazard (for definition of "distinct hazard," see Section 8-205), shall be deemed to be in compliance if provided with an approved automatic fire-extinguishing system.

EXCEPTION: When an alternative life-safety system is approved by the enforcing agency.

8-410.2 An automatic fire-extinguishing system shall not be used to substitute for or act as an alternative to the required number of exits from any facility. (See Chapter 8-5 for exiting requirements.)

8-410.3 An automatic fire-extinguishing system shall be provided in all detention facilities.

Chapter 8-5
MEANS OF EGRESS

SECTION 8-501 – PURPOSE, INTENT AND SCOPE

8-501.1 Purpose. The purpose of this chapter is to establish minimum means of egress regulations for qualified historical buildings or properties. These regulations require enforcing agencies to accept reasonably equivalent alternatives to the means of egress requirements in the regular code.

8-501.2 Intent. It is the intent of these regulations to provide an adequate means of egress.

8-501.3 Scope. Every qualified historical building or portion thereof shall be provided with exits as required by this chapter when required by the provisions of Section 8-102.

SECTION 8-502 – GENERAL

8-502.1 General. Except as provided in this section, exits shall conform or be made to conform to the provisions of the regular code.

EXCEPTIONS:

1. New fire escapes and fire escape ladders which comply with Section 8-502.2 shall be acceptable as one of the of egress required means of egress.

2. Existing previously approved fire escapes and fire escape ladders shall be acceptable as one of the required means provided they extend to the ground and are easily negotiated, adequately signed, and in good working order. Access shall be by an opening having a minimum width and height of 29 inches (737 mm) when open. No sill shall be more than 30 inches (762 mm) above the adjacent floor, landing or approved step.

3. The enforcing agency shall grant reasonable exceptions to specific provisions covered under applicable regulations where such exceptions will not adversely affect the life safety intended. (Examples: Existing door openings and corridor and stairway widths of less than the specified dimensions may be permitted, provided there is sufficient width and height for a person to pass through the opening or traverse the exit; existing stairways having risers and treads at variance with the specified rise and run for the occupant load and use are allowed.)

4. Upon specific case approval, the front or main exit door(s) need not be rehung to swing in the direction of exit travel provided other means or conditions of exiting, as necessary to serve the total occupant load served, are otherwise provided.

5. In lieu of total conformance with existing exiting requirements, the enforcing agency may accept any other condition which will allow or provide for the ability to quickly and safely evacuate any portion of a building without undue exposure and which will meet the intended exiting and life safety stipulated by these regulations.

8-502.2 Fire Escapes and Fire Escape Ladders. New fire escapes and new fire escape ladders shall comply with the following:

1. Access from a corridor shall not be through an intervening room.

2. All openings within 10 feet (3048 mm) shall be protected by three-fourths-hour fire assemblies. When located within a recess or vestibule, adjacent enclosure walls shall be of not less than one-hour fire-resistive construction.

3. Egress from the building shall be by a clear opening having a minimum dimension of not less than 29 inches (737 mm). Such openings shall be openable from the inside without the use of a key or special knowledge or effort. The sill of an opening giving access shall not be more than 30 inches (762 mm) above the floor, step or landing of the building or balcony.

4. Fire escape stairways and balconies shall support the dead load plus a live load of not less than 100 pounds per square foot (4.79 kN/m2) and shall be provided with a top and intermediate handrail on each side. The pitch of the stairway shall not exceed 72 degrees with a minimum width of 18 inches (457 mm). Treads shall not be less than 4 inches (102 mm) in width and the rise between treads shall not exceed 10 inches (254 mm). All stair and balcony railings shall support a horizontal force of not less than 50 pounds per lineal foot (729.5 N/m) of railing.

5. Balconies shall not be less than 44 inches (1118 mm) in width with no floor opening other than the stairway opening greater than 5/8 inch (15.9 mm) in width. Stairway openings in such balconies shall not be less than 22 inches by 44 inches (559 by 1118 mm). The balustrade of each balcony shall not be less than 36 inches (914 mm) high with not more than 9 inches (287 mm) between balusters.

6. Fire escapes shall extend to the roof or provide an approved gooseneck ladder between the top floor landing and the roof when serving buildings four or more stories in height having roofs with less than 4 units vertical in 12 units horizontal (33.3% slope). Fire escape ladders shall be designed and connected to the building to withstand a horizontal force of 100 pounds (445 N) placed anywhere on the rung. All ladders shall be at least 15 inches (381 mm) wide, located within 12 inches (305 mm) of the building. Ladder rungs shall be 3/4 inch (19.1 mm) in diameter and shall be located 12 inches (305 mm) on center. Openings for roof access ladders through cornices and similar projections shall have minimum dimensions of 30 inches by 33 inches (762 by 838 mm).
The length of fire escapes and exit ladder devices shall be limited to that approved by the building official based on products listed by a recognized testing laboratory.

7. The lowest balcony shall not be more than 18 feet (5486mm) from the ground. Fire escapes shall extend to the ground or be provided with counterbalanced stairs reaching to the ground.

8. Fire escapes shall not take the place of stairways required by the codes under which the building was constructed.

9. Fire escapes shall be kept clear and unobstructed at all times and maintained in good working order.

SECTION 8-503 – ESCAPE OR RESCUE WINDOWS AND DOORS

Basements in dwelling units and every sleeping room below the fourth floor shall have at least one openable window or door approved for emergency escape which shall open directly into a public street, alley, yard or exit court. Escape or rescue windows or doors shall have a minimum clear area of 3.3 square feet (0.31m2) and a minimum width or height dimension of 18 inches (457 mm) and be operable from the inside to provide a full, clear opening without the use of special tools.

EXCEPTION: Escape or rescue windows in Group R-1 Hotel occupancies may comply with the regular code.

Chapter 8-6
ALTERNATIVE ACCESSIBILITY PROVISIONS

SECTION 8-601 – PURPOSE, INTENT AND SCOPE

8-601.1 Purpose. The purpose of this chapter is to provide alternative regulations to facilitate access and use by persons with disabilities to and throughout buildings or structures designated as qualified historical buildings or properties. These regulations require enforcing agencies to accept any reasonably equivalent alternatives to regular code when dealing with qualified historical buildings or properties.

8-601.2 Intent. It is the intent of this chapter to preserve the integrity of qualified historical buildings and properties while providing access to and use by persons with disabilities.

8-601.3 Scope. These regulations shall apply to every qualified historical building or property that is required to provide access to persons with disabilities.

SECTION 8-602 – BASIC PROVISIONS

8-602.1 Regular Code. The regular code for access for persons with disabilities shall be applied to qualified historical buildings or properties unless strict compliance with the regular code will threaten or destroy the historical significance or character-defining features of the building or property.

8-602.2 Alternative Provisions. If the historical significance or character-defining features are threatened, alternative provisions for access may be applied pursuant to this chapter provided the following conditions are met:

1. Such alternative provisions shall be applied only on an item-by-item or a case-by-case basis. (See, e.g., Section 8-603.)

2. The alternative provisions are applied according to the priorities outlined in Section 8-603 whereby the alternative providing the greatest accessibility is listed first.

3. Documentation is provided stating the reasons for the application of the alternative provisions. Such documentation shall be maintained as a part of the public record.

4. If it is found that the application of the preferred alternatives listed in Section 8-603 threaten the historical significance or character defining features, the provisions of Sections 8-604 and 8-605 may be applied.

SECTION 8-603 – PREFERRED ALTERNATIVES

The alternatives below each category are listed in order of priority. These alternatives apply only to the specific building standards listed below.

8-603.1 Entry. These alternatives do not allow exceptions for the requirement of level landings in front of doors, except as provided in Section 8-603.3. Alternatives listed in order of priority are:

1. Access to any entrance used by the general public and no further than 200 feet (60 960 mm) from the primary entrance.

2. Access at any entrance not used by the general public but open and unlocked with directional signs at the primary entrance and as close as possible to, but no further than 200 feet (60 960 mm) from, the primary entrance.

8-603.2 Doors. Alternatives listed in order of priority are:

1. Single-leaf door which provides a minimum 30 inches (762 mm) of clear opening.

2. Single-leaf door which provides a minimum 291/2 inches (749 mm) clear opening

3. Double door, one leaf of which provides a minimum 291/2 inches (749 mm) clear opening.

4. Double doors operable with a power-assist device to provide a minimum 291/2 inches (749 mm) clear opening when both doors are in the open position.

8-603.3 Power-assisted Doors. A power-assisted door or doors may be considered an equivalent alternative to level landings, strikeside clearance and door-opening forces required by the regular code.

8-603.4 Toilet Rooms. In lieu of separate-gender toilet facilities as required in the regular code, an accessible unisex toilet facility may be designated.

8-603.5 Exterior and Interior Ramps and Lifts. Alternatives listed in order of priority are:

1. A lift or a ramp of greater than standard slope but no greater than 1:10, for horizontal distances not to exceed 12 feet (3658 mm). Signs shall be posted at upper and lower levels to indicate steepness of the slope.

2. Access by ramps of 1:6 slope for horizontal distance not to exceed 13 inches (330 mm). Signs shall be posted at upper and lower levels to indicate steepness of the slope.

3. Access provided by experiences, services, functions, materials and resources through methods, including, but not limited to, maps, plans, videos, virtual reality, and related equipment, at accessible levels. This alternative shall be documented as required in Section 8-605.

SECTION 8-604 – EQUIVALENT FACILITATION

Use of other designs and technologies, or deviation from particular technical and scoping requirements, are permitted if the application of the alternative provisions contained in Section 8-603 would threaten or destroy the historical significance or character-defining features of the building or site or cause unreasonable hardship.

Alternatives to Section 8-604 are permitted only where the following conditions are met:

1. Such alternatives shall be applied only on an item-by-item or a case-by-case basis.
2. The alternative design and/or technologies used will provide substantially equivalent or greater accessibility to, and usability of, the facility.

3. The official charged with the enforcement of the standards shall document the reasons for the application of the alternative design and/or technologies and their effect on the historical significance or character-defining features. Such documentation shall be in accordance with Section 8-602.2, Item 3, and shall include the opinions and comments of state or local accessibility officials and the opinions and comments of representative local groups of people with disabilities. Such documentation shall be recorded and entered into the permanent file of the enforcing agency.

SECTION 8-605 – EXCEPTIONS

If the historical significance or character-defining features would be threatened or destroyed by the application of alternative access standards as provided by this chapter, and no equivalent facilitation as provided in Section 8-604 is feasible, an exception from the literal requirements for full and equal access or any alternative provisions may be provided only if the following conditions are met:

1. Such exception is considered only on an item-by-item or a case-by-case basis.

2. Interpretive exhibits and/or equal services of the exempted significant historical aspects are provided for the public in a location fully accessible to and usable by persons with disabilities, including persons with hearing and sight impairment.

3. Services are provided in an accessible location equal to those provided in the excepted location.

4. The official charged with enforcement of the standards shall document the reasons for the application of the alternative design and/or technologies and their effect on the historical significance or character-defining features. Such documentation shall be in accordance with Section 8-602.2, Item 3, and shall include the opinions and comments of state or local accessibility officials, and the opinions and comments of representative local groups of people with disabilities. Such documentation shall be recorded and entered into the permanent file of the enforcing agency.

Chapter 8-7
ALTERNATIVE STRUCTURAL REGULATIONS

SECTION 8-701 – PURPOSE, INTENT AND SCOPE

8-701.1 Purpose. The purpose of this chapter is to provide alternative regulations for the structural safety of buildings or structures designated as qualified historical buildings or properties. These regulations require enforcing agencies to accept any reasonably equivalent alternatives to the regular code when dealing with qualified historical buildings or properties.

8-701.2 Intent. It is the intent of these regulations to encourage the preservation of qualified historical buildings while providing a reasonable level of structural safety for occupants and the public at large through the application of this code for such historical structures.

8-701.3 Scope. The alternative structural regulations provided by Section 8-705 are to be applied in conjunction with the regular code whenever a structural upgrade or reconstruction is undertaken for qualified historical buildings or properties.

SECTION 8-702 – GENERAL

8-702.1 These regulations shall not be construed to allow the enforcing agency to approve or permit a lower level of safety of structural design and construction than that which is reasonably equivalent to the regular code provisions in occupancies which are critical to the safety and welfare of the public at large, including, but not limited to, public and private schools, hospitals, municipal police and fire stations and essential services facilities.

8-702.2 Nothing in these regulations shall prevent voluntary and partial seismic upgrades when it is demonstrated that such up-grades will improve life safety and when a full upgrade would not otherwise be required.

SECTION 8-703 – STRUCTURAL SURVEY

8-703.1 Every structure or portion of a structure to be evaluated for structural capacity under this code shall be surveyed for structural conditions by an architect or engineer knowledgeable in historical structures. The survey shall document deterioration or signs of distress. The survey shall determine the details of the structural framing and the system for resistance of gravity and lateral loads. Details, reinforcement and anchorage of structural systems and veneers shall be determined and documented.

8-703.2 The results of the survey shall be utilized for designing modifications to the structural system to reach compliance with this code.

SECTION 8-704 – NONHISTORICAL ADDITIONS AND NONHISTORICAL ALTERATIONS

New nonhistorical additions and nonhistorical alterations which are structurally separated from an existing historical structure shall comply with regular code requirements.

New nonhistorical additions which impose vertical or lateral loads on an existing structure shall not be permitted unless the affected part of the supporting structure is evaluated and strengthened, if necessary, to meet regular code requirements.

NOTE: For use of archaic materials, see Chapter 8-8.

SECTION 8-705 – STRUCTURAL REGULATIONS

8-705.1 Gravity Loads. The capacity of the structure to resist gravity loads shall be evaluated and the structure strengthened as necessary. The evaluation shall include all parts of the load path. Where no distress is evident, and a complete load path is present, the structure may be assumed adequate by having withstood the test of time if anticipated dead and live loads will not exceed those historically present.

8-705.2 Wind and Seismic Loads. The ability of the structure to resist wind and seismic loads shall be evaluated. The evaluation shall be based on the requirements of Section 8-706.

Any unsafe conditions in the lateral-load-resisting system shall be corrected, or alternative resistance shall be provided. Additional resistance shall be provided to meet the minimum requirements of this code.

The architect or engineer shall consider additional measures with minimal loss of, and impact to, historic materials which will reduce damage and needed repairs in future earthquakes to better preserve the historical structure in perpetuity. These additional measures shall be presented to the owner for consideration as part of the rehabilitation or restoration.

SECTION 8-706 – LATERAL LOAD REGULATIONS

8-706.1 Lateral Loads. The forces used to evaluate the structure for resistance to wind and seismic loads need not exceed 0.75 times the seismic forces prescribed by the 1995 edition of the California Building Code (CBC). The seismic forces may be computed based on the Rw values tabulated in the CBC for similar lateral-force-resisting systems. All deviations of the detailing provisions of the lateral-force-resisting systems shall be evaluated for stability and the ability to maintain load-carrying capacity at increased lateral loads. Unreinforced masonry bearing wall buildings shall comply with Appendix Chapter 1 of the Uniform Code for Building Conservationt (UCBC), 1994 edition, and as modified by this code. Reasonably equivalent standards may be used on a case-by-case basis when approved by the authority having jurisdiction.
8-706.2 Existing Building Performance. The seismic resistance may be based upon the ultimate capacity of the structure to perform giving due consideration to ductility and reserve strength of the lateral-force-resisting system and materials while

maintaining a reasonable factor of safety. Broad judgment may be exercised regarding the strength and performance of materials not recognized by regular code requirements. (See Chapter 8-8, Archaic Materials and Methods of Construction.)

8-706.2.1 All structural materials or members that do not comply with detailing and proportioning requirements of the regular code shall be evaluated for potential seismic performance and the consequence of noncompliance. All members which might fail and lead to possible collapse, or threaten life safety, shall be judged unacceptable and appropriate structural strengthening shall be developed.

8-706.3 Load Path. A complete and continuous load path, including connections, from every part or portion of the structure to the ground shall be provided for the required forces. It shall be verified that the structure is adequately tied together to perform as a unit when subjected to earthquake forces.

8-706.4 Parapets. Parapets and exterior decoration shall be investigated for conformance to the regular code requirements for anchorage and ability to resist prescribed seismic forces. An exception to regular code requirements shall be permitted for those parapets and decorations which are judged not to be a hazard to life safety.

8-706.5 Historical Records. Past historical records of the structure or similar structures may be used in the evaluation, including the effects of subsequent alterations.

8-706.6 Nonstructural Features. Nonstructural features of a historic structure, such as exterior veneer, cornices and decorations, which might fall and create a life-safety hazard in an earthquake, shall be investigated. Their ability to resist seismic forces shall be verified, or the feature shall be strengthened.

8-706.6.1 Partitions and ceilings of corridors and stairways serving an occupant load of 30 or more shall be investigated to determine their ability to remain in place when the building is subjected to earthquake forces.

Chapter 8-8
ARCHAIC MATERIALS AND METHODS OF CONSTRUCTION

SECTION 8-801 – PURPOSE, INTENT AND SCOPE

8-801.1 Purpose. The purpose of this chapter is to provide regulations for the use of historical methods and materials of construction that are at variance with regular code requirements or are not otherwise codified, in buildings or structures designated as qualified historical buildings or properties. These regulations require enforcing agencies to accept any reasonably equivalent alternatives to the regular code when dealing with qualified historical buildings or properties.

8-801.2 Intent. It is the intent of these regulations to provide for the use of historical methods and materials of construction that are at variance with specific code requirements or are not otherwise codified.

8-801.3 Scope. Any construction type or material that is, or was, part of the historic fabric of a structure is covered by this chapter. Archaic materials and methods of construction present in a historic structure may remain or be reinstalled or be installed with new materials of the same class to match existing conditions.

SECTION 8-802 – GENERAL ENGINEERING APPROACH

Allowable stresses or ultimate strengths for archaic materials shall be assigned based upon similar conventional codified materials, or on tests as hereinafter indicated. The archaic materials and methods of construction shall be thoroughly investigated for their details of construction in accordance with Section 8-703. Testing shall be performed when applicable to evaluate existing conditions. The architect or structural engineer in responsible charge of the project shall assign allowable stresses or ultimate strength values to archaic materials. Such assigned allowable stresses, or ultimate strength values, shall not be greater than those provided for in the following sections without adequate testing, and shall be subject to the concurrence of the enforcing agency.

SECTION 8-803 – NONSTRUCTURAL ARCHAIC MATERIALS

Where nonstructural historic materials exist in uses which do not meet the requirements of the regular code, their continued use is allowed by this code, provided that any public health and life-safety hazards are mitigated subject to the concurrence of the enforcing agency.

SECTION 8-804 – ALLOWABLE CONDITIONS FOR SPECIFIC MATERIALS

Archaic materials which exist and are to remain in historic structures shall be evaluated for their condition and for loads required by this code. The structural survey required in Section 8-703 of this code shall document existing conditions, reinforcement, anchorage, deterioration and other factors pertinent to establishing allowable stresses and adequacy of the archaic materials. The remaining portion of this chapter provides additional specific requirements for commonly encountered archaic materials.

SECTION 8-805 – MASONRY

For adobe, see Section 8-806.

8-805.1 Existing Solid Masonry. Existing solid masonry walls of any type, except adobe, may be allowed, without testing, a maximum value of 3 pounds per square inch (20.7 kPa) in shear where there is a qualifying statement by the architect or engineer that an inspection has been made, that mortar joints are filled and that both brick and mortar are reasonably good. The allowable shear stress above applies to unreinforced masonry, except adobe, where the maximum ratio of unsupported height or length to thickness does not exceed 12, and where minimum quality mortar is used or exists. Wall height or length is measured to supporting or resisting elements that are at least twice as stiff as the tributary wall. Stiffness is based on the gross section. Allowable shear stress may be increased by the addition of 10 percent of the axial direct stress due to the weight of the wall directly above. Higher-quality mortar may provide a greater shear value and shall be tested in accordance with UBC Standard 21-6 as referenced in the 1997 UBC.

8-805.2 Stone Masonry.

8-805.2.1 Solid-backed stone masonry. Stone masonry solidly backed with brick masonry shall be treated as solid brick masonry as described in Section 8-805.1 and in the UCBC, provided representative testing and inspection verifies solid collar joints between stone and brick and that a reasonable number of stones lap with the brick wythes as headers or that steel anchors are present. Solid stone masonry where the wythes of stone effectively overlap to provide the equivalent header courses may also be treated as solid brick masonry.

8-805.2.2 Independent wythe stone masonry. Stone masonry with independent face wythes may be treated as solid brick masonry as described in Section 8-805.1 and the UCBC, provided representative testing and inspection verify that the core is essentially solid in the masonry wall and that steel ties are epoxied in drilled holes between outer stone wythes at floors, roof and at not to exceed 4 feet (1219 mm) on center in each direction, between floors and roof.

8-805.2.3 Testing of stone masonry. Testing of stone masonry shall be similar to UBC Standard 21-6, as referenced in the 1997 UBC, except that representative stones which are not interlocked shall be pulled outward from the wall and shear area appropriately calculated after the test.

8-805.3 Reconstructed Walls. Totally reconstructed walls utilizing original brick or masonry, constructed similar to original, shall be constructed in accordance with the regular code. Repairs or infills may be constructed in a similar manner to the original walls without conforming to the regular code.

SECTION 8-806 – ADOBE

8-806.1 General. Unburned clay masonry may be constructed, reconstructed, stabilized or rehabilitated subject to this chapter. Alternative approaches which provide an equivalent or greater level of safety may be used, subject to the concurrence of the enforcing agency.

8-806.2 Protection. Provisions shall be made to protect adobe structures from moisture and deterioration. The unreinforced adobe shall be maintained in reasonably good condition. Particular attention shall be given to moisture content of adobe walls. Unmaintained or unstabilized walls or ruins shall be evaluated for safety based on their condition and stability. Additional safety measures may be required subject to the concurrence of the enforcing agency.

8-806.3 Requirements. Unreinforced new or existing adobe walls shall meet the following requirements. Where existing dimensions do not meet these conditions, additional strengthening measures may be required.

1. One-story adobe load-bearing walls shall not exceed a height-to-thickness ratio of 6.

2. Two-story adobe structures. height-to-thickness wall ratio shall not exceed 5 at the ground floor and 6 at the second floor, and shall be measured at floor-to-floor height when the second floor and attic ceiling/roof are connected to the wall as described below.

3. Nonload-bearing adobe partitions and gable end walls shall be evaluated for stability and anchored against out-of-plane failure.

4. A bond beam of reinforced concrete or an equivalent design of other materials shall be provided at the top of all adobe walls, and for two-story structures, at the second floor. The size and configuration of the bond beam shall be designed in each case to meet the requirements of the existing conditions and provide an effective brace for the wall.

5. Anchorage of the bond beam of the equivalent design of other materials to the adobe walls shall be provided with anchors or suitable design compatible with the adobe material.

8-806.4 Repair or Reconstruction. Repair or reconstruction of wall area may utilize unstabilized brick or adobe masonry designed to be compatible with the constituents of the existing adobe materials.

8-806.5 Shear Values. Existing adobe may be allowed a maximum value of 4 pounds per square inch (27.6 kPa) for shear, with no increase for lateral forces.

8-806.6 Mortar. Mortar may be of the same soil composition as that used in the existing wall, or in new walls as necessary to be compatible with the adobe brick.

SECTION 8-807 – WOOD

8-807.1 Existing Wood Diaphragms or Walls. Existing wood diaphragms or walls of straight or diagonal sheathing shall be assigned shear resistance values appropriate with the fasteners and materials functioning in conjunction with the sheathing. The structural survey shall determine fastener details and spacings and verify a load path through floor construction. Shear values of Tables 8-8-A and 8-8-B may be used.

8-807.2 Wood Lath and Plaster. Wood lath and plaster walls and ceilings may be utilized using the shear values referenced in Section 8-807.1.

8-807.3 Existing Wood Framing. Existing wood framing members may be assigned allowable stresses consistent with codes in effect at the time of construction. Existing or new replacement wood framing may be of archaic types originally used if properly researched, such as balloon and single wall. Wood joints such as dovetail and mortise and tenon types may be used structurally, provided they are well made. Lumber selected for use and type need not bear grade marks, and greater or lesser species such as low-level pine and fir, boxwood and indigenous hardwoods and other variations may be used for specific conditions where they were or would have been used.

Wood fasteners such as square or cut nails may be used with a maximum increase of 50 percent over wire nails for shear.

SECTION 8-808 – CONCRETE

8-808.1 Materials. Natural cement concrete, unreinforced rubble concrete and similar materials may be utilized wherever that material is used historically. Concrete of low strength and with less reinforcement than required by the regular code may remain with the architect or engineer assigning appropriate values of strength based on testing of samples of the materials. Bond and development lengths shall be determined based on historical information or tests.

8-808.2 Detailing. The architect or engineer shall carefully evaluate all detailing provisions of the regular code which are not met and shall consider the implications of these variations on the ultimate performance of the structure, giving due consideration to ductility and reserve strength.

SECTION 8-809 – STEEL AND IRON

The hand-built, untested use of wrought or black iron, the use of cast iron or grey iron, and the myriad joining methods that are not specifically allowed by code may be used wherever applicable and wherever they have proven their worth under the considerable span of years involved with most historical buildings. Uplift capacity should be evaluated and strengthened where necessary. Fixed conditions or mid height lateral loads on cast iron columns that could cause failure should be taken into account. Existing structural wrought, forged steel or grey iron may be assigned the maximum working stress prevalent at the time of original construction.

SECTION 8-810 – HOLLOW CLAY TILE

The historic performance of hollow clay tile in past earthquakes shall be carefully considered in evaluating walls of hollow clay tile construction. Suitable protective measures shall be provided to prevent blockage of stair shafts, exitways and public ways following an earthquake.

SECTION 8-811 – VENEERS

8-811.1 Terra Cotta and Stone. Terra cotta, cast stone and natural stone veneers shall be investigated for the presence of suitable anchorage. Steel anchors shall be investigated for deterioration or corrosion. New or supplemental anchorage shall be provided as appropriate.

8-811.2 Anchorage. Brick veneer with anchorage at spacings greater than required by the regular code may remain provided the anchorages have not corroded. Nail strength in withdrawal in wood sheathing may be utilized to its capacity in accordance with code values.

SECTION 8-812 – GLASS AND GLAZING

8-812.1 Glazing Subject to Human Impact. Historic glazing material located in areas subject to human impact may be approved subject to the concurrence of the enforcing agency when alternative protective measures are provided. These measures may include, but not be limited to, additional glazing panels, protective film, protective guards or systems, and devices or signs which would provide adequate public safety.

8-812.2 Glazing in Fire-rated Systems. See Section 8-402.3.

TABLE 8-8-A—ALLOWABLE VALUES FOR EXISTING MATERIALS

EXISTING MATERIALS OR CONFIGURATIONS OF MATERIALS	ALLOWABLE VALUES X14.594 for N/m
1. Horizontal diaphragms[2]	
1.1 Roofs with straight sheathing and roofing applied directly to the sheathing	100 lbs. per foot for seismic shear
1.2 Roofs with diagonal sheathing and roofing applied directly to the sheathing	250 lbs. per foot for seismic shear
1.3 Floors with straight tongue-and-groove sheathing	100 lbs. per foot for seismic shear
1.4 Floors with straight sheathing and finished wood flooring with board edges offset or perpendicular	500 lbs. per foot for seismic shear
1.5 Floors with diagonal sheathing and finished wood flooring	600 lbs. per foot for seismic shear
2. Croswalls[2,3]	
2.1 Plaster on wood or metal lath	Per side: 200 lbs. Per foot for seismic shear
2.2 Plaster on gysum lath	175 lbs. Per foot for seismic shear
2.3 Gypsum wallboard, unblocked edges	75 lbs. Per foot for seismic shear
2.4 Gypsum wallboard, blocked edges	125 lbs. Per foot for seismic shear
3. Existing footings, wood framing, structural steel and reinforced steel	
3.1 Plain concrete footings	F_c = 1,500 psi (10.34 Mpa) unless otherwise shown by tests[4]
3.2 Douglas fir wood	Allowable stress same as D.F. No. 1[4]
3.3 Reinforcing steel	F_t = 18,000 lbs. Per square inch (124.1 M/mm^2) maximum
3.4 Structural steel	F_t = 20,000 lbs. Per square inch (137.9 M/mm^2) maximum[4]

[1] Material must be sound and in good condition.
[2] A one-third increase in allowable stress is not allowed.
[3] Shear values of these materials may be combined, except the total combined value shall not exceed 300 pounds per foot (4380 N/m).
[4] Stresses given may be increased for combinations of loads as specified in the regular code.

TABLE 8-8-B—ALLOWABLE VALUES OF NEW MATERIALS USED IN CONJUNCTION WITH EXISTING CONSTRUCTION

NEW MATERIALS OR CONFIGURATIONS OF MATERIALS	ALLOWABLE VALUES
1. Horizontal diaphragms[2]	
1.1 Plywood sheathing nailed directly over existing straight sheathing with ends of plywood sheets bearing on joists or rafters and edges of plywood located on center of individual sheathing boards	225 lbs. Per foot (3283 N/m)
1.2 Plywood sheathing nailed directly over existing diagonal sheathing with ends of plywood sheets bearing on joists or rafters	375 lbs. Per foot (5473 N/m)
1.3 Plywood sheathing nailed directly over existing straight or diagonal sheathing with ends of plywood sheets bearing on joists or rafters with edges of plywood located over new blocking and nailed to provide a minimum nail penetration into framing and blocking of 1 $^{5}/_{8}$ inches (41 mm)	75 percent of the values specified in the regular code
2. Shear walls: (general procedure) Plywood sheathing applied directly over wood studs. No value shall be given to plywood applied over existing plaster or wood sheathing	100 percent of the value specified in the regular code for shear walls
3. Crosswalls: (special procedure only)	
3.1 Plywood sheathing applied directly over wood studs. No value shall be given to plywood applied over existing plaster or wood sheathing	133 percent of the value specified in the regular code for shear walls
3.2 Drywall or plaster applied directly over wood studs	100 percent of the values in the regular code
Drywall or plaster applied to sheathing over existing wood studs	The values specified in the regular code reduced as noted[3](UBC Table 25-1, Footnote 1)
4. Tension bolts	
4.1 Bolts extending entirely through unreinforced masonry walls secured with bearing plates on far side of a three-wythe-minimum wall with at least 30 square inches (19350 mm^2) of area[4,5]	1,800 lbs. (8006 N) per bolt[6] 900 lbs. (4003 N) per bolt for two-wythe walls[6]
4.2 Bolts extending to the exterior face of the wall with a 2 ½-inch (63.5 mm) round plate under the head an drilled at an angle of 221/2 degrees to the horizontal, installed as specified for shear bolts[4,5,7]	1,200 lbs. (5338 N) per bolt
5. Shear bolts Bolts embedded a minimum of 8 inches (203 mm) into unreinforced masonry walls and centered in a 2 ½ -inch-diameter (63.5 mm) hole filled with dry-pack or nonshrink grout. Through bolts with first 8 inches (203 mm) as noted above and embedded bolts as noted in Item 4.2 [5,7]	½-inch (12.7 mm) diameter = 350 lbs. (1557 N)[6] 5/8-inch (15.9 mm) diameter = 500 lbs. (2224 N)[6] ¾-inch (19 mm) diameter = 750 lbs (3336 N)[6]
6. Infilled walls Reinforced masonry infilled openings in existing unreinforced masonry walls. Provide keys or dowels to match reinforcing	Same as values specified for unreinforced masonry walls
7. Reinforced masonry Masonry piers and walls reinforced per the regular code	Same as values specified in the regular code
8. Reinforced concrete Concrete footings, walls and piers reinforced as specified in the regular code and designed for tributary loads	Same values specified in the regular code[8]

[1]A one-third increase in allowable stress is not allowed, except as noted.
[2]Values and limitations are for nailed plywood. Higher values may be used for other fastening systems such as wood screws or staples when approved by the enforcing authority.
[3]In addition to existing sheathing value.
[4]Bolts to be 1/2-inch (12.7 mm) minimum diameter.
[5]Drilling for bolts and dowels shall be done with an electric rotary drill. Impact tools shall not be used for drilling holes or tightening anchors and shear bolt nuts.
[6]Other bolt sizes, values and installation methods may be used provided a testing program is conducted in accordance with regular code standards. Bolt spacing shall not exceed 6 feet (1830 mm) on center and shall not be less than 12 inches (305 mm) on center.
[7]Embedded bolts to be tested as specified in regular code standards.
[8]Stresses given may be increased for combinations of loads as specified in the regular code.

Chapter 8-9
MECHANICAL, PLUMBING AND ELECTRICAL REQUIREMENTS

SECTION 8-901 – PURPOSE, INTENT AND SCOPE

8-901.1 Purpose. The purpose of this chapter is to provide alternative regulations for the mechanical, plumbing and electrical systems of buildings or structures designated as qualified historical buildings or properties. These regulations require enforcing agencies to accept any reasonable equivalent alternatives to the regular code when dealing with qualified historical buildings or properties.

8-901.2 Intent. It is the intent of these regulations to preserve the integrity of qualified historical buildings or properties while providing a reasonable level of protection from fire, health, and life-safety hazards (hereinafter referred to as safety hazards) for the building occupants.

8-901.3 Scope. These regulations are to be applied in combination with the regular code whenever application with the regular code is desired by owners of qualified historical buildings or properties.

8-901.4 Safety Hazard. No person shall permit any safety hazard to exist on premises under their control, or fail to take immediate action to abate such hazard. Existing systems which constitute a safety hazard when operational may remain in place provided they are completely and permanently rendered inoperative. Safety hazards created by inoperative systems shall not be permitted to exist. Requirements of the regular code concerning general regulations shall be complied with, except that the enforcing agency shall accept alternatives which do not cause a safety hazard.

8-901.5 Energy Conservation. [8-604] Historical buildings covered by this part are exempted from compliance with energy conservation standards. When new appliances or equipment are added, they should comply with the regular code.

SECTION 8-902 – MECHANICAL

8-902.1 General. Mechanical systems shall comply with the regular code unless otherwise modified by this chapter.

8-902.1.1 The provisions of these regulations shall apply to the acceptance, location, installation, alteration, repair, relocation, replacement or addition of any heating, ventilating, air conditioning, domestic incinerators, kilns or miscellaneous heat-producing appliances or equipment within or attached to a historical building.

8-902.1.2 Existing systems which do not, in the opinion of the enforcing agency, constitute a safety hazard may remain in use.

8-902.1.3 The enforcing agency may approve any alternative to these regulations which would achieve equivalent life safety.

8-902.2 Heating Facilities. All dwelling-type occupancies covered under this chapter shall be provided with heating facilities. Wood-burning or pellet stoves or fireplaces may be acceptable as heating facilities.

8-902.3 Fuel Oil Piping and Tanks. Fuel oil piping and tanks shall comply with regular code requirements except that the enforcing agency may waive such requirements where the lack of compliance does not create a safety or environmental hazard.

8-902.4 Heat-producing and Cooling Equipment. Heat-producing and cooling equipment shall comply with the regular code requirements governing equipment safety, except that the enforcing agency may accept alternatives which do not create a safety hazard.

8-902.5 Combustion Air.

8-902.5.1 All fuel-burning appliances and equipment shall be provided a sufficient supply of air for proper fuel combustion, ventilation, and draft hood dilution.

8-902.5.2 The enforcing agency may require operational tests for combustion air systems which do not comply with applicable requirements of the regular code.

8-902.6 Venting of Appliances.

8-902.6.1 Every appliance required to be vented shall be connected to an approved venting system. Venting systems shall develop a positive flow adequate to convey all combustion products to the outside atmosphere.

8-902.6.2 Masonry chimneys in structurally sound condition may remain in use for all fuel-burning appliances. Terra cotta chimneys and Type C metallic vents installed in concealed spaces shall not remain in use unless otherwise mitigated and approved on a case-by-case basis.

8-902.6.3 The enforcing agency may require operational tests for venting systems which do not comply with applicable requirements of the regular code.

8-902.7 Ducts.

8-902.7.1 New ducts shall be constructed and installed in accordance with applicable requirements of the regular code.

8-902.7.2 Existing duct systems which do not comply with applicable requirements of the regular code and do not, in the opinion of the enforcing agency, constitute a safety or health hazard may remain in use.

8-902.8 Ventilating Systems.

8-902.8.1 Ventilating systems shall be installed so that no safety hazard is created.

8-902.8.2 Grease hoods and grease hood exhaust systems shall be furnished and installed in accordance with applicable requirements of the regular code. Existing systems which are altered shall comply with the regular code.

8-902.9 Miscellaneous Equipment Requirements.

8-902.9.1 The following appliances and equipment shall be installed so that no safety hazard is created: warm air furnaces, space heating equipment, vented decorative appliances, floor furnaces, vented wall furnaces, unit heaters, room heaters, absorption units, refrigeration equipment, duct furnaces, infrared radiant heaters, domestic incinerators, miscellaneous heat-producing appliances and water heaters.

8-902.9.2 Storage-type water heaters shall be equipped with a temperature- and pressure-relief valve in accordance with applicable requirements of the regular code.

SECTION 8-903 – PLUMBING

8-903.1 General. Plumbing systems shall comply with the regular code unless otherwise noted.

8-903.1.1 The provisions of these regulations shall apply to the acceptance, location, installation, alteration, repair, relocation, replacement or addition of any plumbing system or equipment within or attached to a historical building.

8-903.1.2 Existing systems which do not, in the opinion of the enforcing agency, constitute a safety hazard may remain in use.

8-903.1.3 The enforcing agency may approve any alternative to these regulations which achieves reasonably equivalent life safety.

8-903.2 Dwelling-type Occupancies.

8-903.2.1 Where toilet facilities are provided, alternative sewage disposal methods may be acceptable if approved by the local health department. In hotels, where private facilities are not provided, water closets at the ratio of one for each 15 rooms may be acceptable.

8-903.2.2 Toilet facilities are not required to be on the same floor or in the same building as sleeping rooms. Water-flush toilets may be located in a building immediately adjacent to the sleeping rooms. When alternative sewage disposal methods are utilized, they shall be located a minimum distance from the sleeping rooms or other locations as approved by the local health department.

8-903.2.3 Kitchen sinks shall be provided in all kitchens. The sink and countertop may be of any smooth nonabsorbent finish which can be maintained in a sanitary condition.

8-903.2.4 Hand washing facilities shall be provided for each dwelling unit and each hotel guest room. A basin and pitcher may be acceptable as adequate hand washing facilities.

8-903.2.5 Hot or cold running water is not required for each plumbing fixture, provided a sufficient amount of water is supplied to permit the fixture's normal operation.

8-903.2.6 Bathtubs and lavatories with filler spouts less than 1 inch (25.4 mm) above the fixture rim may remain in use provided there is an acceptable overflow below the rim.

8-903.3 Materials. New, nonhistorical materials shall comply with the regular code requirements. The enforcing agency shall accept alternative materials which do not create a safety hazard where their use is necessary to maintain the historical integrity of the building.

8-903.4 Drainage and Vent Systems. Plumbing fixtures shall be connected to an adequate drainage and vent system. The enforcing agency may require operational tests for drainage and vent systems which do not comply with applicable requirements of the regular code. Vent terminations may be installed in any location which, in the opinion of the enforcing agency, does not create a safety hazard.

8-903.5 Indirect and Special Wastes. Indirect and special waste systems shall be installed so that no safety hazard is created. Chemical or industrial liquid wastes which may detrimentally affect the sanitary sewer system shall be pretreated to render them safe prior to discharge.

8-903.6 Traps and Interceptors. Traps and interceptors shall comply with the regular code requirements except that the enforcing agency shall accept alternatives which do not increase the safety hazard. Properly maintained .S. and drum traps may remain in use.

8-903.7 Joints and Connections.

8-903.7.1 Joints and connections in new plumbing systems shall comply with applicable requirements of the regular code.

8-903.7.2 Joints and connections in existing or restored systems may be of any type that does not create a safety hazard.

8-903.8 Water Distribution. Plumbing fixtures shall be connected to an adequate water distribution system. The enforcing agency may require operational tests for water distribution systems which do not comply with applicable requirements of regular code. Prohibited (unlawful) connections and cross connections shall not be permitted.

8-903.9 Building Sewers and Private Sewage Disposal Systems. New building sewers and new private sewage disposal systems shall comply with applicable requirements of the regular code.

8-903.10 Fuel-gas Piping. Fuel-gas piping shall comply with the regular code requirements except that the enforcing agency shall accept alternatives which do not increase the safety hazard.

SECTION 8-904 – ELECTRICAL

8-904.1 General. Electrical systems shall comply with the regular code unless otherwise permitted by this code, or approved by the authority having jurisdiction.

8-904.1.1 The provisions of these regulations shall apply to the acceptance, location, installation, alteration, repair, relocation, replacement or addition of any electrical system or portion thereof, the premise wiring, or equipment fixed in place as related to restoration within or attached to a qualified historical building.

8-904.1.2 Existing systems, wiring methods and electrical equipment which do not, in the opinion of the enforcing agency, constitute a safety hazard may remain in use.

8-904.1.3 The enforcing agency may approve any alternative to these regulations which achieves equivalent safety.

8-904.1.4 Archaic methods that do not appear in present codes may remain and may be extended if, in the opinion of the enforcing agency, they constitute a safe installation.

8-904.2 Wiring Methods.

8-904.2.1 Where existing branch circuits do not include an equipment grounding conductor and, in the opinion of the enforcing agency, it is impracticable to connect an equipment grounding
conductor to the grounding electrode system, receptacle convenience outlets may remain the nongrounding type.

8-904.2.2 Ground fault circuit interrupter (GFCI) protected receptacles shall be installed where replacements are made at receptacle outlets that are required to be so protected by the regular code in effect at the time of replacement. Metallic face plates shall either be grounded to the grounded metal outlet box or be grounded to the grounding-type device when used with devices supplied by branch circuits without equipment grounding conductors.

8-904.2.3 Grounding-type receptacles shall not be used without a grounding means in an existing receptacle outlet unless GFCI protected. Existing non grounding receptacles shall be permitted to be replaced with non grounding or grounding-type receptacles where supplied through a ground fault circuit interrupter.

8-904.2.4 Extensions of existing branch circuits without equipment-grounding conductors shall be permitted to supply grounding-type devices only when the equipment grounding conductor of the new extension is grounded to any accessible point on the grounding electrode system.

8-904.2.5 Receptacle outlet spacing and other related distance requirements shall be waived or modified if determined to be impracticable by the enforcing agency.

8-904.2.6 For the replacement of lighting fixtures on an existing non grounded lighting outlet, or when extending an existing non grounding lighting outlet, the following shall apply:

1. The exposed conductive parts of lighting fixtures shall be connected to any acceptable point on the grounding electrode system, or

2. The lighting fixtures shall be made of insulating material and shall have no exposed conductive parts.

EXCEPTION: Lighting fixtures mounted on electrically nonconductive ceilings or walls where located not less than either 8 feet (2438 mm) vertically or 5 feet (1524 mm) horizontally from grounded surfaces.

8-904.2.7 Lighting load calculations for services and feeders may be based on actual loads as installed in lieu of the .watts per square foot. method.

8-904.2.8 Determination of existing loads may be based on maximum demand recordings in lieu of calculations provided all of the following are met:

1. Recordings are provided by the serving agency.

2. The maximum demand data is available for a one-year period.

EXCEPTION: If maximum demand data for a one-year period is not available, the maximum demand data shall be permitted to be based on the actual amperes continuously recorded over a minimum 30-day period by a recording ammeter connected to the highest loaded phase of the feeder or service. The recording should reflect the maximum demand when the building or space is occupied and include the measured or calculated load at the peak time of the year, including the larger of the heating or cooling equipment load.

3. There has been no change in occupancy or character of load during the previous 12 months.

4. The anticipated load will not change, or the existing demand load at 125 percent plus the new load does not exceed the ampacity of the feeder or rating of the service.

Chapter 8-10
HISTORIC DISTRICTS, SITES AND OPEN SPACES

SECTION 8-1001 – PURPOSE, SCOPE AND APPLICABILITY

8-1001.1 Purpose. It is the purpose of this chapter to permit alternative regulations and criteria to govern the impact of development or redevelopment on sites, open space, accessway, artifacts and landscaped areas coinciding with the rehabilitation, preservation, restoration, relocation or reconstruction of designated qualified historical buildings or properties.

8-1001.2 Scope. The range of forms and physical features to which alternative design standards and regulations may be applied include, but are not limited to, natural open space, including earth, rock, water and vegetation; landscaping, gardens and plant materials; landscape features, including walls, fences, trellises, yard lights, pools, lawn and garden ornamentations and the like; patios, courts, malls, play areas, shelters and promenades; pedestrian and vehicular access, including paths, sidewalks, driveways, parking spaces, service delivery, trash and garbage disposal areas; grading, topography and erosion control; and public utilities.

8-1001.3 Applicability. Alternative regulations and criteria shall apply to all sites, open space, accessways, artifacts and landscape areas associated with qualified historic buildings or historic
districts.

SECTION 8-1002 – SITE RELATIONS

Insofar as regular regulations, standards and requirements may impact on sites, open space, accessway, artifacts and landscaped areas within historic districts or beyond the qualified historical property proper, those areas and physical features come within the purview of this code. A designated historic building or district may be considered to include the site, open space, accessway and landscaped areas beyond the immediate structure as these elements are an integral part of and significant to the historic structure or district.

The relationship between a structure and its site is important and of special importance in historic districts. Districts consist of a series of buildings that form the urban character of the area and the ties to less-significant structures which support the district. Viewed as a whole, with the spaces between the structures (including streets, sidewalks, landscaping and street furniture) a total identity of place is created.

Chapter 35
UNIFORM BUILDING CODE STANDARDS

SECTION 3504 – RECOGNIZED STANDARDS

3504.1.3 [For SFM] National Standards.

1. *NFPA 11, 1998 Edition, Low-Expansion Foams.*

2. *NFPA 11A, 1999 Edition, Medium- and High-Expansion Foam Systems.*

3. *NFPA 12, 1998 Edition, Carbon Dioxide Extinguishing Systems.*

4. *NFPA 12A, 1997 Edition, Halon 1301 Fire Extinguishing Systems.*

5. *NFPA 13, 1999 Edition, The Installation of Automatic Sprinkler Systems, as amended.*

6. *NFPA 13D, 1999 Edition, Installation of Sprinkler Systems in One-and Two-Family Dwellings and Manufactured Homes.*

7. *NFPA 13R, 1999 Edition, Installation of Sprinkler Systems in Residential Occupancies up to and Including Four Stories in Height.*

8. *NFPA 14, 2000 Edition, Installation of Standpipe, Private Hydrant and Hose Systems.*

9. *NFPA 15, 1996 Edition, Water Spray Fixed Systems for Fire Protection.*

10. *NFPA 16, 1999 Edition, Installation of Deluge, Foam-Water Sprinkler and Foam-Water Spray Systems.*

11. *NFPA 17, 1998 Edition, Dry Chemical Extinguishing Systems.*

12. *NFPA 17A, 1998 Edition, Wet Chemical Extinguishing Systems.*

13. *NFPA 20, 1999 Edition, Installation of Stationary Pumps for Fire Protection.*

14. *NFPA 22, 1998 Edition, Water Tanks for Private Fire Protection.*

15. *NFPA 24, 1995 Edition, Installation of Private Fire Service Mains and Their Appurtenances.*

16. *NFPA 37, 1998 Edition, Installation and Use of Stationary Combustion Engines and Gas Turbines.*

17. *NFPA 50, 1996 Edition, Bulk Oxygen Systems at Consumer Sites.*

18. *NFPA 54, 1996 Edition, National Fuel Gas Code.*

19. *NFPA 58, 1998 Edition, Standard for the Storage and Handling of Liquefied Petroleum Gases.*

20. *NFPA 72, 1999 Edition, National Fire Alarm Code, as amended. [The SFM does not adopt NFPA 72* r*, 1999 Edition, Chapter 8.]*

20.1 *NFPA 72* r*, 1999 Edition, National Fire Alarm, as amended, .Household Fire Warning Equipment.*

21. *NFPA 92 A, 2000 Edition, Smoke-Control Systems.*

22. *NFPA 99, 1999 Edition, Health Care Facilities, Chapter 4, Gas and Vacuum Systems.*

23. *NFPA 99 C, 1999 Edition, Gas and Vacuum Systems.*

24. *NFPA 253, 2000 Edition, Test for Critical Radiant Flux of Floor Covering Systems Using a Radiant Heat Energy Source.*

25. *NFPA 2001, 2000 Edition, Clean Agent Fire Extinguishing Systems.*

26. *UL13, Power-limited Circuit Cables, Second Edition, 1996.*

27. *UL 38, Manually Actuated Signaling Boxes, Seventh Edition, March 26, 1999, with revisions through April 28, 2000.*

28. *UL 193, Alarm Valves for Fire-Protection Service, Ninth Edition, March 24, 1993.*

29. *UL 217, Single- and Multiple-Station Smoke Alarm, as amended, Fifth Edition, 1997.*

30. *UL 228, Door Closers/Holders, with or without Integral Smoke Alarms, Fourth Edition, April 29, 1997, with revisions through January 21, 1999.*

31. *UL 260, Dry Pipe and Deluge Valves for Fire Protection Service, Sixth Edition, May 27, 1994, with revisions through February 15, 1999.*

32. *UL 262, Gate Valves for Fire Protection Service, Seventh Edition, May 27, 1994, with revisions through January 28, 1998.*

33. *UL 268, Smoke Detectors for Fire Protective Signaling Systems, as amended, Fourth Edition, December 30, 1996, with revisions through January 4, 1999.*

34. *UL 268A, Smoke Detectors for Duct Application, as amended, Third Edition, May 15, 1998.*

35. *UL 312, Check Valves for Fire-Protection Service, Eighth Edition, June 2, 1993, with revisions through February 17, 1994.*

36. *UL 346, Waterflow Indicators for Fire Protective Signaling Systems, Fourth Edition, 1994.*

37. *UL 464, Audible Signal Appliances, Seventh Edition, February 23, 1996, with revisions through May 11, 1999.*

38. *UL 497B, Protectors for Data Communication and Fire Alarm Circuits, Second Edition, December 28, 1993, with revisions through October 20, 1994.*

39. *UL 521, Heat Detectors for Fire Protective Signaling Systems, Seventh Edition, February 19, 1999.*

40. *UL 539, Single- and Multiple-Station Heat Detectors, Fourth Edition, 1995.*

41. *UL 632, Electrically Actuated Transmitters, Sixth Edition, 1994.*

42. *UL 753, Alarm Accessories for Automatic Water Supply Valves for Fire Protection Service, Sixth Edition, 1994.*

43. *UL 813, Commercial Audio Equipment, Seventh Edition, December 13, 1996, with revisions through March 30, 1999.*

44. *UL 864, Control Units for Fire Protective Signaling Systems, as amended, Eighth Edition, November 27, 1996, with revisions through March 30, 1999.*

45. *UL 884, Underfloor Electric Raceways and Fittings, Eighth Edition, 1987, Tenth Edition, 1998.*

46. *UL 913, Intrinsically Safe Apparatus for Use in Class I, II, and III, Division 1, Hazardous Locations, Fifth Edition, February 21, 1997, with revisions dated February 24, 1997.*

47. *UL 924, Emergency Lighting and Power Equipment, Eighth Edition, 1999.*

48. *UL 985, Household Fire Warning System Units, as amended, Fifth Edition, May 26, 2000.*

49. *UL 1091, Butterfly Valves for Fire Protection Service, Fifth Edition, 1994.*

50. *UL 1424, Cables for Power-limited Fire Protective Signaling Circuits, Second Edition, 1996.*

51. *UL 1480, Speakers for Fire Protective Signaling Systems, Fourth Edition, July 28, 1998.*

52. *UL 1481, Power Supplies for Fire Protective Signaling Systems, Fourth Edition, April 9, 1999.*

53. *UL 1711, Amplifiers for Fire Protective Signaling Systems, First Edition, January 5, 1987, with revisions through October 12, 1992.*

54. *UL 1730, Smoke Detector Monitors and Accessories (annunciators) for Individual Living Units of Multifamily Residences and Hotel/Motel Rooms, Third Edition, September 18, 1998, with revisions through May 17, 1999.*

55. *UL 1971, Signaling Devices for the Hearing Impaired, Second Edition, October 17, 1995, with revisions through May 24, 2000.*

56. *UL 1484, Residential Gas Detectors, Third Edition, November 30, 1994, with revisions dated December 1, 1994.*

57. *UL 1994, Low Level Path Marking and Lighting Systems, Sixth Edition, 1994.*

58. *UL 2034, Single and Multiple Station Carbon Monoxide Alarms, Second Edition, October 29, 1996, with revisions through June 2, 1999.*

59 *UL 2079, Tests for Fire Resistance of Building Joint Systems, Third Edition, July 31, 1998.*

60. *FM Class No. 3260, Flame Radiation Detectors for Automatic Fire Alarm Signaling, February 1994 Edition.*

3504.2 [For DSA/AC] Division of the State Architect, Access Compliance Standards

3504.2.1 American National Standards Institute (ANSI) 17.1-86.

NOTES:
1. *DSA/AC adopts ANSI 17.1-86 by reference for the specific scope of application for which DSA/AC is responsible for enforcement, and the specific statutory authority of DSA/AC to adopt and enforce such provisions of building standards per 101.17.11.*

2. *The Division of the State Architect, Access Compliance Standards referencing ANSI 17.1-86 are also referenced in Title 24, Part 12.*

3504.2.2 American Society of Mechanical Engineers (ASME 17.1-90).

NOTES:
1. *DSA/AC adopts ASME 17.1-90 by reference for the specific scope of application for which DSA/AC is responsible for enforcement, and the specific statutory authority of DSA/AC to adopt and enforce such provisions of building standards per 101.17.11.*

2. *The Division of the State Architect, Access Compliance Standards referencing ASME 17.1-90 are also referenced in Title 24, Part 12.*

SECTION 3505 – AMENDMENTS TO NATIONAL STANDARDS

3505.1 [For DSA/AC, SFM] NFPA 72, 1999 Edition as amended.

Add a definition of "central control station" as follows:

> ***CENTRAL CONTROL STATION*** *is a central control station for fire department operations as referred to in the California Building Code and California Fire Code. (See also FIRE COMMAND CENTER.)*

Add a subsection 1-5.2.6 as follows:

> ***Sec. 1-5.2.6. Secondary Supply Capacity and Sources.*** *The secondary supply shall automatically supply the energy to the system within 30 seconds, and without loss of signals, wherever the primary supply is incapable of providing the minimum voltage required for proper operation. The secondary (standby) power supply shall supply energy to the system in the event of total failure of the primary (main) power supply or when the primary voltage drops to a level insufficient to maintain functionality of the control equipment and system components. Under maximum quiescent load (system functioning in a non-alarm condition), the secondary supply shall have sufficient capacity to operate a protected premises, central station, or proprietary system for 24 hours, or an auxiliary or remote station system for 60 hours; and, at the end of that period, shall be capable of operating all alarm notification appliances used for evacuation or to direct aid to the location of an emergency for 5 minutes. The secondary power supply for emergency voice/alarm communications service shall be capable of operating the system under maximum quiescent load for 24 hours and then shall be capable of operating the system during a fire or other emergency condition for a period of 2 hours. Fifteen minutes of evacuation alarm operation at maximum connected load shall be considered the equivalent of 2 hours of emergency operation.*
>
> *For a combination system, the secondary supply capacity required above shall include the load of any non-fire related equipment, functions or features.*
>
> *The secondary supply shall consist of one of the following:*
>
> > ***(a)*** *A storage battery arranged in accordance with 1-5.2.9.*
> >
> > ***(b)*** *An automatic starting, engine-driven generator arranged in accordance with 1-5.2.10 and storage batteries with 4 hours of capacity under maximum normal load followed by 5 minutes of alarm/emergency capacity arranged in accordance with 1-5.2.9.*
> >
> > ***(c)*** *Multiple engine-driven generators, one of which is arranged for automatic starting, arranged in accordance with 1-5.2.10, and capable of supplying the energy required herein, with the largest generator out of service. The second generator shall be permitted to be started by pushbutton.*
>
> *Operation on secondary power shall not affect the required performance of a fire alarm system. The system shall produce the same alarm, supervisory, and trouble signals and indications (excluding the ac power indicator) when operating from the standby power source as are produced when the unit is operating from the primary power source.*

Amend Section 1.5.5.4, as follows:

> ***Sec. 1.5.5.4. Wiring.*** *The installation of all wiring, cable and equipment shall be in accordance with the California Electrical Code, and specifically with Article 760, Article 770 and Article 800, where applicable. Optical Fiber Cables shall be protected against mechanical injury in accordance with Article 760.*

Add a subsection 1-7.2.2 as follows:

> ***(b)*** *Record drawings; and*
>
> ***(c)*** *Written operating instructions shall be provided at a location approved by the enforcing agency.*

Add a Section 1-5.4.7.1 as follows:

Sec. 1-5.4.7.1. Supplementary Audible Notification Appliances. *Every public, private or parochial school building having an occupant load of fifty (50) or more students or more than one classroom shall sound the California uniform fire alarm signal as described in Education Code Sections 32002, 32003 and 32004.*

EXCEPTION: *When a fire alarm system having a distinctive tone, and which is used for no other purpose, is installed, the manner of sounding such alarm shall not be subject to the provisions of Education Code Sections 32002, 32003 and 32004.*

Add a Section 1-5.4.8 as follows:

Sec. 1-5.4.8 Alarm Signal Deactivation. *A means for turning off activated alarm notification appliances shall be permitted only where it is key-operated, located within a locked cabinet, or arranged to provide equivalent protection against unauthorized use. Such means shall be permitted only if a visible zone alarm indication or the equivalent has been provided as specified in 1-5.7.1, and subsequent actuation of initiating devices on other initiating device circuits or subsequent actuation of addressable initiating devices on signaling line circuits cause the notification appliances to reactivate. A means that is left in the "off" position when there is no alarm shall operate an audible trouble signal until the means is restored to normal.*

EXCEPTION: *If permitted by the authority having jurisdiction, subsequent actuation of another addressable initiating device of the same type in the same room or space shall not be required to cause the notification appliance(s) to reactivate.*

Amend existing Section 1-5.7.1.2 as follows:

Sec. 1-5.7.1.2. Zone of Origin. *Fire alarm systems serving two or more zones shall identify the zone of origin of the alarm initiation by annunciation or coded signal as required by the authority having jurisdiction.*

Add a Section 1-6.2.2 as follows:

Sec. 1-6.2.2. *Every system shall include the following documentation, which shall be delivered to the owner or the owner's representative upon final acceptance of the system:*

(1) *******An owner's manual and installation instructions covering all system equipment*

(2) *Record drawings*

(3) *The owner's manual and the record drawings shall be provided at a location approved by the authority having jurisdiction.*

2-1 Introduction.

2-1.1* Scope. *This chapter contains minimum requirements for the selection, installation, operation and maintenance of fire warning equipment for use within family living units. The requirements of the other chapters shall not apply.*

EXCEPTION: *Where specifically indicated.*

2-1.2 Purpose.

2-1.2.1 *Household fire warning systems shall be designed and installed to provide sufficient warning of a fire to enable occupants to escape. It is recognized that household fire warning systems might not be of material assistance to all occupants, such as persons intimate with the ignition of a fire.*

2-1.2.2 *This chapter is primarily concerned with life safety, not with protection of property. It presumes that a family has an exit plan.*

2-1.3 General.

2-1.3.1 *A control and associated equipment, a multiple of single station alarm(s), or any combination thereof shall be permitted to be used as a household fire warning system, provided the requirements of 2-1.3.7 are met.*

2-1.3.2 *Detection and alarm systems for use within the protected household are covered by this chapter.*

2-1.3.3 *Supplementary functions, including the extension of an alarm beyond the household, shall be permitted and shall not interfere with the performance requirements of this chapter.*

2-1.3.4 *Where the authority having jurisdiction requires a household fire warning system to comply with the requirements of Chapter 4 or any other chapters of this code, the requirements of Section 2-2 shall still apply.*

2-1.3.5 *The definitions of Section 1-4 shall apply.*

2-1.3.6 *This chapter does not exclude the use of fire alarm systems complying with other chapters of this code in household applications, provided all of the requirements of this chapter are met or exceeded.*

2- 1.3.7 *All devices, combinations of devices and equipment to be installed in conformity with this chapter shall be approved or listed for the purposes for which they are intended.*

2-1.3.8 *A device or system of devices having materials or forms that differ from those detailed in this chapter shall be permitted to be examined and tested according to the intent of the chapter and, if found equivalent, shall be permitted to be approved.*

2-1.3.9 Equivalency. *Nothing in this code is intended to prevent the use of systems, methods, or devices of equivalent or superior quality, strength, fire resistance, effectiveness, durability and safety over those prescribed by this code, provided technical documentation is submitted to the authority having jurisdiction to demonstrate equivalency and the system, method or device is approved for the intended purpose.*

2-2 Basic Requirements.

2-2.1 Required Protection.

2-2.1.1 *This code requires the following detectors within the family living unit.*

2-2.1.1.1 *Smoke alarms shall be installed outside of each separate sleeping area in the immediate vicinity of the bedrooms and on each additional story of the family living unit, including basements and excluding crawl spaces and unfinished attics. In new construction, a smoke alarm also shall be installed in each sleeping room.*

2-2.1.1.2* *For family living units with one or more split levels (i.e., adjacent levels with less than one full story separation between levels), a smoke alarm required by 2-2.1.1.1 shall be permitted for an adjacent lower level, including basements. (See Figure A-2-2.1.1.2.)*

> ***EXCEPTION:*** *Where there is an intervening door between one level and the adjacent level, a smoke alarm shall be installed on the lower level.*

2-2.1.1.3 *Automatic sprinkler systems provided in accordance with NFPA 13D, Standard for the Installation of Sprinkler Systems in One- and Two-Family Dwellings and Manufactured Homes, or NFPA 13R, Standard for the Installation of Sprinkler Systems in Residential Occupancies up to and Including Four Stories in Height, shall be interconnected to sound alarm notification appliances throughout the dwelling where a fire warning system is provided.*

2-2.2* Alarm Notification Appliances. *Each automatic alarm initiating device shall cause the operation of an alarm that shall be clearly audible in all bedrooms over background noise levels with all intervening doors closed. The tests of audibility level shall be conducted with all household equipment that might be in operation at night in full operation.*

Examples of such equipment are window air conditioners and room humidifiers. (See A-2-2.2 for additional information.)

2-2.2.1 *In new construction, where more than one smoke alarm is required by 2-2.1, smoke alarm shall be arranged so that operation of any smoke alarm causes all smoke alarms within the dwelling to sound.*

> ***EXCEPTION:*** *Configurations that provide equivalent distribution of the alarm signal.*

2-2.2.2* Standard Signal. *Newly installed alarm notification appliances used with a household fire warning system and single and multiple station smoke alarms shall produce the audible emergency evacuation signal described in ANSI S3.41, Audible Emergency Evacuation Signal. Signals from different notification appliances shall not be required to be synchronized.*

2-2.3 Alarm Notification Appliances for the Hearing Impaired. *In a household occupied by one or more hearing impaired persons, each initiating device shall cause the operation of a visible alarm signal(s) in accordance with 2-4.4.2. Since hearing deficits are often not apparent, the responsibility for advising the appropriate persons shall be that of the hearing impaired party. The responsibility for compliance shall be that of the occupants of the family living unit.*

> ***EXCEPTION:*** *A listed tactile signal shall be permitted to be employed.*

2-3 Power Supplies.

2-3.1 General.

2-3.1.1 *All power supplies shall have sufficient capacity to operate the alarm signal(s) for at least 4 continuous minutes.*

2-3.1.2 *There shall be a primary (main) and a secondary (stand-by) power source. For electrically powered household fire warning equipment, the primary (main) power source shall be ac; the secondary (standby) power source shall be a battery.*

> ***EXCEPTIONS:***
> ***1.*** *Where the primary (main) power source is an emergency circuit or a legally required standby circuit capable of operating the system for at least 24 hours in the normal condition, followed by not less than 4 minutes of alarm, a secondary (standby) source shall not be required.*
>
> ***2.*** *Where the primary (main) power source is a circuit of an optional standby system capable of operating the system for at least 24 hours, followed by not less than 4 minutes of alarm, that meets the requirements for either an emergency system or a legally required standby system as defined in NFPA 70, National Electrical Code, Articles 700 and 701, respectively, a secondary (standby) supply shall not be required.*
>
> ***3.*** *Detectors and alarms powered from a monitored dc circuit of a control unit where power for the control unit meets the requirements of Section 2-3 and the circuit remains operable upon loss of primary (main) ac power.*
>
> ***4.*** *A detector and a wireless transmitter that serves only that detector shall be permitted to be powered from a monitored battery primary (main) source where part of a listed, monitored low power radio (wireless) system. A secondary (standby) source shall not be required.*
>
> ***5.*** *In existing construction, either an ac primary power source, as described in 2-3.2, or a monitored battery primary (main) power source, as described in 2-3.3, shall be permitted. A secondary (stand-by) source shall not be required.*
>
> ***6.*** *Visible notification appliances required by 2-4.4.2.*
>
> ***7.*** *Where the primary (main) power source is non-electrical, a secondary (standby) source shall not be required. The requirements of 2-3.5 shall apply.*

2-3.2 Primary Power Supply--AC.

2-3.2.1 *An ac primary (main) power source shall be a dependable commercial light and power supply source. A visible "power on" indicator shall be provided.*

2-3.2.2 *All electrical systems designed to be installed by other than a qualified electrician shall be powered from a source not in excess of 30 volts that meets the requirements for power limited fire alarm circuits as defined in NFPA 70, National Electrical Code, Article 760.*

2-3.2.3 *A restraining means shall be used at the plug-in of any cord-connected installation.*

2-3.2.4 *AC primary (main) power shall be supplied either from a dedicated branch circuit or the unswitched portion of a branch circuit also used for power and lighting. Operation of a switch (other than a circuit breaker) or a ground-fault circuit-interrupter shall not cause loss of primary (main) power.*

EXCEPTIONS:
1. *Single or multiple station alarms with a supervised rechargeable standby battery that provides at least 4 months of operation with a fully charged battery.*

2. *Where a ground-fault circuit-interrupter serves all electrical circuits within the household.*

2-3.2.5 *Neither loss nor restoration of primary (main) power shall cause an alarm signal.*

EXCEPTION: *An alarm signal shall be permitted within the house-hold but shall not exceed 2 seconds.*

2-3.2.6 *Where a secondary (standby) battery is provided, the primary (main) power supply shall be of sufficient capacity to operate the system under all conditions of loading with any secondary (standby) battery disconnected or fully discharged.*

2-3.3 Primary Power Supply.Monitored Battery. *Household fire warning equipment shall be permitted to be powered by a battery, provided that the battery is monitored to ensure that the following conditions are met:*

(a) *All power requirements are met for at least 1 year of battery life, including monthly testing.*

(b) *A distinctive audible trouble signal sounds before the battery is incapable of operating (from causes such as aging or terminal corrosion) the device(s) for alarm purposes.*

(c) *For a unit employing a lock-in alarm feature, automatic transfer is provided from alarm to a trouble condition.*

(d) *The unit is capable of producing an alarm signal for at least 4 minutes at the battery voltage at which a trouble signal is normally obtained, followed by not less than 7 days of trouble signal operation.*

(e) *The audible trouble signal is produced at least once every minute for 7 consecutive days.*

(f) *Acceptable replacement batteries are clearly identified by the manufacturer's name and model number on the unit near the battery compartment.*

(g) *A readily noticeable, visible indication is displayed when a primary battery is removed from the unit.*

(h) *Any unit that uses a nonrechargeable battery as a primary power supply that is capable of a 10-year or greater service life, including testing, and meets the requirements of 2-3.3 (b) through (e) shall not be required to have a replaceable battery.*

2-3.4 Secondary (Standby) Power Supply.

2-3.4.1 *Removal or disconnection of a battery used as a secondary (standby) power source shall cause a distinctive audible or visible trouble signal.*

2-3.4.2 *Acceptable replacement batteries shall be clearly identified by manufacturer's name and model number on the unit near the battery compartment.*

2-3.4.3 *Where required by law for disposal reasons, rechargeable batteries shall be removable.*

2-3.4.4 Automatic Recharging.

2-3.4.4.1 *Automatic recharging shall be provided where a rechargeable battery is used as the secondary (standby) supply. The supply shall be capable of operating the system for at least 24 hours in the normal condition, followed by not less than 4 minutes of alarm. Loss of the secondary (standby) source shall sound an audible trouble signal at least once every minute.*

2-3.4.4.2 *The battery shall be recharged within 4 hours where power is provided from a circuit that can be switched on or off by means other than a circuit breaker, or within 48 hours where power is provided from a circuit that cannot be switched on or off by means other than a circuit breaker.*

2-3.4.5 *Where automatic recharging is not provided, the battery shall be monitored to ensure that the following conditions are met:*

(a) *All power requirements are met for at least 1 year of battery life.*

(b) *A distinctive audible trouble signal sounds before the battery capacity has been depleted below the level required to produce an alarm signal for 4 minutes.*

2-3.5 Primary Power.Nonelectrical. *A suitable spring-wound mechanism shall provide power for the nonelectrical portion of a listed signal station alarm. A visible indication shall be provided to show that sufficient operating power is not available.*

2-4 Equipment Performance.

2-4.1 General. *The failure of any nonreliable or short-life component that renders the detector inoperable shall be readily apparent to the occupant of the living unit without the need for test.*

2-4.2 Smoke Alarms and Smoke Detectors. *Each smoke alarm and smoke detector shall detect abnormal quantities of smoke that can occur in a dwelling, shall properly operate in the normal environmental conditions of a household and shall be in compliance with ANS/UL 268, Standard for Safety Smoke Detectors for Fire Protective Signaling Systems, or ANS/UL 217, Standard for Safety Single and Multiple Station Smoke Alarms.*

2-4.2.1 *The alarm verification feature shall not be used for household fire warning equipment.*

2-4.3* Heat Alarms and Heat Detectors.

2- 4.3.1 *Each heat detector, including a heat detector integrally mounted on a smoke detector, shall detect abnormally high temperature or rate-of-temperature rise, and all such detectors shall be listed for not less than 50-ft (15-m) spacing.*

2-4.3.2 *Fixed temperature detectors shall have a temperature rating at least 25^0 F (13^0 C) above the normal ambient temperature and shall not be rated 50^0 F (28^0 C) higher than the maximum anticipated ambient temperature in the room or space where installed.*

2-4.4 Alarm Signaling Intensity.

2-4.4.1 *All alarm-sounding appliances shall have a minimum rating of 85 dBA at 10 ft (3 m).*

> ***EXCEPTION:*** *An additional sounding appliance intended for use in the same room as the user, such as a bedroom, may have a sound pressure level as low as 75 dBA at 10 ft (3 m).*

2-4.4.2 *Visible notification appliances used in rooms where a hearing impaired person(s) sleeps shall have a minimum rating of 177 candela for a maximum room size of 14 ft by 16 ft (4.27 m by 4.88 m). For larger rooms, the visible notification appliance shall be located within 16 ft (4.88 m) of the pillow. Visible notification appliances in other areas shall have a minimum rating of 15 candela.*

> ***EXCEPTION:*** *Where a visible notification appliance in a sleeping room is mounted more than 24 in. (610 mm) below the ceiling, a minimum rating of110 candela shall be permitted.*

2-4.5 Control Equipment.

2-4.5.1 *The control equipment shall be automatically restoring upon restoration of electrical power.*

2-4.5.2 *The control equipment shall be of a type that "locks in" on an alarm condition. Smoke detection circuits shall not be required to lock in.*

2-4.5.3 *If a reset switch is provided, it shall be of a self-restoring type.*

2-4.5.4 *An alarm-silencing switch or an audible trouble-silencing switch shall not be required to be provided.*

> ***EXCEPTION:*** *Where the switch's silenced position is indicated by a readily apparent signal.*

2-4.5.5 *Each electrical fire warning system and each single station smoke detector shall have an integral test means to allow the householder to check the system and the sensitivity of the detector(s).*

2-4.6 Monitoring Integrity of Installation Conductors. *All means of interconnecting initiating devices or notification appliances shall be monitored for the integrity of the interconnecting pathways up to the connections to the device or appliance so that the occurrence of a single open or single ground fault, which prevents normal operation of the system, is indicated by a distinctive trouble signal.*

EXCEPTIONS:
1. *Conductors connecting multiple station alarms, provided a single fault on the wiring cannot prevent single station operation of any of the interconnected detectors.*

2. *Circuits extending from single or multiple station alarms to required remote notification appliances, provided operation of the test feature on any detector causes all connected appliances to activate.*

2-4.7 Combination System.

2-4.7.1 *Where common wiring is employed for a combination system, the equipment for other than the fire warning signaling system shall be connected to the common wiring of the system so that short circuits, open circuits, grounds, or any fault in this equipment or interconnection between this equipment and the fire warning system wiring does not interfere with the supervision of the fire warning system or prevent alarm or trouble signal operation.*

2-4.7.2 *In a fire-burglar system, the operation shall be as follows:*

(a) *A fire alarm signal shall take precedence or be clearly recognizable over any other signal even when the non-fire alarm signal is initiated first.*

(b) *Distinctive alarm signals shall be used so that fire alarms can be distinguished from other functions such as burglar alarms. The use of a common sounding appliance for fire and burglar alarms shall be permitted where distinctive signals are used. (See 2-2.2.2.)*

2-4.8 Low Power Wireless Systems. *Household fire warning systems utilizing low power wireless transmission of signals within the protected household shall comply with the requirements of Section 3-13.*

EXCEPTION: *Paragraph 3-13.4.5 shall not apply.*

2-4.9 Supervising Station Systems.

2-4.9.1 *Any communications method described in Section 4-5 shall be permitted for transmission of signals from household fire warning equipment to a supervising station. All of the provisions of Section 4-5 shall apply, as appropriate.*

EXCEPTIONS:
1. *Only one telephone line shall be required for one- and two-family residences.*

2. *Each DACT shall be required to be programmed to call a single DACR number only.*

3. *Each DACT serving a one- or two-family residence shall transmit a test signal to its associated receiver at least monthly.*

2-4.9.2* *On receipt of an alarm signal from household fire warning equipment, the supervising station shall immediately (within 90 seconds) retransmit the alarm to the public fire communications center.*

EXCEPTION: *The supervising station shall be permitted to contact the residence for verification of an alarm condition and, where acceptable assurance is provided within 90 seconds that the fire service is not needed, retransmission of an alarm to the public service fire communications center shall not be required.*

2-5 Installation.

2-5.1 General.

2-5.1.1 General Provisions.

2-5.1.1.1* *All equipment shall be installed in a workmanlike manner.*

2-5.1.1.2 *All devices shall be so located and mounted that accidental operation is not caused by jarring or vibration.*

2-5.1.1.3 *All installed household fire warning equipment shall be mounted so as to be supported independently of its attachment to wires.*

2-5.1.1.4 *All equipment shall be restored to normal as promptly as possible after each alarm or test.*

2-5.1.1.5 *The supplier or installing contractor shall provide the owner with:*

(a) *An instruction booklet illustrating typical installation layouts.*

(b) *Instruction charts describing the operation, method and frequency of testing, and proper maintenance of household fire warning equipment.*

(c) *Printed information for establishing a household emergency evacuation plan.*

(d) *Printed information to inform owners where they can obtain repair or replacement service, and where and how parts requiring regular replacement (such as batteries or bulbs) can be obtained within 2 weeks.*

2-5.1.2 Interconnection of Detectors or Multiple Station Alarms.

(a) *Where the interconnected wiring is unsupervised, no more than 18 multiple station alarms shall be interconnected in a multiple station configuration.*

(b) *Where the interconnecting wiring is supervised, the number of interconnected detectors shall be limited to 64.*

2-5.1.2.1 *Interconnection that causes other alarms to sound shall be limited to an individual family living unit. Remote annunciation from single or multiple station alarms shall be permitted.*

2-5.1.2.2 *No more than 12 smoke alarms shall be interconnected in a multiple station connection. The remainder of the alarms shall be permitted to be of other types.*

2-5.2* Alarm and Detector Location and Spacing.

2-5.2.1 Smoke Alarms and Smoke Detectors.

2-5.2.1.1 *Smoke alarms and smoke detectors in rooms with ceiling slopes greater than 1 ft in 8 ft (1m in 8 m) horizontally shall be located at the high side of the room.*

2-5.2.1.2 *Smoke alarms and smoke detectors installed in a stairwell shall be so located as to ensure that smoke rising in the stairwell cannot be prevented from reaching the detector by an intervening door or obstruction.*

2-5.2.1.3 *Smoke alarms and smoke detectors installed to detect a fire in the basement shall be located in close proximity to the stairway leading to the floor above.*

2-5.2.1.4 *Smoke alarms and smoke detectors installed to comply with 2-2.1.1.1 on a story without a separate sleeping area shall be located in close proximity to the stairway leading to the floor above.*

2-5.2.1.5 *Smoke alarms and smoke detectors shall be mounted on the ceiling at least 4 in (102 mm) from a wall or on a wall with the top of the detector not less than 4 in. (102 mm) nor more than 12 in. (305 mm) below the ceiling.*

> ***EXCEPTION:*** *Where the mounting surface might become considerably warmer or cooler than the room, such as a poorly insulated ceiling below an unfinished attic or an exterior wall, the detectors shall be mounted on an inside wall.*

2-5.2.1.6 *Smoke alarms and smoke detectors shall not be located within kitchens or garages, or in other spaces where temperatures can fall below 40^0 F (4^0 C) or exceed 100^0 F (38^0 C). Smoke detectors shall not be located closer than 3 ft (0.9 m) horizontally from:*

(a) *The door to a kitchen.*

(b) *The door to a bathroom containing a tub or shower.*

(c) *The supply registers of a forced air heating or cooling system, and outside of the airflow from those registers.*

EXCEPTION: *Detectors specifically listed for the application.*

2-5.2.2* Heat Detectors Heat Alarms.

2-5.2.2.1 *On smooth ceilings, heat detectors shall be installed within the strict limitations of their listed spacing.*

2-5.2.2.2 *For sloped ceilings having a rise greater than 1 ft in 8 ft (1 m in 8 m) horizontally, the detector shall be located on or near the ceiling at or within 3 ft (0.9m) of the peak. The spacing of additional detectors, if any, shall be based on a horizontal distance measurement, not on a measurement along the slope of the ceiling.*

2-5.2.2.3* *Heat detectors and heat alarms shall be mounted on the ceiling at least 4 in. (102 mm) from a wall or on a wall with the top of the detector not less than 4 in. (102 mm) nor more than 12 in. (305 mm) below the ceiling.*

EXCEPTION: *Where the mounting surface might become considerably warmer or cooler than the room, such as a poorly insulated ceiling below an unfinished attic or an exterior wall, the detectors shall be mounted on an inside wall.*

2-5.2.2.4 *In rooms with open joists or beams, all ceiling-mounted detectors shall be located on the bottom of such joists or beams.*

2-5.2.2.5* *Detectors installed on an open-joisted ceiling shall have their smooth ceiling spacing reduced where this spacing is measured at right angles to solid joists; in the case of heat detectors, this spacing shall not exceed 1/2 of the listed spacing.*

2-5.3 Wiring and Equipment. *The installation of wiring and equipment shall be in accordance with the requirements of NFPA 70, National Electrical Code, Article 760.*

2-6 Maintenance and Tests.

2-6.1* Maintenance. *Where batteries are used as a source of energy, they shall be replaced in accordance with the recommendations of the alarm equipment manufacturer.*

EXCEPTION: *Batteries described in 2-3.3 (h).*

2-6.2* Tests.

2-6.2.1 Single and Multiple Station Smoke Alarms. *Homeowners shall inspect and test smoke alarms and all connected appliances in accordance with the manufacturer's instructions at least monthly.*

2-6.2.2 Fire Alarm Systems. *Homeowners shall test systems in accordance with the manufacturer's instructions and shall have every household fire alarm system having a control panel tested by a qualified service technician at least every 3 years. This test shall be conducted according to the methods of Chapter 7.*

2-7 Markings and Instructions. *All household fire warning equipment or systems shall be plainly marked with the following information on the unit:*

(a) *Manufacturer's or listee's name, address and model number;*

(b) *A mark or certification that the unit has been approved or listed by a testing laboratory;*

(c) *Electrical rating (where applicable);*

(d) *Temperature rating (where applicable);*

(e) *Spacing rating (where applicable);*

(f) *Operating instructions;*

(g) *Test instructions.*

(h) *Maintenance instructions;*

(i) *Replacement and service instructions.*

EXCEPTION: *Where space limitations prohibit inclusion of 2-7 (g), (h) and (i), a label or plaque suitable for permanent attachment within the living unit, or a manufacturer's manual, shall be provided with the equipment and referenced on the equipment. In the case of a household fire warning system, the required information shall be prominently displayed at the control panel.*

Add a Section 2-8.1 as follows:

Sec. 2-8.1 *Each manual fire alarm box shall be securely mounted. The operable part of each manual fire alarm box shall be not less than 31/2 ft (1.1 m) and not more than 4 ft (1.22 m) above floor level.*

Add a Section 2-8.2.4 as follows:

Sec. 2-8.2.4* *Additional manual fire alarm boxes shall be provided so that the travel distance to the nearest fire alarm box will not be in excess of 200 ft (61m) measured horizontally on the same floor.*

EXCEPTION: *When individual dwelling units are served by a single exit stairway, additional boxes at other than the ground floor may be omitted.*

Amend Section 3-2.4, Exception 4 (b) as follows:

Exception 4 to (b): Where the installation wiring is enclosed in a 2-hour-rated cable assembly, enclosed in a 2-hour-rated enclosure, other than a stairwell or installation of listed circuit integrity (C.I.) cable, which meets or exceeds a 2-hour fire-resistance rating.

Add a Section 3-4.2.2.2 as follows:

Sec. 3-4.2.2.2* *All styles of Class A circuits using physical conductors (for example, metallic, optical fiber) shall be installed such that the outgoing and return conductors, exiting from and returning to the control unit, respectively, are routed separately. The outgoing and return (redundant) circuit conductors shall not be run in the same cable assembly (that is, multiconductor cable), enclosure or raceway.*

EXCEPTION: *The outgoing and return (redundant) circuit conductors shall be permitted to be run in the same cable assembly, enclosure or raceway under any of the following conditions:*

1. *For a distance not to exceed 10 ft (3 m) where the outgoing and return conductors enter or exit the initiating device, notification appliance or control unit enclosures.*

2. *Where the vertically run conductors are contained in a 2-hour rated cable assembly or enclosed (installed) in a 2-hour rated enclosure or a listed circuit integrity (c.1.) cable, which meets or exceeds a 2-hour fire resistive rating.*

3. *Where looped conduit/raceway systems are provided, single conduit/raceway drops to individual devices or appliances shall be permitted.*

4. *Where looped conduit/raceway systems are provided, single conduit/raceway drops to multiple devices or appliances installed within a single room not exceeding 1000 ft2 (92.9 m2) in area shall be permitted.*

Sec. 4-4.5. Notification Appliances for the Hearing Impaired.

Approved notification appliances for the hearing impaired shall be installed in the following areas:

1. *Restrooms*

2. *Corridors*

3. *Music practice rooms*

4. *Band rooms*

5. *Gymnasiums*

6. *Multipurpose rooms*

7. *Occupational shops*

8. *Occupied rooms where ambient noise impairs hearing of the fire alarm*

9. *Lobbies*

10. *Meeting rooms*

11. *Any other area for common use*

NOTE: *This section is also adopted by the Division of the State Architect, Access Compliance, for buildings not regulated by the State Fire Marshal.*

The SFM does not adopt Chapter 8, of NFPA 72, 1999 edition, Fire Warning Equipment for Dwelling Units.

The SFM will maintain the use of the existing Chapter 2, House-hold Fire Warning Equipment of the 1996 edition of NFPA 72, as amended.

Amend Sections 4-3.2.1 and 4-3.3.1 as follows:

1. Sec. 4-3.2.1. *Audible notification appliances intended for operation in the public mode shall have a sound level of not less than 75dBA at 10 feet (3048 mm) or more than 110dBA at the minimum hearing distance from the audible appliance.*

Sec. 4-3.3.1. PRIVATE MODE *Audible signals intended for operation in the private mode shall have a sound level of not less than 45dBA at 10 feet (3048 mm) or more than 110dBA at the minimum hearing distance from the audible appliance.*

Add a Section 3-8.3.2.3.1 (b) as follows:

Sec. 3-8.3.2.3.1 (b) *A smoke detector continuously subjected to a smoke concentration above alarm threshold does not delay the system within functions of 1-5A by more than 30 seconds.*

Amend Section 3-8.2.3 as follows:

(c) *Operation of the patient room smoke detector in Group I, Division 1.1, 1.2 and 2 Occupancies shall not include any alarm verification feature.*

Add a Section 3-8.4.1.3.3.3 (3) c and amend as follows:

Sec. 3-8.4.1.3.3.3 (3) c*. Installation of listed circuit integrity (C.I.) cable, which meets or exceeds a two-hour fire-resistance rating.*

Sec. 3-8.4.1.3.5.5.1. *Special fire alarm provisions for occupancies having floors used for human occupancy located more than 75 feet (22 860 mm) above the lowest level of the fire department vehicle access, are found in Title 24, Part 2, Chapter 4, of the California Building Code. Those provisions include providing a central control station. The requirements provided for, in a fire command center, may be included within the central control station.*

Amend existing Section 5-8.1.2 by adding an exception as follows:

EXCEPTION: *When individual units are served by a single stairway, additional boxes at other than the ground floor may be omitted.*

SECTION 3506 – [FOR DSA/AC] CALIFORNIA STANDARDS

3506.1 [For DSA/AC] California Code of Regulations (CCR).

The CCR is the official compilation, printing and publication of adoption, amendment or repeal of regulations as published by the California Building Standards Commission for Title 24 and the Office of Administrative Law for all other Titles of the CCR.

NOTES:
1. *DSA/AC adopts the CCR by reference for the specific scope of application for which DSA/AC is responsible for enforcement, and the specific statutory authority of DSA/AC to adopt and enforce such provisions of building standards per 101.17.11.*

2. *The Division of the State Architect-Access Compliance California standards referencing CCR are also referenced in Title 24, Part 12.*

2001
California
Electrical
Code

California Code of Regulations
Title 24, Part 3

Based on 1999 National Electrical Code

Effective
November 1, 2002

ARTICLE 089 – ADMINISTRATION

(Note: Article 089 has no corresponding Article in the NEC.)

089-1. Title. *The provisions contained in this Code shall be known as the "California Electrical Code," a portion of the "California Building Standards Code," as defined in the "California Building Standards Law" commencing with Section 18901 of the Health and Safety Code, and may be cited and referred to as the "California Electrical Code." The unqualified words "This Code" as used herein refer only to the California Electrical Code, and do not include any other portions of the California Building Standards Code. These provisions may also be cited as "C.E.C." or "Part 3" within other parts of the California Building Standards Code (Title 24).*

089-2. Purpose. *The purpose of this Code is to provide minimum standards to safeguard life or limb, health, property and public welfare, and to protect against hazards that may arise from the use of electricity by regulating and controlling the design, construction, installation, quality of materials, location and operation of electrical equipment, wiring and systems.*

089-3. Scope. *The provisions of the Code and the building standards contained herein including those standards adopted by reference without amendments, where specifically adopted by the listed agencies under their cited authority and enforced by the enforcing agency specified in Section 089-8, shall apply to the construction, alteration, moving, demolition, repair and use of all electrical equipment wiring and systems in or on any building or structure or outdoors on any premise or property; except such electrical equipment, wiring and systems which are expressly exempted by Section 089-4.*

089-4. Exempted from this Code. *This Code does not cover:*

(a) *Installations in ships, watercraft other than floating dwelling units, railway rolling stock, aircraft, automotive vehicles, commercial coaches, mobile-homes and recreational vehicles.*

(b) *Installations underground in mines, mine shafts and tunnels.*

(c) *Installations of railways for generation, transformation, transmission, or distribution of power used exclusively for operation of rolling stock or installations used exclusively for signaling and communication purposes.*

(d) *Installation of communication equipment under the exclusive control of communication utilities, located outdoors or in building spaces used exclusively for such installations.*

(e) *Installations under the exclusive control of electrical utilities for the purpose of communication, or metering; or for the generation, control, transformation, transmission, and distribution of electrical energy located in buildings used exclusively by utilities for such purposes or located outdoors on property owned or leased by the utility or on public highways, streets, roads, etc., or outdoors by established rights on private property.*

Exception to (d) and (e): In places of employment, the following shall apply: installations of conductors, equipment and associated enclosures subject to the jurisdiction of the California Public Utilities Commission, that are owned, operated and maintained by an electric, communications, or electric railway utility, but not including conduits, vaults, and other like enclosures containing conductors and equipment of such a utility when located indoors or on premises not used exclusively for utility purposes, but do not apply to the utility's conductors and equipment therein.

(f) *Installations on highways or bridges.*

089-5. Non-Building Standards, Orders and Regulations.

(a) *Requirements contained in the National Electrical Code (NEC), or in any other referenced code, document or standard, which are not building standards as defined in Section 18912 of the Health and Safety Code, shall not be construed as a part of the provisions of this Code.*

(b) *For the applicability of regulations, safety and other orders, and standards which relate to the administration, enforcement, maintenance, operation and similar non-building standards, see other titles of the California Code of Regulations.*

089-6. Order of Precedence and Use.

(a) *In the event of any difference between the provisions of this Code and the National Electrical Code (NEC), or between this Code and the provisions of any other referenced code, document or standard, the text of this Code shall govern. Where a specific provision varies from a general provision, the specific provisions shall apply.*

(b) *If a section of this Code makes a cross-reference to another section or table in the National Electrical Code (NEC), such cross-referencing shall be interpreted to mean that which is shown in the NEC unless the referenced section or table has been amended or modified in this Code for the particular enforcing agency.*

(c) *If a section in the National Electrical Code (NEC) makes a cross-reference to another section or table in the NEC, such cross-referencing shall be interpreted to mean that which is shown in the NEC unless the referenced section or table has been amended or modified in this Code or the particular enforcing agency.*

(d) *When adopted by a State agency, and approved by the Commission, the text of amended provisions contained in this Code shall take precedence over the corresponding provisions of the National Electrical Code (NEC).*

089-7. Application.

5. DSA/AC-Division of the State Architect, Access Compliance.

General. *To assure that barrier-free design is incorporated in all buildings, facilities, site work and other improvements to which this code applies; to assure that these improvements are accessible to and usable by physically disabled persons. Additions, alterations and structural repairs in all buildings and facilities shall comply with these provisions for new buildings, except as otherwise provided and specified here. The provisions of these regulations shall apply to any portable buildings leased or owned by a school district, and shall also apply to temporary and emergency buildings and facilities.*

A. Application-*Publicly-Funded Buildings, Structures, Sidewalks, Curbs and Related Facilities where access for people with physical disabilities is required to areas designated in Part 2 of Title 24.*

Note: *See Government Code, commencing with Section 4450.*

(1) *All buildings, structures, sidewalks, curbs, and related facilities constructed by the use of State, county, or municipal funds, or the funds of any political subdivision of the State.*

(2) *All buildings, structures, and facilities, occupied 50 percent or more, which are leased, rented, contracted, sublet or hired for periods in excess of two years by any municipal county or State division of government or by a special district. The determination as to whether the building, structure, or facility is occupied 50 percent or more shall be based upon the usable floor areas as defined in Part 2 of this code.*

(3) *All publicly-funded living accommodations*

(4) *All publicly-funded buildings used for one or two family dwelling unit purposes shall conform to the appropriate provisions applicable to living accommodations.*

(5) *All existing publicly-funded buildings and facilities when alterations, structural repairs or additions are made to such buildings or facilities. This requirement shall apply only to the area of specific alteration, structural repair or addition and shall include those areas listed below:*

(a) *A primary entrance to the building or facility and the primary path of travel to the specific area of alteration, structural repair or addition.*

(b) *Sanitary facilities, drinking fountains, and public telephones serving the area.*

Exception No. 1: *When the total construction cost of alterations, structural repairs or additions does not exceed a valuation threshold of $50,000, based on January 1981, "ENR US-20 Cities" average construction cost index of 3372.02 ("Engineering News Record", McGraw-Hill Publishing Co.), and the enforcing agency finds that compliance with this Code creates an unreasonable hardship, compliance shall be limited to the actual work of the project.*

The enforcing agency shall, annually, update the valuation threshold to a current amount based on the increase in the index since the last figure used.

Exception No. 2: *Alterations, structural repairs or additions consisting of one of the following shall be limited to the actual work of the project:*

a. *Altering one building entrance to meet handicapped/physically disabled requirements.*

b. *Altering one existing toilet facility to meet handicapped/physically disabled requirements.*

c. *Altering existing elevators to meet handicapped/physically disabled requirements.*

d. *Altering existing steps to meet handicapped/physically disabled requirements.*

e. *Altering existing handrails to meet handicapped/physically disabled requirements.*

Exception No. 3: *Projects which consist only of heating, ventilation, air conditioning, reroofing, electrical work not involving placement of switches and receptacles, cosmetic work that does not affect access such as painting, carpeting, etc., are not considered alteration projects for purposes of accessibility for the handicapped/people with physical disabilities and shall not be subject to DSA/AC requirements.*

B. Application. *Privately-Funded Public Accommodations and Facilities where access for people with physical disabilities is required to areas designated in Part 2 or Title 24.*

Note: *See Health and Safety Code, commencing with Section 19952.*

(1) *Any building, structure, facility, complex or improved area or portion thereof which is used by the general public and shall include:*

a. *Auditoriums, convention centers ad stadiums.*

b. *Hospitals, including but not limited to, hospitals, nursing homes, and convalescent homes.*

c. *Theaters, restaurants and shopping centers.*

d. *Hotels and motels.*

e. *Passenger vehicle service stations.*

f. *Offices of physicians and surgeons.*

g. *Office buildings.*

h. *Public curbs and sidewalks.*

(2) *Any sanitary facilities which are made available for the public, clients, or employees in such accommodations or facilities.*

(3) *Any curb or sidewalk intended for public use that is constructed in this State with private funds.*

(4) *All existing privately-funded public accommodations when alterations, structural repairs or additions are made to such public accommodations as set forth under 11B.*

Exception No. 1: *In privately funded multi-storied passenger vehicle service stations, shopping centers, offices of physicians and surgeons, and office buildings, subject to this code, floors or levels above and below the first floor or ground level are exempt from these requirements if a ramp or elevator is not available to provide public access to such floors or levels.*
Exception No. 2: *In privately funded multi-storied buildings, floors or levels above the first floor or ground level are exempt from these requirements if a reasonable portion of all facilities and accommodations normally sought and used by the public in such a building are accessible to and usable by physically handicapped persons/people with physical disabilities.*

C. Enforcing Agency:

(1) *By the Director of General services where State funds are utilized for any project or where funds of counties, municipalities other political subdivisions are utilized for the construction of elementary, secondary or community college projects.*

(2) *By the governing bodies thereof where funds of counties, municipalities or other political subdivisions are utilized except as otherwise provided above.*

(3) *By the building department of every city, county, or city and county within the territorial area of its city, county, or city and county where private funds are utilized. "Building department" means the department, bureau, or officer charged with the enforcement of laws or ordinances regulating the erection or construction, or both the erection and construction of buildings.*

D. Special Conditions for the Physically Handicapped Requiring Appeals Action Ratification: *Whenever reference is made in these regulations to this section, the findings and determinations required to be rendered by the local enforcing agency shall be subject to ratification through an appeals process.*

E. Authority Cited-*Government Code Section 4450.*

F. Reference-*Government Code Sections 4450 through 4458 and Health and Safety Code Sections 19952 through 19959.*

CHAPTER 2
Wiring and Protection

Article 210 – Branch Circuits

A. General Provisions

210-7. Receptacles and Cord Connectors.

(g) ***[For HCD 1/AC with Exceptions, DSA/AC]*** *Installation* **Height.** *Where access for people with physical disabilities is required by Article 089-7, the center of receptacle outlets on branch circuits of 30 amperes or less shall be installed not more than 48 inches nor less than 15 inches above the floor or working platform.*

Exception No. 1: Receptacle outlets installed as a part of permanently installed baseboard heaters are exempt.

Exception No. 2: Required receptacle outlets shall be permitted in floors when adjacent to sliding panels or walls.

Exception No. 3: Baseboard electrical outlets used in relocatable partitions, window walls or other electrical convenience floor outlets are not subject to the minimum height requirements.

Exception No. 4: This section shall not apply to existing buildings when the enforcing agency determines that compliance with these standards would create an unreasonable hardship.

CHAPTER 3
Wiring Methods and Materials

Article 346 – Rigid Metal Conduit

This article is erroneously shown as adopted in the 2001 California Electrical Code. It will be removed by rulemaking by the California Building Standards Commission.

Article 380 – Switches

A. Installation

380-8. Accessibility and Grouping.

(c) ***[For HCD 1/AC, DSA/AC]*** **Installation.** *Where access for people with disabilities is required by Article 089-7, the center of the grip of the operating handle of controls or switches intended to be used by the occupant of the room or area to control lighting and receptacle outlets, appliances, or cooling, heating and ventilating equipment, shall be not more than 48 inches (1219 mm) above the floor or working platform.*

CHAPTER 5
Special Occupancies

Article 540 – Motion Picture Projections

This article is erroneously shown as adopted in the 2001 California Electrical Code. It will be removed by rulemaking by the California Building Standards Commission.

CHAPTER 7
Special Conditions

Article 760 – Fire Alarm Systems

A. General

760-16 *[For DSA/AC]* **Installation Height of Manual Stations.** *The center of fire alarm manual pull stations shall be located 48 inches above the level of the floor, working platform, ground surface or sidewalk.*

Exception: Enforcement official shall not retroactively require fire alarm initiating devices be relocated to a 48-inch height.

2001
California
Plumbing
Code

California Code of Regulations
Title 24, Part 5

Based on 2000 Uniform Plumbing Code

Effective
November 1, 2002
(For Errata and Supplements, see History Note Appendix)

CHAPTER 1

ADMINISTRATION

101.0 Title, Scope and General

101.1 Title

101.1.1 [For DSA/AC] *This document shall be known as the "California Plumbing Code." The provisions contained in the California Plumbing Code of the (compiled) California Building Standards Code as defined in Section 18910, Health and Safety Code, may be cited as such and are referred to hereafter as "these regulations," "these plumbing standards" or "this code."*

101.2 Purpose

101.2.2 [For DSA/AC] California Purpose. *To provide minimum standards to safeguard life or limb, health, property and public welfare, and protect against hazards that may arise from the use of plumbing piping and systems by regulating and controlling the design, construction, installation, quality of materials, location and operation of plumbing piping systems within the state of California.*

101.4 Scope

101.4.0 [For DSA/AC] Application. *The provisions of this code shall apply to the construction, alteration, moving, demolition, repair and use of all plumbing, gas, or drainage piping and systems or water heating or treating equipment in or on any building or structure or outdoors on any premises or property.*

101.4.1.1.3.1 [For DSA/AC] *Effective January 1, 1990, in new construction and those existing facilities which occupancy type are listed in Tables 4-1 and 4-4 for public use, which apply for permit to undertake construction, structural alterations, repairs or improvement which exceed 50 percent of the square footage of the entire facility, shall install water closets, urinals, lavatories and drinking fountains as stipulated in Tables 4-1 and 4-4 for public use.* Community and/or municipal parks with a bleacher capacity not exceeding 500 seats shall be exempt from the requirements of this section and Tables 4-1 and 4-4.

Note: *Each bathroom shall comply with Part 2, Chapters 11A and 11B of the California Building Code.*

101.4.1.4.2 [For DSA/AC] Conflicts Between Codes. *When the requirements of this code conflict with the requirements of the California Mechanical Code, Title 24, Part 4, the California Mechanical Code shall prevail.*

101.4.4 [For DSA/AC] Effective Date. *One hundred and eighty days after the date of publication, or as otherwise noted herein.*

101.4.4.1 [For DSA/AC] *The applicable subsection of Health and Safety Code Section 18938 is repeated here for clarity and reads as follows:*

Section 18938. (b) *The building standards contained in the Uniform Fire Code of the International Conference of Building Officials and the Western Fire Chiefs Association, Inc, the Uniform Building Code of the International Conference of Building Officials, Appendix Chapter 1 of the Uniform Code for Building Conservation of the International Conference of Building Officials, the Uniform Plumbing Code of the International Association of Plumbing and Mechanical Officials, the National Electrical Code of the National Fire Protection Association, the Uniform Mechanical Code of the International Conference of Building Officials and the International Association of Plumbing and Mechanical Officials, as referenced in the California Building Standards Code, shall apply to all occupancies throughout the state and shall become effective 180 days after publication in the California Building Standards Code by the California Building Standards Commission, or at a later date after publication established by the commission.*

101.4.4.2 [For DSA/AC] *The provisions of the model code which are adopted in this code are applicable to all occupancy groups and uses regulated by this code. The amendments to the model code are applicable only to those occupancies or uses which the state agency adopting the amendments is authorized to regulate as listed in Section 101.11*

101.6 [For DSA/AC] Nonbuilding Regulations. *Requirements contained in the U.P.C., or in any other referenced standard, code, or document, which are not building standards as defined in Section 18909, Health and Safety Code, shall not be construed as part of the provisions of this code.*

101.7 [For DSA/AC] Order of Precedence. *Where, in any specific cases, different sections of this code specify different materials, methods of construction or other requirements, the most restrictive shall govern. When there is a conflict between a general and a specific requirement, the specific requirements shall apply.*

101.8 [For DSA/AC] Format. *This part fundamentally adopts the U.P.C. by reference on a chapter-by-chapter basis. Such adoption is reflected in the adoption tables of each chapter of this part. When the adoption table of a chapter of this part makes no reference to a specific chapter of the U.PC. such chapter of the U.P.C. is not adopted as a portion of this code.*

101.9 [For DSA/AC] Validity. *If any chapter, section, subsection, sentence, clause or phrase of this code is for any reason held to be unconstitutional, contrary to statute, exceeding the authority of the state as stipulated by statutes, or otherwise inoperative, such decision shall not affect the validity of the remaining portion of this code.*

101.10 [For DSA/AC] Standard Reference Documents

101.10.1 [For DSA/AC] *The codes, standards and publications, adopted and set forth in this code, including other codes, standards and publications referred to therein are, by title and date of publication, hereby adopted as standard reference documents of this code.*

101.10.2 [For DSA/AC] *When this code does not specifically cover any subject relating to building design and construction, recognized fire-prevention engineering practices shall be employed. The National Fire Codes and the Fire Protection Handbook of the National Fire Protection Association may be used as authoritative guides in determining recognized fire-prevention engineering practices.*

101.11 [For DSA/AC] Application-Vesting Authority. *When adopted by a state agency, the provisions of these regulations shall be enforced by the appropriate enforcing agency, but only to the extent of authority granted to such agency by the state legislature.*

Following is a list of the state agencies that adopt building standards, specific scope of application of the agency responsible for enforcement, and the specific authority of each agency to adopt and enforce such provisions of building standards of this code, unless otherwise stated.

101.11.9 [For DSA/AC]

DSA/AC -- Division of the State Architect; Access Compliance.

General - *To assure that barrier-free design is incorporated in all buildings, facilities, site work and other improvements to which this code applies in compliance with state law to assure that these improvements are accessible to and usable by persons with disabilities.*

Additions, alterations and structural repairs in all buildings and facilities shall comply with these provisions for new buildings, except as otherwise provided and specified herein.

The provisions of these regulations shall apply to any portable buildings leased or owned by a school district, and shall also apply to temporary and emergency buildings and facilities.

In addition, to incorporate standards at least as restrictive as those required by the federal government for barrier-free design under:

1. Title III (Public Accommodations and Commercial Facilities), Subpart D (New Construction and Alteration) and Appendix A (Americans with Disabilities Act Accessibility Guidelines) (see 28 C.F.R., Part 36), and

2. Title II (Public Entities), Section 35.151 (New Construction and Alterations) (see 28 C.F.R., Part 35) both from the Americans with Disabilities Act of 1990, and

3. Under the Fair Housing Amendments of 1988. Some of these regulations may be more stringent than state law in order to meet the federal requirement.

The following applications apply:

***A. Application**. Publicly funded buildings, structures, sidewalks, curbs and related facilities shall be accessible to persons with disabilities as follows:*

***NOTE:** See Government Code commencing with Section 4450.*

(1) All buildings, structures, sidewalks, curbs and related facilities constructed by the use of state, county or municipal funds, or the funds of any political subdivision of the state.

(2) All buildings, structures and facilities that are leased, rented, contracted, sublet or hired by any municipal, county, or state division of government, or by a special district.

(3) All publicly funded living accommodations.

(4) All publicly funded buildings used for congregate residences or for one- or two-family dwelling unit purposes shall conform to the provisions applicable to living accommodations.

(5) All existing publicly funded buildings and facilities when alterations, structural repairs or additions are made to such buildings or facilities. For detailed requirements on existing buildings, see Chapter 11B, Division IV.

(6) With respect to buildings, structures, sidewalks, curbs and related facilities not requiring a building permit, building standards published in the California Building Standards Code relating to access for persons with disabilities and other regulations adopted pursuant to Government Code Section 4450, and in effect at the time construction is commenced, shall be applicable.

***B. Application.** All privately funded public accommodations, as defined, and commercial facilities, as defined, shall be accessible to persons with physical disabilities as follows:*

***NOTE:** See Health and Safety Code commencing with Section 19952.*

***EXCEPTION:** Certain types of privately funded multistory buildings do not require installation of an elevator to provide access above and below the first floor. See Title 24, Part 2.*

***NOTE:** Exceptions for multistoried buildings formerly located in this section have been moved to Title 24, Part 2.*

(1) Any building, structure, facility, complex, or improved area, or portions thereof, which are used by the general public.

(2) Any sanitary facilities which are made available for the public, clients or employees in such accommodations or facilities.

(3) Any curb or sidewalk intended for public use that is constructed in this state with private funds.

(4) All existing privately funded public accommodations when alterations, structural repairs or additions are made to such public accommodations as set forth under Chapter 11B.

C. Enforcing Agency.

(1) The director of General Services where state funds are utilized for any project or where funds of counties, municipalities or other political subdivisions are utilized for the construction of elementary, secondary or community college projects.

(2) The governing bodies where funds of counties, municipalities or other political subdivisions are utilized except as otherwise provided above.

(3) The building department of every city, county, or city and county within the territorial area of its city, county, or city and county, where private funds are utilized, "building department" means the department, bureau or officer charged with the enforcement of laws or ordinances regulating the erection or construction, or both the erection and construction, of buildings.

D. Special Conditions for Persons with Disabilities Requiring Appeals Action Ratification.
Whenever reference is made in these regulations to this section, the findings and determinations required to be rendered by the local enforcing agency shall be subject to ratification through an appeals process.

Authority Cited – *Gov. Code §4450.*

Reference – *Gov. Code §4450 through 4460, 12955.1 and H&SC §18949.1, 19952 through 19959.*

CHAPTER 2

DEFINITIONS

203.0 **-A-**

Accessibility [For DSA/AC] *– The combination of various elements in a building or area which allow access, circulation and full use of the building and facilities by the handicapped.*

214.0 **-L-**

Lavatory [For DSA/AC] – *A plumbing fixture used for washing the hands, arms, face and head.*

221.0 **-S-**

Specialty Event Centers [For DSA/AC] *– An open arena used for rallies, concerts, exhibits, etc., with no permanent structure for purpose of assembly.*

222.0 **-T-**

Toilet [For DSA/AC] *– A fixture within a toilet room which may be used for defecation or urination.*

Toilet Room [For DSA/AC] *-- A room within or on the premises containing water closets, urinals and other required facilities.*

223.0 **-U-**

U.P.C. [For DSA/AC] *– The latest edition of the Uniform Plumbing Code, published by the International Association of Plumbing and Mechanical Officials.*

225.0 **-W-**

Water Closet [For DSA/AC] *– A plumbing fixture (which may be used for both defecation or urination0 in which the waste matter is removed by flushing with water.*

CHAPTER 3

GENERAL REGULATIONS

[For DSA/AC] ***Adopt entire 2000 UPC chapter without amendments***

CHAPTER 4

PLUMBING FIXTURES AND FIXTURE FITTINGS

412.0 Floor Drains and Shower Stalls

Note: [For DSA/AC] *See Part 2, Chapters 11A and 11B for shower compartment size for accommodation of persons with disabilities.*

TABLE 4-1*
MINIMUM PLUMBING FACILITIES

Each building shall be provided with sanitary facilities, including provisions for the physically handicapped as prescribed by the Department having jurisdiction. For requirements for the handicapped, ANSI A 117 1-1992, Accessible and Usable Buildings and Facilities may be used.

Note: *ANSI A117 1-1992 is not adopted by the Sate of California. For HCD 1/AC requirements refer to the California Code of Regulations, Title 24, Part 2, Chapter 11A, California Building Code.*

EXCEPTION 1 *[For HCD 2 & HCD 1/AC] Each building shall be provided with sanitary facilities, including provisions for persons with disabilities as prescribed by the Department. Covered multi-family dwellings required to be accessible to persons with disabilities shall comply with California Code of Regulations, Title 24, Part 2, Chapter 11A. Permanent buildings in mobile home parks and special occupancy parks required to be accessible by persons with disabilities, shall comply with California Code of Regulations, Title 24, Part 2, Chapter 11B.*

EXCEPTION 2 *[For HCD 1] Minimum Plumbing Facilities; Limited Density Owner-built Rural Dwellings. For limited density owner-built rural dwellings sanitary facilities, the type design and number of facilities as required and approved by the local health official shall be provided to the dwelling sites. It shall not be required that such facilities be located within the dwelling.*

The total occupant load shall be determined by minimum exiting requirements. The minimum number of fixtures shall be calculated at fifty (50) percent male and fifty (50) percent female based on the total occupant load.

Type of Building or Occupancy[2]	Water Closets[14] (Fixtures per Person)	Urinals[5,10] (Fixtures per Person)	Lavatories (Fixtures per Person)	Bathtubs or Showers (Fixtures per Person)	Drinking Fountain[3,13] (Fixtures per Person)
Assembly Places – Theatres, Auditoriums	Male 15 Female[4]1: 1- 1: 1-15	Male 0:1-9	Male 1 per 40 Female 1 per 40		
Convention Halls, etc. - for permanent employee use	2: 16-35 3: 16-35 3: 36-55 4: 36-55 Over 55, add 1 fixture for each additional 40 persons.	1:10-50 Add one fixture for each additional 50 males.			
Assembly Places – Theaters, Auditoriums,	Male 1:1-100 Female[14] 3:1-50	Male 1:1-100	Male 1:1-200 Female 1:1-200		1: 1 – 150
Convention Halls, etc – for public use	2:101-200 3:201-400 4:51-100 8:101-200 11:201-400 Over 400, add one fixture for each additional 500 males and 1 for each additional 125 females	2:101-200 3:201-400 4:401-600 Over 600 add 1 fixture for each additional males	2:201-400 3:401-750 2:201-400 3:401-750 Over 750, add one fixture for each additional 500 persons		2: 151-400 3: 401-750 Over 750, add one fixture for each additional 500 persons
Dormitories[9] School or Labor	Male 1 per 10 Female 1 per 8	Male 1 per 25	Male 1 per 12 Female 1 per 12	1 per 8 For females, add	1 per 150[12]
	Add 1 fixture for each additional 25 males (over 10) and 1 for each additional 20 females (over 8)	Over 150, add 1 fixture for each additional 50 males.	Over 12 add one fixture for each additional 20 males and 1 for each 15 additional females	1 bathtub per 30. Over 150, add 1 per 20	
Dormitories – for staff use	Male 1:1-15 Female 1:1-15	Male 1 per 50	Male 1 per 40 Female 1 per 40	1 per 8	
Dwellings[4] – Single Dwelling	2:16-35 3:16-36 3:36-55 4:36-55 Over 55, add 1 fixture for each additional 40 persons 1 per dwelling		1 per dwelling	1 per dwelling	

* A clarifying annotation is need in Table 4-1. The annotation should state, 'For DSA/AC to carry out its statutory responsibilities, DSA/AC's application of California Plumbing Code Tables 4-1 through 4-4 are limited to those applications stated in 101.11.9.'

Type of Building or Occupancy[2]	Water Closets[14] (Fixtures per Person)	Urinals[5,10] (Fixtures per Person)	Lavatories (Fixtures per Person)	Bathtubs or Showers (Fixtures per Person)	Drinking Fountain[3,13] (Fixtures per Person)
Multiple Dwelling or Apartment House Hospital Waiting rooms	1 per dwelling or apartment unit 1 per room		1 per dwelling or apartment unit 1 per room	1 per dwelling or apartment unit	 1 per 150[12]
Hospitals- for employee use	Male Female 1::15 1:1-15	Male 0:1-9	Male Female 1 per 40 1 per 40		
Hospitals Individual Room	2:16-35 3:16-35 3:36-55 4:36-55 Over 55, add 1 fixture for each additional 40 persons 1 per room	1:10-50 Add one fixture for each additional 50 males	 1 per room	 1 per room	
Ward Room	1 per 8 patients		1 per 10 patients	1 per 20 patients	1 per 150[12]
Industrial[6] Warehouses Workshops, Foundries and similar establishments (for employee use)	Male Female 1:1-10 1:1-10 2:11-25 2:11-25 3:26-50 3:26-50 4:51-75 4:51-75 5:76-100 5:76-100 Over 100, add 1 fixture for each additional 30 persons		Up to 100, 1 per 10 persons Over, 100, 1 per 15 persons [7,8]	1 shower for each 15 persons exposed to excessive heat or to skin contamination with poisonous, infectious, or irritating material	1 per 150[12]
Institutional - Other than Hospitals or Penal Institutions (on each occupied floor)	Male Female[4] 1 per 25 1 per 20	Male 0:1-9 1:10-50 Add one fixture for each additional 50 males	Male Female 1 per 10 1 per 10	1 per 8	1 per 150[12]
Institutional - Other than Hospitals or Penal Institutions (on each occupied floor) For employee use	Male Female[14] 1:1-15 1:1-15 2:16-35 3:16-35 3:36-55 4:36-55 Over 55, add 1 fixture for each additional 40 persons	Male 0:1-9 1:10-50 Add one fixture for each additional 50 males	Male Female 1 per 40 1 per 40	1 per 8	1 per 150[12]
Office or Public Buildings	Male Female[14] 1:1-100 3:1-50 2:101-200 4:51-100 3:201-400 8:101-200 11:201-400 Over 400, add one fixture for each additional 500 males and one for each additional 150 females	Male 1:1-100 2:101-200 3:201-400 4:401-600 Over 600 add 1 fixture for each additional 300 males	Male Female 1:1-200 1:1-200 2:201-400 2:201-400 3:401-750 3:401-750 Over 750, add one fixture for each additional 500 persons		1 per 150[12]
Office or Public Buildings - For employee use	Male Female[14] 1:1-15 1:1-15 2:16-35 3:16-35 3:36-55 4:36-55 Over 55, add 1 fixture for each additional 40 persons	Male 0:1-9 1:10-50 Add one fixture for each additional 50 males	Male Female 1 per 40 1 per 40		
Penal Institutions For employee use	Male Female[14] 1:1-15 1:1-15 2:16-35 3:16-35 3:36-55 4:36-55 Over 55, add 1 fixture for each additional 40 persons	Male 0:1-9 1:10-50 Add one fixture for each additional 50 males	Male Female 1 per 40 1 per 40		1 per 150[12]
Penal Institutions For prison use Cell Exercise Room *Exercise Area*	 1 per cell 1 per room *1 per 20*	Male 1 per exercise room	 1 per cell 1 per exercise room *1 per 20*	*1 per 16*	 1 per cell block floor 1 per exercise room *Access to drinking fountain*
Agriculture Buildings *Milking Barns* *Meat and Poultry Inspections Bldgs*	*At least 1* *Male Female* *1:1-15 1:1-15* *2:16-35 2:16-35* *3:36-55 3:36-55* *4:56-80 4:56-80* *1 for each additional 30 persons in excess of 80*		*At least 1*		

Type of Building or Occupancy[2]	Water Closets[14] (Fixtures per Person)	Urinals[5,10] (Fixtures per Person)	Lavatories (Fixtures per Person)	Bathtubs or Showers (Fixtures per Person)	Drinking Fountain[3,13] (Fixtures per Person)
Schools of Cosmetology	*Male Female* **At least 1 *At least 2* ---------- **Per installation*		*At Least 1*		
Cosmetological Establishments	* At least 1 At least 1 *Per installation				
Health Facilities and Clinics *Waiting Room* *For Patient Use[12]* *For Employee Use* *Including Locker Room*	*Male Female* *1 per room* *1 per 6 patients* *1:1-15 1:1-15* *2:16-35 2:16-35* *3:36-55 3:36-55* *Over 55 add 1 fixture for each additional 40 persons*	*1 per 50*	*Males Females* *1 per 8 patients* *1 per 40 1 per 40*	*1 per 12 patients*	*1 per 75[12]* *1 per nursing unit*
Board of Corrections *Juvenile Halls*	*1 per 6*		*1 per 6*	*1 per 6*	*Access to drinking fountain*
Camp	*1 per 10*		*1 per 10*	*1 per 7*	*Access to drinking fountain*
Board of Corrections *Local Detention Facilities* *Locked Sleeping Rooms[11]*	*1 per 8* *1*		*1 per 8* *1`*	*1 per 20*	
Restaurants, Pubs and Lounges[11]	Male Female 1:1-50 1:1-50 2:51-150 2: 51-150 3:151-300 4: 151-300 Over 300 add 1 fixture for each additional 200 persons	Male 1: 1-150 Over 150, add 1 fixture for each additional 150 males	Male Female 1:1-150 1:1-150 2:151-200 2: 151-200 3:201-400 3: 201-400 Over 400 add 1 fixture for each additional 400 persons		
Schools – for staff use All schools	Male Female 1:1-15 1:1-15 2:16-35 2:16-35 3:36-55 3:36-55 Over 55 add 1 fixture for each additional 40 persons	Male 1 per 50	Male Female 1 per 40 1 per 40		
Schools – for student use Nursery Elementary Secondary Others (Colleges, Universities, Adult Centers, etc.)	Male Female 1:1-20 1:1-20 2:21-50 2:21-50 Over 50, add 1 fixture for each additional 50 persons Male Female 1 per 30 1 per 25 Male Female 1 per 40 1 per 30 Male Female 1 per 40 1 per 30	 Male 1 per 75 Male 1 per 35 Male 1 per 35	Male Female 1:1-25 1:1-25 2:26-50 2: 26-50 Over 50, add 1 fixture for each additional 50 persons Male Female 1 per 35 1 per 35 Male Female 1 per 40 1 per 40 Male Female 1 per 40 1 per 40		1 per 150[12] 1 per 150[12] 1 per 150[12] 1 per 150[12]
Worship Places Educational and Activities Unit	Male Female 1 per 150 1 per 75	Male 1 per 150	1 per 2 water closets		1 per 150[12]
Worship Places Principal Assembly Place	Male Female 1 per 150 1 per 75	Male 1 per 150	1 per 2 water closets		1 per 150[12]

1. The figures shown are based upon one (1) fixture being the minimum required for the number of persons indicated or any fraction thereof.
2. Building categories not shown on this table shall be considered separately by the Administrative Authority.
3. Drinking fountains shall not be installed in toilet rooms.
4. Laundry trays. One (1) laundry tray or one (1) automatic washer standpipe for each dwelling unit or one (1) laundry tray or one (1) automatic washer standpipe, or combination thereof, for each twelve (12) apartments. Kitchen sinks, one 91) for each dwelling or apartment unit.
5. For each urinal added in excess of the minimum required, one water closet may be deducted. The number of water closets shall not be reduced to less than two-thirds (2/3) of the minimum requirement.

6. As required by ANSI Z4.1-1986, Sanitation in Places of Employment.

7. Where there is exposure to skin contamination with poisonous, infectious, or irritating materials, provide one (1) lavatory for each five (5) persons.

8. Twenty-four (24) lineal inches (610 mm) wash sink or eighteen (18) inches (457 mm) of a circular basin, when provided with water outlets for such space, shall be considered equivalent to one(1) lavatory.

9. Laundry trays, one (1) for each fifty (50) persons. Service sinks, one (1) for each hundred (100) persons.

10. General. In applying this schedule of facilities, consideration shall be given to the accessibility of the fixtures. Conformity purely on a numerical basis may not result in an installation suited to the need of the individual establishment. For example, schools should be provided with toilet facilities on each floor having classrooms.

    a. Surrounding materials, wall and floor space to appoint two (2) feet (610 mm) in front of urinal lip and four (4) feet (1219 mm) above the floor, and at least two (2) feet (610 mm) to teach side of the urinal shall be line with non-absorbent materials.

    b. Trough urinals shall be prohibited.

11. A restaurant is defined as a business which sells food to be consumed on the premises.

    a. The number of occupants for a drive-in restaurant shall be considered as equal to the number of parking stalls..

    b. Employee toilet facilities shall not be included in the above restaurant requirements. Hand washing facilities shall be available in the kitchen for employees.

12. Where food is consumed indoors, water stations may be substituted for drinking fountains. Offices, or public buildings for use by more than six (6) persons shall have one (1) drinking fountain for the first one hundred fifty (150) persons and one (1) additional fountain for each three hundred (300) persons thereafter.

13. There shall be a minimum of one (1) drinking fountain per occupied floor in schools, theatres, auditoriums, dormitories, offices or public building.

14. The total number of water closets for females shall be at least equal to the total number of water closets and urinals required for males.

15. Fixtures need not to be located within the locked room provided a communication system or procedure is in effect to give the minor immediate access to a lavatory, toilet and drinking fountain.

16. Fixtures serving individual patient rooms shall not be considered as meeting the required rates for bedrooms not served by individual adjoining toilets or bathrooms.

TABLE 4-2*

Space	Lavatories[2]	Scrub Sinks[2]	Toilets	Tubs or Showers[3]	Service Sinks[4]	Clinic Sinks[4]
Doctors' Dressing, General	1[5]		1			
Nurses' Dressing, General	1[5]		1			
Surgery and Delivery Suite Doctors' dressing Nurses' dressing Clean–up rooms	 1[5] 1[5] 1	2[6]	 1 1	 1 Shower 1 Shower	1	
Emergency Surgery, Cystoscopy and Special Procedure Room		1 Each[7]			1	
Anesthesia Workroom	1					
Exam/Treatment Rooms	1					
Kitchen and Food Service Areas	1				1	
Labor Rooms	1		1[17]	1[17]		
Laundry, Soiled Sorting	1					
Morgue	1				1	
Negative-pressure Isolation Rooms[10]	2[10]		1[10]	1[10]		
Nurses' Stations[9]	1					
Physical Therapy	1					
Positive-pressure Isolation Rooms[10]	2[10]		1[10]	1[10]		
Postanesthesia Recovery	1					1
Radigraphic Suites	1		1[11]			
Utility Room, Clean[9]	1					
Utility Room, Soiled[9]	1					1[12]
Nursery Exam/Workrooms	1					
Nurseries; Well Newborn Intensive Care Intermediate Care	1:6 Bassinets 1:4 Bassinets 1:4 Bassinets					
Intensive Care Units[13]	1:6 Beds		1[14]			1
Coronary Care Unit	1:1 Patient Room		1[14]			1
Dialysis Units	1:8 Stations		1[14]		1	1
Central Supply and Sterilization	1[8]				1	
Laboratories	1[8]				1	
Medicine Rooms[9, 16]	1[8]					
Nursing Unit				1[15]	1	
Occupational Therapy	1[8]					
Patient Pantries	1[5]					
Pharmacy	1[8]					

* A clarifying annotation is need in Table 4-2. The annotation should state, 'For DSA/AC to carry out its statutory responsibilities, DSA/AC's application of California Plumbing Code Tables 4-1 through 4-4 are limited to those applications stated in 101.11.9.'

1. *Separate toilet facilities shall be provided for the use of patients, staff personnel and visitors.*

2. *Fixtures shall be equipped without aerators. The water discharge point shall be 127 millimeters (5 inches) above fixture rim and be equipped with hot-and cold-water supplies not requiring direct contact of the hands for operation (wrist or elbow blades are not acceptable). Sensor operated fixtures may be used, provided they are either battery operated or connected to the critical branch of the essential electrical system.*

3. *Each department shall be served by a service closet equipped with a service sink. Departments may share service closets provided the departmental services are compatible. The fixtures listed cannot be shared.*

4. *Clinic sinks shall be rim flushing with integral 3-inch (76 mm) trap in which the upper portion of a visible trap seal provides a water surface, and shall be equipped with flushometer valve and hot-and cold-water supplies.*

   Exception: *Clinic sinks are not required for chemical dependency recovery hospitals.*

5. *Conventional spouts and controls on hot-and cold-water supplies are acceptable. Aerators are not permitted.*

6. *a. A minimum of two scrub sinks shall be provided in a surgical unit containing one operating room. Four scrub sinks shall be provided in surgical units containing two operating rooms. One additional scrub sink shall be provided per each additional operating room.*

   b. A minimum of two scrub sinks shall be provided in a delivery unit containing one delivery room. One additional scrub sink shall be provided for each additional delivery room.

7. *The scrub sink is in addition to the required number for surgeries.*

8. *Conventional controls on hot-and cold-water supplies are acceptable. The water discharge points shall be 127 millimeters (5 inches) above the fixture rims and equipped without aerators.*

9. *Includes rooms or areas within coronary-and intensive-care units and postanesthesia recovery rooms.*

10. *The following fixtures shall be provided in isolation rooms of hospitals only:*

    a. Within an adjoining toilet room, a lavatory, a shower containing a seat or a space for a shower chair, and water closet equipped with bedpan flushing attachment with a vacuum breaker.

    b. A sink equipped per Note 2 within a separate anteroom.

    Exception: *Chemical dependency recovery hospitals.*

11. *A toilet room with lavatory shall adjoin each fluoroscopy room.*

12. *The clinic sink may be deleted if all bedrooms in the nursing unit are provided with adjoining toilets with bedpan flushing devices.*

    Exception: *Chemical dependency recovery hospitals are not required to provide bedpan flushing devices.*

13. *Includes burn treatment and respiratory-care units.*

14. *The water closet must be quipped for both staff and patient use if only one water closet is provided.*

15. *Minimum of one tub room per floor on nursing units providing skilled nursing or intermediate care services.*

16. *If a separate medicine room is provided, then room shall be equipped with a sink in addition to the nurses' station sink. Hot-water supplies are optional.*

17. *One toilet with lavatory and one shower may serve more than one labor room.*

18. *Chemical dependency recovery hospitals are only required to provide lavatories equipped per Note 2 for exam rooms and kitchens. All other fixtures may be equipped per Note 5.*

19. *The following fixtures shall be provided in isolation rooms of correctional treatment centers only:*

    a. Within an adjoining toilet area, a lavatory, a shower containing a seat or a space for a shower chair, and water closet equipped with bedpan flushing attachment with a vacuum breaker.

    b. A sink equipped per Note 2 within a separate anteroom.

*TABLE 4-3**

Type of Building or Occupancy[2]	*Water Closets (Fixtures per Person)*		*Urinals (Trough urinal to individual urinal equivalence)*	*Lavatories (Fixtures per Person)*	*Bathtubs or Showers (Fixtures per Person)*[7]	*Drinking Fountains (Fixtures per Person)*[3]
	Male	*Female*	*Male*			
Nonindustrial-office buildings, public buildings and similar establishments	*1 1-15* *2 16-35* *3 36-55* *4 56-80* *5 81-110* *6 111-150* *1 additional for each additional 40 employees or fraction thereof.*	*1 1-15* *2 16-35* *3 36-55* *4 56-80* *5 81-110* *6 111-150*	*Length of Trough urinal — Number of individual urinals* *24" (610 mm)……1* *36" (914 mm) ……2* *48"(1219 mm) ……2* *60" (1524 mm) ……3* *72" (1879 mm) ……4*	*1 1-15* *2 16-35* *3 36-60* *4 61-90* *5 91-125* *1 additional for each additional 4 employees or fraction thereof*	*1:10 person per shift required to shower*	_____
Industrial-factories, warehouses, loft buildings and similar establishments	*1 1-15* *2 16-35* *3 36-55* *4 56-80* *5 81-110* *6 111-150* *1 additional for each additional 40 employees or fraction thereof.*	*1 1-15* *2 16-35* *3 36-55* *4 56-80* *5 81-110* *6 111-150*	*24" (610 mm) ……1* *36" (914 mm) ……2* *48"(1219 mm) ……2* *60" (1524 mm) ……3* *72" (1879 mm) ……4*	*1 to 100 employees 1 per 10* *Over 100 employees1 additional for each additional 15 employees or fraction thereof*	*1:10 persons per shift required to shower*	_____

1 The figures shown are based on one fixture being the minimum required for the number of persons indicated or any fraction thereof.

2 Each water closet shall occupy a separate compartment which shall be equipped with a door, door latch and clothes hook. The door and the walls or partitions between fixtures shall be sufficient to assure privacy.

3 Drinking fountains shall not b located in toilet rooms.

4 Washing facilities shall be reasonably accessible to all employees.

5 Toilet facilities shall be accessible to the employees at all times. Where practicable, toilet facilities should be within 200 feet (61 m) of locations at which workers are regularly employed and should not be more than one floor-to-floor flight of stairs from working areas.

6 Urinals may be installed instead of water closets in toilet rooms to bused only by men provided that the number of water closets shall not be less than two thirds of the minimum number of toilet facilities specified. The length of trough urinals to the equivalent number of individual urinals shall be based on the above table.

7 When there are less than five employees, separate toilet rooms for each sex are not required provided toilet rooms can be locked from the inside and contain at least one water closet.

8 Twenty-four linear inches of wash sink or 18 inches of circular basin, when provided with water outlets for such space, shall be considered equivalent to one lavatory.

***Exception**: The requirements of Table C-3 do not apply to mobile crews or to normally unattended work locations provided employees at these locations have immediately available transportation to nearby toilet facilities which meet the requirements of Table C-3.*

* A clarifying annotation is need in Table 4-3. The annotation should state, 'For DSA/AC to carry out its statutory responsibilities, DSA/AC's application of California Plumbing Code Tables 4-1 through 4-4 are limited to those applications stated in 101.11.9.'

*TABLE 4–4**

Type of Building or Occupancy[2]	***Water Closets (Fixtures per Person)***	***Urinals (Fixtures per Male)***	***Lavatories (Fixtures per Person)***	***Bathtubs or Showers (Fixtures per Person***	***Drinking Fountains (Fixtures per Person)***
Day use *Public Beaches [1,2]*	*Male* *Female* *1 1-100* *1 1-100* *No sex designated* *1 1-500* *Minimum of 2*	*May be substituted for up to two-thirds of the water closets required*			
Picnic Areas	*Male* *Female* *1 :1-50* *1 1-50*				
Overnight Use *Public Beaches[2]*	*1 1-7.5 campsites[3]* *1 1-7.5 campsites[3]*	*May be substituted for up to one third of the water closets required[3]*		*1 1-12.5 campsites[4]*	
Organized Camps	*1 1-15[3]*		*1 1-15*	*1 1-156*	*Minimum 1 per Camp*

1 Toilets shall be located in accordance with actual use patterns on the beach. The reasonable intent of the toilet requirements is that it should apply on the basis of average daily use during periods of peak use. The health officer may determine how many days the population standard may be exceeded.

2 Laundry facilities are not required, but if they are provided, must be a minimum of two laundry trays or a washing machine.

3 Toilet facilities shall not be farther than 400 feet from any lot or campsite.

4 Showers are not required, but if provided, they shall be provided on the indicated ratio. Outdoor rinse-off showers may be cold water only.

5 Toilets shall be located within 300 feet from the living accommodations they serve.

6 Showers shall be provided in the living area or in a centrally located structure.

***Exception:** Intermittent short-term organized camps are not required to provide shower facilities, but if provided, they shall comply with this part.*

* A clarifying annotation is need in Table 4-4. The annotation should state, 'For DSA/AC to carry out its statutory responsibilities, DSA/AC's application of California Plumbing Code Tables 4-1 through 4-4 are limited to those applications stated in 101.11.9.'

CHAPTER 16

PLUMBING REQUIREMENTS FOR ACCOMMODATION OF PERSONS WITH PHYSICAL DISABILITIES

***1601.0 [For DSA/AC w/exceptions & note] General.**
This chapter contains building standards of the Division of State Architect/Access Compliance and the Department of Housing and Community Development applicable to all buildings and facilities required to be accessible to and usable by persons with disabilities.

***Note: [For DSA/AC]** *For description of "Multifamily Dwelling" see DSA/AC in Section 101.11.1 of this code.*

***Exceptions:**
1. [For DSA/AC] *In existing buildings, when the enforcing agency determines that compliance with any regulation under this chapter would create an unreasonable hardship, an exception shall be granted when equivalent facilitation is provided.*

2. [For DSA/AC] *In existing buildings, when the enforcing agency determines because of physical constraints compliance with this chapter or equivalent facilitation would create an unreasonable hardship, these regulations shall not apply.*

****3. [For DSA/AC]** *For accessibility requirements for Plumbing requirements for accommodation of physically handicapped persons in public accommodations commercial buildings, publicly funded owned or leased housing, see Chapter 11A and 11B, Sections **1115B.2.0 through 1115B.2.1.20.*

---

* In section 1601.0 (General) the section numbers, banner, text, Note and Exceptions 1 and 2 are pointless as the plumbing regulations were relocated to CCR, Title 24, Part 2, Section 1115B for Bathing and Toilet Facilities. Cross-reference to an Exception 3 is incorrect. In Exception 3 the cross-references to 1115B.2.0 through 1115B.2.1.20 are incorrect. All text, note and Exceptions 1 and 2 should be deleted.
** Exception 3 should be a note. Cross-references in Exception 3 should read Section 1115B. These will be submitted for correction in Rulemaking.

HISTORY NOTE APPENDIX

California Plumbing Code
(Title 24, Part 5, California Code of Regulations)

For prior history, see the History Note Appendix to the California Plumbing Code 1998 Triennial Edition Published in December 1998 and effective July 1, 1999.

1. [DSA/AC 3/01] *Adoption of the 2000 edition of the Uniform Plumbing Code of the International Association of Plumbing and Mechanical Officials (CCR, Title 24, Part 5) with necessary amendments pertaining to accessibility standard for persons with disabilities. Approved by the Building Standards Commission on November 28, 2001 and effective on November 1, 2002.*

2001 California Historical Building Code

California Code of Regulations
Title 24, Part 8

EFFECTIVE
November 1, 2002

Chapter 8-6

ALTERNATIVE ACCESSIBILITY PROVISIONS

[For DSA/AC] *See Division II, Chapter 34, Part 2, Title 24, California Code of Regulations.*

2001
California
Fire
Code

California Code of Regulations
Title 24, Part 9

Based on 2000 Uniform Fire Code

EFFECTIVE
November 1, 2002

ARTICLE 52 – MOTOR VEHICLE FUEL-DISPENSING STATIONS

SECTION 5201 – GENERAL

5201.5 Installation of Dispensing Devices.

5201.5.1 Protection of dispensers. Dispensing devices shall be protected against physical damage from vehicles by mounting on a concrete island 6 inches (152.4 mm) or more in height or by other approved methods. *[For DSA/AC and SFM] where dispensing devices are mounted at grade, they shall be protected at each end with a minimum of two concrete filled steel posts, 6 inches (152 mm) in diameter, having a minimum 3 feet (914 mm) deep footing not less than 15 inches (381 mm) in diameter and projecting above grade at a minimum of 3 feet (914 mm) and be located not less than 4 feet (1219 mm) nor more than 5 feet (1524 mm) from fuel dispensers or point-of-sale devices, or equivalent means approved by the chief.*

2001
California
Referenced
Standards
Code

California Code of Regulations
Title 24, Part 12

EFFECTIVE
November 1, 2002
(For Errata and Supplements, see History Note Appendix)

Chapters 12-11A and 12-11B
BUILDING AND FACILITY ACCESS SPECIFICATIONS

NOTE: Detectable warning products and directional surfaces installed after January 1, 2001, shall be evaluated by an independent entity, selected by the Department of General Service's, Division of the State Architect, Access Compliance for all occupancies, including transportation and other outdoor environments, except that when products and surfaces are for use in residential housing evaluation shall be in consultation with the Department of Housing and Community Development. See Government Code Section 4460.

Detectable Warnings

Secs. 12-11A.201 and 12-11B.201. "Nominal" means that premanufactured detectable warnings or devices used to create the detectable warning in place shall comply with required dimensions within ± 0.020-inch for dome height, top diameter and bottom diameter and 0.050-inch for dome spacing.

Product Approval for Detectable Warning Products and Directional Surfaces

Scope

Secs. 12-11A.202 and 12-11B.202. These requirements and test methods apply to detectable warning products and directional surfaces.

Detectable Warning Products

Secs. 12-11A.203 and 12-11B.203. Must comply with the California Code of Regulations, Title 24.

Directional Surfaces

Secs. 12-11A.204 and 12-11B.204. Must comply with the California Code of Regulations, Title 24.

Independent Entity

Secs. 12-11A.205 and 12-11B.205. Evaluation by an independent entity to confirm the prescription and performance standard of detectable warning products or direction surfaces installed after January 1, 2001. An independent entity is a not-for-profit product safety testing and certification organization, dedicated to testing for public safety. An independent entity would operate for the testing, certification and quality assessment of products, systems and services.

Two – Year Approval

Secs. 12-11A.206 and 12-11B.206. Detectable warning products and directional surfaces are to be recertified every two years without exception or waiver.

Fee

Secs. 12-11A.207 and 12-11B.207. The Division of the State Architect Access Compliance may impose a fee on manufacturer's of the specified products, to cover the cost of detectable warning products and directional surfaces.

Disability Access Account

Secs. 12-11A.208 and 12-11B.208. The fees received from manufacturers will be placed in the Disability Access Account.

Detectable Warning Products and Directional Surfaces

Secs. 12-11A.209 and 12-11B.209. Detectable Warning Products and Directional Surfaces must ensure consistency and uniformity:

a) Shape
b) Color fastness,
c) Conformation,
d) Sound-on-cane acoustic equality,
e) Resilience, and
f) Attachment will not degrade significantly for at least five years.

Significant Degradation

Secs. 12-11A.210 and 12-11B.210. Significant degradation means that the product maintains at least 90 percent of its approved design characteristics.

Selection of Independent Entity

Secs.12-11A.211 and 12-11B.211. The independent entity selected by the Division of the State Architect Access Compliance shall be recognized as having appropriate expertise in determining whether products comply with the California Code of Regulations, Title 24.

Authority: Government Code Sections 4450, 4460 and Health & Safety Code Section 18949.1.
Reference: Government Code Section 4460.

Chapter 12-35
CALIFORNIA BUILDING CODE STANDARDS

(See Part 2, Chapter 35.)

DIVISION OF THE STATE ARCHITECT

The referenced standards in Part 12, Chapter 12-35 are adopted to be consistent with the technical building standards adopted in Part 2, Chapter 35 – UNIFORM BUILDING CODE STANDARDS, for the Division of the State Architect – Access Compliance.

12-35-101 AMERICAN NATIONAL STANDARDS INSTITUTE (ANSI) 17.1-86)

12-35-102 CALIFORNIA CODE OF REGULATIONS (CCR)

12-35-103 NATIONAL FIRE PROTECTION ASSOCIATION (NFPA) 72-96 (National Fire Alarm Code)

Authority: Government Code Sections 4450 through 4460, 12955.1 and Health & Safety Code Sections 18949.1, 19952 through 19959.
Reference: Government Code Sections 4450.

HISTORY NOTE APPENDIX

CALIFORNIA REFERENCE STANDARDS CODE
(Title 24, Part 12, California Code of Regulations)

For all previous History Notes, see the 1998 Edition, Title 24, Part 12.

Chapter 12-1 ADMINISTRATION

1. (DSA/AC 05/01) Part 12, Chapter 12-1. Approved by the California Building Standards Commission on September 25, 2001, and filed with the Secretary of State on January 20, 2002. Effective November 1, 2002.

Chapter 12-11A and 12-11B BUILDING AND FACILITY ACCESS SPECIFICATIONS

1. (DSA/AC 02/01) Part 12, Chapter 12-11A and 12-11B. Approved by the California Building Standards Commission on November 28, 2001, and filed with the Secretary of State on January 30, 2002. Effective November 1, 2002.

Chapter 12-35 CALIFORNIA BUILDING CODE STANDARDS

1. (DSA/AC 01/01) Part 12, Chapter 12-35. Approved by the California Building Standards Commission on March 20 2002, and filed with the Secretary of State on April 3, 2002. Effective May 3, 2002.