FINAL EXPRESS TERMS

FOR

PROPOSED BUILDING STANDARDS

OF THE

DEPARTMENT OF HOUSING AND COMMUNITY DEVELOPMENT

REGARDING THE ADOPTION BY REFERENCE OF THE

2006 INTERNATIONAL BUILDING CODE (IBC) WITH PROPOSED AMENDMENTS INTO THE

2007 CALIFORNIA BUILDING CODE (CBC)

CALIFORNIA CODE OF REGULATIONS, TITLE 24, PART 2

The Department of Housing and Community Development (HCD) proposes to adopt the 2006 edition of the International Building Code (IBC) for codification and effectiveness into the 2007 edition of the California Building Code (CBC) as presented on the following pages, including any necessary amendments. HCD further proposes to:

- Repeal the 2001 edition of the California Building Code;
- Repeal amendments to the model codes that are no longer necessary, repeal or amend building standards that are not addressed by a model code;
- Relocate or codify existing adopted and necessary amendments to the model code into the format of the model code proposed for adoption, the action of which has no regulatory effect; adopt new necessary amendments to the model code proposed for adoption; and/or
- Adopt new building standards that are not addressed by the model code proposed for adoption

---

LEGEND FOR EXPRESS TERMS:

1. **Existing California amendments or code language being modified: All such language appears in *italics*, modified language is <u>underlined</u> or in ~~strikeout~~.**

2. **New California amendments: All such language appears *<u>underlined and in italics</u>*.**

3. **Repealed text: All such language appears in ~~strikeout.~~**

4. **Amended, adopted or repealed language after public hearing: All such language appears in <u>double underline</u> or ~~double strikeout~~.**

5. **Non-substantive editorial revisions: All such revisions are shown in yellow highlight and *italics.* Modified language is <u>underlined</u> or in ~~strikeout~~.**

6. **Notation: Authority and Reference citations are provided at the end of each chapter.**

<u>SPECIAL NOTE:</u> THIS DOCUMENT IS A COMPILATION OF THE FOLLOWING ITEMS:

1: <u>STRUCTURAL STANDARDS</u> [Chapters 5 - 7, 9, 14 - 23]

2: <u>NON-STRUCTURAL STANDARDS</u> [Chapters 1 – 4, 8, 10, 12, 13, 24 – 35 and Appendix Chapter 1, Appendices A – D, F – K]

3: <u>ACCESSIBILITY STANDARDS</u> [Chapter 11A]

The items listed above, created for use during the Code Advisory Committee (CAC) meetings, were initially divided into separate documents for ease of use, but instead ended up causing confusion. As a result of public comments received during the CAC meetings and in an effort to provide the most complete information for public comment, the items have been merged into one document.

REPEALED AMENDMENTS:

*(Section 101.2, Purpose, 2001 CBC)**HCD 1 & HCD 2 & HCD 1/AC]** The purpose of this Code is to establish the minimum requirements necessary to safeguard the public health, safety and general welfare through structural strength, means of egress facilities, stability, sanitation, accessibility, use and occupancy, adequate light and ventilation, energy conservation and safety to life and property from fire and other hazards attributed to the built environment.*

*(Section 101.4.1, Effective Date, 2001 CBC) **[For HCD 1 & HCD 2] Section 17958**. Except as provided in Sections 17958.8 and 17958.9, any city or county may make changes in the provisions adopted pursuant to Section 17922 and published in the California Building Standards Code or the other regulations thereafter adopted pursuant to Section 17922 to amend, add, or repeal ordinances or regulations which impose the same requirements as are contained in the provisions adopted pursuant to Section 17922 and published in the California Building Standards Code or the other regulations adopted pursuant to Section 17922 or make changes or modifications in those requirements upon express findings pursuant to Sections 17958.5 and 17958.7. If any city or county does not amend, add, or repeal ordinances or regulations to impose those requirements or make changes or modifications in those requirements upon express findings, the provisions published in the California Building Standards Code or the other regulations promulgated pursuant to Section 17922 shall be applicable to it and shall become effective 180 days after publication by the California Building Standards Commission. Amendments, additions, and deletions to the California Building Standards Code adopted by a city or county pursuant to Section 17958.7, together with all applicable portions of the California Building Standards Code, shall become effective 180 days after publication of the California Building Standards Code by the California Building Standards Commission.*

***101.11 [For HCD 1 & HCD 2] For** clarification purposes, the applicable subsection of the Health and Safety Code Section is repeated here for clarity and reads as follows:*

***Section 18941.5.** Amendments, additions and deletions to the California Building Standards Code adopted by a city, county or city and county pursuant to Section 18941.5, together with all applicable portions of the California Building Standards Code, shall become effective 180 days after publication of the California Building Standards Code by the commission or at a later date after publication established by the commission.*

(b)Neither the California Building Standards Law contained in this part, nor the application of building standards contained in this Section, shall limit the authority of a city, county or city and county to establish more restrictive building standards reasonably necessary because of local climatic, geological or topographical conditions. The governing body shall make the finding required by Section 17958.7 and the other requirements imposed by Section 17958.7 shall apply to that finding. Nothing in this Section shall limit the authority of fire protection districts pursuant to subdivision (a) of Section 13869.7. Further, nothing in this Section shall require findings required by Section 17958.8 beyond those currently required for more restrictive building standards related to housing.

***101.12 [For HCD 1 & HCD 2] Local Variances.** For clarification purposes, the applicable Sections of the Health and Safety Code are repeated here for clarity and read as follows:*

***Section 17958.5.** Except as provided in Section 17922.6, in adopting the ordinances or regulations pursuant to Section 17958, a city or county may make such changes or modifications in the requirements contained in the provisions published in the California Building Standards Code and the other regulations adopted pursuant to Section 17922 as it determines, pursuant to the provisions of Section 17958.7, are reasonably necessary because of local climatic, geological or topographical conditions.*

For purposes of this subdivision, a city and county may make reasonably necessary modifications to the requirements, adopted pursuant to Section 17922, contained in the provisions of the Code and regulations on the basis of local conditions.

***Section 17958.5 (b).** Neither the California Building Standards Law contained in this part, nor the application of building standards contained in this Section, shall limit the authority of a city, county or city and county to establish more restrictive building standards reasonably necessary because of local climatic, geological, or topographical conditions. The governing body shall make the finding required by Section 17958.7 and the other requirements imposed by Section 17958.7 shall apply to that finding. Nothing in this Section shall limit the authority of fire protection districts pursuant to subdivision (a) of Section 13869.7.*

~~*Further, nothing in this Section shall require findings required by Section 17958.7 beyond those currently required for more restrictive building standards related to housing.*~~

~~***101.13 [ForHCD1&HCD2, SFM] Annual Report.*** *For clarification purposes, the applicable subsection of the Health and Safety Code Section is repeated.*~~

~~***Section 17958.5*** *Except as provided in Section 17922.6, in adopting the ordinances or regulations pursuant to Section 17958, a city or county may make such changes or modifications in the requirements contained in the provisions published in the California Building Standards Code and the other regulations adopted pursuant to Section 17922, as it determines, pursuant to the provisions of Section 17958.7, are reasonable necessary be cause of local climatic, geological, or topographical conditions.*~~

~~*For purposes of this subdivision, a city or county may make reasonably necessary modification to the requirements, adopted pursuant to Section 17922, contained in the provisions of the Code and regulations on the basis of local conditions*~~

~~***101.14 [For HCD 1 & HCD 2] Findings, Filings and Rejections of Local Variances.*** *For clarification purposes, the applicable Section of the Health and Safety Code is repeated here for clarity and reads as follows:*~~

~~***Section 17958.7.*** *(a) Except as provided in Section 17922.6, the governing body of a city or county, before making any modifications or changes pursuant to Section 17958.5, shall make an express finding that such modifications or changes are reasonably necessary because of local climatic, geological or topographical conditions. Such a finding shall be available as a public record. A copy of those findings, together with the modification or change expressly marked and identified to which each finding refers, shall be filed with the California Building Standards Commission. No modification or change shall become effective or operative for any purpose until the finding and the modification or change have been filed with the California Building Standards Commission.*~~

~~*(b) The California Building Standards Commission may reject a modification or change filed by the governing body of a city or county if no finding was submitted.*~~

~~***101.17 Application.***~~
~~***Vesting Authority.*** *When adopted by a state agency, the provisions of this Code shall be enforced by the appropriate enforcing agency, but only to the extent of authority granted to such agency by the state legislature.*~~
~~*Following is a list of the state agencies that adopt building standards, the specific scope of application of the agency responsible for enforcement, and the specific statutory authority of each agency to adopt and enforce such provisions of building standards of this Code, unless otherwise stated.*~~

~~***101.17.9 [For HCD 1] Department of Housing and Community Development.*** *Application - Hotels, motels, lodging houses, apartment houses, dwellings, dormitories, condominiums, shelters for homeless persons, congregate residences, employee housing and factory-built housing and other types of dwellings containing sleeping accommodations with common toilet or cooking facilities. Reference 101.17.14 SFM for fire and panic safety.*~~

~~***101.17.9.1 [For HCD 1/AC] Department of Housing and Community Development.*** *Application- Multifamily dwelling units - including but not limited to lodging houses, dormitories, time-shares, condominiums, shelters for homeless persons, congregate residences, apartment houses, dwellings, employee housing, factory-built housing and other types of dwellings containing sleeping accommodations with common toilet or cooking facilities which are not subject to DSA/AC.*~~

~~*When the identification "HCD 1/AC" appears in this Code, it shall mean the following provision by the California Department of Housing and Community Development requires specific accommodations for persons with physical disabilities, as defined in Chapter 11A, of the California Code of Regulations, Title 24, Part 2, also known as the California Building Code. The application of such provisions shall apply only to Group R Occupancies which are newly-constructed covered multifamily dwellings as defined in Chapter 11A of the California Building Code, including, but not limited to, the following:*~~

~~*1. All newly-constructed covered multifamily dwellings as defined in Chapter 11A.*~~

~~*2. New common use areas as defined in Chapter 11A serving existing covered multifamily dwellings.*~~

~~*3. Additions to existing buildings, where the addition alone meets the definition of a covered multifamily dwelling as defined in Chapter 11A.*~~

~~*These building standards generally do not apply to public accommodations such as hotels and motels. Public use areas, public accommodations, and housing which is publicly funded as defined in Chapter 2, Chapter 11A, and Chapter 11B of this Code are subject to the Division of the State Architect (DSA/AC) and are referenced in Section 109.1.*~~

~~***101.17.10 [HCD 2] Department of Housing and Community Development.*** *Application - Permanent buildings, and permanent accessory buildings or structures, constructed within mobilehome parks and special occupancy parks that are under the control and ownership of the park operator.*~~

~~***102.2 [For HCD 1] Authority to Enforce.*** *Subject to other provisions of law, for administration, enforcement, actions, proceedings, abatement, violations and penalties in structures subject to State Housing Law, refer to Health and Safety Code Sections 17910 through 17995.5 and California Code of Regulations, Title 25, Division 1, Chapter 1, commencing with Section 1.*~~

~~***102.2.1 [For HCD 2].*** *Subject to other provisions of law, for administrative, enforcement, actions, proceedings, abatement, inspections and penalties applicable to the Mobilehome Parks Act, refer to Health and Safety Code, commencing with Section 18200 and California Code of Regulations, Title 25, Division 1, Chapter 2,commencing with Section 1000.*~~

~~***NOTE:*** *See Section 101.17.10.*~~

~~***102.2.2 [For HCD 1].*** *Subject to other provisions of law, for administration, enforcement, actions, proceedings, violations and penalties applicable to the Employee Housing Act, refer to Health and Safety Code Sections 17000 through 17062.5 and California Code of Regulations, Title 25, Division 1, Chapter 1, commencing with Section 600.*~~

~~***103.2 [For HCD 1] Actions and Proceedings.*** *Subject to other provisions of law, California Code of Regulations, Title 25, Division 1, Chapter 1 commencing with Section 1 and Health and Safety Code Sections 17980 through 17995.5 address punishments, penalties and fines for violations of building standards in structures subject to State Housing Law.*~~

~~***103.2.1 [For HCD 2] Actions and proceedings.*** *Subject to other provisions of law, California Code of Regulations, Title 25 Division 1, Chapter 2 commencing with Section 1000 and Health and Safety Code Section 18700, addresses punishments, penalties and fines for violations of building standards subject to the Mobilehome Parks Act.*~~

~~***103.2.2 [For HCD 1] Actions and proceedings.*** *Subject to other provisions of law, California Code of Regulations, Title 25, Division 1, Chapter 1 commencing with Section 600 and Health and Safety Code Sections 17060 through 17062.5 address punishments, penalties and fines for violations of building standards subject to the Employee Housing Act.*~~

~~***104.1.1.4 [For HCD 1] General - Factory Built Housing.*** *Refer to the Factory Built Housing Law, California Health and Safety Code, Division 13, Part 6 commencing with Section 19960 and the California Code of Regulations, Title 25, Division 1, Chapter 3 commencing with Section 3000 for factory-built housing administrative and enforcement authority, permits, fees, violations, inspections and penalties.*~~
~~***NOTE: [For HCD 1]*** *See Section 102.1.*~~

~~***104.2.1.1[For HCD 1] - Authority of City or County Building Departments.***~~

~~***104.2.1.1.2 [For HCD 2] General-Mobilehome Parks Act.*** *Refer to the Mobilehome Parks Act, California Health and Safety Code, Division 13, Part 2.1, Article 1, commencing with Section 18200 and California Code of Regulations, Title 25, Division 1, Chapter 2, commencing with Section 1000 for mobilehome park administrative and enforcement authority, permits, plans, fees, violations, inspections and penalties.*~~
~~***NOTE: [For HCD 2]:*** *See Section 101.17.10.*~~

~~***104.2.1.1.3 [For HCD 1] General-Employee Housing Act.*** *Refer to the Employee Housing Act, California Health and Safety Code, Division 13, Part 1, commencing with Section 17000 and California Code of Regulations, Title 25, Division 1, Chapter 1 commencing with Section 600 for employee housing administrative and enforcement authority, permits, fees, violations, inspections and penalties.*~~
~~***NOTE: [For HCD 1]:*** *See Section 101.17.9.*~~

~~***106.4.2.1 [For HCD 1] Retention of Plans.***~~
~~**NOTE:** *Reference Building Standards Law, Health and Safety Code Sections 19850 and 19851, for provisions related to permanent retention of plans.*~~

~~***104.2.3.1 [For HCD 1 & HCD 2] Right of entry for enforcement.*** *Subject to other provisions of law, Health and Safety Code Sections and Subsections 17050 (i), 17970, 17971, 17972 and 18400 are repeated below for clarity and read as follows.*~~

~~***Section 17050 (i).*** *The enforcement agency may:*~~

~~*(1) Enter public or private properties to determine whether there exists any employee housing to which this part applies.*~~

~~*(2) Enter and inspect all employee housing wheresoever situated, and inspect all accommodations, equipment, or paraphernalia connected therewith.*~~

~~*(3) Enter and inspect the land adjacent to the employee housing to determine whether the sanitary and other requirements of this part, the building standards published in the State Building Standards Code relating to employee housing, and the other rules and regulations adopted pursuant to this part have been or are being complied with.*~~

~~***Section 17970.*** *Any officer, employee, or agent of an enforcement agency may enter and inspect any building or premises whenever necessary to secure compliance with, or prevent a violation of, any provision of this part, the building standards published in the State Building Standards Code, and other rules and regulations promulgated pursuant to the provisions of this part which the enforcement agency has the power to enforce.*~~

~~***Section 17971.*** *The owner, or authorized agent of any owner, of any building or premises may enter the building or premises whenever necessary to carry out any instructions, or perform any work required to be done pursuant to this part, the building standards published in the State Building Standards Code, and other rules and regulations promulgated pursuant to the provisions of this part.*~~

~~***Section 17972.*** *No person authorized by this article to enter buildings shall enter any dwelling between the hours of 6 o'clock p.m. of any day and 8 o'clock a.m. of the succeeding day, without the consent of the owner or of the occupants of the dwelling, nor enter any dwelling in the absence of the occupants without a proper written order executed and issued by a court having jurisdiction to issue the order.*~~

~~***Section 18400.*** *(a) The department shall enforce this part and the rules and regulations adopted pursuant to this part, except as provided in Section 18300.*~~

~~*(b) The officers or agents of the enforcement agency may do either of the following:*~~

~~*(1) Enter public or private property to determine whether there exists any park to which this part applies.*~~

~~*(2) Enter and inspect all parks, wherever situated, and inspect all accommodations, equipment, or paraphernalia used in connection therewith, including the right to examine any registers of occupants maintained therein in order to secure the enforcement of this part and the regulations adopted pursuant to this part.*~~

~~***104.2.8 [For HCD 1 & HCD 2] Alternate for materials, design, tests and methods of construction***~~

~~***104.2.8.1 [For HCD 1] Alternate for materials, designs, tests and methods of construction.*** *Subject to other provisions of law, the method for approval of alternate materials, design, tests and methods of construction are set forth in State Housing Law, Health and Safety Code Section 17923 or Section 17951 (d) and California Code of Regulations, Title 25, Division 1, Chapter 1 commencing with Section 1.*~~

~~***104.2.8.1.1 [For HCD 2] Alternate for materials, designs, tests and methods of construction.*** *Subject to other provisions of law, the method for approval of alternate materials, appliances, installation, device, arrangement, or method of construction are set forth in the Mobilehome Parks Act, Health and Safety Code Section 18305 and California Code of Regulations, Title 25, Division 1, Chapter 2 commencing with Section 1000.*~~

~~***104.2.8.1.2 [For HCD 1] Alternate for materials, designs, tests and methods of construction.*** *Subject to other provisions of law, the method for approval of alternate materials, appliances, installation, device, arrangement, or method of construction are set forth in the Employee Housing Act, Health and Safety Code Section 17002 and California Code of Regulations, Title 25, Division 1, Chapter 1 commencing with Section 600.*~~

~~***107.1.1 [For HCD 1] General*** *Subject to of laws, reference State Housing Law, Health and Safety Code, Division 13, Part 1.5, Section 17951 and California Code of Regulations, Title 25, Division 1, Chapter 1 commencing with Section 1 for the local enforcement agency's authority to prescribe fees.*~~

~~***107.1.2 [For HCD 1] Plan Review and Time Limitations.*** *Subject to other provisions of law, provisions related to plan checking, prohibition of excessive delays, and contracting with or employment of private parties to perform plan checking are set forth in State Housing Law, Health and Safety Code Section 17960.1, and for employee housing, Health and Safety Code Sections 17021 and 17055.*~~

~~***108.1.1 [For HCD 1] Excavation and grading.*** *Subject to other provisions of law, reference Health and Safety Code, Sections 17953, 17954, 17955, and California Code of Regulations, Title 25, Division 1, Chapter 1 commencing with Section 1 and Title 24, Part 2, Appendix Chapter 33, Excavation and Grading commencing with Section 3304.*~~

~~**108.5.1** ***[For HCD 1]*** **Required Inspections.** The *enforcing agency*, upon notification, shall make the inspections *prescribed by* Sections *108.5.2, 108.5.3, 108.5.4, 108.5.5, 108.5.6, and 108.6.*~~

~~**105.5.2** ***[For HCD 1]*** **Foundation inspection.** *Inspection shall* be made after excavations for footings *is* complete and any required reinforcing steel is in place. For concrete foundations, any required forms shall be in place prior to inspection. All materials for the foundation shall be on the job *site; however,* where concrete is ready mixed in accordance with approved nationally recognized standards, the concrete need not be on the job *site*. Where the foundation is to be constructed of approved treated wood, additional inspections may be required by the building official.~~

~~**108.5.3** ***[For HCD 1]*** **Concrete slab or under-floor inspection.** *Inspection shall* be made after all in-slab or under-floor *reinforcing steel* building service equipment, conduit, piping accessories and other ancillary equipment items are *installed*, but before any concrete is placed or floor sheathing installed, including the subfloor.~~

~~**108.5.4** ***[For HCD 1]*** **Frame inspection.** *Inspection shall* be made after the roof, *roof deck or sheathing,* all framing, fire blocking and bracing are in place and all *conduits, plumbing* pipes, chimneys and vents *to be concealed* are complete and the rough electrical, plumbing, and heating wires, *conduits, plumbing* pipes and ducts are approved.~~

~~**108.5.5** ***[For HCD 1]*** ***Lath or gypsum board inspection.*** *Inspection shall* be made after all lathing and gypsum board, interior and exterior, *are* in place, but before any plastering is applied or before gypsum board joints and fasteners are taped and finished.~~

~~**108.5.6** ***[For HCD 1]*** Final inspection. *Inspection shall* be made after finish grading and the building is completed and ready for occupancy.~~

~~***310.1 [For HCD] Group R Occupancies Defined***~~

~~***Division 3.*** Dwellings and those dwellings *used for large family day-care homes (as defined in Chapter 2, Section 205)* and lodging houses. *Licensing categories that may use this classification include, but are not limited to: Adult Day-care Facilities, Family Day-care Homes, Adult Day-support Center.*~~

~~Congregate residences (each accommodating 10 persons or less).~~

~~For occupancy separations, see Table 3-B.~~
~~A complete Code for construction of detached one- and two-family dwellings is in Appendix Chapter 3, Division III, of this Code. When adopted, as set forth in Section 101.3, it will take precedence over the other requirements set forth in this Code.~~

~~***310.14 [For HCD 1] Existing Group R, Division 1 Occupancies.*** *In accordance with Health and Safety Code Section 13143.2, the provisions of Sections 310.14.3 through 310.14.11 shall only apply to multistory structures existing on January 1, 1975, let for human habitation, including, and limited to, apartments, houses, hotels and motels wherein in which rooms used for sleeping are let above the ground floor.*~~

~~***Exception: [For HCD 1]*** *Any portion of an existing residential structure may be altered, repaired or rehabilitated, regardless of the value of the work or the duration of the construction period, without the entire structure being made to comply with the requirements of this chapter for new construction.*~~

~~***Notes: [For HCD 1]*** *1. See Sections 17958.8 and 17958.9 of the Health and Safety Code for regulations governing the alteration and repair of existing and relocated buildings.*~~

~~*2. See Section 17920.3 of the Health and Safety Code for conditions that constitute a substandard building.*~~

~~***310.14.1 [For HCD 1] Limited-density owner-built rural dwellings.*** *The provisions regulating the erection and construction of dwellings and appurtenant structures shall not apply to existing structures as to which construction is commenced or approved prior to the effective date of these regulations. Requirements relating to use, maintenance and occupancy shall apply to all dwellings and appurtenant structures approved for construction or constructed before or after the effective date of this chapter.*~~

~~**1003.2.2.2.2 Areas without fixed seats.** For areas without fixed seats, the occupant load ***[for HCD 1 & HCD 2]*** *permitted in any building or portion thereof* shall not be less than the number determined by dividing the floor area under consideration by the ***[for HCD1&HCD2]*** *square feet per* occupant load factor assigned to the use for such area as set forth in Table 10-A.~~

~~***[For HCD 1 & HCD 2]*** *When the square feet per occupant is not given for a particular occupancy, it shall be determined by the enforcing agency based on the area given for the occupancy which it most nearly resembles.*~~

~~**1003.3.1 Doors.**~~
~~***[For HCD 1 & HCD 2] Egress from door.*** *Every exit door required by this Section shall give immediate access to an approved means of egress from the building.*~~

~~***1003.3.1.2.1 [For HCD 2] Doors in folding partitions.*** *When permanently mounted folding or movable partitions are used to divide a room into smaller spaces, exits from these enclosures shall be provided as required under Section 1003.*~~

~~*(Heading located prior to Section 1003.3.1.6.1, 2001 CBC)* The following California Sections replace the corresponding model code Section for applications specified by law for the Department of Housing and Community Development and the Division of the State Architect/Access Compliance.~~

~~***1003.3.1.6.2 [For HCD 1 w/exceptions 1, 2 & 3] Level floor or landing.*** *There shall be a level and clear area on each side of an exit door and 44 inches (1118 mm) where the door swings away from the level and clear area. The level area shall have a length of at least 60 inches (1524 mm) in the direction of door swing as measured at right angles to the plane of the door in its closed.*~~

~~***EXCEPTIONS:***~~

~~*1. In Group R, Division 3 Occupancies and within individual units of Group R, Division 1 Occupancies, a door may open on the top step of a flight of stairs or an exterior landing, provided the door does not swing over the top step or exterior landing and the landing is not more than 71/2 inches (190 mm) below the floor level.*~~

~~*2. In Group R, Division 3 Occupancies, screen doors and storm doors may swing over stairs or steps.*~~

~~*3. In Group R, Division 3 Occupancies and private garages and sheds where a door opens over a landing, the landing shall have a length equal to the width of the door.*~~

~~**1003.3.1.8 Type of lock or latch.** Regardless of the occupant load served, exit doors shall be openable from the inside without the use of a key or any special knowledge or effort.~~

> ~~**EXCEPTIONS:** 1. In Groups A, Division 3; B; F; M and S Occupancies and in all churches, key locking hardware may be used on the main exit where the main exit consists of a single door or pair of doors where there is a readily visible, durable sign on or adjacent to the door stating, THIS DOOR MUST REMAIN UNLOCKED DURING BUSINESS HOURS. *THIS DOOR TO REMAIN UN LOCKED WHENEVER THE BUILDING IS OCCUPIED.* The sign shall be in letters not less than 1 inch (25 mm) high on a contrasting background. When unlocked, the single door or both leaves of a pair of doors must be free to swing without operation of any latching device.~~
> ~~The use of this exception may be revoked by the building official ***[for HCD 1 & HCD 2]*** *enforcing agency* for due cause~~…

~~***3401.1 [For HCD 1 & HCD 1/AC] Scope.*** *The provisions and statutes of Section 104.2.8.2 shall control moved buildings and the maintenance, alteration, repair, addition or change of occupancy to existing Group R occupancies, or buildings and structures accessory thereto as provided in Section 101.17.9.*~~

NOTE:
Authority cited: Health and Safety Code Sections 17040, 17921, 17922, 18300, 18865 and 19990; and Government Code Sections 12955.1 and 12955.1.1.
Reference: Health and Safety Code Sections 17000 through 17060, 17910 through 17990, 18620, 18630, 18640, 18670, 18690, 18691, 18873 through 18873.5 and 19960 through 19997; and Government Code Sections 12955.1 and 12955.1.1.

AMENDMENTS:

CALIFORNIA CHAPTER 1*

*** [NOTE: Chapter 1, §101, was provided by the California Building Standards Commission (CBSC)]**

GENERAL CODE PROVISIONS

SECTION 101
GENERAL

101.1 Title. *These regulations shall be known as the California Building Code, may be cited as such and will be referred to herein as "this code." The California Building Code is part 2 of eleven parts of the official compilation and publication of the adoptions, amendment, and repeal of building regulations to the California Code of Regulations, Title 24, also referred to as the California Building Standards Code. This part incorporates by adoption the 2006 International Building Code of the International Code Council with necessary California amendments.*

101.2 Purpose *The purpose of this code is to establish the minimum requirements to safeguard the public health, safety and general welfare through structural strength, means of egress facilities, stability, access to persons with disabilities, sanitation, adequate lighting and ventilation, energy conservation, safety to life and property from fire and other hazards attributed to the built environment and to provide safety to fire fighters and emergency responders during emergency operations.*

101.3 Scope. *The provisions of this code shall apply to the construction, alteration, movement, enlargement, replacement, repair, equipment, use and occupancy, location, maintenance, removal and demolition of every building or structure or any appurtenances connected or attached to such buildings or structures throughout the State of California.*

> ***101.3.1 Non-State Regulated Buildings, Structures, and Applications.*** *The provisions in Chapters 2 through 34 of the 2006 International Building Code of the International Code Council contained or referenced in this code shall apply to all occupancies and applications not regulated by a state agency,*
>
> > ***Exception:*** *Local modifications complying with Health and Safety Code Section 18938 (b) for Building Standards Law and Section 17950 for State Housing Law. See Section 101.7.*

101.3.2 State Regulated Buildings, Structures, and Applications. *The model code provisions, and amendments to them, and/or provisions where there are no relevant model code provisions shall apply to the following buildings or structures regulated by state agencies as referenced in the Matrix Adoption Tables and as specified in Sections 102 through 113. When adopted by a state agency, the provisions of this code shall be enforced by the appropriate enforcing agency, but only to the extent of authority granted to such agency by the State Legislature.*

Note: See Legend to distinguish the model code provisions from the California provisions.

1. State owned buildings including buildings constructed by the Trustees of the California State University, and to the extent permitted by California laws, buildings designed and constructed by the Regents of the University of California regulated by the Building Standards Commission. See Section 102 for additional scope provisions.

2. Local detention facilities regulated by the Board of Corrections. See Section 103 for additional scope provisions.

3. Barber shops, schools of cosmetology and electrology, acupuncture offices, pharmacies, veterinary facilities, structural pest controls regulated by the Department of Consumer Affairs. See Section 104 for additional scope provisions.

4. Energy efficiency standards regulated by the California Energy Commission. See Section 105 for additional scope provisions.

5. Dairies and places of meat inspection regulated by the Department of Food and Agriculture. See Section 106 …

6. Organized camps, laboratory animal quarters, public swimming pools, radiation protection, commissaries serving mobile food preparation vehicles, and wild animal quarantine facilities regulated by the Department of Health Services. See Section 107 ….

7. Hotels, motels, lodging houses, apartment houses, dwellings, dormitories, condominiums, shelters for homeless persons, congregate residences, employee housing, factory-built housing, other types of dwellings containing sleeping accommodations with common toilets or cooking facilities. See Section 108.2.1.1.

8. Accommodations for persons with disabilities in buildings containing newly constructed covered multifamily dwellings, new common use spaces serving existing covered multifamily dwellings, additions to existing buildings where the addition alone meets the definition of a covered multifamily dwelling, and common-use spaces serving covered multifamily dwellings which are regulated by Department of Housing and Community Development. See Section 108.2.1.2.

9. Permanent buildings and permanent accessory buildings or structures constructed within mobile home parks and special occupancy parks regulated by the Department of Housing and Community Development. See Section 108.2.1.3.

10. Public accommodations for persons with disabilities regulated by the Division of the State Architect. See Section 109.1 for additional scope provisions.

11. Public elementary and secondary schools, community college buildings, and state-owned or state-leased essential service buildings regulated by the Division of the State Architect. See Section 109.2 for additional scope provisions

12. Qualified historical buildings and structures and their associated sites regulated by the State Historical Building Code Advisory Board with the Division of the State Architect. See Section 109.3 for additional scope provisions.

13. General acute care hospitals, acute psychiatric hospitals, skilled nursing and/or intermediate care facilities, clinics licensed by the Department of Health Services, and correctional treatment centers regulated by the Office of Statewide Health Planning and Development. See Section 108 for additional scope provisions.

14. Any building or structure used or intended for use as an asylum, jail, mental hospital, hospital, home for the elderly, children's nursery, children's home or institution , school or any similar occupancy of any capacity, any theater, dancehall, skating rink, auditorium, assembly hall, meeting hall, nightclub, fair building. or similar place of assemblage where 50 or more persons may gather together in a building, room or structure for the purpose of amusement, entertainment, instruction, deliberation, worship, drinking or dining, awaiting transportation, or education, small family day-care homes, large family day-care homes, residential facilities and residential facilities for the elderly, any state institution or other state-owned or state-occupied buildings, high rise structures, motion picture production studios, organized camps , hotels, motels, lodging houses, apartment houses, dwellings regulated by the Office of State Fire Marshal. See Section 111 for additional scope provisions.

15. Public libraries constructed and renovated using funds from the California Library Construction and Renovation Act of 1988 regulated by the State Librarian. See Section 112 for additional scope provisions.

16. Grey water systems regulated by the Department of Water Resources. See Section 113 for additional scope provisions.

101.4 Appendices. *Provisions contained in the appendices of this code shall not apply unless specifically adopted by a state agency or adopted by a local enforcing agency in compliance with Health and Safety Code Section 18938(b) for Building Standards Law and Health and Safety Code Section 17950 for State Housing Law. See Section 101.7.*

101.5 *(Relocated from 2001 CBC 101.7)* ***Referenced Codes.*** *The codes, standards and publications adopted and set forth in this code, including other codes, standards and publications referred to therein are, by title and date of publication, hereby adopted as standard referenced documents of this code. When this code does not specifically cover any subject related to building design and construction, recognized engineering practices shall be employed.*

101.6 *(Relocated from 2001 CBC 101.8)* ***Non-Building Standards, Orders and Regulations.*** *Requirements contained in the International Building Code, or in any other referenced standard, code or document, which are not building standards as defined in Section 18909, Health and Safety Code, shall not be construed as part of the provisions of this code. For non-building standards, orders, and regulations, see other titles of the California Code of Regulations.*

101.7 *(Relocated from 2001 CBC 101.9)* ***Order of Precedence and Use.***

101.7.1 *(Relocated from 2001 CBC 101.9.1)* ***General.*** *In the event of any differences between these building standards and the standard reference documents, the text of these building standards shall govern. Where a specific provision varies from a general provision, the specific provisions shall apply.*

101.8 City, County or City and County Amendments, Additions or Deletions.
The provisions of this code do not limit the authority of city, county or city and county governments from establishing more restrictive reasonably necessary differences to the provisions contained in this code pursuant to complying with Section 101.8.1. The effective date of amendments, additions, or deletions to this code, cities, counties, or city and counties file pursuant to Section 101.8.1 shall be the date filed. However, in no case shall the amendments, additions or deletions to this code be effective any sooner than the effective date of this code.

101.8.1 Findings and Filings.

1. *The city, county or city and county shall make express finding for each amendment, addition or deletion based upon climatic, topographical, or geological conditions.*

   Exception: Hazardous building ordinances and programs mitigating unreinforced masonry buildings.

2. *The city, county or city and county shall file the amendments, additions, deletions expressly marked and identified as to the applicable findings. City, county, city and county, and fire departments shall file the amendments, additions or deletions, and the findings with the California Building Standards Commission at 2525 Natomas Park Drive, Suite 130, Sacramento, CA 95833.*

3. *Findings prepared by fire protection districts shall be ratified by the local city, county or city and county and filed with the California Department of Housing and Community Development at 1800 3rd Street, Room 260, Sacramento, CA 95814.*

101.9 *(Relocated from 2001 CBC 101.4)* ***Effective Date of this Code****. Only those standards approved by the California Building Standards Commission and that are effective at the time an application for building permit is submitted shall apply to the plans and specifications for, and to the construction performed under, that permit. For the effective dates of the provisions contained in this code, see the History Note page of this code.*

101.10 Availability of Codes. *At least one copy of the entire Title 24, 8, 19, 20, and 25 with all revisions shall be maintained in the office of the building official responsible for the administration and enforcement of this code. See Health and Safety Code Section 18942 (d)(1) & (2).*

101.11 Format. *This part fundamentally adopts the International Building Code by reference on a chapter-by-chapter basis. Such adoption is reflected in the Matrix Adoption Table of each chapter of this part. When the Matrix Adoption Tables make no reference to a specific chapter of the International Building Code, such chapter of the International Building Code is not adopted as a portion of this code.*

101.12 Validity. *If any chapter, section, subsection, sentence, clause or phrase of this code is for any reason held to be unconstitutional, contrary to statute, exceeding the authority of the state as stipulated by statutes, or otherwise inoperative, such decision shall not affect the validity of the remaining portion of this code.*

SECTION 108
DEPARTMENT OF HOUSING AND COMMUNITY DEVELOPMENT (HCD)

108.1 Purpose. *The purpose of this code is to establish the minimum requirements necessary to protect the health, safety and general welfare of the occupant and the public by governing accessibility, erection, construction, enlargement, conversion, alteration, repair, moving, removal, demolition, occupancy, use, height, court, area, sanitation, ventilation, maintenance, safety to life and property from fire and other hazards attributed to the built environment.*

SECTION 108.2
AUTHORITY AND ABBREVIATIONS

108.2.1 General. *The Department of Housing and Community Development is authorized by law to promulgate and adopt building standards and regulations for several types of building applications. These applications are grouped and identified by abbreviation in the Matrix Adoption Tables to show which model code sections and amendments are applicable to each application. The applications under the authority of the Department of Housing and Community Development are listed in Sections 108.2.1.1 through 108.2.1.3.*

108.2.1.1 Housing Construction. *Application –Hotels, motels, lodging houses, apartment houses, dwellings, dormitories, condominiums, shelters for homeless persons, congregate residences, employee housing, factory-built housing and other types of dwellings containing sleeping accommodations with or without common toilet or cooking facilities including accessory buildings, facilities, and uses thereto. Sections of this code which pertain to applications listed in this section are identified in the Matrix Adoption Table using the abbreviation "HCD 1".*

Enforcing Agency–Local building department or the Department of Housing and Community Development.

Authority cited–Health and Safety Code Sections 17921, 17922 and 19990.
Reference–Health and Safety Code Sections 17000 through 17060, 17910 through 17990, and 19960 through 19997.

108.2.1.2 Housing Accessibility. *Application – Covered multifamily dwelling units as defined in Chapter 11A including, but not limited to, lodging houses, dormitories, time-shares, condominiums, shelters for homeless persons, congregate residences, apartment houses, dwellings, employee housing, factory-built housing and other types of dwellings containing sleeping accommodations with or without common toilet or cooking facilities.*

Sections of this code identified in the Matrix Adoption Table by the abbreviation "HCD 1/AC" require specific accommodations for persons with physical disabilities, as defined in Chapter 11A. The application of such provisions shall be in conjunction with other requirements of this code and apply only

to Group R Occupancies which are newly constructed covered multifamily dwellings as defined in Chapter 11A of the California Building Code. "HCD 1/AC" applications include, but are not limited to, the following:

1. All newly constructed covered multifamily dwellings as defined in Chapter 11A.

2. New common use areas as defined in Chapter 11A serving existing covered multifamily dwellings.

3. Additions to existing buildings, where the addition alone meets the definition of a covered multifamily dwelling as defined in Chapter 11A.

4. Common use areas serving covered multifamily dwellings.

HCD 1A/C building standards generally do not apply to public use areas or public accommodations such as hotels and motels. Public use areas, public accommodations, and housing which is publicly funded as defined in Chapter 2, Chapter 11A, and Chapter 11B of this code are subject to the Division of the State Architect (DSA/AC) and are referenced in Section 109.1.

Enforcing Agency–Local building department or the Department of Housing and Community Development.

Authority cited–Health and Safety Code Sections 17921, 17922, 19990 and Government Code Section 12955.1.
Reference–Health and Safety Code Sections 17000 through 17060, 17910 through 17990, 19960 through 19997 and Government Code Section 12955.1.

108.2.1.3 Permanent Buildings in Mobilehome Parks and Special Occupancy Parks. *Application – Permanent buildings, and permanent accessory buildings or structures, constructed within mobilehome parks and special occupancy parks that are under the control and ownership of the park operator. Sections of this code which pertain to applications listed in this section are identified in the Matrix Adoption Table using the abbreviation "HCD 2".*

Enforcing Agency–Local building department or other local agency responsible for the enforcement of Health and Safety Code Division 13, Part 2.1 commencing with Section 18200 for Mobilehome Parks and Health and Safety Code Division 13, Part 2.3 commencing with Section 18860 for Special Occupancy Parks or the Department of Housing and Community Development.

Authority cited: Health and Safety Code Sections 18300 and 18865.
Reference: Health and Safety Code Sections 18200 through 18700 and 18860 through 18874.

SECTION 108.3
LOCAL ENFORCING AGENCY

108.3.1 Duties and Powers. *The building department of every city, county or city and county shall enforce all the provisions of law, this code, and the other rules and regulations promulgated by the Department of Housing and Community Development pertaining to the installation, erection, reconstruction, movement, enlargement, conversion, alteration, repair, removal, demolition, or arrangement of apartment houses, hotels, and dwellings, including accessory buildings, facilities, and uses thereto.*

The provisions regulating the erection and construction of dwellings and appurtenant structures shall not apply to existing structures as to which construction is commenced or approved prior to the effective date of these regulations. Requirements relating to use, maintenance and occupancy shall apply to all dwellings and appurtenant structures approved for construction or constructed before or after the effective date of this code.

108.3.2 Laws, Rules, and Regulations. *Other than the building standards contained in this code, and notwithstanding other provisions of law, the statutory authority and location of the laws, rules, and regulations to be enforced by local enforcing agencies are listed by statute in Sections 108.3.2.1 through 108.3.2.5 below:*

108.3.2.1 State Housing Law. *Refer to the State Housing Law, California Health and Safety Code, Division 13, Part 1.5 commencing with Section 17910, and California Code of Regulations, Title 25, Division 1, Chapter 1, Subchapter 1, Article 1, commencing with Section 1, for the erection, reconstruction, movement, enlargement, conversion, alteration, repair, removal, demolition, or arrangement of apartment houses, hotels, and dwellings, including accessory buildings, facilities, and uses thereto.*

108.3.2.2 Mobilehome Parks Act. *Refer to the Mobilehome Parks Act, California Health and Safety Code, Division 13, Part 2.1, Article 1, commencing with Section 18200 and California Code of Regulations, Title 25, Division 1, Chapter 2, commencing with Section 1000 for mobilehome park administrative and enforcement authority, permits, plans, fees, violations, inspections and penalties both within and outside mobilehome parks.*

Exception: *Mobilehome parks where the Department of Housing and Community Development is the enforcing agency.*

108.3.2.3 Special Occupancy Parks Act. *Refer to the Special Occupancy Parks Act, California Health and Safety Code, Division 13, Part 2.3, commencing with Section 18860 and California Code of Regulations, Title 25, Division 1, Chapter 2.2, Article 1, commencing with Section 2000 for special occupancy park administrative and enforcement authority, permits, fees, violations, inspections and penalties both within and outside of special occupancy parks.*

Exception: *Special occupancy parks where the Department of Housing and Community Development is the enforcing agency.*

108.3.2.4 Employee Housing Act. *Refer to the Employee Housing Act, California Health and Safety Code, Division 13, Part 1, commencing with Section 17000 and California Code of Regulations, Title 25, Division 1, Chapter 1, Subchapter 3, Article 1, commencing with Section 600 for employee housing administrative and enforcement authority, permits, fees, violations, inspections and penalties.*

108.3.2.5 Factory–Built Housing. *Refer to the Factory-Built Housing Law, California Health and Safety Code, Division 13, Part 6 commencing with Section 19960 and California Code of Regulations, Title 25, Division 1, Chapter 3, Subchapter 1, Article 1, commencing with Section 3000 for factory-built housing administrative and enforcement authority, permits, fees, violations, inspections and penalties.*

SECTION 108.4
PERMITS, FEES, APPLICATIONS AND INSPECTIONS

108.4.1 Permits. *A written construction permit shall be obtained from the enforcing agency prior to the erection, construction, reconstruction, installation, moving, or alteration of any building or structure.*

Exceptions:

1. Work exempt from permits as specified in Appendix Chapter 1, Section 105.2.

2. Changes, alterations, or repairs of a minor nature not affecting structural features, egress, sanitation, safety or accessibility as determined by the enforcing agency.

Exemptions from permit requirements shall not be deemed to grant authorization for any work to be done in any manner in violation of other provisions of law or this code.

108.4.2 Fees. *Subject to other provisions of law, the governing body of any city, county or city and county may prescribe fees to defray the cost of enforcement of rules and regulations promulgated by the Department of Housing and Community Development. The amount of the fees shall not exceed the amount reasonably necessary to administer or process permits, certificates, forms, or other documents, or to defray the costs of enforcement. For additional information, see State Housing Law, Health and Safety Code, Division 13, Part 1.5, Section 17951 and California Code of Regulations, Title 25, Division 1, Chapter 1, Subchapter 1, Article 3, commencing with Section 6.*

108.4.3 Plan Review and Time Limitations. *Subject to other provisions of law, provisions related to plan checking, prohibition of excessive delays, and contracting with or employment of private parties to perform plan checking are set forth in State Housing Law, Health and Safety Code Section 17960.1, and for employee housing, in Health and Safety Code Section 17021.*

108.4.3.1 Retention of Plans. *The building department of every city, county or city and county shall maintain an official copy, microfilm, electronic or other type of photographic copy of the plans of every building, during the life of the building, for which the department issued a building permit.*

Exceptions:

1. Single or multiple dwellings not more than two stories and basement in height.

2. Garages and other structures appurtenant to buildings listed in exception (1).

3. Farm or ranch buildings appurtenant to buildings listed in exception (1).

4. Any one-story building where the span between bearing walls does not exceed 25 feet, except a steel frame or concrete building.

All plans for common interest developments as defined in Section 1351 of the California Civil Code shall be retained. For additional information regarding plan retention and reproduction of plans by an enforcing agency, see Health and Safety Code Sections 19850 and 19851.

108.4.4 Inspections. *Construction or work for which a permit is required shall be subject to inspection by the building official and such construction or work shall remain accessible and exposed for inspection purposes until approved. Approval as a result of an inspection shall not be construed to be an approval of a violation of the provisions of this code or other regulations of the Department of Housing and Community Development. Required inspections are listed in Appendix Chapter 1, Sections 109.3.1 through 109.3.6, 109.3.8, 109.3.9 and 109.3.10.*

SECTION 108.5
RIGHT OF ENTRY FOR ENFORCEMENT

108.5.1 General. *Subject to other provisions of law, officers and agents of the enforcing agency may enter and inspect public and private properties to secure compliance with the rules and regulations promulgated by the Department of Housing and Community Development. For limitations and additional information regarding enforcement, see the following:*

1. For applications subject to State Housing Law as referenced in Section 108.3.2.1 of this code, refer to Health and Safety Code Sections 17970 through 17972 and California Code of Regulations, Title 25, Division 1, Chapter 1, Subchapter 1.

2. For applications subject to the Mobilehome Parks Act as referenced in Section 108.3.2.2 of this code, refer to the Health and Safety Code, commencing with Section 18200 and California Code of Regulations, Title 25, Division 1, Chapter 2.

3. For applications subject to the Special Occupancy Parks Act as referenced in Section 108.3.2.3 of this Code, refer to the Health and Safety Code, commencing with Section 18860 and California Code of Regulations, Title 25, Division 1, Chapter 2.2.

4. For applications subject to the Employee Housing Act as referenced in Section 108.3.2.4 of this code, refer to Health and Safety Code Section 17052 and California Code of Regulations, Title 25, Division 1, Chapter 1, Subchapter 3.

5. For applications subject to the Factory-Built Housing Act as referenced in Section 108.3.2.5 of this code, refer to Health and Safety Code Sections 19960 through 19997 and California Code of Regulations, Title 25, Division 1, Chapter 3, Subchapter 1.

SECTION 108.6
LOCAL MODIFICATION BY ORDINANCE OR REGULATION

108.6.1 General. *Subject to other provisions of law, a city, county or city and county may make changes to the provisions adopted by the Department of Housing and Community Development. If any city, county or city and county does not amend, add, or repeal by local ordinances or regulations the provisions published in this code or other regulations promulgated by the Department of Housing and Community Development, those provisions shall be applicable and shall become effective 180 days after publication by the California Building Standards Commission. Amendments, additions, and deletions to this code adopted by a city, county or city and county pursuant to California Health and Safety Code Sections 17958.7 and 18941.5, together with all applicable portions of this code, shall also become effective 180 days after publication of the California Building Standards Code by the California Building Standards Commission.*

108.6.2 Findings, Filings, and Rejections of Local Modifications. *Prior to making any modifications or establishing more restrictive building standards, the governing body shall make express findings and filings, as required by California Health and Safety Code Section 17958.7, showing that such modifications are reasonably necessary due to local climatic, geological, or topographical conditions. No modification shall become effective or operative unless the following requirements are met:*

1. The express findings shall be made available as a public record.

2. A copy of the modification and express finding, each document marked to cross-reference the other, shall be filed with the California Building Standards Commission for cities, counties, or cites and counties, and with the Department of Housing and Community Development for fire protection districts.

3.The California Building Standards Commission has not rejected the modification or change.

Nothing in this section shall limit the authority of fire protection districts pursuant to California Health and Safety Code Section 13869.7(a).

SECTION 108.7
ALTERNATE MATERIALS, DESIGNS, TESTS AND METHODS OF CONSTRUCTION

108.7.1 General. *The provisions of this code as adopted by the Department of Housing and Community Development are not intended to prevent the use of any alternate material, appliance, installation, device, arrangement, method, design or method of construction not specifically prescribed by this code. Consideration and approval of alternates shall comply with Section 108.7.2 for local building departments and Section 108.7.3 for the Department of Housing and Community Development.*

108.7.2 Local Building Departments. *The building department of any city, county or city and county may approve alternates for use in the erection, reconstruction, movement, enlargement, conversion, alteration, repair, removal or demolition of an apartment house, hotel, motel, dwelling, or an accessory structure, except for the following:*

1. Structures located in mobilehome parks as defined in California Health and Safety Code Section 18214.

2. Structures located in special occupancy parks as defined in California Health and Safety Code Section 18862.43.

3. Factory-built housing as defined in California Health and Safety Code Section 19971.

108.7.2.1 Approval of Alternates. *The consideration and approval of alternates by a local building department shall comply with the following procedures and limitations:*

1. The approval shall be granted on a case-by-case basis.

2. Evidence shall be submitted to substantiate claims that the proposed alternate, in performance, safety, and protection of life and health, conforms to, or is at least equivalent to, the standards contained in this code and other rules and regulations promulgated by the Department of Housing and Community Development.

3. The building department may require tests performed by an approved testing agency at the expense of the owner or owner's agent as proof of compliance.

4. If the proposed alternate is related to accessibility in covered multifamily dwellings or in facilities serving covered multifamily dwellings as defined in Chapter 11A, the proposed alternate must also meet the threshold set for "EQUIVALENT FACILITATION" as defined in Chapter 11A.

For additional information regarding approval of alternates by a building department pursuant to the State Housing Law, see California Health and Safety Code Section 17951(e) and California Code of Regulations, Title 25, Division 1, Chapter 1 , Subchapter 1.

***108.7.3 Department of Housing and Community Development**. The Department of Housing and Community Development may approve alternates for use in the erection, reconstruction, movement, enlargement, conversion, alteration, repair, removal or demolition of an apartment house, hotel, motel, dwelling, or an accessory thereto. The consideration and approval of alternates shall comply with the following:*

1. The department may require tests at the expense of the owner or owner's agent to substantiate compliance with the California Building Standards Code.

2. The approved alternate shall, for its intended purpose, be at least equivalent in performance and safety to the materials, designs, tests, or methods of construction prescribed by this code.

SECTION 108.8
APPEALS BOARD

***108.8.1 General.** Every city, county or city and county shall establish a local appeals board and a housing appeals board. The local appeals board and housing appeals board shall each be comprised of at least five voting members that shall serve at the pleasure of the city, county or city and county. Appointments shall not be employees of the jurisdiction and shall consist of members who are qualified and specifically knowledgeable in the California Building Standards Codes and applicable local ordinances.*

***108.8.2 Definitions.** The following terms shall for the purposes of this section have the meaning shown.*

***Housing Appeals Board.** The board or agency of a city, county or city and county which is authorized by the governing body of the city, county or city and county to hear appeals regarding the requirements of the city, county or city and county relating to the use, maintenance, and change of occupancy of buildings and structures, including requirements governing alteration, additions, repair, demolition, and moving. In any area in which there is no such board or agency, "housing appeals board" means the local appeals board having jurisdiction over the area.*

***Local Appeals Board.** The board or agency of a city, county or city and county which is authorized by the governing body of the city, county or city and county to hear appeals regarding the building requirements of the city, county or city and county. In any area in which there is no such board or agency, "local appeals board" means the governing body of the city, county or city and county having jurisdiction over the area.*

***108.8.3 Appeals.** Except as otherwise provided in law, any person, firm, or corporation adversely affected by a decision, order, or determination by a city, county or city and county relating to the application of building standards published in the California Building Standards Code, or any other applicable rule or regulation adopted by the Department of Housing and Community Development, or any lawfully enacted ordinance by a city, county or city and county, may appeal the issue for resolution to the local appeals board or housing appeals board as appropriate.*

The local appeals board shall hear appeals relating to new building construction and the housing appeals board shall hear appeals relating to existing buildings.

SECTION 108.9
UNSAFE BUILDINGS OR STRUCTURES

108.9.1 Authority to Enforce. *Subject to other provisions of law, the administration, enforcement, actions, proceedings, abatement, violations and penalties for unsafe buildings and structures are contained in the following statutes and regulations:*

1. For applications subject to State Housing Law as referenced in Section 108.3.2.1 of this code, refer to Health and Safety Code Sections 17910 through 17995.5 and California Code of Regulations, Title 25, Division 1, Chapter 1, Subchapter 1.

2. For applications subject to the Mobilehome Parks Act as referenced in Section 108.3.2.2 of this code, refer to the Health and Safety Code, commencing with Section 18200, and California Code of Regulations, Title 25, Division 1, Chapter 2.

3. For applications subject to the Special Occupancy Parks Act as referenced in Section 108.3.2.3 of this code, refer to the Health and Safety Code, commencing with Section 18860, and California Code of Regulations, Title 25, Division 1, Chapter 2.2.

4. For applications subject to the Employee Housing Act as referenced in Section 108.3.2.4 of this code, refer to Health and Safety Code Sections 17000 through 17062.5 and California Code of Regulations, Title 25, Division 1, Chapter 1, Subchapter 3.

5. For applications subject to the Factory-Built Housing Act as referenced in Section 108.3.2.5 of this code, refer to Health and Safety Code Sections 19960 through 19997 and California Code of Regulations, Title 25, Division 1, Chapter 3, Subchapter 1.

108.9.2 Actions and Proceedings. *Subject to other provisions of law, punishments, penalties and fines for violations of building standards are contained in the following statutes and regulations:*

1. For applications subject to State Housing Law as referenced in Section 108.3.2.1 of this code, refer to and Health and Safety Code Sections 17980 through 17995.5 and California Code of Regulations, Title 25, Division 1, Chapter 1, Subchapter 1.

2. For applications subject to the Mobilehome Parks Act as referenced in Section 108.3.2.2 of this code, refer to the Health and Safety Code Sections 18200 through 18700 and California Code of Regulations, Title 25 Division 1, Chapter 2.

3. For applications subject to the Special Occupancy Parks Act as referenced in Section 108.3.2.3 of this code, refer to the Health and Safety Code Sections 18866 through 18869 and California Code of Regulations, Title 25, Division 1, Chapter 2.2.

4. For applications subject to the Employee Housing Act as referenced in Section 108.3.2.4 of this code, refer to Health and Safety Code Sections 17060 through 17062.5 and California Code of Regulations, Title 25, Division 1, Chapter 1, Subchapter 3.

5. For applications subject to the Factory-Built Housing Act as referenced in Section 108.3.2.5 of this code, refer to Health and Safety Code Sections 19995 through 19997 and California Code of Regulations, Title 25, Division 1, Chapter 3, Subchapter 1.

SECTION 108.10
OTHER BUILDING REGULATIONS

108.10.1 Existing Structures. *Subject to the requirements of California Health and Safety Code Sections 17912, 17920.3, 17922(c), 17922.3, 17958.8 and 17958.9, the provisions contained in Chapter 34 relating to existing structures shall only apply as identified in the Matrix Adoption Table under the authority of the Department of Housing and Community Development as listed in Sections 108.2.1.1 through 108.2.1.3 of this code.*

108.10.2 Moved Structures. *Subject to the requirements of California Health and Safety Code Sections 17922.3 and 17958.9, the provisions contained in Chapter 34 relating to a moved residential structure shall only*

apply as identified in the Matrix Adoption Table under the authority of the Department of Housing and Community Development as listed in Sections 108.2.1.1 through 108.2.1.3 of this code.

NOTE:
Authority cited: Health and Safety Code Sections 17040, 17921, 17922, 18300, 18865 and 19990; and Government Code Sections 12955.1 and 12955.1.1.
Reference: Health and Safety Code Sections 17000 through 17060, 17910 through 17990, 18620, 18630, 18640, 18670, 18690, 18691, 18873 through 18873.5 and 19960 through 19997; and Government Code Sections 12955.1 and 12955.1.1.

CHAPTER 2
DEFINITIONS

(Note: Adopt only those sections listed in the Matrix Adoption Table.)

Section 201

201.3 Terms Defined in Other Codes. Where terms are not defined in this code and are defined in the ~~*International Fuel Gas Code,*~~ ~~*International*~~ *California Fire Code*, ~~*International*~~ *California Mechanical Code* or ~~*International*~~ *California Plumbing Code,* such terms shall have the meanings ascribed to them as in those codes.

Section 202

~~***ACCESSIBLE. [For HCD 1/AC]*** *See Chapter 11A, Section 1107A.1-A.*~~

ACCESSIBLE. ~~See Section 1102.1~~ ~~*For applications listed in Section 108.2.1.2 regulated by the Department of Housing and Community Development, s*~~ *See Chapter 11A, Section 1107A.1-A and Chapter 11B, Section 1102B.*

ACCESSIBILTY. ~~***[For HCD 1/AC]*** *See Chapter 11A, Section 1107.1-A*~~ ~~*For applications listed in Section 108.2.1.2 regulated by the Department of Housing and Community Development, s*~~ *See Chapter 11A, Section 1107A.1-A and Chapter 11B, Section 1102B.*

~~***ACCESSIBLE ROUTE OF TRAVEL. [For HCD 1/AC]*** *See Chapter 11A, Section 1107A.1-A.*~~

ACCESSIBLE ROUTE. ~~See Section 1102.1~~. ~~*For applications listed in Section 108.2.1.2 regulated by the Department of Housing and Community Development, s*~~ *See Chapter 11A, Section 1107A.1-A.*

~~**ACCESSIBLE UNIT**. See Section 1102.~~

~~***[For HCD 1 & HCD 2]*** **ACI** is the American Concrete Institute, P.O. Box 9094, Farmington Hills, Michigan 48333.~~

ADAPTABLE DWELLING UNIT. ~~***[For HCD 1/AC]*** *See Chapter 11A, Section 1107A.1-A*~~ ~~*For applications listed in Section 108.2.1.2 regulated by the Department of Housing and Community Development, s*~~ *See Chapter 11A, Section 1107A.1-A.*

~~***[ForHCD1&HCD2]*** **AISC** is the American Institute of Steel Construction, Inc., One East Wacker Drive, Suite 3100, Chicago, Illinois 60601-2001.~~

APPROVED. Acceptable to the code official or authority having jurisdiction.

> ~~***Exception:*** ***[For HCD 1 & HCD 2]*** *For applications listed in Section 108.2 regulated by the Department of Housing and Community Development,*~~ *"Approved" means meeting the approval of the* ~~*enforcement*~~ *enforcing agency, except as otherwise provided by* ~~*statute*~~ *law, when used in connection with any system, material, type of construction, fixture or appliance as the result of investigations and tests conducted by the agency, or by reason of accepted principles or tests by national authorities or technical, health, or scientific organizations or agencies.*
>
> ***Notes****:-1. See Health and Safety Code Section 17920 for "Approved" as applied to residential construction and buildings or structures accessory thereto, as referenced in Section* ~~*101.17.9*~~ *108.2.1.1.*

2. See Health and Safety Code Section 17921.1 for "Approved" as applied to the use of hotplates in residential construction referenced in Section ~~101.17.9~~ 108.2.1.1.

3. See Health and Safety Code Section 17921.3 for "Approved" as applied to low-flush water closets in residential construction, as referenced in Section ~~101.17.9~~ 108.2.1.1.

4. See Health and Safety Code Section 19966 for "Approved" as applied to factory-built housing as referenced in Section ~~101.1.17.9~~ 108.3.2.5.

5. See Health and Safety Code Section 18201 for "Approved" as applied to mobilehome parks as referenced in Section 108.2.

6. See Health and Safety Code Section 18862.1 for "Approved" as applied to special occupancy parks as referenced in Section 108.2.

~~[For HCD 1 & HCD 2]~~ APPROVED LISTING AGENCY. [HCD 1 & HCD 2] ~~For applications listed in Section 108.2 regulated by the Department of Housing and Community Development,~~ "Approved Listing Agency" is any agency approved by the ~~enforcement~~ enforcing agency, unless otherwise provided by statute, which is in the business of listing and labeling and which makes available at least an annual published report of such listings in which specific information is included that the product has been tested to recognized standards and found to comply.

~~[HCD 1 & HCD 2]~~ APPROVED TESTING AGENCY. [HCD 1 & HCD 2] ~~For applications listed in Section 108.2 regulated by the Department of Housing and Community Development,~~ "Approved Testing Agency" is any agency which is determined by the ~~enforcement~~ enforcing agency, except as otherwise provided by statute, to have adequate personnel and expertise to carry out the testing of systems, materials, and construction fixtures or appliances.

ASSISTIVE DEVICE. ~~[HCD 1/AC]~~ See Chapter 11A, Section 1107A.1-A ~~For applications listed in Section 108.2.1.2 regulated by the Department of Housing and Community Development, s~~ See Chapter 11A, Section 1107A.1-A.

~~[For HCD 1 & HCD 2] ATTIC STORY~~ ~~is any story immediately below the roof and wholly or partly within the roof framing, designed, arranged or built for business or storage use.~~

AUTOMATIC DOOR. ~~[For HCD 1/AC]~~ See Chapter 11A, Section 1107.A.1-A and Chapter 11B, Section 1102B ~~Definitions as applicable~~.

BATHROOM. ~~[For HCD 1/AC]~~ See Chapter 11A, Section 1107A.2-B ~~For applications listed in Section 108.2.1.2 regulated by the Department of Housing and Community Development, s~~ See Chapter 11A, Section 1107A.2-B.

~~[For HCD 1 & HCD 2]~~ BUILDING. ~~is any structure *as to which state agencies have regulatory power,* used or intended for supporting or sheltering any use or occupancy, *housing or enclosure of persons, animals, chattels, equipment or property of any kind, and also includes structures wherein things may be grown, made, produced, kept, handled, stored or disposed of, and all appendages, accessories, apparatus, appliances and equipment installed as a part thereof.*~~

~~*Building. shall not include machinery, equipment or appliances installed for manufacture or process purposes only, nor shall it include any construction installations which are not a part of a building, any tunnel, mine shaft, highway or bridge, or include any house trailer or vehicle which conforms to the Vehicle Code.*~~

~~***Note:*** *Building shall have the same meaning as defined in Health and Safety Code Section 17920 and 18908 for the applications specified in Section 101.17.9 and 101.17.10.*~~

BUILDING. Any structure used or intended for supporting or sheltering any use or occupancy.

Exceptions: *For applications listed in Section 108.2 regulated by the Department of Housing and Community Development, "Building" shall not include the following:*

1. Any mobilehome as defined in Health and Safety Code Section 18008.

2. Any manufactured home as defined in Health and Safety Code Section 18007.

3. Any commercial modular as defined in Health and Safety Code Section 18001.8 or any special purpose commercial modular as defined in Section 18012.5.

4. Any recreational vehicle as defined in Section Health and Safety Code 18010.

5. Any multi-unit manufactured housing as defined in Section Health and Safety Code 18008.7.

For additional information, see Health and Safety Code Section 18908.

BUILDING ENTRANCE ON AN ACCESSIBLE ROUTE. ***~~[For HCD 1/AC]~~*** *~~See Chapter 11A, Section 1107A.2-B~~* ***~~For applications listed in Section 108.2.1.2 regulated by the Department of Housing and Community Development, s~~*** *See Chapter 11A, Section 1107A.2-B.*

~~[For HCD 1 & HCD 2]~~ ***BUILDING, EXISTING*** ***[HCD 1 & HCD 2]*** *"Building, Existing" is a building erected prior to the adoption of this code, or one for which a legal building permit has been issued.*

~~[For HCD 1 & HCD 2]~~ **BUILDING OFFICIAL.** The officer or other designated authority charged with the administration and enforcement of this code, or a duly authorized representative.

~~[For HCD 1 & HCD 2] C.C.R.~~ *~~means the California Code of Regulations.~~*

~~[For HCD 1 & HCD 2]~~ ***CELLULAR CONCRETE.*** ***[HCD 1 & HCD 2]*** *~~For applications listed in Section 108.2.1.1 regulated by the Department of Housing and Community Development,~~ "Cellular Concrete" is a lightweight product consisting of portland cement and selected gas-forming chemicals or foaming agents which create homogeneous voids in the hardened concrete.*

CIRCULATION PATH. ~~See Section 1102.1~~ *~~An exterior or interior way of passage from one place to another for pedestrians, including, but not limited to, walks, hallways, courtyards, stairways and stair landings.~~ See Chapter 11B, Section 1102B.*

~~[For HCD 1 & HCD 2] C.F.R.~~ *~~is the Code of Federal Regulations, a regulation of the United States of America available from the Superintendent of Documents, United States Government Printing Office, Washington, DC 20402-9325.~~*

~~[For HCD 2] COMMERCE~~ *~~is travel, trade, traffic, commerce, transportation, or communication (1) within the state; (2) among several states; (3) between any foreign country or any territory or possession and any state; or (4) between points in the same state, but through another state or foreign country.~~*

~~[ForHCD2] COMMERCIALFACILITIES~~ *~~are facilities that are intended for nonresidential use and whose operations will affect commerce, including factories, warehouses, office buildings, and other buildings in which employment may occur. Commercial facilities shall not include railroad locomotives, railroad freight cars, railroad cabooses, railroad cars covered under Title III of the Americans with Disabilities Act of 1990, or facilities that are covered or expressly exempted from coverage under the Fair Housing Amendment Act of 1988 (42 USC 3601-3631, et seq.)~~*

COMMON USE AREAS. ***~~[For HCD 1/AC]~~*** *~~See Chapter 11A, Section 1107A.3-C~~* *~~For applications listed in Section 108.2.1.2 regulated by the Department of Housing and Community Development, s~~ See Chapter 11A, Section 1107A.3-C.*

~~[For HCD 1] COMMUNITY KITCHEN~~ *~~is a separate room or building in an employee housing used or intended to be used by the occupants of the employee housing or cooking or preparing their own meals.~~*

CONCRETE, CELLULAR. See Section 721.1.1. ~~*For applications listed in Section 108.2.1.1 regulated by the Department of Housing and Community Development, see*~~ ***[HCD 1]*** *See" Cellular Concrete".*

COVERED MULTIFAMILY DWELLINGS. [HCD 1/AC] *See Chapter 11A, Section 1107A.3-C* ~~*For applications listed in Section 108.2.1.2 regulated by the Department of Housing and Community Development, see Chapter 11A, Section 1107A.3-C*~~.

CROSS SLOPE. [~~For~~ HCD 1/AC] *See Chapter 11A, Section 1107A.3-C and Chapter 11B, Section 1102B* ~~*Definitions as applicable*~~.

CURB CUT. [~~For~~ HCD 1/AC] *See Chapter 11A, Section 1107A.3-C and Chapter 11B, Section 1102B* ~~*Definitions as applicable*~~.

CURB RAMP. [~~For~~ HCD 1/AC] *See Chapter 11A, Section, 110~~2~~ 7A.3-C and Chapter 11B, Section 1102B* ~~*Definitions as applicable*~~.

DEPARTMENT [~~For~~ HCD 1 & HCD 2] ~~*For applications listed in Section 108.2.1.1 regulated by the Department of Housing and Community Development,*~~ *"Department" is the Department of Housing and Community Development.*

~~***[For HCD 1 & HCD 2] DETACHED BEDROOM*** *is a separate accessory structure, without kitchen or sanitary facilities, designed for and intended to be used as a sleeping or living facility for one family, to be employed in conjunction with a main structure(s), which includes kitchen and sanitation facilities.*~~

~~***[For HCD 1 & HCD 2]***~~ ***DETACHED SINGLE-FAMILY DWELLING. [HCD 1 & HCD 2]*** *"Detached Single - Family Dwelling" is any single-family dwelling which is separated from adjacent property lines by 3 feet (914 mm) or more or is separated from adjacent buildings by 6 feet (1829 mm) or more.*

~~***DETECTABLE WARNING. [For HCD 1/AC]*** *See Chapter 11A, Section, 1107A.4-D.*~~

DETECTABLE WARNING. ~~See Section 1102.1~~ *See Chapter 11A, Section 1107A.4-D and Chapter 11B, Section 1102B* ~~*Definitions as applicable*~~.

~~***[For HCD 1 & HCD 2]***~~ ***DIRECTIONAL SIGN. [HCD 1 & HCD 2]*** ~~*For applications listed in Section 108.2.1.2 regulated by the Department of Housing and Community Development,*~~ *"Directional Sign" is a publicly displayed notice which indicates by use of words or symbols a recommended direction or route of travel.*

~~***[For HCD 1/AC] DORMITORY*** *is a room occupied by more than two persons.*~~

DWELLING UNIT. A single unit providing complete, independent living facilities for one or more persons, including permanent provisions for living, sleeping, eating, cooking and sanitation. ~~*For applications listed in Section 108.2.1.2 regulated by the Department of Housing and Community Development*~~ *(Section 205-D, 2001 CBC),* ***[HCD 1/AC]*** *See Chapter 11A, Section 1107A4-D.*

~~***DWELLING UNIT OR SLEEPING UNIT, MULTISTORY.*** *See Section 1102.*~~

~~***DWELLING UNIT OR SLEEPING UNIT, TYPE A.*** *See Section 1102.*~~

~~***DWELLING UNIT OR SLEEPING UNIT, TYPE B.*** *See Section 1102.*~~

~~***[For HCD 1]***~~ ***(Section 206-E, 2001 CBC) EFFICIENCY DWELLING UNIT [HCD 1] "Efficiency Dwelling Unit"*** *is a dwelling unit containing only one habitable room and includes an efficiency unit as defined by Health and Safety Code Section 17958.1. See Section 1208.4.*

~~[For HCD 1 & HCD 2]~~ ENFORCEMENT. [HCD 1 & HCD 2] *~~For applications listed in Sections 108.2.1.1 and 108.2.1.3 regulated by the Department of Housing and Community Development and notwithstanding other provisions of law, t~~ The applicable section of the Health and Safety Code is repeated here for clarity and reads as follows:*

Section 17920*. "Enforcement" means diligent effort to secure compliance, including review of plans and permit applications, response to complaints, citation of violations, and other legal process. Except as otherwise provided in this part, "enforcement" may, but need not, include inspections of existing buildings on which no complaint or permit application has been filed, and effort to secure compliance as to these existing buildings.*

~~[For HCD 1 & HCD 2]~~ ENFORCING AGENCY. [HCD 1 & HCD 2] *~~For applications listed in Sections 108.2.1.1and 108.2.1.3 regulated by the Department of Housing and Community Development,~~ "Enforcing Agency" is the designated department or agency as specified by statute or regulation.*

EQUIVALENT FACILITATION. [HCD 1/AC] *See Chapter 11A, Section 1107A.5-E and Chapter 11B, Section 1102B ~~Definitions as applicable~~.*

~~**FACILITY**. See Section 1102.1~~

FACILITY (or FACILITIES). [HCD 1A/C] *See Chapter 11A Section 1107A.6-F and Chapter 11B, Section 1102B ~~For applications listed in Section 108.2.1.2 regulated by the Department of Housing and Community Development, see Chapter 11A, Section 1107A.6-F~~.*

~~[For HCD 1]~~ FAMILY. [HCD 1] *"Family" is an individual or two or more persons who by blood or marriage, or otherwise, live together in a dwelling unit.*

GRAB BAR. [HCD 1/AC]*See Chapter 11A, Section 1107A.7-G and Chapter 11B, Section 1102B ~~Definitions as applicable~~.*

~~GARAGE~~ *~~is a building or portion thereof in which a motor vehicle containing flammable or combustible liquids or gas in its tank or an electric vehicle with a rechargeable storage battery, fuel cell, photovoltaic array or other source of electric current is stored, repaired, charged (electric vehicles only) or kept.~~*

~~[For HCD 1 & HCD 2]~~ ~~**GRADE (Adjacent Ground Elevation)** is the lowest point of elevation of the finished surface of the ground, paving or sidewalk within the area between the building and the property line or, when the property line is more than 5 feet (1524 mm) from the building, between the building and a line 5 feet (1524 mm) from the building. *See Health and Safety Code Section 19955.3 (d).*~~

GRADE. [HCD 1 & HCD 2] *~~For applications listed in Section 108.2.1 regulated by the Department of Housing and Community Development, s~~ See Section 502.1.*

GROUND FLOOR. [HCD 1/AC] *See Chapter 11A, Section 1107A.7-G ~~For applications listed in Section 108.2.1.2 regulated by the Department of Housing and Community Development, see Chapter 11A, Section 1107A.7-G~~.*

GUARD *or GUARDRAIL [HCD 1]*. See Section 1002.1. ~~*For applications listed in Section 108.2.1 regulated by the Department of Housing and Community Development, "GUARD" shall have the same meaning as "GUARDRAIL".*~~

~~***[For HCD 1 & 2] GUARDRAIL*** *is a vertical barrier erected along the open edges of a floor opening, wall opening, ramp, platform, runway or other elevated area to prevent persons from falling off the open edge.*~~

HANDRAIL. See Section 1002.1. ~~***[For HCD 1/AC]*** *See Chapter 11A, Section 1102A.8-H.*~~

~~[For HCD 1 HCD 2]~~ HOTEL or MOTEL [HCD 1 HCD 2]" *Hotel or Motel" is any building containing six or more guest rooms intended or designed to be used, or which are used, rented or hired out to be occupied, or which are occupied for sleeping purposes by guests.*

***[For HCD 1]* IMPACT INSULATION CLASS (IIC)**. *is a single-number rating for ceiling/floor construction that represents the ability of the construction to isolate impact noise, where measurement procedure is based on ASTM E 492* *See Chapter 12, Section 1207.2.*

INTENDED TO BE OCCUPIED AS A RESIDENCE. See Section 1102.1.

INTERNATIONAL SYMBOL OF ACCESSIBILITY. [For HCD 1/AC] *See Chapter 11A, Section 1107A.9-I and Chapter 11B, Section 1102B Definitions as applicable.*

KICK PLATE. [HCD 1/AC] *See Chapter 11A, Section 1107A.11-K and Chapter 11B, Section 1102B Definitions as applicable.*

LEVEL AREA. [HCD 1/AC] *See Chapter 11A, Section 1107A.12-L and Chapter 11B, Section 1102B Definitions as applicable.*

LIFT, SPECIAL ACCESS. [For HCD 1/AC] *See "Special Access Lift" in Chapter 11A, Section 1107A.12-L and Chapter 11B, Section 1102B Definitions as applicable.*

LIGHT-FRAME CONSTRUCTION [For HCD ! & HCD 2] *is a type of construction whose vertical and horizontal structural elements are primarily framed by a system of repetitive wood or light gauge steel framing members, and which does not use structural concrete as a floor or roof diaphragm.*

[HCD 1 & HCD 2] LISTED. *: Notwithstanding other Sections of law, the applicable Section in Health and Safety Code Section is repeated here for clarification purposes.*

Section 17920(h). *Listed means all products that appear in a list published by an approved testing or listing agency.*

LISTED. See Section 902.1. *For applications listed in Sections 108.2.1.1 and 108.2.1.3 regulated by the Department of Housing and Community Development,* ***[HCD 1 & 2]*** *"Listed" means all products that appear in a list published by an approved testing or listing agency. For additional information, see Health and Safety Code Section 17920(h).*

[For HCD 1 & 2] LISTING AGENCY. [HCD 1 & 2] *Notwithstanding other Sections of law, the applicable Section of the Health and Safety Code is repeated here for clarity and reads as follows:*

Section 17920(i). *Listing agency For applications listed in Sections 108.2.1.1 and 108.2.1.2 regulated by the Department of Housing and Community Development, "Listing Agency" means an agency approved by the department that is in the business of listing and labeling products, materials, equipment, and installations tested by an approved testing agency, and that maintains a periodic inspection program on current production of listed products, equipment, and installations, and that, at least annually, makes available a published report of these listings. For additional information, see Health and Safety Code Section 17920(i).*

[For HCD 1] LIVING ACCOMMODATIONS *means any building or portion thereof having three or more apartments as defined in this Code or any publicly funded building or portion thereof.*

[For HCD 1 & HCD 2] LOBBY. [HCD 1 & 2] "Lobby" *is an area not defined as a waiting room at the entrance of a building through which persons must pass.*

[For HCD 1] LODGING HOUSE [HCD 1] *"Lodging House" is any building or portion thereof containing not more than five guest rooms where rent is paid in money, goods, labor or otherwise.*

MARKED CROSSING. [For HCD 1/AC] *See Chapter 11A, Section 1107A.13-M and Chapter 11B, Section 1102B Definitions as applicable.*

[For HCD 1] MESS HALL *is a room or portion of a room in an employee housing facility, other than a kitchen or dining area in a dwelling unit, used or intended for use for the serving of food.*

[For HCD 1] MESS HALL KITCHEN *is a room or portion of a room used or intended for use as a kitchen in conjunction with a mess hall.*

~~[For HCD 1]~~ MOTEL ~~*shall mean the same as hotel as defined in this Code*~~ *See "Hotel (or Motel)".*

~~**MULTILEVEL ASSEMBY SEATING.** See Section 1102.1.~~

MULITSTORY DWELLING UNIT. ~~[For HCD 1/AC]~~ *See Chapter 11A, Section 1107A.13-M* ~~*For applications listed in Section 108.2.1.2 regulated by the Department of Housing and Community Development, see Chapter 11A, Section 1107A.13-M.*~~

NEWLY CONSTRUCTED. ~~[For HCD1/AC]~~ *See Chapter 11A, Section 1107A.14-N.*

~~***[For HCD 1 & HCD 2]***~~ ***NORMAL [HCD 1 & HCD 2]*** *shall mean conforming to a pattern or standard regarded as usual or typical.*

~~***NOSE, NOSING. [For HCD 1/AC]*** *See Chapter 11A, Section1107A.14-N*~~

NOSING *(or NOSE)*. See Section 1002.1. ~~*For applications required to be accessible to persons with disabilities, see "NOSE/NOSING"*~~ ***[HCD 1 A/C]*** *See Chapter 11A, Section 1107A.14-N and Chapter 11B, Section 1102B* ~~*Definitions as applicable*~~.

~~***[For HCD 2] OCCUPIABLE*** *is a room or enclosed space designed for human occupancy in which individuals congregate for amusement, educational or similar purposes, or in which occupants are engaged at labor, and which is equipped with means of egress, light and ventilation.*~~

OPEN RISER. ~~[For~~ HCD 1/AC] *See Chapter 11A, Section 1107A.15-O and Chapter 11B, Section 1102B* ~~*Definitions as applicable*~~.

PASSAGE DOOR. ~~[For~~ HCD 1/AC] *See Chapter 11A, Section 1107A.16-P and Chapter 11B, Section 1102B* ~~*Definitions as applicable*~~.

~~***[For HCD 1 & HCD 2]***~~ ***PASSENGER ELEVATOR. [HCD 1 & HCD 2]*** ~~*For applications listed in Sections 108.2.1.1 and 108.2.1.3 regulated by the Department of Housing and Community Development,*~~ *"Passenger Elevator" is an elevator used primarily to carry persons. For additional information, see* ~~*definition of elevator, in CCR*~~ *California Code of Regulations, Title 24, Part 7, Article 7-6, Section 3009.*

~~***[For HCD 1]***~~ ***PASSIVE SOLAR ENERGY COLLECTOR. [HCD 1]*** ~~*For applications listed in Section 108.2.1.1 regulated by the Department of Housing and Community Development,*~~ *a "Passive Solar Energy Collector"* ~~*A passive solar energy collector*~~ *uses architectural components, rather than mechanical components, to provide heating or cooling for a building interior.*

PEDESTRIAN. ~~[For~~ HCD 1/AC] ~~*is an individual who moves in walking areas with or without the use of walking-assistive devices such as crutches, leg braces, wheelchairs, etc*~~ *See Chapter 11A, Section 1107A.16-P and Chapter 11B, Section 1102B* ~~*Definitions as applicable*~~.

PEDESTRIAN RAMP. ~~[For~~ HCD 1/AC] ~~*For applications listed in Sections 108.2.1.2 regulated by the Department of Housing and Community Development,*~~ *See Chapter 11A, Section 1107A.16-P and chapter 11B, Section1102B.*

PEDESTRIAN WAY. ~~[For~~ HCD 1/AC] *See Chapter 11A, Section 1107A.16-P and Chapter 11B, Section 1102B* ~~*Definitions as applicable*~~.

PERSONS WITH DISABILITIES. ~~[For~~ HCD 1/AC] ~~*For applications listed in Sections 108.2.1.2 regulated by the Department of Housing and Community Development,*~~ *See Chapter 11A, Section 1107A.16-P.*

POWDER ROOM. ~~[For~~ HCD 1/AC] *See Chapter 11A, Section 1107A.16-P.*

~~***[For HCD 1 & HCD 2] POWER-ASSISTED DOOR*** *is a door used for human passage with a mechanism that helps to open the door, or relieves the opening resistance of a door, upon the activation of a switch or a continued force applied to the door itself.*~~

~~[For HCD 1/AC]~~ PRIMARY ENTRY. [HCD 1/AC] *See Chapter 11A, Section 110~~2~~7A.16-P.*

~~[For HCD 1/AC]~~ PRIMARY ENTRY LEVEL. [HCD 1/AC] *See Chapter 11A, Section 110~~2~~7A.16-P and Chapter 11B, Section 1102B ~~Definitions as applicable~~.*

PUBLIC ACCOMMODATION. [HCD 1 & HCD 2] *"Public Accommodation" includes, but is not limited to, any building or facility or other specific public use entities not listed in items 1 through 12 if they fall into one or more of the following categories:*

1. Places of public lodging.
2. Establishments serving food or drink open to public use.
3. Places of exhibition or entertainment open to public use.
4. Places of public gathering.
5. Sales or rental establishments open to public use.
6. Service establishments open to public use.
7. Stations used for public transportation.
8. Places of public display or collection.
9. Places of public recreation.
10. Places of public education.
11. Social service center establishments open to the general public.
12. Places of exercise or recreation open to public use.

Examples of public accommodations for purposes of this code shall include, but not be limited to, the following private entities:

1. An inn, hotel, motel, or other place of public lodging, except for a lodging house located within a building that contains not more than five rooms for rent or hire and that is actually occupied by the proprietor of such establishment as the residence of such proprietor.
2. A restaurant, bar, or other establishment serving food or drink.
3. A motion picture house, theater, concert hall, stadium or other place of exhibition or entertainment.
4. An auditorium, convention center, lecture hall, or other place of public gathering.
5. A bakery, grocery store, clothing store, hardware store, shopping center, or other sales or retail establishment.
6. A laundromat, dry cleaner, bank, barber shop, beauty shop, travel service, shoe repair service, funeral parlor, gas station, office of an accountant or lawyer, pharmacy, insurance office, professional office of a health care provider, hospital or other service establishment.
7. A terminal, depot, or other station used for specified public transportation.
8. A museum, library, gallery, or other place of public display or collection.
9. A park, zoo, amusement park, or other place of recreation.
10. A nursery, elementary, secondary, undergraduate, or postgraduate private school, or other place of education.
11. A day-care center, senior citizen center, homeless shelter, food bank, adoption agency or other social service center establishment.
12. A gymnasium, health spa, bowling alley, golf course, or other place of exercise.
13. A church.
14. An office building.
15. A public curb or sidewalk.

PUBLICLY FUNDED. [HCD 1 & HCD 2] *For the purpose of housing, all buildings, structures, sidewalks, curbs and related facilities constructed in the state and used or intended to be used as a public-use area, as defined in Section 1107A.16-P, shall comply with the accessibility standards of Chapter 11B of this code when state, county or municipal funds, or funds of any political subdivision of the state are used.*

PUBLIC ENTRANCE. ~~See Section 1102.1.~~ ***[HCD 1/AC]*** ~~*For applications listed in Section 108.2.1.2 regulated by the Department of Housing and Community Development,*~~ *"Public Entrance" is an entrance that is not a service entrance or a restricted entrance.*

PUBLIC-USE AREAS. ~~See Section 1102.1~~ ~~***PUBLIC USE AREA.***~~ ***[~~For~~ HCD 1/AC]*** *See Chapter 11A, Section 1107A.16-P and Chapter 11B, Section 1102B ~~Definitions as applicable~~.*

RAMP. [HCD 1/AC]*See Chapter 11A, Section 1107A.18-R* ~~*For applications listed in Section 108.2.1.2 regulated by the Department of Housing and Community Development, see Chapter 11A, Section 1107A.18-R.*~~

[For HCD 2] REASONABLE PORTION *shall mean that segment of a building, facility, area, space or condition which would normally be necessary if the activity therein is to be accessible by persons with disabilities.*

[For HCD 1 & HCD 2] RECOMMEND [HCD 1 & HCD 2] *"Recommend" does not require mandatory acceptance, but identifies a suggested action that shall be considered for the purpose of providing a greater degree of accessibility to persons with disabilities.*

[For HCD 1&HCD 2] REMODELING. *See alter or alteration.*

RESTRICTED ENTRANCE. See Section 1102.1. ***[HCD 1, HCD 2 & HCD 1/AC]*** *For applications listed in Section 108.2.1.2 regulated by the Department of Housing and Community Development, "Restricted Entrance" is an entrance that is made available for common use on a controlled basis, but is not public use, and that is not a service entrance.*

RISER. [For HCD 1/AC] *See Chapter 11A, Section 1107A.18-R and Chapter 11B, Section 1102B Definitions as applicable.*

[For HCD 1 & HCD 2] SANITARY FACILITY [HCD 1 & HCD 2] *"Sanitary Facility" is any single water closet, urinal, lavatory, bathtub or shower, or a combination thereof, together with the room or space in which they are housed.*

SELF-SERVICE STORAGE FACILITY. See Section 1102.1.

SERVICE ENTRANCE. See Section 1102.1 ***[HCD 1/AC]*** *For applications listed in Section 108.2.1.2 regulated by the Department of Housing and Community Development, "Service Entrance" is an entrance intended primarily for the delivery of goods or services.*

[For HCD 2] SHOPPING CENTER [HCD 2] *is one or more sales establishments or stores.*

[For HCD 1 & HCD 2] SHOULD. [HCD 1 & HCD 2] *See "Recommend".*

SIDEWALK. [HCD 1/AC] *"Sidewalk" is a surfaced pedestrian way contiguous to a street used by the public. See definition for "WALK" in Chapter111A, Section 1107A.23-W (As differentiated from the definition of walk in Chapter 11A, Section 1107A.23W and Chapter 11B, Section 1102B).*

[For HCD 1 & HCD 2] SINGLE-ACCOMMODATION SANITARY FACILITY. [HCD 1 & HCD 2] *"Single-Accommodation Sanitary Facility" is a room that has not more than one of each type of sanitary fixture, is intended for use by only one person at a time, has no partition around the toilet, and has a door that can be locked on the inside by the room occupant.*

SITE. See Section 1102.1. ***[For HCD 1 & HCD 2] SITE. [HCD 1 & HCD 2]*** *For applications listed in Section 108.2.1.2 regulated by the Department of Housing and Community Development, "Site" is a parcel of land bounded by a property line or a designated portion of a public right of way.*

SITE DEVELOPMENT. [HCD 1/AC] "*Site Development" is "on-site" and "off-site work", including, but not limited to, walks, sidewalks, ramps, curbs, curb ramps, parking facilities, stairs, planting areas, pools, promenades, exterior gathering or assembly areas and raised or depressed paved areas.*

SLEEPING ACCOMMODATIONS. [For HCD 1/AC] *See Chapter 11A, Section 1107A.19-S and Chapter 11B, Section 1102B Definitions as applicable.*

SLOPE. [HCD 1/AC] *See Chapter 11A, Section 1107A.19-S For applications listed in Section 108.2.1.2 regulated by the Department of Housing and Community Development, see Chapter 11A, Section 1107A.19-S.*

[For HCD 1] SOUND TRANSMISSION CLASS (STC). [HCD 1] *is a single-figure rating for floor/ceiling and interior wall partition construction that represents the ability of the construction to isolate airborne noise, where measurement procedure is based on ASTM E 90-70 or ASTM E 366-71 See Chapter 12, Section 1207.2.*

***[For HCD 2]* SPACE. [HCD 2]** *For applications listed in Section 108.2.1.3 regulated by the Department of Housing and Community Development, "Space" is a definable area, e.g. for example a, room, toilet room, hall, assembly area, entrance, storage room, alcove, courtyard, or lobby.*

SPECIAL ACCESS LIFT. [HCD 1/AC] *See Chapter 11A, Section 1107A.19-S and Chapter 11B, section 1102B.*

[For HCD 1 & HCD 2] STAIRWAY. *Two or more risers shall constitute a stairway.*

[ForHCD1&HCD 2] SQUARE FEET *is abbreviated as ft.2.*

[ForHCD2 TACTILE [HCD2] *describes an object that can be perceived using the sense of touch.*

[For HCD 2] TECHNICALLY INFEASIBLE *means, with respect to an alteration of a building or a facility, that it has little likelihood of being accomplished because existing structural conditions would require removing or altering a load bearing member which is an essential part of the structural frame; or because other existing physical or site constraints prohibit modification or addition of elements, spaces, or features which are in full and strict compliance with the minimum requirements for new construction and which are necessary to provide accessibility.*

[HCD 1 & HCD 2] TESTING AGENCY. [HCD 1 & HCD 2] *Notwithstanding other Sections of law, the applicable Section of the Health and Safety Code is repeated here for clarity and reads as follows:* ***Section 17920(m).*** *Testing agency For applications listed in Sections 108.2.1.1 and 108.2.1.3 regulated by the Department of Housing and Community Development, "Testing Agency" means an agency approved by the department as qualified and equipped for testing of products, materials, equipment, and installations in accordance with nationally recognized standards. For additional information, see Health and Safety Code Section 17920(m).*

[For HCD 1 & HCD 2] THROUGH-PENETRATION FIRESTOP *is a material, device or construction installed to resist, for a prescribed time period, the passage of flame, heat and hot gases through openings which penetrate the entire fire-resistive assembly in order to accommodate cables, cable trays, conduit, tubing, pipes or similar items.*

TOEBOARD. [HCD 1/AC] *See Chapter 11A, Section 1107A.20-T For applications listed in Section 108.2.1.2 regulated by the Department of Housing and Community Development, see Chapter 11A, Section 1107A.20-T.*

TOWNHOUSE. [For HCD 1/AC] *See Chapter 11A, Section 1107A.20-T*

TOWNHOUSE A single family-dwelling unit constructed in a group of three or more attached units in which each unit extends from the foundation to roof and with open space on at least two sides. *For applications required to provide accommodations for persons with disabilities as listed in Section 108.2.1.2, the Department of Housing and Community Development does not adopt the model code definition of "TOWNHOUSE", See Chapter 11A, Section 1107A.20-T.*

TOWNHOUSE A single family-dwelling unit constructed in a group of three or more attached units in which each unit extends from the foundation to roof and with open space on at least two sides. ***[HCD 1 A/C]*** *For applications required to provide accommodations for persons with disabilities , See Chapter 11A, Section 1107A.20-T.*

TRANSIENT LODGING. [HCD 1/AC] *For applications listed in Section 108.2.1.2 regulated by the Department of Housing and Community Development, s See Chapter 11A, Section 1107A.20-T.*

TREAD. [For HCD 1 & HCD 2] *See Chapter 11A, Section 1102A.20-T and Chapter 11B, Section 1102B Definitions as applicable.*

TREAD DEPTH. [For HCD 1/AC] *See Chapter 11A, Section 1107A.20-T and Chapter 11B, Section 1102B Definitions as applicable.*

TREAD RUN. [~~For~~ HCD 1/AC] *See Chapter 11A, Section 1107A.20-T and Chapter 11B, Section 1102B ~~Definitions as applicable~~.*

~~**TYPE A UNIT. See Section 1102.1.**~~

~~**TYPE B UNIT. See Section 1102.1.**~~

~~***[For HCD 1 & HCD 2] UBC*** *shall mean the most recently adopted edition of the* Uniform Building Code *as published by the International Conference of Building Officials. References to other model Code Sections which are found in any adopted Sections of the model Code or Title 24, C.C.R., must be compared to the appropriate matrix adoption table to determine if the enforcing agency has adopted the model Code Section or a modified Title 24, C.C.R., Section.*~~

~~***[For HCD 1 & HCD 2]*** **UBC STANDARDS** are those standards published in Volume 3 of the *Uniform Building Code* promulgated by the International Conference of Building Officials, as adopted by this jurisdiction. (See Chapter 35.)~~

VEHICULAR OR PEDESTRIAN ARRIVAL POINTS. [HCD 1/AC] *See Chapter 11A, Section 1107.22-V. ~~For applications listed in Section 108.2.1.2 regulated by the Department of Housing and Community Development, see Chapter 11A, Section 1107A.22-V.~~*

WALK. [~~For~~ HCD 1/AC] *See Chapter 11A, Section 1102A.23-W and Chapter 11B, Section 1102B ~~Definitions as applicable~~.*

WHEELCHAIR. *~~See Chapter 11A, Section 1107A.23-W~~* ***[HCD 1/AC]*** *"Wheelchair" is a chair mounted on wheels to be propelled by its occupant manually or with the aid of electric power, of a size and configuration conforming to the recognized standard models of the trade.*

WHEELCHAIR SPACE. ~~See Section 1102.1~~ *~~For applications listed in Section 108.2.1.3 regulated by the Department of Housing and Community Development,~~* ***[HCD 1/AC]*** *"Wheelchair Space" is space for a single wheelchair and its occupant.*

~~***[For HCD 2] WORK STATION*** *is an area defined by equipment and/or work surfaces intended for use by employees only, and generally for one or a small number of employees at a time. Examples include ticket booths; the employee side of grocery store checkstands; the bartender area behind a bar; the employee side of snack bars, sales counters and public counters; guardhouses; toll booths; kiosk vending stands; lifeguard stations; maintenance equipment closets; counter and equipment areas in restaurant kitchens; file rooms; storage areas; etc.*~~

NOTE:
Authority cited: Health and Safety Code Sections 17040, 17921, 17922, 18300, 18865 and 19990; and Government Code Sections 12955.1 and 12955.1.1.
Reference: Health and Safety Code Sections 17000 through 17060, 17910 through 17990, 18620, 18630, 18640, 18670, 18690, 18691, 18873 through 18873.5 and 19960 through 19997; and Government Code Sections 12955.1 and 12955.1.1.

CHAPTER 3
USE AND OCCUPANCY CLASSIFICATIONS

(Note: Adopt only those sections listed in the Matrix Adoption Table.)

302.1 General. Structures or portions of structures shall be classified with respect to occupancy in one or more of the groups listed below. A room or space that is intended to be occupied at different times for different purposes shall comply with all of the requirements that are applicable to each of the purposes for which the room or space will be occupied. Structures with multiple occupancies or uses shall comply with Section 508. Where a structure is proposed for a purpose that is not specifically provided for in this code, such structure shall be classified in the group that the occupancy most nearly resembles, according to the fire safety and relative hazard involved.

1. Assembly (see Section 303): Groups A-1, A-2, A-3, A-4 and A-5
2. Business (see Section 304): Group B
3. Educational (see Section 305): Group E
4. Factory and Industrial (see Section 306): Groups F-1 and F-2
5. High Hazard (see Section 307): Groups H-1, H-2, H-3, H-4 and H-5
6. Institutional (see Section 308): Groups I-1, I-2, I-3 and I-4
7. Mercantile (see Section 309): Group M
8. Residential (see Section 310): Groups R-1, R-2, R-3, ***[HCD 1]*** *R-3.1* and R-4
9. Storage (see Section 311): Groups S-1 and S-2
10. Utility and Miscellaneous (see Section 312): Group U

308.2 Group I-1. This occupancy shall include buildings, structures or parts thereof housing more than 16 persons, on a 24-hour basis, who because of age, mental disability or other reasons, live in a supervised residential environment that provides personal care services. The occupants are capable of responding to an emergency situation without physical assistance from staff. This group shall include, but not be limited to, the following:

Residential board and care facilities
Assisted living facilities
Halfway houses
Group homes
Congregate care facilities
Social rehabilitation facilities
Alcohol and drug centers
Convalescent facilities

A facility such as the above with five or fewer persons shall be classified as a Group R-3 ~~or shall comply with the International Residential Code in accordance with Section 101.2~~. A facility such as above, housing at least six and not more than 16 persons, shall be classified as Group R-4.

308.3 Group I-2. This occupancy shall include buildings and structures used for medical, surgical, psychiatric, nursing or custodial care on a 24-hour basis of more than five persons who are not capable of self-preservation. This group shall include, but not be limited to, the following:

Hospitals
Nursing homes (both intermediate-care facilities and skilled nursing facilities)
Mental hospitals
Detoxification facilities

A facility such as the above with five or fewer persons shall be classified as Group R-3 ~~or shall comply with the International Residential Code in accordance with Section 101.2~~.

308.5 Group I-4, day care facilities. This group shall include buildings and structures occupied by persons of any age who receive custodial care for less than 24 hours by individuals other than parents or guardians, relatives by blood, marriage or adoption, and in a place other than the home of the person cared for. A facility such as the above with five or fewer persons shall be classified as a Group R-3 ~~or shall comply with the International Residential Code in accordance with Section 101.2~~. Places of worship during religious functions are not included.

Section 310
RESIDENTIAL GROUP R

310.1 Residential Group "R". Residential Group R includes, among others, the use of a building or structure, or a portion thereof, for sleeping purposes when not classified as an Institutional Group I ~~or when not regulated by the *International Residential Code* in accordance with Section 101.2~~. Residential occupancies shall include the following:

R-1 Residential occupancies containing sleeping units where the occupants are primarily transient in nature, including:

Boarding houses (transient)
Hotels (transient)
Motels (transient)
[HCD 1]*Efficiency dwelling units (transient)*

R-2 Residential occupancies containing sleeping units or more than two dwelling units where the occupants are primarily permanent in nature, including:

Apartment houses
Boarding houses (not transient)
Convents
Dormitories
Fraternities and sororities
Hotels (nontransient)
Monasteries
Motels (nontransient)
Vacation timeshare properties
[HCD 1]*Efficiency dwelling units (nontransient)*

Congregate living facilities with 16 or fewer occupants are permitted to comply with the construction requirements for Group R-3.

R-3 Residential occupancies where the occupants are primarily permanent in nature and not classified as Group R-1, R-2, ***[HCD 1]****R-3.1,* R-4 or I, including:

[HCD 1] Buildings *other than townhouses* that do not contain more than two dwelling units.

[HCD 1] *Townhouses not more than three stories above grade in height with a separate means of egress.*

Adult facilities that provide accommodations for ~~five or fewer persons~~ *clients* of any age for less than 24-hours. *Licensing categories that may use this classification include, but are not limited to: Adult Day-care Facilities, Adult Day-support Center.*

Child care facilities that provide accommodations for ~~five or fewer persons~~ *clients* of any age for less than 24-hours. *Licensing categories that may use this classification include, but are not limited to: Family Day-care Homes, Day-care Center for Mildly Ill Children, Infant Care Center and School Age Child Day-care Center.*

Congregate living facilities with 16 or fewer persons.

~~Adult and child care facilities that are within a single-family home are permitted to comply with the *International Residential Code*.~~

R-3.1 ***[HCD 1]*** *This occupancy group may include facilities licensed by a governmental agency for a residentially based 24-hour care facility providing accommodations for six or fewer clients of any age. Clients may be classified as ambulatory, nonambulatory or bedridden. A Group R-3.1 occupancy shall meet the requirements for construction as defined for Group R-3, except as otherwise provided for in Section ~~419.4~~ 425 "Special Provisions for Licensed 24-Hour Care Facilities in a Group I-1, R-3.1 or R-4 Occupancy".*

R-4 Residential occupancies shall include buildings arranged for occupancy as residential care/assisted living facilities including more than ~~five~~ *six* ~~but not more than 16~~ *ambulatory* ~~occupants~~ *clients*, excluding staff.

Group R-4 occupancies shall meet the requirements for construction as defined for Group R-3, except as otherwise provided for in this code ~~or shall comply with the *International Residential Code*~~.

NOTE:
Authority cited: Health and Safety Code Sections 17040, 17921, 17922, 18300, 18865 and 19990; and Government Code Sections 12955.1 and 12955.1.1.
Reference: Health and Safety Code Sections 17000 through 17060, 17910 through 17990, 18620, 18630, 18640, 18670, 18690, 18691, 18873 through 18873.5 and 19960 through 19997; and Government Code Sections 12955.1 and 12955.1.1.

CHAPTER 4
SPECIAL DETAILED REQUIREMENTS BASED ON USE AND OCCUPANCY

(Note: Adopt only those sections listed in the Matrix Adoption Table.)

406.2.2 Clear Height. The clear height of each floor level in vehicle and pedestrian traffic areas shall not be less than 7 feet (2134 mm). ~~Vehicle and pedestrian areas accommodating van-accessible parking required by Section 1106.5 shall conform to ICC A117.1~~ ***[HCD 1/AC]*** *The clear height of vehicle and pedestrian areas required to be accessible shall comply with Chapter 11A or Chapter 11B as applicable.*

406.4.2 Ventilation. A mechanical ventilation system shall be provided in accordance with the ~~*International*~~ *California Mechanical Code*.

409.3 Projection Room and Equipment Ventilation. Ventilation shall be provided in accordance with the ~~*International*~~ *California Mechanical Code*.

414.1.2 Materials. The safe design of hazardous material occupancies is material dependent. Individual material requirements are also found in Sections 307 and 415, and in the ~~*International*~~ *California Mechanical Code* and the *International Fire Code*.

414.3 Ventilation. Rooms, areas or spaces of Group H in which explosive, corrosive, combustible, flammable or highly toxic dusts, mists, fumes, vapors or gases are or may be emitted due to the processing, use, handling or storage of materials shall be mechanically ventilated as required by the *International Fire Code* and the ~~*International*~~ *California Mechanical Code*.

Ducts conveying explosives or flammable vapors, fumes or dusts shall extend directly to the exterior of the building without entering other spaces. Exhaust ducts shall not extend into or through ducts and plenums.

Exception: Ducts conveying vapor or fumes having flammable constituents less than 25 percent of their lower flammable limit (LFL) are permitted to pass through other spaces.

Emissions generated at workstations shall be confined to the area in which they are generated as specified in the *International Fire Code* and the ~~*International*~~ *California Mechanical Code*.

The location of supply and exhaust openings shall be in accordance with the ~~*International*~~ *California Mechanical Code*. Exhaust air contaminated by highly toxic material shall be treated in accordance with the *International Fire Code*.

415.6.2 Flammable and Combustible Liquids. The storage, handling, processing and transporting of flammable and combustible liquids shall be in accordance with the ~~*International*~~ *California Mechanical Code* and the *International Fire Code.*

415.6.3 Liquefied Petroleum Gas-Distribution Facilities. The storage and handling of liquefied petroleum gas systems shall conform to the *International Fire Code*. The design and installation of piping, equipment and systems that utilize liquefied petroleum gas shall be in accordance with the ~~*International Fuel Gas*~~ *California Mechanical Code and the California Plumbing Code*. Liquefied petroleum gas-distribution facilities shall be ventilated in accordance with the ~~*International*~~ *California Mechanical Code* and Section 415.6.3.1.

419.4 Townhouses. [HCD 1] *Each townhouse unit shall be considered a separate building and shall comply with the following:*

1. Adjacent townhouse units shall each be provided with a one- hour fire-resistance-rated wall assembly separating the units.

2. Openings are not permitted.

3. Penetrations shall comply with Section 705.9.

Exception: In lieu of the two one-hour walls a common 2-hour fire-resistance-rated wall shall be permitted for townhouses if such walls do not contain plumbing or mechanical equipment, ducts or vents in the cavity of the common wall. Electrical installations shall be installed in accordance with the California Electrical Code. Penetrations of electrical outlet boxes shall be in accordance with Section 712.

For purposes of determining accessibility requirements to accommodate persons with disability, dwelling units within a single structure separated by a firewall do not constitute separate structures or buildings and are treated as a single building. For additional information, see Chapter 11A, Section 1102A.1.

419.4.1 Continuity. [HCD 1] *The fire-resistance-rated wall or assembly separating townhouses shall be continuous from the foundation to the underside of the roof sheathing, deck or slab. The fire-resistance rating shall extend the full length of the wall or assembly, including wall extensions through and separating attached enclosed accessory structures.*

419.4.2 Parapets. [HCD 1] *Parapets constructed in accordance with Section 704.11.1shall be constructed for townhouses as an extension of exterior walls or common walls in accordance with the following:*

1. Where roof surfaces adjacent to the wall or walls are at the same elevation, the parapet shall extend not less than 30 inches (762 mm) above the roof surfaces.

2. Where roof surfaces adjacent to the wall or walls are at different elevations and the higher roof is not more than 30 inches (762 mm) above the lower roof, the parapet shall extend not less than 30 inches (762 mm) above the lower roof surface.

Exception: *A parapet is not required in the two cases above when the roof is covered with a minimum class C roof covering, and the roof decking or sheathing is of noncombustible materials or approved fire-retardant-treated wood for a distance of 4 feet (1219 mm) on each side of the wall or walls, or one layer of 5/8-inch (15.9 mm) Type X gypsum board is installed directly beneath the roof decking or sheathing, supported by a minimum of nominal 2-inch (51 mm) ledgers attached to the sides of the roof framing members, for a minimum distance of 4 feet (1220 mm) on each side of the wall or walls.*

3. A parapet is not required where roof surfaces adjacent to the wall or walls are at different elevations and the higher roof is more than 30 inches (762 mm) above the lower roof. The common wall construction from the lower roof to the underside of the higher roof deck shall have not less than a 1-hour fire-resistance rating. The wall shall be rated for exposure from both sides.

419.4.3 Parapet Construction. [HCD 1] *Parapets shall have the same fire-resistance rating as that required for the supporting wall or walls. On any side adjacent to a roof surface, the parapet shall have noncombustible faces for the uppermost 18 inches (457 mm), to include counterflashing and coping materials. Where the roof slopes toward a parapet at slopes greater than two units vertical in 12 units horizontal (16.7-percent slope), the parapet shall extend to the same height as any portion of the roof within a distance of 3 feet (914 mm), but in no case shall the height be less than 30 inches (762 mm).*

419.4.4 Structural Independence. [HCD 1] *Each individual townhouse shall be structurally independent.*

Exceptions:

1. Foundations supporting exterior walls or common walls.
2. Structural roof and wall sheathing from each unit may fasten to the common wall framing.
3. Nonstructural wall coverings.
4. Flashing at termination of roof covering over common wall.
5. Townhouses separated by a common 2-hour fire-resistance-rated wall as provided in Section 419.4.

NOTE:
Authority cited: Health and Safety Code Sections 17040, 17921, 17922, 18300, 18865 and 19990; and Government Code Sections 12955.1 and 12955.1.1.
Reference: Health and Safety Code Sections 17000 through 17060, 17910 through 17990, 18620, 18630, 18640, 18670, 18690, 18691, 18873 through 18873.5 and 19960 through 19997; and Government Code Sections 12955.1 and 12955.1.1.

CHAPTER 5
GENERAL BUILDING HEIGHTS AND AREAS

(Note: Adopt only those sections listed in the Matrix Adoption Table.)

502.1 Definitions. The following words and terms shall, for the purposes of this chapter and as used elsewhere in this code, have the meanings shown herein.

GRADE PLANE. A reference plane representing the average of finished ground level adjoining the building at exterior walls. Where the finished ground level slopes away from the exterior walls, the reference plane shall be established by the lowest points within the area between the building and the lot line or, where the lot line is more than 6 feet (1829 mm) from the building, between the building and a point 6 feet (1829mm) from the building.

(Section 208-G, 2001 CBC) ***[HCD 1 and HCD 2]*** *~~For applications listed in Section 108.2.1.2 regulated by the Department of Housing and Community Development.~~ "Grade or Gradeplane" is the lowest point of elevation of the finished surface of the ground, paving or sidewalk within the area between the building and the property line or, when the property line is more than 5 feet (1524 mm) from the building, between the building and a line 5 feet (1524 mm) from the building. For additional information, see Health and Safety Code Section 19955.3 (d).*

503.1 General. The height and area for buildings of different construction types shall be governed by the intended use of the building and shall not exceed the limits in Table 503 except as modified hereafter. Each part of a building included within the exterior walls or the exterior walls and fire walls where provided shall be permitted to be a separate building.

> *(Section 310.2.1, 2001 CBC)* ***Exception: [~~For~~ HCD 1]*** *Limited-density owner-built rural dwellings may be of any type of construction which will provide for a sound structural condition. Structural hazards which result in an unsound condition and which may constitute a substandard building are delineated by Section 17920.3 of the Health and Safety Code.*

NOTE:
Authority cited: Health and Safety Code Sections 17040, 17921, 17922, 18300, 18865 and 19990; and Government Code Sections 12955.1 and 12955.1.1.
Reference: Health and Safety Code Sections 17000 through 17060, 17910 through 17990, 18620, 18630, 18640, 18670, 18690, 18691, 18873 through 18873.5 and 19960 through 19997; and Government Code Sections 12955.1 and 12955.1.1.

CHAPTER 6
TYPES OF CONSTRUCTION

(Note: Adopt entire chapter with amendments.)

TABLE 602
FIRE RESISTANCE RATING REQUIREMENTS FOR EXTERIOR WALLS BASED ON FIRE SEPARATION DISTANCE[a, e]

FIRE SEPARATION DISTANCE = X (feet)	TYPE OF CONSTRUCTION	OCCUPANCY GROUP H	OCCUPANCY GROUP F-1, M, S-1	OCCUPANCY GROUP A, B, E, F-2, I, R [f], S-2, U[b] [f]
X < 5[c]	All	3	2	1
5 ≤ X < 10	IA Others	3 2	2 1	1 1
10 ≤ X < 30	IA, IB	2	1	1[d]

	IIB, VB Others	1 1	0 1	0 1[d]
X ≥ 30	All	0	0	0

For SI: 1 foot = 304.8 mm.

a. Load-bearing exterior walls shall also comply with the fire-resistance rating requirements of Table 601.

b. For special requirements for Group U occupancies see Section 406.1.2

c. See Section 705.1.1 for party walls.

d. Open parking garages complying with Section 406 shall not be required to have a fire-resistance rating.

e. The fire-resistance rating of an exterior wall is determined based upon the fire separation distance of the exterior wall and the story in which the wall is located.

f. Group R-3 and Group U when used as accessory to Group R-3, shall not be required to have a fire-resistance rating where the fire separation distance is 5 feet or more.

603.1 Allowable materials. Combustible materials shall be permitted in buildings of Type I or Type II construction in the following applications and in accordance with Sections 603.1.1 through 603.1.3:

1. Fire-retardant-treated wood shall be permitted in:
   1.1. Nonbearing partitions where the required fire-resistance rating is 2 hours or less.
   1.2. Nonbearing exterior walls where no fire rating is required.
   1.3. Roof construction, including girders, trusses, framing and decking.

   Exception: In buildings of Type I construction exceeding two stories in height, fire-retardant-treated wood is not permitted in roof construction when the vertical distance from the upper floor to the roof is less than 20 feet (6096 mm).

2. Thermal and acoustical insulation, other than foam plastics, having a flame spread index of not more than 25.

   Exceptions:
   1. Insulation placed between two layers of noncombustible materials without an intervening airspace shall be allowed to have a flame spread index of not more than 100.
   2. Insulation installed between a finished floor and solid decking without intervening airspace shall be allowed to have a flame spread index of not more than 200.
   3. Foam plastics in accordance with Chapter 26.
   4. Roof coverings that have an A, B or C classification.
   5. Interior floor finish and interior finish, trim and millwork such as doors, door frames, window sashes and frames.
   6. Where not installed over 15 feet (4572 mm) above grade, show windows, nailing or furring strips and wooden bulkheads below show windows, including their frames, aprons and show cases.
   7. Finished flooring applied directly to the floor slab or to wood sleepers that are fireblocked in accordance with Section 717.2.7.
   8. Partitions dividing portions of stores, offices or similar places occupied by one tenant only and that do not establish a corridor serving an occupant load of 30 or more shall be permitted to be constructed of fire-retardant-treated wood, 1-hour fire-resistance-rated construction or of wood panels or similar light construction up to 6 feet (1829 mm) in height.
   9. Stages and platforms constructed in accordance with Sections 410.3 and 410.4, respectively.
   10. Combustible exterior wall coverings, balconies and similar projections and bay or oriel windows in accordance with Chapter 14.
   11. Blocking such as for handrails, millwork, cabinets and window and door frames.
   12. Light-transmitting plastics as permitted by Chapter 26.
   13. Mastics and caulking materials applied to provide flexible seals between components of exterior wall construction.
   14. Exterior plastic veneer installed in accordance with Section 2605.2.
   15. Nailing or furring strips as permitted by Section 803.4.
   16. Heavy timber as permitted by Note d to Table 601 and Sections 602.4.7 and 1406.3.

17. Aggregates, component materials and admixtures as permitted by Section 703.2.2.
18. Sprayed fire-resistant materials and intumescent and mastic fire-resistant coatings, determined on the basis of fire-resistance tests in accordance with Section 703.2 and installed in accordance with Section 1704.10 and 1704.11, respectively.
19. Materials used to protect penetrations in fire-resistance-rated assemblies in accordance with Section 712.
20. Materials used to protect joints in fire-resistance-rated assemblies in accordance with Section 713.
21. Materials allowed in the concealed spaces of buildings of Type I and II construction in accordance with Section 717.5.
22. Materials exposed within plenums complying with Section 602 of the ~~*International*~~ *California Mechanical Code.*

603.1.1 Ducts. The use of nonmetallic ducts shall be permitted when installed in accordance with the limitations of the ~~*International*~~ *California Mechanical Code*.

603.1.2 Piping. The use of combustible piping materials shall be permitted when installed in accordance with the limitations of the ~~*International*~~ *California Mechanical Code* and the ~~*International*~~ *California Plumbing Code*.

603.1.3 Electrical. The use of electrical wiring methods with combustible insulation, tubing, raceways and related components shall be permitted when installed in accordance with the limitations of the ~~ICC~~ *California Electrical Code*.

NOTE:
Authority cited: Health and Safety Code Sections 17040, 17921, 17922, 18300, 18865 and 19990; and Government Code Sections 12955.1 and 12955.1.1.
Reference: Health and Safety Code Sections 17000 through 17060, 17910 through 17990, 18620, 18630, 18640, 18670, 18690, 18691, 18873 through 18873.5 and 19960 through 19997; and Government Code Sections 12955.1 and 12955.1.1.

CHAPTER 7
FIRE-RESISTANCE-RATED CONSTRUCTION

(Note: Adopt only those sections listed in the Matrix Adoption Table.)

707.2 Shaft Enclosure Required. Openings through a floor/ceiling assembly shall be protected by a shaft enclosure complying with this section.

Exceptions:

1. A shaft enclosure is not required for openings totally within an individual residential dwelling unit and connecting four stories or less.

2. A shaft enclosure is not required in a building equipped throughout with an automatic sprinkler system in accordance with Section 903.3.1.1 for an escalator opening or stairway that is not a portion of the means of egress protected according to Item 2.1 or 2.2:

2.1. Where the area of the floor opening between stories does not exceed twice the horizontal projected area of the escalator or stairway and the opening is protected by a draft curtain and closely spaced sprinklers in accordance with NFPA 13. In other than Groups B and M, this application is limited to openings that do not connect more than four stories.

2.2. Where the opening is protected by approved power-operated automatic shutters at every penetrated floor. The shutters shall be of noncombustible construction and have a fire-resistance rating of not less than 1.5 hours. The shutter shall be so constructed as to close immediately upon the actuation of a smoke detector installed in accordance with Section 907.11 and shall completely shut off the well opening. Escalators shall cease operation when the shutter begins to close. The shutter shall operate at a speed of not more than 30 feet per minute (152.4 mm/s) and shall be equipped with a sensitive leading edge to arrest its progress where in contact with any obstacle, and to continue its progress on release therefrom.

3. A shaft enclosure is not required for penetrations by pipe, tube, conduit, wire, cable and vents protected in accordance with Section 712.4.

4. A shaft enclosure is not required for penetrations by ducts protected in accordance with Section 712.4. Grease ducts shall be protected in accordance with the ~~International~~ *California Mechanical Code.*

5. In other than Group H occupancies, a shaft enclosure is not required for floor openings complying with the provisions for atriums in Section 404.

6. A shaft enclosure is not required for approved masonry chimneys where annular space protection is provided at each floor level in accordance with Section 717.2.5.

7. In other than Groups I-2 and I-3, a shaft enclosure is not required for a floor opening or an air transfer opening that complies with the following:

7.1. Does not connect more than two stories.

7.2. Is not part of the required means of egress system, except as permitted in Section 1020.1.

7.3. Is not concealed within the building construction.

7.4. Is not open to a corridor in Group I and R occupancies.

7.5. Is not open to a corridor on nonsprinklered floors in any occupancy.

7.6. Is separated from floor openings and air transfer openings serving other floors by construction conforming to required shaft enclosures.

7.7. Is limited to the same smoke compartment.

8. A shaft enclosure is not required for automobile ramps in open and enclosed parking garages constructed in accordance with Sections 406.3 and 406.4, respectively.

9. A shaft enclosure is not required for floor openings between a mezzanine and the floor below.

10. A shaft enclosure is not required for joints protected by a fire-resistant joint system in accordance with Section 713.

11. A shaft enclosure shall not be required for floor openings created by unenclosed stairs or ramps in accordance with Exception 8 or 9 in Section 1020.1.

12. Floor openings protected by floor fire doors in accordance with Section 711.8.

13. Where permitted by other sections of this code.

708.4 Continuity. Fire partitions shall extend from the top of the foundation or floor/ceiling assembly below to the underside of the floor or roof sheathing, slab or deck above or to the fire-resistance-rated floor/ceiling or roof/ceiling assembly above, and shall be securely attached thereto. If the partitions are not continuous to the sheathing, deck or slab, and where constructed of combustible construction, the space between the ceiling and the sheathing, deck or slab above shall be fireblocked or draftstopped in accordance with Sections 717.2 and 717.3 at the partition line. The supporting construction shall be protected to afford the required fire-resistance rating of the wall supported, except for tenant and sleeping unit separation walls and corridor walls in buildings of Types IIB, IIIB and VB construction.

Exceptions:

1. The wall need not be extended into the crawl space below where the floor above the crawl space has a minimum 1-hour fire-resistance rating.

2. Where the room-side fire-resistance-rated membrane of the corridor is carried through to the underside of the floor or roof sheathing, deck or slab of a fire-resistance-rated floor or roof above, the ceiling of the corridor shall be permitted to be protected by the use of ceiling materials as required for a 1-hour fire-resistance-rated floor or roof system.

3. Where the corridor ceiling is constructed as required for the corridor walls, the walls shall be permitted to terminate at the upper membrane of such ceiling assembly.

4. The fire partition separating tenant spaces in a mall, complying with Section 402.7.2, are not required to extend beyond the underside of a ceiling that is not part of a fire-resistance-rated assembly. A wall is not required in attic or ceiling spaces above tenant separation walls.

5. Fireblocking or draftstopping is not required at the partition line in Group R-2 buildings that do not exceed four stories in height, provided the attic space is subdivided by draftstopping into areas not exceeding 3,000 square feet (279 m^2) or above every two dwelling units, whichever is smaller.

6. Fireblocking or draftstopping is not required at the partition line in buildings equipped with an automatic sprinkler system installed throughout in accordance with Section 903.3.1.1 or 903.3.1.2, provided that automatic sprinklers are installed in combustible floor/ceiling and roof/ceiling spaces.

*7. **[HCD 1]** Wall assemblies in two-family dwellings need not extend through attic spaces when the ceiling is protected by not less than $^5/_8$-inch (15.9 mm) Type X gypsum board and an attic draft stop constructed as specified in Section 717.3.1 is provided above and along the wall assembly separating the dwellings. The structural framing supporting the ceiling shall also be protected by not less than $^1/_2$ -inch (12.7 mm) gypsum board or equivalent.*

708.8 Joints. Joints made in or between fire partitions shall comply with Section 713.

***Exception: [HCD 1]** Fire-resistance-rated wall assemblies in two-family dwellings which extend to and are tight against the exterior wall, the ceiling as permitted in Section 708.4, or the underside of the roof sheathing.*

716.5.4 Fire Partitions. Ducts and air transfer openings that penetrate fire partitions shall be protected with listed fire dampers installed in accordance with their listing.

Exceptions: In occupancies other than Group H, fire dampers are not required where any of the following apply:

1. The partitions are tenant separation or corridor walls in buildings equipped throughout with an automatic sprinkler system in accordance with Section 903.3.1.1 or 903.3.1.2 and the duct is protected as a through penetration in accordance with Section 712.

2. Tenant partitions in covered mall buildings where the walls are not required by provisions elsewhere in the code to extend to the underside of the floor or roof deck above.

3. The duct system is constructed of approved materials in accordance with the ~~International~~ *California Mechanical Code* and the duct penetrating the wall complies with all of the following requirements:

3.1. The duct shall not exceed 100 square inches (0.06 m^2).

3.2. The duct shall be constructed of steel a minimum of 0.0217 inch (0.55 mm) in thickness.

3.3. The duct shall not have openings that communicate the corridor with adjacent spaces or rooms.

3.4. The duct shall be installed above a ceiling.

3.5. The duct shall not terminate at a wall register in the fire-resistance-rated wall.

3.6. A minimum 12-inch-long (305 mm) by 0.060-inch-thick (1.52 mm) steel sleeve shall be centered in each duct opening. The sleeve shall be secured to both sides of the wall and all four sides of the sleeve with minimum $1^1/_2$-inch by $1^1/_2$-inch by 0.060-inch (38 mm by 38 mm by 1.52 mm) steel retaining angles.

The retaining angles shall be secured to the sleeve and the wall with No. 10 (M5) screws. The annular space between the steel sleeve and the wall opening shall be filled with mineral wool batting on all sides.

716.6.1 Through Penetrations. In occupancies other than Groups I-2 and I-3, a duct constructed of approved materials in accordance with the ~~*International*~~ *California Mechanical Code* that penetrates a fire-resistance-rated floor/ceiling assembly that connects not more than two stories is permitted without shaft enclosure protection, provided a listed fire damper is installed at the floor line or the duct is protected in accordance with Section 712.4. For air transfer openings, see Exception 7 to Section 707.2.

Exception: A duct is permitted to penetrate three floors or less without a fire damper at each floor, provided it meets all of the following requirements:

1. The duct shall be contained and located within the cavity of a wall and shall be constructed of steel not less than 0.019 inch (0.48 mm) (26 gage) in thickness.

2. The duct shall open into only one dwelling or sleeping unit and the duct system shall be continuous from the unit to the exterior of the building.

3. The duct shall not exceed 4-inch (102 mm) nominal diameter and the total area of such ducts shall not exceed 100 square inches (0.065 m^2) in any 100 square feet (9.3 m^2) of floor area.

4. The annular space around the duct is protected with materials that prevent the passage of flame and hot gases sufficient to ignite cotton waste where subjected to ASTM E 119 time-temperature conditions under a minimum positive pressure differential of 0.01 inch (2.49 Pa) of water at the location of the penetration for the time period equivalent to the fire-resistance rating of the construction penetrated.

5. Grille openings located in a ceiling of a fire-resistance-rated floor/ceiling or roof/ceiling assembly shall be protected with a listed ceiling radiation damper installed in accordance with Section 716.6.2.1.

716.6.2 Membrane Penetrations. Ducts and air transfer openings constructed of approved materials in accordance with the ~~*International*~~ *California Mechanical Code* that penetrate the ceiling membrane of a fire-resistance-rated floor/ceiling or roof/ceiling assembly shall be protected with one of the following:

1. A shaft enclosure in accordance with Section 707.

2. A listed ceiling radiation damper installed at the ceiling line where a duct penetrates the ceiling of a fire-resistance-rated floor/ceiling or roof/ceiling assembly.

3. A listed ceiling radiation damper installed at the ceiling line where a diffuser with no duct attached penetrates the ceiling of a fire-resistance-rated floor/ceiling or roof/ceiling assembly.

716.6.3 Nonfire-Resistance-Rated Floor Assemblies. Duct systems constructed of approved materials in accordance with the ~~*International*~~ *California Mechanical Code* that penetrate nonfire-resistance-rated floor assemblies shall be protected by any of the following methods:

1. A shaft enclosure in accordance with Section 707.

2. The duct connects not more than two stories, the annular space around the penetrating duct is protected with an approved noncombustible material that resists the free passage of flame and the products of combustion.

3. The duct connects not more than three stories, the annular space around the penetrating duct is protected with an approved noncombustible material that resists the free passage of flame and the products of combustion and a fire damper is installed at each floor line.

Exception: Fire dampers are not required in ducts within individual residential dwelling units.

717.5 Combustible Materials in Concealed Spaces in Type I or II Construction. Combustible materials shall not be permitted in concealed spaces of buildings of Type I or II construction.

Exceptions:

1. Combustible materials in accordance with Section 603.

2. Combustible materials exposed within plenums complying with Section 602 of the ~~*International*~~ *California Mechanical Code*.

3. Class A interior finish materials classified in accordance with Section 803.

4. Combustible piping within partitions or shaft enclosures installed in accordance with the provisions of this code.

5. Combustible piping within concealed ceiling spaces installed in accordance with the ~~*International*~~ *California Mechanical Code* and the ~~*International*~~ *California Plumbing Code*.

6. Combustible insulation and covering on pipe and tubing, installed in concealed spaces other than plenums, complying with Section 719.7.

719.1 General. Insulating materials, including facings such as vapor retarders and vapor-permeable membranes, similar coverings, and all layers of single and multilayer reflective foil insulations, shall comply with the requirements of this section. Where a flame spread index or a smoke-developed index is specified in this section, such index shall be determined in accordance with ASTM E 84. Any material that is subject to an increase in flame spread index or smoke-developed index beyond the limits herein established through the effects of age, moisture, or other atmospheric conditions shall not be permitted.

Exceptions:

1. Fiberboard insulation shall comply with Chapter 23.

2. Foam plastic insulation shall comply with Chapter 26.

3. Duct and pipe insulation and duct and pipe coverings and linings in plenums shall comply with the ~~*International*~~ *California Mechanical Code*.

719.7 Insulation and Covering on Pipe and Tubing. Insulation and covering on pipe and tubing shall have a flame spread index of not more than 25 and a smoke-developed index of not more than 450.

Exception: Insulation and covering on pipe and tubing installed in plenums shall comply with the ~~*International*~~ *California Mechanical Code.*

~~703.5~~ 720.2.5 ~~[HCD 1 & 2]~~ Cellular Concrete [HCD 1 & HCD 2].

~~703.5.1~~ 720.2.5.1 ~~[HCD 1 & 2]~~ Use and Application [HCD 1 & HCD 2]. *Controlled-density cellular concrete, when used or applied, shall be in accordance with the use of materials in Bulletin No. 65 of the Federal Housing Administration, United States Department of Housing and Urban Development.*

Exceptions:

1. Regardless of the provisions of Subsections 3.2, 3.3, 3.4 and 3.6 in Section 3, Bulletin No. 65 provisions relating to proportioning, mixing and testing, in the following shall apply to this chapter.

1.1 Field-control weighings for control of the wet-unit weight shall be made. The design wet-unit weight for field control of the concrete shall be based on previously established data for the relation between the wet-unit weight and the air-dry unit weight at 28 days for the mix being placed. Field-control weighings for determining the wet-unit weight shall be made at the mixer discharge and at the point of deposit. There should be one pair of weighings per batch for batch-type mixers unless equipment is provided with scales allowing the operator to adequately weigh materials. For continuous weight- instrumented batch mixers, there should be one pair of weighings per 10 cubic

yards (7.65 m³). The gain in unit weight between the mixer discharge and point of deposit shall not exceed 5 percent. The wet-unit weight at the point of deposit of the concrete shall not exceed plus 5 percent of the design wet-unit weight. A variation exceeding plus 5 percent of the design wet-unit weight shall require a modification of the mix proportions, a change of materials, or a change in the mixing procedure.

1.2 When tests are required by the enforcing agency, they shall be performed in the following manner: Two test cylinders, for compressive strength tests, shall be made for each 8,000 square feet (743 m~~²~~²) of surface area placed. A minimum of two test cylinders shall be made each day. Each strength test result shall be the average of two cylinders from the same sample tested at 28 days or at a specified earlier date.

1.3 The minimum air-dry density shall be 90 pounds per cubic foot (1,440 kg/m³). The minimum design compressive strength shall be 1,000 psi (6890 kPa) when the curing procedure specified herein is applied. The minimum design compressive strength shall be 1,250 psi (8,619 kPa) if the slab is placed in a covered area of a building and a specified curing medium is not applied. The specified design compressive strength shall be increased 20 percent when the specified strength is greater than 1,000 psi (6,890 kPa) and the slab is placed in a covered area of a building and a specified curing medium is not applied.

1.4 The cellular concrete shall be sampled at the point of deposit in accordance with the applicable procedures of ASTM C 172, Sampling Fresh Concrete. Cylinder molds shall be either 3 inches by 6 inches (76 mm by 152 mm) or 6 inches by 12 inches (152 mm by 305 mm). Lightly tap the sides of the mold with a rubber hammer while filling the mold instead of rodding the mix. Moist cure the specimens for seven days at 73.4°F (40.8°C) plus or minus 3°F (1.7°C). At the age of seven days, remove the specimens from the moist condition and store in a temperature of 73.4°F (40.8°C) plus or minus 3°F (1.7°C) and a relative humidity of 50 plus or minus 10 percent for 21 days, remove and air dry until the time of test at 28 days. The compressive strength test shall be in accordance with ASTM C 39, Compressive Strength of Cylindrical Concrete Specimens. Determine the air-dry unit weight at 28 days.

2. Regardless of the provisions of Subsections 4.1 and 4.2 in Section 4, of Bulletin No. 65, relating to placing, finishing and curing, the following shall apply to these regulations:

2.1 The concrete shall be placed, finished and cured to produce a level, smooth surface. The concrete shall be placed in a single layer to a minimum thickness of 11/2 inches (38 mm). The deviation from a plan shall not exceed 1/4 inch (6 mm) in any 10 feet (3,048 mm). The final finish of the concrete shall be suitable for the application of the specified wear- resistant covering. Cracks wider than 1/8 inch (3 mm) shall be repaired.

2.2 Install a water-resistant membrane between wood or plywood subfloors and the cellular concrete to prevent leakage of the concrete and wetting of the subfloor. The membrane shall consist of waterproof paper or plastic sheets conforming to ASTM C 171, Sheet Materials for Curing Concrete, or Type 15 roofing felt conforming to ASTM D 226, D 250 or D 227, or Federal Specification UUB790, Building Paper Vegetable Fiber: (Kraft, Waterproofed, Water Repellent and Fire-resistant) Type 1, Grade B. The sheets shall be securely fastened to the subfloor.

3. Regardless of the provisions of Subsections 6.1 and 6.2 in Section 6, in Bulletin No. 65, relating to applicator qualifications and warranty, ~~in~~ these subsections are omitted from this chapter.

NOTE:
Authority cited: Health and Safety Code Sections 17040, 17921, 17922, 18300, 18865 and 19990; and Government Code Sections 12955.1 and 12955.1.1.
Reference: Health and Safety Code Sections 17000 through 17060, 17910 through 17990, 18620, 18630, 18640, 18670, 18690, 18691, 18873 through 18873.5 and 19960 through 19997; and Government Code Sections 12955.1 and 12955.1.1.

CHAPTER 7A
MATERIALS AND CONSTRUCTION METHODS FOR EXTERIOR WILDFIRE EXPOSURE

(Note: Adopt entire chapter without amendments.)

NOTE:
Authority cited: Health and Safety Code Sections 17040, 17921, 17922, 18300, 18865 and 19990; and Government Code Sections 12955.1 and 12955.1.1.
Reference: Health and Safety Code Sections 17000 through 17060, 17910 through 17990, 18620, 18630, 18640, 18670, 18690, 18691, 18873 through 18873.5 and 19960 through 19997; and Government Code Sections 12955.1 and 12955.1.1.

CHAPTER 8
INTERIOR FINISHES

(Note: Adopt entire chapter without amendments.)

NOTE:
Authority cited: Health and Safety Code Sections 17040, 17921, 17922, 18300, 18865 and 19990; and Government Code Sections 12955.1 and 12955.1.1.
Reference: Health and Safety Code Sections 17000 through 17060, 17910 through 17990, 18620, 18630, 18640, 18670, 18690, 18691, 18873 through 18873.5 and 19960 through 19997; and Government Code Sections 12955.1 and 12955.1.1.

CHAPTER 9
FIRE PROTECTION SYSTEMS

(Note: Adopt entire chapter with amendments.)

[F] 903.2.7 Group R. An automatic sprinkler system installed in accordance with Section 903.3 shall be provided throughout all buildings with a Group R fire area.

Exceptions:

1. Detached one- and two-family dwellings and multiple single-family dwellings (townhouses) not more than three stories above grade plane in height with a separate means of egress, unless specifically required by other sections of this code or by local ordinance.

2. Group U private garages accessory to a Group R-3 occupancy.

903.2.12.1 Ducts Conveying Hazardous Exhausts. Where required by the ~~*International*~~ *California Mechanical Code*, automatic sprinklers shall be provided in ducts conveying hazardous exhaust, or flammable or combustible materials.

903.3.5 Water Supplies. Water supplies for automatic sprinkler systems shall comply with this section and the standards referenced in Section 903.3.1. The potable water supply shall be protected against backflow in accordance with the requirements of this section and the ~~*International*~~ *California Plumbing Code*.

904.2.1 Commercial Hood and Duct Systems. Each required commercial kitchen exhaust hood and duct system required by the *International Fire Code* or the ~~*International*~~ *California Mechanical Code* to have a Type I hood shall be protected with an approved automatic fire-extinguishing system installed in accordance with this code.

904.11 Commercial cooking systems. The automatic fire-extinguishing system for commercial cooking systems shall be of a type recognized for protection of commercial cooking equipment and exhaust systems of the type and arrangement protected. Preengineered automatic dry- and wet-chemical extinguishing systems shall be tested in accordance with UL 300 and listed and labeled for the intended application. Other types of automatic fire-extinguishing systems shall be listed and labeled for specific use as protection for commercial cooking operations. The system shall be installed in accordance with this code, its listing and

the manufacturer's installation instructions. Automatic fire-extinguishing systems of the following types shall be installed in accordance with the referenced standard indicated, as follows:

1. Carbon dioxide extinguishing systems, NFPA 12.

2. Automatic sprinkler systems, NFPA 13.

3. Foam-water sprinkler system or foam-water spray systems, NFPA 16.

4. Dry-chemical extinguishing systems, NFPA 17.

5. Wet-chemical extinguishing systems, NFPA 17A.

Exception: Factory-built commercial cooking recirculating systems that are tested in accordance with UL 710B and listed, labeled and installed in accordance with Section 304.1 of the ~~*International*~~ *California Mechanical Code*.

908.6 Refrigerant Detector. Machinery rooms shall contain a refrigerant detector with an audible and visual alarm. The detector, or a sampling tube that draws air to the detector, shall be located in an area where refrigerant from a leak will concentrate. The alarm shall be actuated at a value not greater than the corresponding TLV-TWA values for the refrigerant classification indicated in the ~~*International*~~ *California Mechanical Code*. Detectors and alarms shall be placed in approved locations.

909.1 Scope and Purpose. This section applies to mechanical or passive smoke control systems when they are required by other provisions of this code. The purpose of this section is to establish minimum requirements for the design, installation and acceptance testing of smoke control systems that are intended to provide a tenable environment for the evacuation or relocation of occupants. These provisions are not intended for the preservation of contents, the timely restoration of operations or for assistance in fire suppression or overhaul activities. Smoke control systems regulated by this section serve a different purpose than the smoke- and heat-venting provisions found in Section 910. Mechanical smoke control systems shall not be considered exhaust systems under Chapter 5 of the ~~*International*~~ *California Mechanical Code*.

909.10.2 Ducts. Duct materials and joints shall be capable of withstanding the probable temperatures and pressures to which they are exposed as determined in accordance with Section 909.10.1. Ducts shall be constructed and supported in accordance with the ~~*International*~~ *California Mechanical Code*. Ducts shall be leak tested to 1.5 times the maximum design pressure in accordance with nationally accepted practices. Measured leakage shall not exceed 5 percent of design flow. Results of such testing shall be a part of the documentation procedure. Ducts shall be supported directly from fire-resistance-rated structural elements of the building by substantial, noncombustible supports.

Exception: Flexible connections (for the purpose of vibration isolation) complying with the ~~*International*~~ *California Mechanical Code*, that are constructed of approved fire-resistance-rated materials.

912.5 Backflow protection. The potable water supply to automatic sprinkler and standpipe systems shall be protected against backflow as required by the ~~*International*~~ *California Plumbing Code*.

NOTE:
Authority cited: Health and Safety Code Sections 17040, 17921, 17922, 18300, 18865 and 19990; and Government Code Sections 12955.1 and 12955.1.1.
Reference: Health and Safety Code Sections 17000 through 17060, 17910 through 17990, 18620, 18630, 18640, 18670, 18690, 18691, 18873 through 18873.5 and 19960 through 19997; and Government Code Sections 12955.1 and 12955.1.1.

CHAPTER 10
MEANS OF EGRESS

(Note: Adopt entire chapter with amendments)

GUARD ***([HCD 1]or GUARDRAIL).*** A building component or a system of building components located at or near the open sides of elevated walking surfaces that minimizes the possibility of a fall from the walking surface to a lower level.

1003.1 Applicability. The general requirements specified in Sections 1003 through 1012 shall apply to all three elements of the means of egress system, in addition to those specific requirements for the exit access, the exit and the exit discharge detailed elsewhere in this chapter.

~~***Notes:***~~ *(Section 1003.1, 2001 CBC)*

~~*1. **[For HCD 1 & HCD 1/AC]** For the application to R Occupancies see Chapter 1 and Sections 102.1.9 for HCD 1authority, 102.1.9.1 for HCD 1/AC authority, and Section 102.1.14 for SFM fire panic and safety.*~~

~~*2. **[For HCD 1/AC]** For accessibility requirements for covered multifamily dwellings, see Chapter 11A.*~~

~~*3. **[For HCD2]** For application see Chapter 1, Section 102.1.10 for authority and Section 102.1.14 for SFM fire panic and safety.*~~

~~*4. **[For HCD 2]** For accessibility requirements regarding public use and public accommodations, see Chapter 11B.*~~

~~***Note:***~~ *In addition to the requirements of this chapter, means of egress, which provide access to or egress from, buildings or facilities where accessibility is required for applications listed in Section 108.2.1.2 regulated by the Department of Housing and Community Development, or Section 109.1 regulated by the Division of the State Architect/Access Compliance, shall also comply with Chapter 11A ~~for covered multifamily dwellings~~ or ~~public housing, and~~ Chapter 11B ~~for public accommodations~~ as applicable.*

1003.3.4 Clear Width. Protruding objects shall not reduce the minimum clear width of accessible routes as required in ~~Section 1104~~ *Chapters 11A or Chapter11B, Section 1133B.8.6.*

1003.5 Elevation Change. Where changes in elevation of less than 12 inches (305 mm) exist in the means of egress, sloped surfaces shall be used. Where the slope is greater than one unit vertical in 20 units horizontal (5-percent slope), ramps complying with Section 1010 shall be used. Where the difference in elevation is 6 inches (152 mm) or less, the ramp shall be equipped with either handrails or floor finish materials that contrast with adjacent floor finish materials.

Exceptions:

1. A single step with a maximum riser height of 7 inches (178 mm) is permitted for buildings with occupancies in Groups F, H, R-2 and R-3, and Groups S and U at exterior doors not required to be accessible by ~~Chapter 11~~ *Chapters 11A or 11B*.

2. A stair with a single riser or with two risers and a tread is permitted at locations not required to be accessible by ~~Chapter 11~~ *Chapters 11A or 11B*, provided that the risers and treads comply with Section 1009.3, the minimum depth of the tread is 13 inches (330 mm) and at least one handrail complying with Section 1009.11 is provided within 30 inches (762 mm) of the centerline of the normal path of egress travel on the stair.

3. An aisle serving seating that has a difference in elevation less than 12 inches (305 mm) is permitted at locations not required to be accessible by ~~Chapter 11~~ *Chapters 11A or 11B*, provided that the risers and treads comply with Section 1024.11 and the aisle is provided with a handrail complying with Section

1024.13. Any change in elevation in a corridor serving nonambulatory persons in a Group I-2 occupancy shall be by means of a ramp or sloped walkway.

Any change in elevation in a corridor serving nonambulatory persons in a Group I-2 occupancy shall be by means of a ramp or sloped walkway.

1007.1 Accessible Means of Egress Required. Accessible means of egress shall comply with this section. Accessible spaces shall be provided with not less than one accessible means of egress. Where more than one means of egress is required by Sections 1015.1 or 1019.1 from any accessible space, each accessible portion of the space shall be served by ~~not less than two~~ accessible means of egress *in at least the same number as required by Sections 1015.1 or 1019.1. In addition to the requirements of this chapter, means of egress, which provide access to or egress from, buildings for persons with disabilities, shall also comply with the requirements of Chapters 11A or 11B as applicable.*

Exceptions:

1. Accessible means of egress are not required in alterations to existing buildings.

2. One accessible means of egress is required from an accessible mezzanine level in accordance with Sections 1007.3, 1007.4 or 1007.5 *and Chapters 11A or 11B as applicable.*

3. In assembly spaces with sloped floors, one accessible means of egress is required from a space where the common path of travel of the accessible route for access to the wheelchair spaces meets the requirements in Section 1025.8 *and Chapters 11A or 11B as applicable.*

1007.2 Continuity and components. Each required accessible means of egress shall be continuous to a public way and shall consist of one or more of the following components:

1. Accessible routes complying with ~~Section 1104~~ *Chapters 11A, Sections 1110A.1 and 1120A or Chapter 11B, Section~~s 1102B, 1114B, 1124B, 1133B.3, 1133B.5, 1133B.7 and 1133B.8.6~~ 1114B.1.2 as applicable*.

2. Stairways within vertical exit enclosures complying with Sections 1007.3, ~~and~~ 1020 *and Chapters 11A, Section 1123A or Chapter 11B, Section 1133B.4 as applicable.*

3. Exterior exit stairways complying with Sections 1007.3, ~~and~~ 1023 *and Chapter 11A, Section 1115A or Chapter 11B, Section 1133B.4 as applicable*.

4. Elevators complying with Section 1007.4 *and Chapter~~s~~ 11A, Section 1124A or Chapter 11B, Section 1116B.1 as applicable*.

5. Platform lifts complying with Section 1007.5 *and Chapters 11A,Section 1124A or Chapter 11B, Sections 1116B.2 and 1116B.3 as applicable*.

6. Horizontal exits complying with Section 1021.

7. Ramps complying with Section 1010 *and Chapter~~s~~ 11A, Sections 1114A and 1122A or Chapter 11B Section 1333B.5 as applicable*.

8. Areas of refuge complying with Section 1007.6.

Exceptions:

1. Where the exit discharge is not accessible, an exterior area for assisted rescue must be provided in accordance with Section 1007.8.

2. Where the exit stairway is open to the exterior, the accessible means of egress shall include either an area of refuge in accordance with Section 1007.6 or an exterior area for assisted rescue in accordance with Section 1007.8.

1007.3 Exit stairways. In order to be considered part of an accessible means of egress, an exit stairway shall have a width of 48 inches (1219 mm) minimum between handrails and shall either incorporate an area of refuge within an enlarged floor-level landing or shall be accessed from either an area of refuge complying with Section 1007.6 or a horizontal exit ~~*and shall comply with Chapters 11A or 11B as applicable.*~~ ***[HCD 1/AC]*** *In addition, exit stairways shall comply with Chapter 11A, Sections 1115A and 1123A or Chapter 11B, Section 1133B.4 as applicable.*

Exceptions:

1. Unenclosed exit stairways as permitted by Section 1020.1 are permitted to be considered part of an accessible means of egress.

2. The area of refuge is not required at unenclosed exit stairways as permitted by Section 1020.1 in buildings or facilities that are equipped throughout with an automatic sprinkler system installed in accordance with Section 903.3.1.1.

3. The clear width of 48 inches (1219 mm) between handrails is not required at exit stairways in buildings or facilities equipped throughout with an automatic sprinkler system installed in accordance with Sections 903.3.1.1 or 903.3.1.2.

4. The clear width of 48 inches (1219 mm) between handrails is not required for exit stairways accessed from a horizontal exit.

5. Areas of refuge are not required at exit stairways serving open parking garages.

1007.5 Platform Lifts. Platform (wheelchair) lifts shall not serve as part of an accessible means of egress, except where allowed as part of a required accessible route in ~~Section 1109.7, Items 1 through 9~~ *Chapter~~s~~ 11A, Section 1121A or Chapter 11B, Sections 1116B.2.1 through 1116B.2.4, as applicable.* Standby power shall be provided in accordance with Section 2702.2.6 for platform lifts permitted to serve as part of a means of egress.

1007.6.1 Size. Each area of refuge shall be sized to accommodate ~~one~~ *two* wheelchair space*s that are not less than* ~~of~~ 30 inches by 48 inches (762 mm by 1219 mm) *each. The total number of such 30-inch by 48-inch (762 mm by 1219 mm) spaces per story shall be not less than one for every 200 persons of calculated occupant load served by the area of refuge.* ~~for each 200 occupants or portion thereof, based on occupant load of the area o refuge and areas served by the area of refuge.~~ Such wheelchair spaces shall not reduce the required means egress width. Access to any of the required wheelchair spaces in an area of refuge shall not be obstructed by more than adjoining wheelchair space.

EXCEPTION: *The building official may reduce the minimum number of 30-inch by 48-inch (762 mm by 1219 mm) areas to one for each area for evacuation assistance on floors where the occupant load is less than 200.*

~~*1118A.2.4.1*~~***1007.6.3.1 Visible ~~and Audible~~ Communication Method.*** ~~*A method of two-way communication with both visible and audible communication shall be provided between each area of evacuation assistance and the primary entry.*~~ ***[HCD 1/AC]*** *A button complying with Section 1117B.6 in the area of ~~rescue assistance~~ refuge shall activate both a light in the area of ~~rescue assistance~~ refuge indicating that rescue has been requested and a light at the ~~primary entry~~ central control point indicating that rescue is being requested. A button at the ~~primary entry~~ central control point shall activate both a light at the ~~primary entry~~ central control point and a light in the area of ~~rescue assistance~~ refuge indicating that the request has been received.*

~~*A telephone with controlled access to a public telephone system or another method of two-way communication shall be provided between each area of refuge and the primary entry. The fire department may approve a location other than the primary entry.*~~

1007.6.5 Identification. Each door providing access to an area of refuge from an adjacent floor area shall be identified by a sign complying with ~~ICC A117.1~~ *Section 1117B.5 item 3*, stating: AREA OF REFUGE, and including the International Symbol of Accessibility. Where exit sign illumination is required by Section 1011.2, the area of refuge sign shall be illuminated. Additionally, tactile signage complying with ~~ICC A117.1~~ *Section 1117B.5 item 1* shall be located at each door to an area of refuge.

1007.7 Signage. At exits and elevators serving a required accessible space but not providing an approved accessible means of egress, signage shall be installed indicating the location of accessible means of egress. ***[HCD 1/AC]*** *Signs shall comply with Chapter 11A or Chapter 11B, Section 1117B.5.1 items 2 and 3, as applicable.*

1007.9 Alarms/Emergency Warning Systems/Accessibility. *If emergency warning systems are required, they shall activate a means of warning the hearing impaired. Emergency warning systems as part of the fire-alarm system shall be designed and installed in accordance with NFPA 72 as amended in Chapter 35.*

1008.1.1 Size of Doors. The minimum width of each door opening shall be sufficient for the occupant load thereof and shall provide a clear width of not less than 32 inches (813 mm). Clear openings of doorways with swinging doors shall be measured between the face of the door and the stop, with the door open 90 degrees (1.57 rad). Where this section requires a minimum clear width of 32 inches (813 mm) and a door opening includes two door leaves without a mullion, one leaf shall provide a clear opening width of 32 inches (813 mm). The maximum width of a swinging door leaf shall be 48 inches (1219 mm) nominal. Means of egress doors in a Group I-2 occupancy used for the movement of beds shall provide a clear width not less than 41.5 inches (1054 mm). The height of doors shall not be less than 80 inches (2032 mm).

Exceptions:

1. The minimum and maximum width shall not apply to door openings that are not part of the required means of egress in Group R-2 and R-3 occupancies.

2. Door openings to resident sleeping units in Group I-3 occupancies shall have a clear width of not less than 28 inches (711 mm).

3. Door openings to storage closets less than 10 square feet (0.93 m^2) in area shall not be limited by the minimum width.

4. Width of door leafs in revolving doors that comply with Section 1008.1.3.1 shall not be limited.

5. Door openings within a dwelling unit or sleeping unit shall not be less than 78 inches (1981 mm) in height.

6. Exterior door openings in dwelling units and sleeping units, other than the required exit door, shall not be less than 76 inches (1930 mm) in height.

7. In other than Group R-1 occupancies, the minimum widths shall not apply to interior egress doors within a dwelling unit or sleeping unit that is not required to be ~~an Accessible unit, Type A unit or Type B unit~~ *adaptable or accessible as specified in Chapters 11A or 11B as applicable*.

8. Door openings required to be accessible within ~~Type B~~ *dwelling* units shall have a minimum clear width ~~of 31.75 inches (806 mm)~~ *as specified in Chapters 11A or 11B as applicable* .

1008.1.4 Floor Elevation. There shall be a floor or landing on each side of a door. Such floor or landing shall be at the same elevation on each side of the door. Landings shall be level except for exterior landings, which are permitted to have a slope not to exceed 0.25 unit vertical in 12 units horizontal (2-percent slope).

Exceptions:

1. Doors serving individual dwelling units in Groups R-2 and R-3 where the following apply:

   1.1. A door is permitted to open at the top step of an interior flight of stairs, provided the door does not swing over the top step.

   1.2. Screen doors and storm doors are permitted to swing over stairs or landings.

2. Exterior doors as provided for in Section 1003.5, Exception 1, and Section 1018.2, which are not on an accessible route.

3. In Group R-3 occupancies not required to be ~~Accessible units, Type A units or Type B units~~ *adaptable or accessible,* the landing at an exterior doorway shall not be more than 7.75 inches (197 mm) below the top of the threshold, provided the door, other than an exterior storm or screen door, does not swing over the landing.

4. Variations in elevation due to differences in finish materials, but not more than 0.5 inch (12.7 mm).

~~5. Exterior decks, patios or balconies that are part of Type B dwelling units, have impervious surfaces and that are not more than 4 inches (102 mm) below the finished floor level of the adjacent interior space of the dwelling unit.~~

1008.1.6 Thresholds. Thresholds at doorways shall not exceed 0.75 inch (19.1 mm) in height for sliding doors serving dwelling units or 0.5 inch (12.7 mm) for other doors. Raised thresholds and floor level changes greater than 0.25 inch (6.4 mm) at doorways shall be beveled with a slope not greater than one unit vertical in two units horizontal (50-percent slope).

Exception: The threshold height shall be limited to 7.75 inches (197 mm) where the occupancy is Group R-2 or R-3; the door is an exterior door that is not a component of the required means of egress; the door, other than an exterior storm or screen door, does not swing over the landing or step; and the doorway is not on an accessible route as required by ~~Chapter 11~~ *Chapters 11A or 11B* ~~*as applicable*~~ and is not part of an ~~Accessible unit, Type A unit or Type B unit~~ *adaptable or accessible dwelling unit*.

1008.1.7 Door Arrangement. Space between two doors in series shall be 48 inches (1219 mm) minimum plus the width of a door swinging into the space. Doors in series shall swing either in the same direction or away from the space between doors.

Exceptions:

1. The minimum distance between horizontal sliding power-operated doors in a series shall be 48 inches (1219 mm).

2. Storm and screen doors serving individual dwelling units in Groups R-2 and R-3 need not be spaced 48 inches (1219 mm) from the other door.

3. Doors within individual dwelling units in Groups R-2 and R-3 *occupancies* other than ~~within Type A dwelling units~~ *adaptable or accessible dwelling units*.

1008.1.8.1 Hardware. Door handles, pulls, latches, locks and other operating devices on doors required to be accessible by ~~Chapter 11~~ *Chapters 11A, Section 1126A.6 or Chapter 11B Section 1133B.2.5* shall not require tight grasping, tight pinching or twisting of the wrist to operate.

1009.3 Stair Treads and Risers. Stair riser heights shall be 7 inches (178 mm) maximum and 4 inches (102 mm) minimum. Stair tread depths shall be 11 inches (279 mm) minimum. The riser height shall be measured vertically between the leading edges of adjacent treads. The tread depth shall be measured horizontally between the vertical planes of the foremost projection of adjacent treads and at a right angle to the tread's leading edge. Winder treads shall have a minimum tread depth of 11 inches (279 mm) measured at a right angle to the tread's leading edge at a point 12 inches (305 mm) from the side where the treads are narrower and a minimum tread depth of 10 inches (254 mm).

Exceptions:

1. Alternating tread devices in accordance with Section 1009.9.

2. Spiral stairways in accordance with Section 1009.8.

3. Aisle stairs in assembly seating areas where the stair pitch or slope is set, for sightline reasons, by the slope of the adjacent seating area in accordance with Section 1025.11.2.

4. In Group R-3 occupancies; within dwelling units in Group R-2 occupancies; and in Group U occupancies that are accessory to a Group R-3 occupancy or accessory to individual dwelling units in Group R-2 occupancies; the maximum riser height shall be 7.75 inches (197 mm); the minimum tread depth shall be 10

inches (254 mm); the minimum winder tread depth at the walk line shall be 10 inches (254 mm); and the minimum winder tread depth shall be 6 inches (152 mm). A nosing not less than 0.75 inch (19.1 mm) but not more than 1.25 inches (32 mm) shall be provided on stairways with solid risers where the tread depth is less than 11 inches (279 mm).

5. See the Section 3403.4 for the replacement of existing stairways. ~~*For applications listed in Section 108.2.1.1 regulated by the Department of Housing and Community Development,*~~ ***[HCD 1]*** *See Chapter 34, Section 3403.1, Exception 2 for additions, alterations, or repairs to existing buildings.*

1009.4 Stairway landings. There shall be a floor or landing at the top and bottom of each stairway. The width of landings shall not be less than the width of stairways they serve. Every landing shall have a minimum dimension measured in the direction of travel equal to the width of the stairway. Such dimension need not exceed 48 inches (1219 mm) where the stairway has a straight run.

Exceptions:

1. Aisle stairs complying with Section 1025.

2. Doors opening onto a landing shall not reduce the landing to less than one-half the required width. When fully open, the door shall not project more than 7 inches (178 mm) into a landing.

3. ***[HCD 1]*** *In Group R-3 occupancies, a floor or landing is not required at the top of an interior flight of stairs, including stairs in an enclosed garage, provided a door does not swing over the stairs.*

1009.10 Handrails. Stairways shall have handrails on each side and shall comply with Section 1012. Where glass is used to provide the handrail, the handrail shall also comply with Section 2407.

Exceptions:

1. Aisle stairs complying with Section 1025 provided with a center handrail need not have additional handrails.

2. Stairways within dwelling units, spiral stairways and aisle stairs serving seating only on one side are permitted to have a handrail on one side only.

3. Decks, patios and walkways that have a single change in elevation where the landing depth on each side of the change of elevation is greater than what is required for a landing do not require handrails.

4. ***[HCD 1]*** In Group R-3 occupancies, ~~a change in elevation consisting of a single riser at an entrance or egress door does not require handrails~~ *a continuous run of treads or flight of stairs with fewer than four risers does not require handrails*.

5. Changes in room elevations of only one riser within dwelling units and sleeping units in Group R-2 ~~and R-3~~ occupancies do not require handrails.

1010.1 Scope. The provisions of this section shall apply to ramps used as a component of a means of egress.

Exceptions:

1. Other than ramps that are part of the accessible routes providing access in accordance with ~~Sections 1108.2 through 1108.2.3 and 1108.2.5~~ *Chapters 11A or 11B*, ramped aisles within assembly rooms or spaces shall conform with the provisions in Section 1025.11.

2. Curb ramps shall comply with ~~ICC A117.1~~ *Chapters 11A or 11B as applicable.*

3. Vehicle ramps in parking garages for pedestrian exit access shall not be required to comply with Sections 1010.3 through 1010.9 when they are not an accessible route serving accessible parking spaces, other required accessible elements or part of an accessible means of egress.

1010.6.5 Doorways. Where doorways are located adjacent to a ramp landing, maneuvering clearances required ~~by ICC A117.1~~ *for accessibility* are permitted to overlap the required landing area *as specified in Chapters 11A or 11B*.

1010.9 Edge protection. Edge protection complying with Section 1010.9.1 or 1010.9.2 shall be provided on each side of ramp runs and at each side of ramp landings. ~~*For applications listed in Section 108.2.1.2 regulated by the Department of Housing and Community Development, see*~~ ***[HCD 1/AC]*** *See Chapter 11A, Sections 1114A.7 and 1122A.6 for curb and wheel guide requirements.*

Exceptions:

1. Edge protection is not required on ramps not required to have handrails, provided they have flared sides that comply with ~~the ICC A117.1~~ *Chapter 11A or Chapter 11B, Section 1127B.5* ~~curb ramp provisions~~.

2. Edge protection is not required on the sides of ramp landings serving an adjoining ramp run or stairway.

3. Edge protection is not required on the sides of ramp landings having a vertical dropoff of not more than 0.5 inch (13 mm) within 10 inches (254 mm) horizontally of the required landing area.

1013.3 Opening Limitations. Open guards shall have balusters or ornamental patterns such that a 4-inch diameter (102 mm) sphere cannot pass through any opening ~~up to a height of 34 inches (864 mm). From a height of 34 inches (864 mm) to 42 inches (1067 mm) above the adjacent walking surfaces, a sphere 8 inches (203 mm) in diameter shall not pass~~.

Exceptions:

1. The triangular openings formed by the riser, tread and bottom rail at the open side of a stairway shall be of a maximum size such that a sphere of 6 inches (152 mm) in diameter cannot pass through the opening.

2. At elevated walking surfaces for access to and use of electrical, mechanical or plumbing systems or equipment, guards shall have balusters or be of solid materials such that a sphere with a diameter of 21 inches (533 mm) cannot pass through any opening.

3. In areas that are not open to the public within occupancies in Group I-3, F, H or S, balusters, horizontal intermediate rails or other construction shall not permit a sphere with a diameter of 21 inches (533 mm) to pass through any opening.

4. In assembly seating areas, guards at the end of aisles where they terminate at a fascia of boxes, balconies and galleries shall have balusters or ornamental patterns such that a 4-inch-diameter (102 mm) sphere cannot pass through any opening up to a height of 26 inches (660 mm). From a height of 26 inches (660 mm) to 42 inches (1067 mm) above the adjacent walking surfaces, a sphere 8 inches (203 mm) in diameter shall not pass.

5. Within individual dwelling units and sleeping units in Group R-2 and R-3 occupancies, openings for required guards on the sides of stair treads shall not allow a sphere of 4.375 inches (111 mm) to pass through.

1014.2 Egress Through Intervening Spaces. Egress through intervening spaces shall comply with this section.

1. Egress from a room or space shall not pass through adjoining or intervening rooms or areas, except where such adjoining rooms or areas are accessory to the area served, are not a high-hazard occupancy and provide a discernible path of egress travel to an exit.

Exception: Means of egress are not prohibited through adjoining or intervening rooms or spaces in a Group H, S or F occupancy when the adjoining or intervening rooms or spaces are the same or a lesser hazard occupancy group.

2. Egress shall not pass through kitchens, storage rooms, closets or spaces used for similar purposes.

Exceptions:

1. Means of egress are not prohibited through a kitchen area serving adjoining rooms constituting part of the same dwelling unit or sleeping unit.

2. Means of egress are not prohibited through stockrooms in Group M occupancies when all of the following are met:

2.1. The stock is of the same hazard classification as that found in the main retail area;

2.2. Not more than 50 percent of the exit access is through the stockroom;

2.3. The stockroom is not subject to locking from the egress side; and

2.4. There is a demarcated, minimum 44-inch-wide (1118 mm) aisle defined by full or partial height fixed walls or similar construction that will maintain the required width and lead directly from the retail area to the exit without obstructions.

3. An exit access shall not pass through a room that can be locked to prevent egress.

4. ***[HCD 1]****Except for one- and two- family dwellings and townhouses means* ~~Means~~ of egress from dwelling units or sleeping areas shall not lead through other sleeping areas, toilet rooms or bathrooms.

5. ***[HCD 1]****For one- and two- family dwellings and townhouses means of egress is allowed to pass through rooms and intervening spaces except garages.*

1015.5 Refrigerated rooms or spaces. Rooms or spaces having a floor area of 1,000 square feet (93 m^2) or more, containing a refrigerant evaporator and maintained at a temperature below 68°F (20°C), shall have access to not less than two exits or exit access doors.

Travel distance shall be determined as specified in Section 1016.1, but all portions of a refrigerated room or space shall be within 150 feet (45 720 mm) of an exit or exit access door where such rooms are not protected by an approved automatic sprinkler system. Egress is allowed through adjoining refrigerated rooms or spaces.

Exception: Where using refrigerants in quantities limited to the amounts based on the volume set forth in the ~~*International*~~ *California Mechanical Code.*

1017.4.1 Corridor ceiling. Use of the space between the corridor ceiling and the floor or roof structure above as a return air plenum is permitted for one or more of the following conditions:

1. The corridor is not required to be of fire-resistance-rated construction;

2. The corridor is separated from the plenum by fire-resistance-rated construction;

3. The air-handling system serving the corridor is shut down upon activation of the air-handling unit smoke detectors required by the ~~*International*~~ *California Mechanical Code*.

4. The air-handling system serving the corridor is shut down upon detection of sprinkler waterflow where the building is equipped throughout with an automatic sprinkler system; or

5. The space between the corridor ceiling and the floor or roof structure above the corridor is used as a component of an approved engineered smoke control system.

NOTE:
Authority cited: Health and Safety Code Sections 17040, 17921, 17922, 18300, 18865 and 19990; and Government Code Sections 12955.1 and 12955.1.1.
Reference: Health and Safety Code Sections 17000 through 17060, 17910 through 17990, 18620, 18630, 18640, 18670, 18690, 18691, 18873 through 18873.5 and 19960 through 19997; and Government Code Sections 12955.1 and 12955.1.1.

~~**CHAPTER 11**~~
~~**ACCESSIBILITY**~~

(Note: This chapter will not be printed in the California Building Code.)

NOTE:
Authority cited: Health and Safety Code Sections 17040, 17921, 17922, 18300, 18865 and 19990; and Government Code Sections 12955.1 and 12955.1.1.
Reference: Health and Safety Code Sections 17000 through 17060, 17910 through 17990, 18620, 18630, 18640, 18670, 18690, 18691, 18873 through 18873.5, and 19960 through 19997; and Government Code Section 12955.1, 12955.1.1.

CHAPTER 11A
HOUSING ACCESSIBILITY

(Note: Adopt the entire chapter with amendments.)

Division I — APPLICATION, GENERAL PROVISIONS, AND DEFINITIONS

Division I Table of Contents

Section 1101A Application
Section 1102A Building Accessibility
Section 1103A Design and Construction
Section 1104A Group R Occupancies
Section 1105A Group U Occupancies
Section 1106A Site and Building Characteristics
Section 1107A Definitions

SECTION 1101A — APPLICATION

1101A.1 Scope. *The application and authority of this chapter are identified and referenced in Sections ~~101.17.9.1~~ 108.2.1.2 and 1102A for the Department of Housing and Community Development. Applicable sections are identified in the Matrix Adoption Tables of this code under the abbreviation HCD 1/AC.The provisions of this chapter shall apply to the following:*

1. All newly-constructed covered multifamily dwellings.

2. New common use spaces serving existing covered multifamily dwellings.

3. Additions to existing buildings, where the addition alone meets the definition of a covered multifamily dwelling.

4. Common-use areas serving covered multifamily dwellings.

These building standards generally do not apply to public accommodations such as hotels and motels. Public use areas, public accommodations, and housing which is publicly funded as defined in Chapter 2, Chapter 11A, and Chapter 11B of this Code are subject to provisions of the Division of the State Architect (DSA/AC) and are referenced in Section ~~101.17.11~~ 109.1.1.

SECTION 1102A — BUILDING ACCESSIBILITY

1102A.1 Where Required. *Buildings or portions of buildings and facilities within the scope of this chapter shall be accessible to persons with disabilities. Each building on a building site shall be considered separately when determining the requirements contained in this chapter, except when calculating the number of units which must comply with Section 1102A.3.1. Dwelling units within a single structure separated by firewalls do not constitute separate buildings*

Newly-constructed covered multifamily dwellings as defined in this chapter, include, but are not limited to, the following:

1. Apartment buildings with three or more dwelling units including timeshare apartments not considered a place of public accommodation or transient lodging as defined in Health and Safety Code Section 19955 (a),and Chapter 2 of the California Building Code.

2. Condominiums with four or more dwelling units including timeshare condominiums not considered a place of public accommodation or transient lodging as defined in Health and Safety Code Section 19955 (a),and Chapter 2 of the California Building Code.

3. Lodging houses, as defined in Chapter 2 of the California Building Code, used as a residence with more than three but not more than five guest rooms.

4. Congregate residences, as defined in Chapter 2 of the California Building Code.

Dwellings with three or more efficiency units, as defined in Chapter 2 of this code, or Section 17958.1 of the California Health and Safety Code.

5. Shelters for homeless persons, not otherwise subject to the disabled access provisions of the Division of the State Architect, Access Compliance (DSA/AC).

6. Dormitories, as defined in Chapter 2 of this code, with three or more guest rooms as defined in Chapter 2 of the California Building Code.

7. Timeshare dwellings with three or more units, not considered a place of public accommodations or transient lodging as defined in Health and Safety Code Section 19955 (a),and Chapter 2 of the California Building Code.

8. Other Group R Occupancies in covered multifamily dwellings which are regulated by the Office of the State Fire Marshal. See Section ~~101.17.14~~ 111.

10. Housing which is publicly funded as defined in Chapter 2 of this code are subject to provisions of the Division of the State Architect (DSA/AC). See Section 1111.B.5.

1102A.2 Existing Buildings. *The building standards contained in this chapter do not apply to the alteration, repair, rehabilitation or maintenance of Group R Occupancies constructed for first occupancy prior to March 13, 1991. Housing which is publicly funded as defined in Chapter 2 of this code are subject to provisions of the Division of the State Architect (DSA/AC). See Section 1111.B.5.*

Covered multifamily dwellings shall be maintained in compliance with the accessibility standards in effect at the time of construction. Apartments constructed prior to March 13, 1991 shall be maintained in compliance with the accessibility standards in effect at the time of construction.

Additions to Group R occupancies shall be subject to the requirements of this chapter, provided the addition, when considered alone, meets the definition of a covered multifamily dwelling, as defined in this chapter. New common use spaces serving existing covered multifamily dwellings shall be subject to the requirements of this chapter.

Note: *For all existing public use areas, public accommodations, and housing which is publicly funded see Chapter 11B, Division IV, Section 1134B for provisions of the Division of the State Architect, Access Compliance (DSA/AC).*

1102A.3 Multistory Dwellings.

1102A.3.1 Multistory Apartment or Condominium Dwellings in Buildings with No Elevator. *This section shall apply to multistory dwelling units on the ground floor of buildings without elevators for which an application for a construction permit is submitted on or after July 1, 2005.*

Exception: *Carriage units as defined in Section 1102A.3-C and regulated only by the Department of Housing and Community Development as referenced in Section ~~101.17.9.1~~ 108.2.1.2*

At least ten percent but not less than one of the multistory dwellings in apartment buildings with three or more dwelling units and/or condominiums with four or more dwelling units shall comply with the following:

1. The primary entry to the dwelling unit shall be on an accessible route unless exempted by site impracticality tests in Section 1150A.

2. At least one powder room or bathroom shall be located on the primary entry level, served by an accessible route and shall comply with the provisions in Division IV.

3. All rooms or spaces located on the primary entry level shall be served by an accessible route and shall comply with the provisions in Division IV. Rooms and spaces located on the primary entry level and subject to this chapter may include but are not limited to kitchens, powder rooms, bathrooms, living rooms, bedrooms, or hallways.

4. Common use areas covered by this section shall be accessible as required by this chapter. Public use areas as defined in Chapter 2, Chapter 11A, and Chapter 11B of this code are subject to provisions of the Division of the State Architect (DSA/AC) and are referenced in Section ~~101.17.11~~ 109.1.1.

The minimum number of multifamily dwelling units which must comply with this section shall be calculated using the total number of all multistory dwelling units in buildings on a site which are subject to this section. Any fraction thereof shall be rounded to next highest whole number.

1102A.3.2 Multistory Dwelling Units in Buildings with One or More Elevators. *Multistory dwelling units, i.e., townhouse and condominium-type construction, contained in buildings with elevators shall comply with this section. For multistory dwelling units in buildings with elevators, the story of the unit that is served by the building elevator is considered a ground floor and the primary entry floor to the unit.*

1. All rooms and spaces located on the primary entry floor shall comply with the following: At least one powder room or bathroom shall be located on the primary entry level.

2. All rooms or spaces located on the primary entry level shall be served by an accessible route and shall comply with Division IV.

1102A.4 Participation Areas. *Access shall be provided to elements listed in Section 1104B.4.3, "Participation areas".*

1102A.5 Swimming Pools. *Swimming pools and spas required to be accessible shall comply with the provisions of Section 1141A.*

1102A.6 Temporary Restrictions. *During periods of partial or restricted use of a building or facility, the entrances used for primary access shall be accessible to and usable by persons with disabilities.*

SECTION 1103A — DESIGN AND CONSTRUCTION

1103A.1 General.

1103A.1.1 *When buildings are required to be accessible, they shall be designed and constructed as provided in this chapter.*

Note: *Public use areas, public accommodations, and housing which is publicly funded as defined in Chapter 2, Chapter 11A, and Chapter 11B of this code are subject to provisions of the Division of the State Architect (DSA/AC) and are referenced in Section ~~101.17.11~~ 109.1.1.*

SECTION 1104A — GROUP R OCCUPANCIES

1104A.1 General. *All ground-floor dwelling units in nonelevator buildings shall be adaptable and on an accessible route, unless an accessible route is not required as determined by site impracticality provisions in Section 1150A. For buildings with elevators, see Section 1106A.*

Multistory dwellings units shall comply with Section1102A.3.

1104A.2 Ground Floors Above Grade. *Where the first floor containing dwelling units in a building is above grade, all units on that floor shall be served by an accessible route. This floor will be considered a ground floor and all dwelling units are considered covered multifamily dwelling units.*

Exception: *Carriage units as defined in Section 1102A.3-C and regulated only by the Department of Housing and Community Development as referenced in Section ~~101.17.9.1~~ 108.2.1.2*

Multistory dwellings units shall comply with Section1102A.3.

SECTION 1105A — GROUP U OCCUPANCIES

1105A.1 General. *Group U, Division 1, private garages which are accessory to covered multifamily dwelling units, shall be accessible as required in Section 1109A. Group U, Division 1, private garages include individual garages and multiple individual garages grouped together.*

SECTION 1106A — SITE AND BUILDING CHARACTERISTICS

1106A.1 General. *Covered multifamily dwellings with elevators shall be designed and constructed to provide at least one accessible entrance on an accessible route, regardless of terrain or unusual characteristics of the site. Covered multifamily dwellings without elevators shall be designed and constructed to provide at least one accessible entrance on an accessible route unless terrain or unusual characteristics of the site prevent an accessible route based on the conditions listed below:*

1. Accessible Entrance. Regardless of site considerations described in Section 1150A, an accessible entrance on an accessible route is required when there is an elevator connecting the parking area with the dwelling units on a ground floor. (In this case, those dwelling units on the ground floor served by an elevator, and at least one of each type of public- and common-use areas, would be subject to these requirements.)

2. Elevator Building. When a building elevator or elevators are provided as a means of access to dwelling units other than dwelling units on a ground floor (see Section 1104A.2), the building is an elevator building. All dwelling units become covered multifamily dwellings in that building. The elevator in that building must provide accessibility to all dwelling units in the building, regardless of the slope of the natural terrain. For multistory dwelling units in building with one or more elevators see Section 1102A.3.2.

Note: *Where a building elevator is provided only as means of creating an accessible route to covered multifamily dwelling units on a ground floor, the building is not considered to be an elevator building, only dwelling units located on the ground floor shall be required to comply with this Chapter.*

3. Elevated Walkway. *When an elevated walkway is planned between a building entrance and a vehicular or pedestrian arrival point, and the planned walkway has a slope no greater than 10 percent (1 unit vertical in 10 units horizontal), the floor being served by the elevated walkway becomes a ground floor and accessibility to all dwellings on that ground floor is required.*

Note: *Since the planned walkway meets the 10% slope criterion, it is required to provide an accessible route to the entrance, and the slope of the walkway must be reduced to 1 unit vertical in 12 units horizontal (8.33% slope) maximum.*

1106A.2 Site Impracticality. *For tests to determine site impracticality due to terrain considerations in non-elevator buildings, see Section 1150A.*

SECTION 1107A — DEFINITIONS

For the purpose of this chapter, certain terms are defined as follows:

1107A.1-A

ACCESSIBLE *for covered multifamily dwellings is the public- or common-use areas of the building that can be approached, entered and used by persons with disabilities.*

ACCESSIBLE ROUTE *is a continuous and unobstructed path connecting all accessible elements and spaces in a building or within a site that can be negotiated by a person with a disability using a wheelchair, and that is also safe for and usable by persons with other disabilities. Interior accessible routes may include corridors, hallways, floors, ramps, elevators, and lifts. Exterior accessible routes may include parking access aisles, curb ramps, crosswalks at vehicular ways, walks, ramps, and lifts.*

ACCESSIBILITY *is the combination of various elements in a building or area which allows access, circulation and the full use of the building and facilities by persons with disabilities.*

ADAPTABLE DWELLING UNIT *is an accessible dwelling unit within a covered multifamily building as designed with elements and spaces allowing the dwelling unit to be adapted or adjusted to accommodate the user. See Division IV.*

ASSISTIVE DEVICE *is an aid, tool or instrument used by persons with disabilities to assist in activities of daily living.*

AUTOMATIC DOOR *is a door equipped with a power-operated mechanism and controls that open and close the door automatically upon receipt of a momentary actuating signal. The switch that begins the automatic cycle may be a photoelectric device, floor mat, or manual switch.*

1107A.2-B

BATHROOM *is, for the purposes of this chapter, a room which includes a water closet (toilet), lavatory (sink), and/or a bathtub and/or a shower. It does not include single-fixture facilities or those with only a water closet and lavatory. It does include a compartmented bathroom. A compartmented bathroom is one in which the fixtures are distributed among interconnected rooms. A compartmented bathroom is considered a single unit and is subject to the requirements of this chapter.*

BUILDING ENTRANCE ON AN ACCESSIBLE ROUTE *is an accessible entrance to a building that is connected by an accessible route to public transportation stops, to parking or passenger loading zones, or to public streets or sidewalks, if available.*

1107A.3-C

CARRIAGE UNIT. *A dwelling unit with living space on one or more floors immediately above a Group U, Division 1, private garage or garages. The footprint of the garage or garages is used as the footprint for the remaining floor or floors of the units above and the garage level contains no habitable space.*

Note: *Dwelling units located over a common garage shall not be considered carriage units.*

COMMON USE AREAS *are private use areas within multifamily residential facilities where the use of these areas are limited exclusively to owners, residents, and their guests. The areas may be defined as rooms or spaces or elements inside or outside of a building.*

COVERED MULTIFAMILY DWELLINGS *are dwelling units in buildings consisting of 3 or more dwelling units or 4 or more condominium units. Covered Multifamily Dwellings include dwelling units listed in Section 1102A.1. Dwelling units within a single structure separated by firewalls do not constitute separate buildings.*

Note: *For buildings or complexes containing publicly funded dwelling units, see Chapter 11B, Section 1111B.5 for provisions of the Division of the State Architect, Access Compliance (DSA/AC).*

CROSS SLOPE *is the slope that is perpendicular to the direction of travel.*

CURB CUT *is an interruption of a curb at a pedestrian way, which separates surfaces that are substantially at the same elevation.*

CURB RAMP *is a sloping pedestrian way, intended for pedestrian traffic, which provides access between a walk or sidewalk and a surface located above or below an adjacent curb face.*

1107A.4-D

DETECTABLE WARNING *is a standardized surface or feature built into or applied to walking surfaces or other elements to warn visually impaired persons of hazards in the path of travel. Only approved DSA/AC detectable warning products and directional surfaces shall be installed as provided in the CCR, Title 24, Part 1 Articles 2, 3, and 4. Refer to CCR, Title 24, Part 12, Chapter 12-11A and B for building and facilities access specifications for product approval for detectable warning products and directional surfaces.*

Note: *Detectable warning products and directional surfaces installed after January 1, 2001, shall be evaluated by an independent entity, selected by the Department of General Services, Division of the State Architect – Access Compliance, for all occupancies, including transportation and other outdoor environments, except that when products and surfaces are for use in residential housing, evaluation shall be in consultation with the Department of Housing and Community Development. See Government Code Section 4460.*

DWELLING UNIT *is a single unit of residence for a family of one or more persons. Examples of dwelling units covered by this chapter include condominiums, an apartment unit within an apartment building, and other types of dwellings in which sleeping accommodations are provided but toileting or cooking facilities are shared by occupants of more than one room or portion of the dwelling. Examples of the latter include dormitory rooms and sleeping accommodations in shelters intended for occupancy as residences for homeless persons.*

1107A.5-E

EQUIVALENT FACILITATION *is an alternate means of complying with the literal requirements of these standards and specifications that provides access consistent with the purpose of these standards and specifications.*

Notes: *1. See Section ~~101.2~~ 108.1, Purpose.*

2. In determining equivalent facilitation, consideration shall be given to means that provide for the maximum independence of persons with disabilities while presenting the least risk of harm, injury or other hazard to such persons or others.

1107A.6-F

FACILITY (or FACILITIES) *is a building, structure, room, site, complex or any portion thereof, that is built, altered, improved or developed to serve a particular purpose.*

1107A.7-G

GRAB BAR *is a bar for the purpose of being grasped by the hand for support.*

GROUND FLOOR *is the floor of a building with a building entrance on an accessible route. A building may have one or more ground floors.*

1107A.8-H

~~***HANDRAIL*** *is a device to be used as a hand hold.*~~

1107A.9-I

INDEPENDENT ENTITY See Chapter 2, Section 210-I.

INTERNATIONAL SYMBOL OF ACCESSIBILITY *is that symbol adopted by Rehabilitation International's 11th World Congress for the purpose of indicating that buildings and facilities are accessible to persons with disabilities. See Chapter 11A, Figure 11A-1A*

1107A.10-J *(No definitions)*

1107A.11-K

KICK PLATE *is an abrasion-resistant plate affixed to the bottom portion of a door to prevent a trap condition and protect its surface.*

1107A.12-L

LEVEL AREA *is a specified surface that does not have a slope in any direction exceeding 1/4 inch (6.4 mm) in 1 foot (305 mm) from the horizontal (2.083 percent gradient).*

LIFT, SPECIAL ACCESS. *See "special access lifts."*

1107A.13-M

MARKED CROSSING *is a crosswalk or other identified marked path intended for pedestrian use in crossing a vehicular way.*

MULTISTORY DWELLING UNIT *is a dwelling unit with finished living space located on one floor and the floor or floors immediately above or below it.*

1107A.14-N

NEWLY CONSTRUCTED *is a building that has never before been used or occupied for any purpose.*

NOSE, NOSING, *is that portion of a tread projecting beyond the face of the riser immediately below.*

1107A.15-O

OPEN RISER *is the air space between a tread projecting beyond the face of the riser immediately below.*

1107A.16-P

PASSAGE DOOR *is a door other than an exit door through which persons may traverse.*

PEDESTRIAN *is an individual who moves within walking areas with or without the use of walking-assistive devices such as crutches, leg braces, wheelchairs, etc.*

PEDESTRIAN RAMP *is a sloping accessible route intended for pedestrian traffic and is differentiated from a curb ramp.*

PEDESTRIAN WAY *is a route by which a pedestrian may pass.*

PERSONS WITH DISABILITIES. *For purposes of this Chapter, "persons with disabilities" includes, but is not limited to, any physical or mental disability as defined in Government Code Section 12926.*

POWDER ROOM *is a room containing a water closet (toilet) and lavatory (sink), and which is not defined as a bathroom in Section 1107A.2-B.*

PRIMARY ENTRY *is the principal entrance through which most people enter the building, as designated by the building official.*

PRIMARY ENTRY LEVEL *is the floor or level of the building on which the primary entry is located.*

PUBLIC ACCOMMODATION *See Chapter 2, Section 217-P*

PUBLIC-USE AREAS *means interior or exterior rooms or spaces of a building that are made available to the general public and does not include Common Use Areas as defined in Section 1107A.3-C. Public Use Areas may be provided at a building that is privately or publicly owned.*

1107A.17-Q *(No definitions)*

1107A.18-R

RAMP. *See "Pedestrian Ramp," Section 1107A.16-P.*

RISER *is the vertical distance from the top of a tread to the top of the next higher tread.*

1107A.19-S

SIDEWALK *See "Sidewalk", Chapter 2, Section 220-S*

SLEEPING ACCOMMODATIONS *are rooms in which people may sleep; for example, dormitory and hotel or motel guest rooms or suites.*
SLOPE *is the relative steepness of the land between two points and is calculated as follows:*

The horizontal distance and elevation change between the two points (e.g., an entrance and a passenger loading zone). The difference in elevation is divided by the distance and the resulting fraction is multiplied by 100 to obtain the percentage of slope.

> *For example: if a principal entrance is 10 feet (3048 mm) from a passenger loading zone, and the principal entrance is raised 1 foot (305 mm) higher than the passenger loading zone, then the slope is 1/10 x 100 = 10 percent.*

SPECIAL ACCESS LIFT *is a hoisting and lowering mechanism equipped with a car or platform, or support which serves two landings of a building or structure and is designed to carry a passenger or passengers and/or luggage or other material a vertical distance as may be allowed by Section 1124A.11.*

1107A.20-T

TOEBOARD *is a vertical barrier erected along the open edges of floor openings or floor holes, platforms and runways.*

TOWNHOUSE *is a multistory dwelling unit.*

TRANSIENT LODGING *is a building, facility, or portion thereof, available to the public as an inn, hotel, motel, timeshare, or place where one or more dwelling units or sleeping accommodations are provided for transient guests, excluding inpatient medical care facilities and lodging houses with five or less guest rooms. Transient lodging may include but is not limited to, resorts, group homes, and dormitories.*

TREAD *is the horizontal member of a step.*

TREAD DEPTH *is the horizontal distance from front to back of tread, including nosing when used.*

TREAD RUN *is the horizontal distance from the leading edge of a tread to the leading edge of an adjacent tread.*

1107A.21-U *(No definitions)*

1107A.22-V

VEHICULAR OR PEDESTRIAN ARRIVAL POINTS *are public or resident parking areas, public transportation stops, passenger loading zones, and public streets or sidewalks.*

1107A.23-W

WALK *is a surfaced pedestrian way not located contiguous to a street used by the public. (See Section 220-S definition for "sidewalk.")*

WHEELCHAIR *~~is a chair mounted on wheels to be propelled by its occupant manually or with the aid of electric power, of a size and configuration conforming to the recognized standard models of the trade~~ See "Wheelchair", Chapter 2, Section 202.*

1107A.24-X *(No definitions)*

1107A.24-Y *(No definitions)*

1107A.24-Z *(No definitions)*

Division II — EXTERIOR FACILITIES

Division II Table of Contents

Section 1108A General Requirements for Accessible Parking, and Exterior Routes of Travel
Section 1109A Parking Facilities
Section 1110A Exterior Routes of Travel
Section 1111A Changes in Level on Accessible Routes
Section 1112A Curb Ramps on Accessible Routes
Section 1113A Walks and Sidewalks on an Accessible Route
Section 1114A Exterior Ramps and Landings on Accessible Routes
Section 1115A Exterior Stairways along Accessible Routes
Section 1116A Hazards on Accessible Routes

SECTION 1108A — GENERAL REQUIREMENTS FOR ACCESSIBLE PARKING, AND EXTERIOR ROUTES OF TRAVEL

Notes: *1. In addition to provisions of this Division, exterior routes of travel that provide access to, or egress from, buildings for persons with disabilities shall also comply with Chapter 10.*

2. Public use areas, public accommodations, and housing which is publicly funded as defined in Chapter 2, Chapter 11A, and Chapter 11B of this code are subject to provisions of the Division of the State Architect (DSA/AC) and are referenced in Section ~~101.17.11~~ 109.1.1.

SECTION 1109A — PARKING FACILITIES

1109A.1 Accessible Parking Required. *Each parking facility provided for covered multifamily dwellings and facilities (e.g., swimming pools, club houses, recreation areas, and laundry rooms) that serve covered multifamily dwellings shall provide accessible parking as required by this section.*

1109A.2 Parking Facilities. *Parking facilities shall include, but not be limited to, the following:*

1. Garages.

2. Private garages (see Section 1105A for the application of building standards for accessibility).

3. Carports.

4. Off-street parking (parking lots / spaces).

1109A.2.1 Private Garages. *Group U, Division 1, private garages which are accessory to covered multifamily dwelling units, shall be accessible as required in Section 1109A. Group U, Division 1, private garages include individual garages and multiple individual garages grouped together.*

> ***Exception:*** *A private garage attached to and which directly serves a single covered multifamily dwelling unit is an accessible garage if a person with a disability can exit the dwelling unit's accessible entry door by an accessible route and enter the garage from the driveway. The provisions in Section 1109A shall not apply.*

1109A.3 Required Accessible Parking Spaces. *Accessible parking spaces shall be provided at a minimum rate of 2 percent of the covered multifamily dwelling units. At least one space of each type of parking facility shall be made accessible even if the total number exceeds 2 percent. When assigned parking is provided, signage as required by Section 1109A.8.8 shall not be required.*

1109A.4 Assigned Accessible Parking Spaces. *When assigned parking spaces are provided for a resident or a group of residents, at least 2 percent of the assigned parking spaces serving covered multifamily dwelling units shall be accessible in each type of parking facility. At least one space of each type of parking facility shall be made accessible even if the total number exceeds 2 percent. When assigned parking is provided, signage as required by Section 1109A.8.8 shall not be required.*

1109A.5 Unassigned and Visitor Parking Spaces. *When parking is provided for covered multifamily dwellings and is not assigned to a resident or a group of residents at least 5 percent of the parking spaces shall be accessible and provide access to grade-level entrances of covered multifamily dwellings and facilities (e.g., swimming pools, club houses, recreation areas, and laundry rooms) that serve covered multifamily dwellings. Accessible parking spaces shall be provided with signage as required by Section 1109A.8.8. Such signage shall not be blocked from view by a vehicle parked in the space.*

1109A.6 Requests for Accessible Parking Spaces. *When assigned parking is provided, designated accessible parking for the dwelling unit shall be provided on request of residents with disabilities on the same terms and with the full range of choices (e.g., off-street parking, carport or garage) that are available for other residents.*

1109A.7 Location of Accessible Parking Spaces. *The location of accessible parking spaces shall comply with the following:*

1. Accessible parking spaces shall be located on the shortest possible accessible route to an accessible building, or covered multifamily dwelling unit entrance. All van accessible spaces may be grouped on one level of a parking facility.

2. When parking facilities are located adjacent to a building with multiple accessible entrances, accessible parking spaces shall be dispersed and located near the accessible building entrances.

3. When practical, the accessible route shall not cross lanes for vehicular traffic. When crossing vehicle traffic lanes is necessary, the accessible route shall be designated and marked as a crosswalk.

4. Parking facilities that do not serve a particular building shall have accessible parking spaces located on the shortest possible accessible route to an accessible pedestrian entrance of the parking facility.

5. Accessible parking spaces shall be located so that persons with disabilities are not compelled to wheel or walk behind parked cars other than their own.

> ***Exception:*** *When the enforcement agency determines that compliance with this section or providing equivalent facilitation would create an unreasonable hardship, parking spaces may be provided which would require a person with physical disabilities to wheel or walk behind other than accessible parking spaces.*

1109A.8 Design and Construction. *Accessible parking required by this section shall be designed and constructed in accordance with Section 1109A.*

1109A.8.1 Vertical Clearances. *Where required to be accessible, all entrances into, and vertical clearances within parking facilities shall have a minimum vertical clearance of 8 feet 2 inches (2489 mm) from the floor to the lowest projection from the ceiling.*

1109A.8.2 Arrangement of Parking Spaces. *Parking spaces shall be arranged to comply with the following:*

1. In each parking area, a bumper or curb shall be provided and located to prevent encroachment of cars over the required width of walkways.

2. Ramps, including curb ramps, shall not encroach into any accessible parking space or the adjacent loading and unloading access aisle.

1109A.8.3 Slope of Accessible Parking Spaces. *Surface slopes of accessible parking spaces shall be the minimum possible and shall not exceed 1/4 inch (6.35 mm) per foot (2.083% gradient) in any direction.*

1109A.8.4 Accessible Parking Space Size. *Accessible parking spaces shall comply with Sections 1109A.8.5.and 1109A.8.6.*

1109A.8.5 Accessible Single Parking Space*. Where accessible single spaces are provided, they shall be constructed in accordance with the following:*

1. Single spaces shall be 14 feet (4267 mm) wide and lined to provide a 9 foot (2743 mm) wide parking area and a 5 foot (1524 mm) wide loading and unloading access aisle on the passenger side of the vehicle (See Figure 11A-2B) with the vehicle parked in the forward position.

2. When more than one space is provided. Two 9 foot (2743 mm) wide parking spaces may be lined on each side of a 5 foot (1524 mm) wide loading and unloading access aisle. (See Figure 11A-2A, and 11A-2C).

3. The minimum length of each parking space shall be 18 feet (5486 mm).

4. The words "NO PARKING" shall be painted on the ground within each 5 foot (1524 mm) wide loading and unloading access aisle. This notice shall be painted in white letters no less than 12 inches (305 mm) high and located so that it is visible to traffic enforcement officials. (See Figures 11A-2A, 11A-2B, and 11A-2C).

1109A.8.6 Van Accessible Parking Space. *One in every eight accessible spaces, but not less than one, shall be van accessible and shall be constructed in accordance with the following:*

1. Each space shall be served by a loading and unloading access aisle at least 8 feet (2438 mm) wide, placed on the passenger side with the vehicle parked in the forward position.

2. The minimum length of each space shall be 18 feet (5486 mm).

3. Each space shall be designated "van accessible" as required by 1109A.8.8.

4. All van accessible spaces may be grouped on one level of a parking facility.

5. The words "NO PARKING" shall be painted on the ground within each 8 foot (2438 mm) wide loading and unloading access aisle. This notice shall be painted in white letters no less than 12 inches (305 mm) high and located so that it is visible to traffic enforcement officials.

Note: *See Figures 11A-2A, 11A-2B, and 11A-2C.*

1109A.8.7 Adjacent Parking. *Parking spaces adjacent to accessible parking spaces shall not be considered as loading and unloading access aisles.*

1109A.8.8 Parking Signage. *Each accessible parking space reserved for persons with disabilities shall be identified by a reflectorized sign permanently posted immediately adjacent to and visible from each stall or space, consisting of the "International Symbol of Accessibility" in white on a dark blue background. The sign shall not be smaller than 70 square inches (4516 mm2) in area and, when in a path of travel, shall be posted at a minimum height of 80 inches (2032 mm) from the bottom of the sign to the parking space finished grade. Signs may also be centered on the wall at the interior end of the parking space at a minimum height of 36 inches (914 mm) from the parking space finished grade, ground or sidewalk. Spaces complying with Section 1109A.8.6 shall have an additional sign stating "Van-Accessible" mounted below the symbol of accessibility.*

Note: *When assigned resident parking is provided, signage is not required except for unassigned or visitor parking spaces.*

An additional sign shall also be posted in a conspicuous place at each entrance to off-street parking facilities or immediately adjacent to and visible from each stall or space. The sign shall not be less than 17 inches (432 mm) by 22 inches (559 mm) in size with lettering not less than 1 inch (25.4 mm) in height, and shall clearly and conspicuously state the following:

"Unauthorized vehicles parked in designated accessible spaces not displaying distinguishing placards or license plates issued for persons with disabilities may be towed away at owner's expense. Towed vehicles may be reclaimed at _____ or by telephoning_____."

Blank spaces are to be filled in with appropriate information as a permanent part of the sign.

In addition to the above requirements, the surface of each accessible parking space shall have a surface identification duplicating either of the following schemes:

1. By outlining or painting the stall or space in blue and outlining on the ground in the stall or space in white or suitable contrasting color the "International Symbol of Accessibility"; or,

2. By outlining the "International Symbol of Accessibility" in white on blue background. The "International Symbol of Accessibility" shall be located so that it is visible to a traffic enforcement officer when a vehicle is properly parked in the space and shall be 36 inches high by 36 inches wide (914 mm by 914 mm).

Note: *See Figures 11A-2A, 11A-2B, and 11A-2C.*

SECTION 1110A — EXTERIOR ROUTES OF TRAVEL

1110A.1 Exterior Accessible Route. *When a building or portion of a building is required to be accessible or adaptable, an accessible route shall be provided to all portions of the building, accessible building entrances and between the building and the public way. The accessible route shall be the most practical direct route and to the maximum extent feasible, coincide with the route for the general public and building residents. Exterior accessible routes shall be provided as follows:*

1. Where more than one route of travel is provided, all routes shall be accessible.

2. At least one accessible route within the boundary of the site shall be provided from public transportation stops, accessible parking and accessible passenger loading and unloading zones, and public streets or sidewalks to the accessible building entrance they serve.

3. At least one accessible route shall connect accessible buildings, facilities, elements and spaces that are on the same site. Accessible routes shall be provided between accessible buildings and accessible site facilities when more than one building or facility is located on a site.

4. At least one accessible route shall connect accessible building or facility entrances with all accessible spaces, elements, and covered multifamily dwelling units.

5. An accessible route shall connect at least one accessible entrance of each covered multifamily dwelling unit with exterior spaces and facilities that serve the dwelling unit.

6. Where elevators are provided for vertical access, all elevators shall be accessible. See Section 1124A.

Note: *If the slope of the finished grade between covered multifamily dwellings and a public use or common use facility (including parking) exceeds 1 unit vertical in 12 units horizontal (8.33% slope), or where other physical barriers (natural or artificial) or legal restrictions, all of which are outside the control of the owner, prevent the installation of an accessible route, an acceptable alternative is to provide access by a vehicular route, provided:*

1. There is accessible parking on an accessible route for at least 2% of the covered multifamily dwelling units, and

2. Necessary site provisions such as parking spaces and curb ramps are provided at the public use or common use facility.

1110A.2 Signs. *At every primary public entrance and at every major junction where the accessible route diverges from the circulation path along or leading to an accessible route, entrance or facility, there shall be a sign displaying the "International Symbol of Accessibility". Signs shall indicate the direction to accessible building entrances and facilities and shall comply with the requirements found in Sections 1143A.2 and 1143A.11.*

1110A.3 Flooring. *If carpet or carpet tile is used in a common-use area or public-use area on a ground or floor surface, it shall have firm backing or no backing. The maximum pile height shall be ½ inch (12.7 mm). Exposed edges of carpet shall be fastened to floor surfaces and have trim along the entire length of the exposed edge. Carpet edge trim shall comply with Section 1111A requirements for changes in level.*

1110A.3.1 Recessed Doormats. *Recessed doormats shall be adequately anchored to prevent interference with wheelchair traffic.*

SECTION 1111A CHANGES IN LEVEL ON ACCESSIBLE ROUTES

1111A.1 Changes in Level Not Exceeding One-Half Inch*. Abrupt changes in level along any accessible route shall not exceed ½ inch (12.7 mm). When changes in level do occur, they shall be beveled with a slope no greater than 1 unit vertical in 2 units horizontal (50% slope). Changes in level not exceeding ¼ inch (6.35 mm) may be vertical.*

1111A.2 Changes Greater Than One-Half Inch. *Changes in level greater than 1/2 inch (12.7 mm) shall be made by means of a sloped surface not greater than 1 unit vertical in 20 units horizontal (5% slope), or a curb ramp, ramp, elevator or special access lift. Stairs shall not be part of an accessible route. When stairs are located along or adjacent to an accessible route they shall comply with Section 1115A for Exterior Stairways.*

SECTION 1112A CURB RAMPS ON ACCESSIBLE ROUTES

1112A.1 General. *Curb ramps within the boundary of the site shall be constructed at each corner of street intersections and where a pedestrian way crosses a curb. The preferred and recommended location for curb ramps is in the center of the crosswalk of each street corner. Where it is necessary to locate a curb ramp in the center of the curb return, the street surfaces shall be marked to identify pedestrian crosswalks, and the lower end of the curb ramp shall terminate within such crosswalk areas. Curb ramps do not require handrails.*

1112A.2. Obstructions. *Curb ramps shall be located or protected to prevent obstruction by parked cars. Built-up curb ramps shall be located so that they do not project into vehicular traffic lanes, parking spaces, or the adjacent loading and unloading access aisle.*

1112A.3 Width of Curb Ramps. *Curb ramps shall be a minimum of 48 inches (1219 mm) in width.*

1112A.4 Diagonal Curb Ramps*. If diagonal (or corner-type) curb ramps have returned curbs or other well-defined edges, such edges shall be parallel to the direction of pedestrian flow. The bottom of diagonal curb ramps shall have a 48 inch (1219 mm) minimum clear space as shown in Figures 11A-3A through 11A-3L. If diagonal curb ramps are provided at marked crossings, the 48 inch (1219 mm) clear space shall be within the markings (see Figures 11A-3A through 11A-3L). If diagonal curb ramps have flared sides, they shall also have at least a 24-inch-long (610 mm) segment of straight curb located on each side of the curb ramp and within the marked crossing. See Figures 11A-3A through 11A-3.*

1112A.5 Slope of Curb Ramps. *The slope of curb ramps shall not exceed 1 unit vertical to 12 units horizontal (8.33% slope) and shall lie, generally, in a single sloped plane. Transitions from ramps to walks, gutters, or streets shall be flush and free of abrupt changes. Maximum slopes of adjoining gutters, road surface immediately adjacent to the curb ramp, or accessible route shall not exceed 1 unit vertical to 20 units horizontal (5% slope) within 4 feet (1219 mm) of the top and bottom of the curb ramp.*

If a curb ramp is located where pedestrians must walk across the ramp, then it shall have flared sides; the maximum slope of the flare shall be 1 unit vertical in 10 units horizontal (10% slope). Curb ramps with returned curbs may be used where pedestrians would not normally walk across the ramp. See Figures 11A-3A through 11A-3L.

1112A.6 Level Landing*. A level landing 48 inches (1219 mm) deep shall be provided at the upper end of each curb ramp over its full width to permit safe egress from the ramp surface, or the slope of the fanned or flared sides of the curb ramp, shall not exceed 1 unit vertical to 12 units horizontal (8.33% slope).*

1112A.7 Finish. *The surface of each curb ramp and its flared sides shall be stable, firm and slip-resistant and shall be of contrasting finish from that of the adjacent sidewalk.*

1112A.8 Border. *All curb ramps shall have a grooved border 12 inches (305 mm) wide at the level surface of the sidewalk along the top and each side approximately 3/4 inch (19 mm) on center. All curb ramps constructed between the face of the curb and the street shall have a grooved border at the level surface of the sidewalk. See Figures 11A-3A through 11A-3K.*

1112A.9 Detectable Warnings. *See Chapter 11B, Section 1127B.5 #7.* ***~~(RESERVED)~~*** *~~A curb ramp shall have a detectable warning that extends the full width and depth of the curb ramp inside the grooved border~~*

~~*when the ramp slope is less than 1 unit vertical to 15 units horizontal (6.7% slope). Detectable warnings shall consist of raised truncated domes with a diameter of nominal 0.9 inch (22.9 mm) at the base tapering to 0.45 inch (11.4 mm) at the top, a height of nominal 0.2 inch (5.08 mm) and a center-to-center spacing of nominal 2.35 inches (59.7 mm) in compliance with Figure 11B-23A. "Nominal" here shall be in accordance with Section 12-11A and B-102, State Referenced Standards Code. The detectable warning shall contrast visually with adjoining surfaces, either light-on-dark or dark-on-light. The material used to provide contrast shall be an integral part of the walking surface. The domes may be constructed in a variety of methods, including cast in place or stamped, or may be part of a prefabricated surface treatment.*~~

~~*Contrast = [(B1-B2/B1-1X 100%) where B1 = light reflectance value (LRV) of the lighter area and B2 = light reflectance value (LRV) of the darker area]. The material used to provide contrast shall be an integral part of the walking surface. The domes may be constructed in a variety of methods, including cast in place or stamped, or they may be part of a prefabricated surface treatment.*~~

~~*Only approved DSA/AC detectable warning products and directional surfaces shall be installed as provided in the CCR, Title 24, Part 1 Articles 2, 3, and 4. Refer to CCR, Title 24, Part 12, Chapter 12-11A and B for building and facilities access specifications, for product approval for detectable warning products, and directional surfaces.*~~

~~***NOTE:*** *Detectable warning products and directional surfaces installed after January 1, 2001, shall be evaluated by an independent entity, selected by the Department of General Services, Division of the State Architect-Access Compliance, for all occupancies, including transportation and other outdoor environments, except that when products and surfaces are for use in residential housing, evaluation shall be in consultation with the Department of Housing and Community Development. See Government Code Section 4460.*~~

SECTION 1113A WALKS AND SIDEWALKS ON AN ACCESSIBLE ROUTE

1113A.1 Width and Continuous Surface. *Walks and sidewalks subject to this chapter shall have a continuous common surface, not interrupted by steps or by abrupt changes in level exceeding 1/2 inch (12.7 mm). See Section 1111A.3.*

1113A.1.1 Width. *Walks and sidewalks shall be a minimum of 48 inches (1219 mm) in width, except that walks serving an individual dwelling unit in covered multifamily buildings may be reduced to 36 inches (914 mm) in clear width except at doors.*

1113A.1.2 Surfaces. *Surfaces shall be slip-resistant as follows:*

1. *Surfaces with a slope of less than 6 percent gradient shall be at least as slip-resistant as that described as a medium salted finish.*

2. *Surfaces with a slope of 6 percent or greater gradient shall be slip-resistant.*

1113A.1.3 Surface Cross Slopes. *Surface cross slopes shall not exceed 1/4 inch (6.35 mm) per foot (2.083% slope) except when the enforcing agency finds that due to local conditions it creates an unreasonable hardship, the cross slope may be increased to a maximum of 1/2 inch (12.7 mm) per foot (4.2% slope) for distances not to exceed 20 feet (6096 mm).*

1113A.2 Walks with Continuous Gradients. *All walks on an accessible route with continuous gradients shall have level areas at least 60 inches (1524 mm) in length at intervals of at least every 400 feet (122 m).*

1113A.3 Five Percent Gradient. *When the slope in the direction of travel of any walk on an accessible route exceeds 1 unit vertical in 20 units horizontal (5% slope), it shall comply with the ramp provisions of Section 1114A.*

1113A.4 Level Areas. *Walks on an accessible route shall be provided with a level area not less than 60 inches by 60 inches (1524 mm by 1524 mm) at a door or gate that swings toward the walk, and not less than 48 inches wide by 44 inches (1219 mm by 1118 mm) deep at a door or gate that swings away from the walk. See Section 1126A.3.2 for strike edge maneuvering space at doors or gate.*

1113A.5 Smooth Surface. *The bottom 10 inches (254 mm) of all doors and or gates except automatic and sliding doors or gates shall have a smooth, uninterrupted surface to allow the door or gate to be opened by a*

wheelchair footrest without creating a trap or hazardous condition. Where narrow frame doors are used, a 10 inch (254 mm) high smooth panel shall be installed on the push side of the door, which will allow the door to be opened by a wheelchair footrest without creating a trap or hazardous condition.

1113A.6 Gratings. *Walks, sidewalks and pedestrian ways on an accessible route shall be free of gratings whenever possible. Gratings located in the surface of any of these areas, grid openings in gratings shall be limited to 1/2 inch (12.7 mm) in the direction of traffic flow.*

Exceptions:

1. Where the enforcement agency determines that compliance with this section would create an unreasonable hardship, an exception may be granted when equivalent facilitation is provided.

2. This section shall not apply in those conditions where, due to legal or physical constraints, all or portions of the site of the project will not allow compliance with these building standards or equivalent facilitation on all or portions of one site without creating an unreasonable hardship.

SECTION 1114A EXTERIOR RAMPS AND LANDINGS ON ACCESSIBLE ROUTES

1114A.1 Width. *The width of ramps shall be consistent with the requirements for exits in Chapter 10 of this code, but in no case shall the ramp width be less than the following:*

1. Ramps serving accessible entrances to covered multifamily buildings where the ramp is the only exit discharge path and serves an occupant load of 300 or more shall have a minimum clear width of 60 inches (1524 mm).

2. Ramps serving accessible entrances in Group R Occupancies with an occupant load of 10 or less may be 36 inches (914 mm) in clear width.

3. All other ramps shall have a minimum clear width of 48 inches (1219 mm).

4. Handrails, curbs, wheel guides and or appurtenances shall not project into the required clear width of a ramp.

Note: *See Section 1114A.6.2.4 for Handrail Projections.*

1114A.2 Slope. *The maximum slope of ramps on an accessible route shall be no greater than 1 unit vertical in 12 units horizontal (8.33% slope). Transitions from ramps to walks, gutters or streets shall be flush and free of abrupt changes.*

1114A.2.1 Cross Slope*. The cross slope of ramp surfaces shall be no greater than 1/4 inch (6.35 mm) per foot (2.083 % slope).*

1114A.3 Outdoor Ramps. *Outdoor ramps, ramp landings and their approaches shall be designed so that water will not accumulate on the walking surface.*

1114A.4 Landings. *Ramp landings shall be level and comply with this section.*

1114A.4.1 Location of Landings. *Landings shall be provided at the top and bottom of each ramp. Intermediate landings shall be provided at intervals not exceeding 30 inches (762 mm) of vertical rise and at each change of direction. Landings are not considered in determining the maximum horizontal distance of each ramp.*

Note: *Examples of ramp dimensions are:*

SLOPE (GRADING %)	***MAXIMUM RISE (Inches)***	***MAXIMUM HORIZONTAL (FEET)***
	(x 25.4 for mm)	***(x 304.8) for mm)***
1:12 (8.33%)	*30*	*30*
1:15 (6.67%)	*30*	*37.5*
1:16 (6.25%)	*30*	*40*
1:20 (5.00%)	*30*	*50*

1114A.4.2 Size of Top Landings*. Top landings shall not be less than 60 inches (1524 mm) wide. Top landings shall have a minimum length of not less than 60 inches (1524 mm) in the direction of the ramp run See Section 1126A.3 for maneuvering clearances at doors.*

1114A.4.3 Landing Width. *The minimum width of bottom and intermediate landings shall not be less than the width of the ramp.*

1114A.4.4 Encroachment of Doors. *Doors in any position shall not reduce the minimum dimension of the landing to less than 42 inches (1067 mm) and shall not reduce the required width by more than 3 inches (76.2 mm) when fully open. (See Figure 11A-6D).*

1114A.4.5 Strike Edge Extension. *The width of the landing shall comply with Section 1126A.3 for strike edge extension and maneuvering space at doors.*

1114A.4.6 Change of Direction. *Intermediate and bottom landings at a change of direction in excess of 30 degrees shall have a length in the direction of ramp run of not less than 72 inches (1829 mm). (See Figures 11A-6C and 11A-6D).*

1114A.4.7 Other Intermediate Landings. *Other intermediate landings shall have a dimension in the direction of ramp run of not less than 60 inches (1524 mm). (See Figure 11A-6C).*

1114A.5 Ramp Height. *Ramps more than 30 inches (762 mm) above the adjacent floor or ground and open on one or both sides shall be provided with guardrails as required by Section 509. Guardrails shall be continuous from the top of the ramp to the bottom of the ramp.*

1114A.6 Ramp Handrails

1114A.6.1 Where Required. *Handrails shall be provided at each side of ramps when the slope exceeds 1 unit vertical in 20 units horizontal (5% slope). Handrails on all ramps shall be continuous.*

Exceptions:

1. Curb ramps.

2. Ramps that serve an individual dwelling unit may have one handrail, except that ramps open on one or both sides shall have handrails provided on the open side or sides.

1114A.6.2 Handrail Configuration.

1114A.6.2.1 Handrail Heights*. The top of handrails shall be 34 to 38 inches (864 to 965 mm) above the ramp surface.*

1114A.6.2.2 Handrail Ends. *Handrail ends shall be returned.*

1114A.6.2.3 Handrail Extension. *Handrails shall extend a minimum of 12 inches (305 mm) beyond the top and bottom of the ramp. Where the extension creates a hazard, the termination of the extension shall be rounded or returned smoothly to floor, wall or post. (See Figure 11A-5A)*

1114A.6.2.4 Handrail Projections. *Handrails projecting from a wall shall have a space of 1½ inches (38.1 mm) between the wall and the handrail. Handrails shall not reduce the required minimum clear width of ramps.*

Handrails may be located in a recess if the recess is a maximum of 3 inches (76.2 mm) deep and extends at least 18 inches (457 mm) above the top of the rail. Any wall or other surface adjacent to the handrail shall be free of sharp or abrasive elements. (See Figure11A-6B).

1114A.6.2.5 Handrail Grips. *The handgrip portion of handrails shall not be less than 1¼ inches (31.75 mm) nor more than 2 inches (50.8 mm) in cross-Sectional dimension or the shape shall provide an equivalent gripping surface. The handgrip portion of handrails shall have a smooth surface with no sharp corners. Edges shall have a minimum radius of 1/8 inch (3.17 mm). Handrails shall not rotate within their fittings. (See Figure 11A-6B).*

Note: *For public use areas, public accommodations, and housing which is publicly funded see Chapter 11B, Division III, Section 1133B.5.5 for provisions of the Division of the State Architect, Access Compliance (DSA/AC).*

1114A.7 Curbs and Wheel Guides. *Ramps exceeding 10 feet (3048 mm) in length and ramp landings having a vertical drop exceeding 4 inches (101.6 mm), shall be provided with one of the following:*

1. Guide curbs a minimum of 2 inches (50.8 mm) in height at each side; or

2. Wheel guide rails at each side, centered 2 to 4 inches (50.8 to 101.6 mm) above the surface of the ramp or ramp landing.

Exception: *Ramps or ramp landings bounded by a wall or fence.*

Note: *See Figure 11A-5A*

SECTION 1115A EXTERIOR STAIRWAYS ALONG ACCESSIBLE ROUTES

1115A.1 General. *Exterior stairways serving floors or dwelling units required to be accessible shall comply with this section.*

Note: *This section shall not apply to exterior stairways serving floors or dwelling units not required to be accessible.*

1115A.2 Open Risers. *Open risers shall not be permitted along accessible routes.*

1115A.3 Treads. *All tread surfaces shall be slip-resistant. Treads shall have smooth, rounded or chamfered exposed edges, and no abrupt edges at the nosing (lower front edge).*

1115A.4 Nosing. *Nosing shall not project more than 1½ inches (38.1 mm) past the face of the riser below. Risers shall be sloped or the underside of the nosing shall have an angle not less than 60 degrees from the horizontal. (See Figure11A-6A).*

1115A.5 Striping for the Visually Impaired. *Where stairways occur outside a building along accessible routes, the upper approach and all treads shall be marked by a strip of clearly contrasting color at least a minimum of 2 inches (50.8 mm) wide to a maximum of 4 inches (101.6 mm) wide and placed parallel to and not more than 1 inch (25.4 mm) from the nose of the step or landing to alert the visually impaired. The strip shall be of a material that is at least as slip resistant as the treads of the stair. A painted strip shall be acceptable.*

1115A.6 Exterior Stairway Handrails

1115A.6.1 Where Required. *Stairways shall have handrails on each side, and every stairway required to be more than 88 inches (2235 mm) in width shall be provided with not less than one intermediate handrail for each 88 inches (2235 mm) of required width. Intermediate handrails shall be located equidistant from the sides of the stairway.*

Exception: *Stairways serving an individual dwelling unit may have one handrail, except that stairways open on one or both sides shall have handrails on the open side or sides.*

1115A.6.2 Handrail Configuration.

1115A.6.2.1 Handrail Heights. *The top of handrails shall be 34 to 38 inches (864 to 965 mm) above the nosing of the treads.*

1115A.6.2.2 Handrail Ends. *Ends shall be returned or shall terminate in newel posts or safety terminals.*

1115A.6.2.3 Handrail Extension. *Handrails shall extend a minimum of 12 inches (305 mm) beyond the top nosing and 12 inches (305 mm), plus the tread width, beyond the bottom nosing. Where the extension creates a hazard, the termination of the extension shall be rounded or returned smoothly to floor, wall or post. Where the stairs are continuous from landing to landing, the inner rail shall be continuous and need not extend out into the landing. (See Figures 11A-6A and 11A-6E).*

1115A.6.2.4 Handrail Projections. *Handrails projecting from a wall shall have a space of 1½ inches (38.1 mm) between the wall and the handrail.*

Handrails may be located in a recess if the recess is a maximum of 3 inches (76.2 mm) deep and extends at least 18 inches (457 mm) above the top of the rail. Any wall or other surface adjacent to the handrail shall be free of sharp or abrasive elements. (See Figure 11A-6B).

1115A.6.2.5 Handrail Grips. *The handgrip portion of handrails shall not be less than 1¼ inches (31.75 mm) nor more than 2 inches (50.8 mm) in cross-Sectional dimension or the shape shall provide an equivalent gripping surface. The handgrip portion of handrails shall have a smooth surface with no sharp corners. Edges shall have a minimum radius of 1/8 inch (3.17 mm). Handrails shall not rotate within their fittings. (See Figure 11A-6B).*

Note: *For public use areas, public accommodations, and housing which is publicly funded see Chapter 11B, Division III, Section 1133B.4.2.6 for provisions of the Division of the State Architect, Access Compliance (DSA/AC).*

SECTION 1116A HAZARDS ON ACCESSIBLE ROUTES

1116A.1 Warning Curbs*. Abrupt changes in level exceeding 4 inches (101.6 mm) in vertical dimension, such as changes in level at planters or fountains located in or adjacent to walks, sidewalks, or other pedestrian ways, shall be identified by curbs other approved barriers projecting at least 6 inches (152.4 mm) in height above the walk or sidewalk surface to warn the blind of a potential drop-off.*

Exceptions:

1. *Between a walk or sidewalk and an adjacent street or driveway.*

2. *When a guardrail or handrail is provided with a wheel guide centered 2 to 4 inches (50.8 to 101.6 mm) above the surface of the walk or sidewalk.*

1116A.2 Headroom Clearance. *Walks, pedestrian ways, and other circulation spaces which are part of the required egress system shall have a minimum clear headroom of 84 inches (2134 mm). Other walks, pedestrian ways, and circulation spaces shall have a minimum clear headroom of 80 inches (2032 mm). If the vertical clearance of an area adjoining an accessible route is reduced to less than 80 inches (2032 mm) nominal dimension, a guardrail or other barrier having its leading edge at or below 27 inches (686 mm) above the finished floor shall be provided. (See Figure 11A-1B).*

Exception: *Doorways and archways less than 24 inches (610mm) in depth may have a minimum clear headroom of 80 inches (2032 mm) nominal. See Section 1126A.*

1116A.3 Overhanging Obstructions*. Any obstruction that overhangs a pedestrian way shall be a minimum of 80 inches (2032 mm) above the walking surface as measured from the bottom of the obstruction. Where a guy support is used parallel to a path of travel, including, but not limited to, sidewalks, a guy brace, sidewalk*

guy or similar device shall be used to prevent an overhanging obstruction (see Section 1116A.2 for required headroom clearance).

1116A.4 Free-Standing Signs. *Wherever signs mounted on posts or pylons protrude from the post or pylons and the bottom edge of the sign is 80 inches (2032 mm) above the finished floor or ground level, the edges of such signs shall be rounded or eased and the corners shall have a minimum radius of .125 inches (see Section 1116A.2 for required headroom clearance).*

Division III — BUILDING FEATURES

Division III Table of Contents

Section 1117A General Requirements for Accessible Entrances, Exits, Interior Routes of Travel, and Facility Accessibility
Section 1118A Egress and Areas for Evacuation Assistance
Section 1119A Interior Routes of Travel
Section 1120A Interior Accessible Routes
Section 1121A Changes in Level on Accessible Routes
Section 1122A Interior Ramps and Landings on Accessible Routes
Section 1123A Interior Stairways along Accessible Routes
Section 1124A Elevators and Special Access (Wheelchair) Lifts
Section 1125A Hazards on Accessible Routes
Section 1126A Doors
Section 1127A Common Use Facilities

SECTION 1117A — GENERAL REQUIREMENTS FOR ACCESSIBLE ENTRANCES, EXITS, INTERIOR ROUTES OF TRAVEL, AND FACILITY ACCESSIBILITY

Notes *~~1.~~ In addition to provisions of this Division, interior routes of travel that provide access to, or egress from, buildings for persons with disabilities shall also comply with Chapter 10.*

1117A.1 General. *When buildings are required to be accessible, building facilities shall be accessible as provided in this division. Where specific floors of a building are required to be accessible, the requirements of this division shall apply only to the facilities located on accessible floors.*

1117A.2 Primary Entrances and Exterior Exit Doors. *All primary entrances and exterior ground-floor exit doors to buildings and facilities on accessible routes shall be accessible to persons with disabilities.*

1117A.3 Separate Dwelling Unit Entrances. *When a ground-floor dwelling unit of a building has a separate entrance, each such ground-floor dwelling unit shall be served by an accessible route, except where the terrain or unusual characteristics of the site prohibit an accessible route. See Section 1150A for site impracticality tests.*

1117A.4 Multiple Entrances. *Only one entrance to covered multifamily buildings is required to be accessible to any one ground floor of a building, except in cases where an individual dwelling unit has a separate exterior entrance. Where the building contains clusters of dwelling units with each cluster sharing a different exterior entrance, more than one entrance may be required to be accessible, as determined by analysis of the site. In every case, the accessible entrance shall be on an accessible route to the covered dwelling units it serves.*

SECTION 1118A EGRESS AND AREAS ~~FOR EVACUATION ASSISTANCE~~ OF REFUGE

1118A.1 General. *Including but not limited to the requirements contained in this chapter for accessible routes, signage, and emergency warning systems ~~In~~ in buildings or portions of buildings required to be accessible, ~~accessible means of egress~~ shall be provided ~~in the same number~~ with accessible means of egress as required ~~for exits~~ by Chapter 10. ~~When an exit required by Chapter 10 is not accessible, an area for evacuation assistance shall be provided. Areas for evacuation assistance shall comply with the requirements of this Code and shall adjoin an accessible route of travel complying with this Code.~~ See Section 1007.*

~~***EXCEPTIONS:***~~

~~*1. Areas of evacuation assistance are not required in buildings or facilities having a supervised automatic sprinkler system.*~~

~~*2. Areas of evacuation assistance are not required in alterations of existing buildings except when the alteration or addition is subject to the provisions of this Chapter as specified in Section 1102A.2.*~~

~~***1118A.2 Areas for Evacuation Assistance.***~~

~~***1118A.2.1 Location and Construction.*** *An area for evacuation assistance shall be one of the following:*~~

~~*1. A portion of a stairway landing within a smoke proof enclosure, complying with Section 1005.3.3.*~~

~~*2. A portion of an exterior exit balcony located immediately adjacent to an exit stairway when the exterior exit balcony complies with Section 1006.3. Openings to the exterior of the building located within 20 feet (6096 mm) of the area for evacuation assistance shall be protected with fire assemblies having a three-fourths-hour fire-protection rating.*~~

~~*3. A portion of a one-hour fire-resistive corridor complying with Section 1004.3.4 located immediately adjacent to an exit enclosure.*~~

~~*4. A vestibule located immediately adjacent to an exit enclosure and constructed to the same fire resistive standards as required by Section 1004.3.4.*~~

~~*5. A portion of a stairway landing within an exit enclosure which is vented to the exterior and is separated from the interior of the building by not less than one-hour fire-resistive door assemblies.*~~

~~*6. When approved by the building official, an area or room, which is separated from other portions of the building by a smoke barrier. Smoke barriers shall have a fire-resistive rating of not less than one-hour and shall completely enclose the area or room. Doors in the smoke barrier shall be tight fitting smoke- and draft-control assemblies having a fire-protection rating of not less than 20 minutes and shall be self-closing or automatic closing. The area or room shall be provided with an exit directly to an exit enclosure. When the room or area exits into an exit enclosure which is required to be of more than one-hour fire-resistive construction, the room or area shall have the same fire-resistive construction, including the same opening protection, as required for the adjacent exit enclosure.*~~

~~*7. An elevator lobby complying with Section 1118A.3.*~~

~~***1118A.2.2 Size.*** *Each area for evacuation assistance shall provide at least two accessible areas that are not less than 30 inches by 48 inches (762 mm by 1219 mm). The area for evacuation assistance shall not encroach on any required exit width. The total number of such 30-inch by 48-inch (762 mm by 1219 mm) areas per story shall not be less than one for every 200 persons of calculated occupant load served by the area for evacuation assistance.*~~

~~***EXCEPTION:*** *The building official may reduce the minimum number of 30-inch by 48-inch (762 mm by 1219 mm) areas to one for each area for evacuation assistance on floors where the occupant load is less than 200.*~~

~~***1118A.2.3 Adjacent Stairway Width.*** *Each stairway adjacent to an area for evacuation assistance shall have a minimum clear width of 48 inches (1219 mm) between handrails.*~~

~~***1118A.2.4 Two-Way Communication.***~~

~~***1118A.2.4.1 Communication and Location.*** *A telephone with controlled access to a public telephone system or another method of two-way communication shall be provided between each area of refuge and the primary entry. The fire department may approve a location other than the primary entry*~~

~~***1118A.2.4.2 Visible and Audible Communication method.*** *A method of two-way communication with both visible and audible communication shall be provided between each area of evacuation assistance and the primary entry. A button in the area of rescue assistance shall activate both a light in the area of rescue*~~

~~*assistance indicating that rescue has been requested and a light at the primary entry indicating that rescue is being requested. A button at the primary entry shall activate both a light at the primary entry and a light in the area of rescue assistance indicating that the request has been received.*~~

~~***1118A.2.5 Identification.*** *Each area for evacuation assistance shall be identified by a sign with the "International Symbol of Accessibility" and text that clearly reads, "AREA FOR EVACUATION ASSISTANCE." The sign shall be illuminated when exit sign illumination is required. In each area for evacuation assistance, instructions on the use of the area under emergency conditions shall be posted adjoining the two-way communication system.*~~

~~***1118A.3 Area for Evacuation Assistance, High Rise Alternative.*** *Within a building of any height or occupancy constructed in accordance with the requirements of Sections 403.1 through 403.10, an area for evacuation assistance may be located in the elevator lobby when:*~~

~~*1. The area for evacuation assistance complies with the requirements for size, two-way communication and identification as specified in Section 1118A.2; and*~~

~~*2. Elevator shafts and adjacent lobbies are pressurized as required for smoke-proof enclosures in Section 1005.3.3. Such pressurization system shall be activated by smoke detectors on each floor located in a manner approved by the building official. Pressurization equipment and its ductwork within the building shall be separated from other portions of the building by a minimum two-hour fire-resistive construction.*~~

~~***1118A.4 Emergency Warning Systems/ Accessibility Requirements.*** *Emergency warning systems as part of the fire-alarm system shall be designed and installed in accordance with NFPA 72 as amended in Chapter 35.*~~

~~***1118A.5 Emergency Egress****. Accessible routes serving any accessible space or element shall also serve as a means of egress for emergencies or connect to an accessible place of refuge. Such accessible routes and places of refuge shall comply with the requirements established by the enforcement agency.*~~

SECTION 1119A INTERIOR ROUTES OF TRAVEL

1119A.1 General. *When a building or portion of a building is required to be accessible or adaptable, an accessible route shall be provided to all portions of the building, accessible building entrances, and to covered multifamily dwelling units. The accessible route shall, to the maximum extent feasible, coincide with the route for the general public and other building residents. Accessible routes shall not pass through kitchens, storage rooms, restrooms, closets or other spaces used for similar purposes except within an individual dwelling unit. Accessible routes shall be provided as follows:*

1. Where more than one route of travel is provided, all routes shall be accessible.

2. At least one accessible route shall connect accessible building or facility entrances with all accessible spaces, elements, and covered multifamily dwelling units.

3. An accessible route shall connect at least one accessible primary entrance of each covered multifamily dwelling unit with interior and exterior spaces and facilities that serve the unit.

4. Where elevators are provided for vertical access, all elevators shall be accessible.

1119A.2 Flooring. *If carpet or carpet tile is used in a common-use area or public-use area on a ground or floor surface, it shall have firm backing or no backing. The maximum pile height shall be ½ inch (12.7 mm). Exposed edges of carpet shall be fastened to floor surfaces and have trim along the entire length of the exposed edge. Carpet edge trim shall comply with Section 1111A requirements for changes in level.*

1119A.2.1 Recessed Doormats. *Recessed doormats shall be adequately anchored to prevent interference with wheelchair traffic.*

SECTION 1120A INTERIOR ACCESSIBLE ROUTES

Note: *For the purpose of this section, interior accessible routes shall include but not be limited to corridors, hallways, exit balconies, and covered or enclosed walkways.*

1120A.1 Widths. *Interior accessible routes serving an occupant load of 10 or more shall not be less than 44 inches (1118 mm) in width. Interior accessible routes serving an occupant load of less than 10 shall not be less than 36 inches (914 mm) in width.*

If a person in a wheelchair must make a turn around a corner or an obstruction, the minimum clear width of the accessible route shall be as shown in Figure 11A-1C.

1120A.2 Interior Accessible Routes Over 200 Feet (60960 mm). *Interior accessible routes that exceed 200 feet (60960 mm) in length shall:*

1. *Have minimum clear width of 60 inches (1524 mm); or*

2. *Have at a central location, a 60-inch by 60-inch (1524 mm by 1524 mm) minimum wheelchair turning space or passing alcove; or*

3. *Have at a central location, an intervening cross or tee that is a minimum of 44 inches (1118 mm) in width; or*

Note: *See Figure 11A-1L*

1120A.3 Changes in Elevation. *Interior accessible routes which have changes in elevation shall be transitioned and comply with Sections 1121A or 1122A.*

Exception: *Doors and thresholds as provided in Section 1126A.*

SECTION 1121A CHANGES IN LEVEL ON ACCESSIBLE ROUTES

1121A.1 Changes in Level Not Exceeding One-Half Inch*. Abrupt changes in level along any accessible route shall not exceed ½ inch (12.7 mm). When changes in level do occur, they shall be beveled with a slope no greater than 1 unit vertical in 2 units horizontal (50% slope). Changes in level not exceeding ¼ inch (6.35 mm) may be vertical.*

1121A.2 Changes Greater Than One-Half Inch. *Changes in level greater than 1/2 inch (12.7 mm) shall be made by means of a sloped surface not greater than 1 unit vertical in 20 units horizontal (5% slope), or a curb ramp, ramp, elevator or special access lift. When stairs are located along or adjacent to an accessible route they shall comply with Section 1123A for Interior Stairways.*

SECTION 1122A INTERIOR RAMPS AND LANDINGS ON ACCESSIBLE ROUTES

1122A.1 Width. *The width of ramps shall be consistent with the requirements for exits in Chapter 10 of this Code, but in no case shall the ramp width be less than the following:*

1. *Ramps serving accessible entrances to covered multifamily buildings where the ramp is the only exit discharge path and serves an occupant load of 300 or more shall have a minimum clear width of 60 inches (1524 mm).*

2. *Ramps serving accessible entrances in Group R Occupancies with an occupant load of 10 or less may be 36 inches (914 mm) in clear width.*

3. *All other ramps shall have a minimum clear width of 48 inches (1219 mm).*

4. *Handrails, curbs, wheel guides and or appurtenances shall not project into the required clear width of a ramp.*

Note: *See Section 1122A.5.2.4 for Handrail Projections.*

1122A.2 Slope. *The maximum slope of ramps on an accessible route, shall be no greater than 1 unit vertical in 12 units horizontal (8.33% slope).*

1122A.2.1 Cross Slope. *The cross slope of ramp surfaces shall not exceed 1/4 inch (6.35 mm) per foot (2.083% slope).*

1122A.3 Landings. *Ramp landings shall be level and comply with this section.*

1122A.3.1 Location of Landings. *Landings shall be provided at the top and bottom of each ramp. Intermediate landings shall be provided at intervals not exceeding 30 inches (762 mm) of vertical rise and at each change of direction. Landings are not considered in determining the maximum horizontal distance of each ramp.*

Note: *Examples of ramp dimensions are:*

SLOPE (GRADING %)	***MAXIMUM RISE (Inches)***	***MAXIMUM HORIZONTAL (FEET)***
	(x 25.4 for mm)	***(x 304.8) for mm)***
1:12 (8.33%)	*30*	*30*
1:15 (6.67%)	*30*	*37.5*
1:16 (6.25%)	*30*	*40*
1:20 (5.00%)	*30*	*50*

1122A.3.2 Size of Top Landings*. Top landings shall not be less than 60 inches (1524 mm) wide. Top landings shall have a minimum length of not less than 60 inches (1524 mm) in the direction of the ramp run. See Section 1126A.3 for maneuvering clearances at doors. (See Figure 11A-6C).*

1122A.3.3 Landing Width. *The minimum width of bottom and intermediate landings shall not be less than the width of the ramp.*

1122A.3.4 Encroachment of Doors. *Doors in any position shall not reduce the minimum dimension of the landing to less than 42 inches (1067 mm) and shall not reduce the required width by more than 3 inches (76.2 mm) when fully open. (See Figure 11A-6d).*

1122A.3.5 Strike Edge Extension. *The width of the landing shall comply with Section 1126A.3 for maneuvering clearances at doors.*

1122A.3.6 Change of Direction. *Intermediate and bottom landings at a change of direction in excess of 30 degrees shall have a length in the direction of ramp run of not less than 72 inches (1829 mm). (See Figures 11A-6C and 11A6D).*

1122A.3.7 Other Intermediate Landings. *Other intermediate landings shall have a dimension in the direction of ramp run of not less than 60 inches (1524 mm). (See Figure 11A-6C).*

1122A.4 Ramp Height. *Ramps more than 30 inches (762 mm) above the adjacent floor or ground and open on one or both sides shall be provided with guardrails as required by Section 509. Guardrails shall be continuous from the top of the ramp to the bottom of the ramp.*

1122A.5 Ramp Handrails

1122A.5.1 Where Required. *Handrails shall be provided at each side of ramps when the slope exceeds 1 unit vertical in 20 units horizontal (5% slope). Handrails on all ramps shall be continuous.*

Exceptions:

1. *Curb ramps.*

2. *Ramps that serve an individual dwelling unit may have one handrail, except that ramps open on one or both sides shall have handrails provided on the open side or sides.*

1122A.5.2 Handrail Configuration.

1122A.5.2.1Handrail Heights*. The top of handrails shall be 34 to 38 inches (864 to 965 mm) above the ramp surface.*

1122A.5.2.2 Handrail Ends. *Handrail ends shall be returned.*

1122A.5.2.3 Handrail Extension. *Handrails shall extend a minimum of 12 inches (305 mm) beyond the top and bottom of the ramp. Where the extension creates a hazard, the termination of the extension shall be rounded or returned smoothly to floor, wall or post. (See Figure 11A-5A).*

1122A.5.2.4 Handrail Projections. *Handrails projecting from a wall shall have a space of 1½ inches (38.1 mm) between the wall and the handrail.*

Handrails may be located in a recess if the recess is a maximum of 3 inches (76.2 mm) deep and extends at least 18 inches (457 mm) above the top of the rail. Any wall or other surface adjacent to the handrail shall be free of sharp or abrasive elements. (See Figure 11A-6B).

1122A.5.2.5 Handrail Grips. *The handgrip portion of handrails shall not be less than 1¼ inches (31.75 mm) nor more than 2 Inches (50.8 mm) in cross-Sectional dimension or the shape shall provide an equivalent gripping surface. The handgrip portion of handrails shall have a smooth surface with no sharp corners. Edges shall have a minimum radius of 1/8 inch (3.17 mm). Handrails shall not rotate within their fittings. (See Figure 11A-6B).*

Note: *For public use areas, public accommodations, and housing which is publicly funded see Chapter 11B, Division III, Section 1133B.5.5 for provisions of the Division of the State Architect, Access Compliance (DSA/AC).*

1122A.6 Curbs and Wheel Guides. *Ramps exceeding 10 feet (3048 mm) in length, and ramp landings having a vertical drop exceeding 4 inches, shall be provided with one of the following:*

1. *Guide curbs a minimum of 2 inches (50.8 mm) in height at each side; or*

2. *Wheel guide rails at each side, centered 2 to 4 inches (50.8 to 101.6 mm) above the surface of the ramp or ramp landing.*

Exception: *Ramps or ramp landings bounded by a wall or fence.*

Note: *See Figure 11A-5A.*

SECTION 1123A INTERIOR STAIRWAYS ALONG ACCESSIBLE ROUTES

1123A.1. General. *Interior stairways serving floors or dwelling units required to be accessible shall comply with this section.*

Note: *This section shall not apply to interior stairways serving floors or dwelling units not required to be accessible.*

1123A.2 Open Risers. *Open risers shall not be permitted along accessible routes.*

1123A.3 Treads. *All tread surfaces shall be slip-resistant. Treads shall have smooth, rounded or chamfered exposed edges, and no abrupt edges at the nosing (lower front edge).*

1123A.4 Nosing. *Nosing shall not project more than 1½ inches (38.1 mm) past the face of the riser below. Risers shall be sloped or the underside of the nosing shall have an angle not less than 60 degrees from the horizontal. (See Figure 11A-6A)*

1123A.5 Striping for the Visually Impaired. *The upper approach and the lower tread of each stair along routes required to be accessible, shall be marked by a strip of clearly contrasting color at least a minimum of 2 inches (50.8 mm) wide to a maximum of 4 inches (101.6 mm) wide placed parallel to, and not more than 1 inch (25.4 mm) from, the nose of the step or landing to alert the visually impaired. The strip shall be of material that is at least as slip resistant as the other treads of the stair. A painted strip shall be acceptable.*

1123A.6 Interior Stairway Handrails

1123A.6.1 Where Required. *Stairways shall have handrails on each side, and every stairway required to be more than 88 inches (2235 mm) in width shall be provided with not less than one intermediate handrail for each 88 inches (2235 mm) of required width. Intermediate handrails shall be located equidistant from the sides of the stairway.*

> ***Exception:*** *Stairways serving an individual dwelling unit may have one handrail, except that stairways open on one or both sides shall have handrails on the open side or sides.*

1123A.6.2 Handrail Configuration.

1123A.6.2.1 Handrail Heights. *The top of handrails shall be 34 to 38 inches (864 to 965 mm) above the nosing of the treads.*

1123A.6.2.2 Handrail Ends. *Ends shall be returned or shall terminate in newel posts or safety terminals.*

1123A.6.2.3 Handrail Extension. *Handrails shall extend a minimum of 12 inches (305 mm) beyond the top nosing and 12 inches (305 mm), plus the tread width, beyond the bottom nosing. Where the extension creates a hazard, the termination of the extension shall be rounded or returned smoothly to floor, wall or post. Where the stairs are continuous from landing to landing, the inner rail shall be continuous and need not extend out into the landing. (See Figures 11A-6A and 11A-6E).*

1123A.6.2.4 Handrail Projections. *Handrails projecting from a wall shall have a space of 1½ inches (38.1 mm) between the wall and the handrail.*

Handrails may be located in a recess if the recess is a maximum of 3 inches (76.2 mm) deep and extends at least 18 inches (457 mm) above the top of the rail. Any wall or other surface adjacent to the handrail shall be free of sharp or abrasive elements. (See Figure 11A-6B).

1123A.6.2.5 Handrail Grips. *The handgrip portion of handrails shall not be less than 1¼ inches (31.75 mm) nor more than 2 inches (50.8 mm) in cross-sectional dimension or the shape shall provide an equivalent gripping surface. The handgrip portion of handrails shall have a smooth surface with no sharp corners. Edges shall have a minimum radius of 1/8 inch (3.17 mm). Handrails shall not rotate within their fittings. (See Figure 11A-6B).*

Note: *For public use areas, public accommodations, and housing which is publicly funded see Chapter 11B, Division III, Section 1133B.4.2.6 for provisions of the Division of the State Architect, Access Compliance (DSA/AC).*

SECTION 1124A ELEVATORS and SPECIAL ACCESS (WHEELCHAIR) LIFTS

1124A.1 General. *Elevators provided in covered multifamily buildings shall be accessible and comply with this Chapter, and Title 24, Part 7 of the California Code of Regulations.*

> ***Exception:*** *Private elevators serving only one dwelling unit.*

1124A.2 Location. *Passenger elevators shall be located on a major accessible route and provisions shall be made to ensure that they remain accessible and usable at all times that the building is occupied.*

1124A.3 Size of Cab and Control Locations.

1124A.3.1 General. *Elevators serving covered multifamily buildings shall be sized to accommodate a wheelchair in accordance with this section.*

> ***Exception:*** *When the enforcing agency determines that compliance with any requirement of this section would create an unreasonable hardship, an exception to the requirement shall be granted when equivalent facilitation is provided, and where it can be demonstrated that a person using a wheelchair can enter and operate the elevator.*

1124A.3.2 Car Inside. *The car inside shall allow for the turning of a wheelchair. The minimum clear distance between walls or between wall and door, excluding return panels, shall not be less than 80 inches by 54 inches (2032 mm by 1372 mm) for center-opening doors, and 68 inches by 54 inches (1727 mm by 1372*

mm) for side-slide opening doors. (See Figure 11A-7A). Minimum distance from wall to return panel shall not be less than 51 inches (1295 mm).

1124A.3.2.1 Door Size. *Elevator doors shall provide a minimum clear width of 36 inches (914 mm).*

1124A.3.3 Car Controls.

1124A.3.3.1 Car Control Location *Elevator floor buttons shall be within 54 inches (1372 mm) above the finish floor for side approach and 48 inches (1219 mm) for front approach. Except for photoelectric tube bypass switches, emergency controls, including the emergency stop and alarm, shall be grouped in or adjacent to the bottom of the panel and shall be no lower than 35 inches (889 mm) from the floor. For multiple controls only, one set must comply with these height requirements. Floor buttons shall be provided with visual indicators to show when each call is registered. The visual indicators shall be extinguished when each call is answered.*

Note: *Where possible, a 48-inch (1219 mm) maximum height for elevator floor buttons is preferred.*

1124A.3.3.2 Car Control Buttons. *Passenger elevator car controls shall have a minimum dimension of 3/4 inch (19.05 mm) and shall be raised 1/8 inch (3.17 mm) plus or minus 1/32 inch (0.8 mm) above the surrounding surface.*

Control buttons shall be illuminated, shall have square shoulders, and shall be activated by a mechanical motion that is detectable.

All control buttons shall be designated by a 5/8-inch-minimum (15.87 mm), Arabic numeral, standard alphabet character, or standard symbol immediately to the left of the control button. A Braille symbol shall be located immediately below the numeral, character or symbol. A minimum clear space of 3/8 inch (9.5 mm) or other suitable means of separation shall be provided between rows of control buttons.

Note: *See Figure 11A-7B.*

The raised characters and symbols shall be white on a black background. Controls and emergency equipment identified by raised symbols shall include, but not be limited to, door open, door close, alarm bell, emergency stop and telephone. The call button for the main entry floor shall be designated by a raised star at the left of the floor designation.

1124A.3.4 Emergency Telephone. *The emergency telephone handset shall be positioned no higher than 48 inches (1219 mm) above the floor, and the handset cord shall be a minimum of 29 inches (737 mm) in length. If the telephone system is located in a closed compartment, the compartment door hardware shall be lever type conforming to the provisions of Section 1003.3.1.8. Emergency intercommunication shall not require voice communication.*

1124A.4 Hall Call Buttons. *Call operation buttons shall be centered 42 inches (1067 mm) above the floor. Buttons shall be a minimum of 3/4-inch (19.05 mm) in size and shall be raised 1/8-inch (3.17 mm) plus or minus 1/32-inch (0.8 mm) above the surrounding surface. Visual indication shall be provided to show each call registered and extinguished when answered. Objects adjacent to, and below, hall call buttons shall not project more than 4 inches (101.6 mm) from the wall.*

1124A.5 Minimum Illumination. *The minimum illumination at the car controls threshold and the landing when the car and landing doors are open shall not be less than 5 foot-candles (54 lx).*

1124A.6 Hall Lantern. *A visual and audible signal shall be provided at each hoistway entrance indicating to the prospective passenger the car answering the call and its direction of travel as follows:*
The visual signal for each direction shall be a minimum of 2 1/2 inches (63.5 mm) high by 2 1/2 inches (63.5 mm) wide, and visible from the proximity of the hall call button.

The audible signal shall sound once for the up direction and twice for the down direction or of a configuration which distinguishes between up and down elevator travel.

The center line of the fixture shall be located a minimum of 6 feet (1829 mm) in height from the lobby floor.

The use of in-car lanterns, located in or on the car doorjambs, visible from the proximity of the hall call buttons and conforming to the above requirements of this section shall or will be acceptable.

Note: *The use of arrow shapes is preferred for visible signals.*

1124A.7 Door Delay

1124A.7.1 Hall Call*. The minimum acceptable time from notification that a car is answering a call (lantern and audible signal) until the doors of the car start to close shall be calculated by the following equations but shall be no less than 5 seconds:*

T = D / (1.5 ft/s) or T = D / (445 mm/s)

Where T is the total time in seconds and D is the distance from a point in the lobby or landing area 60 inches (1524 mm) directly in front of the farthest call button controlling that car to the centerline of its hoistway door (see Figure 11A-7D). For cars with in-car lanterns, T begins when the lantern is visible from the vicinity of hall call buttons and an audible signal is sounded.

1124A.7.2 Door Delay for Car Calls. *The minimum acceptable time for doors to remain fully open after receiving a call shall not be less than 5 seconds.*

1124A.8 Doorjamb Marking. *All elevator hoistway entrances shall have raised floor number designations provided on both jambs. Characters shall be raised Arabic numerals a minimum of 2 inches (50.8 mm) in height with raised Braille symbols placed below the corresponding raised characters. The raised characters shall be on a contrasting background with the centerline of the characters 60 inches (1524 mm) from the floor. Braille symbols shall conform to Sections 1117B.5.5 and 1117B.5.6. On the grade level, a raised five pointed star shall be placed to the left of the raised character. The outside diameter of the star shall be 2 inches. Braille shall be placed below the corresponding raised characters. (See Figure 11A-7C).*

1124A.9 Door Protective and Reopening Devices*. Doors closed by automatic means shall be provided with a door-reopening device that will function to stop and reopen a car door and adjacent hoistway door in case the car door is obstructed while closing.*

This reopening device shall also be capable of sensing an object or person in the path of a closing door without requiring contact for activation at a nominal 5 inches and 29 inches (127 mm and 737 mm) above the floor.

Door-reopening devices shall remain effective for a period of not less than 20 seconds. After such an interval, the doors may close in accordance with the requirements of ANSI 17.1-86, the American Society of Mechanical Engineers (ASME) document ASME 17.1-1990.

1124A.10 Operation and Leveling*. The elevator shall be automatic and be provided with a self-leveling feature that will automatically bring the car to the floor landings within a tolerance of plus or minus 1/2 inch (12.7 mm) under rated loading to zero loading conditions. This self-leveling shall, within its zone, be entirely automatic and independent of the operating device and shall correct the overtravel or undertravel. The car shall also be maintained approximately level with the landing, irrespective of load.*

The clearance between the car platform sill and the edge of the hoistway landing shall be no greater than 1 1/4 inches (31.75 mm).

1124A.11 Special Access (Wheelchair) Lifts. *Special access wheelchair lifts may be provided between levels, in lieu of passenger elevators, when the vertical distance between landings, as well as the structural design and safeguards are as allowed by the State of California, the Department of Industrial Relations, Division of Occupational Safety and Health, and any applicable safety regulations of other administrative authorities having jurisdiction.*

If lifts are provided, they shall be designed and constructed to facilitate unassisted entry, operation, and exit from the lift, and shall comply with restrictions and enhancements of this section in conjunction with Section 3093 to 3094.5, Part 7 of the California Code of Regulations, Title 24.

SECTION 1125A HAZARDS ON ACCESSIBLE ROUTES

***1125A.1 Warning Curbs**. Abrupt changes in level exceeding 4 inches (101.6 mm) in vertical dimension, such as changes in level at planters or fountains located in or adjacent to walks, halls, corridors, passageways, aisles, pedestrian ways, and other circulation spaces, shall be identified by curbs projecting at least 6 inches (152.4 mm) in height above the walk or sidewalk surface to warn the blind of a potential drop-off.*

> ***Exception:** When a guardrail or handrail is provided with a wheel guide centered 2 to 4 inches (50.8 to 101.6 mm) above the surface of the walk or sidewalk.*

***1125A.2 Headroom Clearance.** Walks, halls, corridors, passageways, aisles, pedestrian ways, and other circulation spaces which are part of the required egress system shall have a minimum clear headroom of 84 inches (2134 mm). Other walks, pedestrian ways, and circulation spaces shall have a minimum clear headroom of 80 inches (2032 mm). If the vertical clearance of an area adjoining an accessible route is reduced to less than 80 inches (2032 mm) nominal dimension, a guardrail or other barrier having its leading edge at or below 27 inches (686 mm) above the finished floor shall be provided. (See Figure 11A-1B).*

> ***Exception:** Doorways and archways less than 24 inches (610mm) in depth may have a minimum clear headroom of 80 inches (2032 mm) nominal. See Section 1126A.*

***1125A.3 Overhanging Obstructions**. Any obstruction that overhangs a pedestrian way shall be a minimum of 80 inches (2032 mm) above the walking surface as measured from the bottom of the obstruction. Where a guy support is used parallel to a path of travel, including, but not limited to, sidewalks, a guy brace, sidewalk guy or similar device shall be used to prevent an overhanging obstruction (see Section 1125A.2 for required headroom clearance).*

***1125A.4 Free-Standing Signs.** Wherever signs mounted on posts or pylons protrude from the posts or pylons and the bottom edge of the sign is less than 80 inches (2032 mm) above the finished floor or ground level, the edges of such signs shall be rounded or eased and the corners shall have a minimum radius of .125 inches (see Section 1125A.2 for required headroom clearance).*

SECTION 1126A DOORS

***1126A.1 Width and Height of Doors.** Doorways which provide access to common use areas or covered multifamily dwellings shall comply with the following:*

> *1. Permit the installation of a door not less than 36 inches (914 mm) in width, not less than 80 inches (2032 mm) in height and provide a clear width of not less than 32 inches (813 mm), measured with the door positioned at an angle of 90 degrees from its closed position.*
>
> *2. Be capable of opening at least 90 degrees.*
>
> *3. A pair of doors, manual or automatic, must have at least one leaf which provides a clear width of not less than 32 inches (813 mm), measured with the door positioned at an angle of 90 degrees from its closed position.*
>
> *4. The width of any component in the egress system shall not be less than the minimum width required by Section 1003.2.3.*

Revolving doors shall not be used as a required entrance for persons with disabilities.

***1126A.2 Level Floor or Landing.** The floor or landing on each side of an exit door shall be level. See Chapter 10.*
***1126A.2.1 Thresholds and Changes in Elevation at Doors.** The floor or landing shall not be more than 1/2 inch (12.7 mm) lower than the top of the threshold of the doorway. (See Figure 11A-8I).*

Changes in level between 1/4 inch (6.35 mm) and 1/2 inch (12.7 mm) shall be beveled with a slope no greater than 1 unit vertical in 2 units horizontal (50% slope). Changes in level greater than 1/2 inch (12.7 mm) shall be accomplished by means of a ramp (see Section 1122A).

1126A.3 Maneuvering Clearances at Doors.

1126A.3.1 General. *The level floor or landing of an exit door shall have a length in the direction of the door swing of at least 60 inches (1524 mm) and a length opposite the direction of the door swing of at least 44 inches (1118 mm) measured at right angles to the plane of the door in its closed position. (See Figures 11A-8D, 11A-8E and 11A-8F for maneuvering spaces at sliding doors).*

1126A.3.2 Strike Edge Maneuvering Space *The width of the level area on the side to which the door swings shall extend at least 24 inches (610 mm) past the strike edge of the door for exterior doors and at least 18 inches (457 mm) past the strike edge for interior doors.*

Note: *Twenty-four inches (610 mm) is preferred for strike-side clearance.*

1126A.3.2.1 Front Approach. *The following provisions shall apply to swinging doors with front approach:*

1. For pull side approach the level floor or landing shall extend in the direction of the door swing at least 60 inches (1524 mm). (See Figure 11A-8A).

2. For push side approach the level floor or landing shall extend opposite the direction of the door swing at least 48 inches (1219 mm). (See Figure 11A-8A).

3. Doors with push side approach having both a closer and a latch shall be provided with a clear and level area extending a minimum of 12 inches (305 mm) past the strike edge on the approach side of the door. (See Figure 11A-8A).

1126A.3.2.2 Hinge Side Approach. *The following provisions shall apply to swinging doors with hinge side approach:*

1. Doors with pull side approach shall be provided with a level floor or landing not less than 60 inches (1524 mm) in depth. A clear and level area shall extend a minimum of 36 inches (914 mm) past the strike edge on the approach side of the door. (See Figure 11A-8B).

Exception: *Doors with pull side approach and a level floor or landing greater than 60 inches (1524 mm) in depth shall be provided with a clear and level area at least 24 inches (610 mm) past the strike edge of the door for exterior doors and at least 18 inches (457 mm) past the strike edge for interior doors*

2. Doors with push side approach shall have a level floor or landing not less than 44 inches (1118 mm) in depth, and shall be provided with a clear and level area extending a minimum of 54 inches (1372 mm) from the strike edge of the door jamb past the hinge side of the door. Doors with a latch and closer shall have a level floor or landing not less than 48 inches (1219 mm) depth at the push side of the door. (See Figure 11A-8B).

1126A.3.2.3 Latch Side Approach. *The following provisions shall apply to swinging doors with latch side approach:*

1. Doors with pull side approach shall have a level floor or landing not less than 60 inches (1524 mm) in depth, and shall be provided with a clear and level area extending a minimum of 24 inches (610 mm) past the strike edge on the approach side of the door. (See Figure 11A-8C).

Exception: *Doors serving individual covered multifamily dwelling units shall have a minimum landing depth of 44 inches (1118 mm) except that doors with a closer shall have a minimum landing depth of 54 inches (1372 mm).*

2. Doors with push side approach shall have a level floor or landing not less than 44 inches (1118 mm) in depth, and shall be provided with a clear and level area extending a minimum of 24 inches (610 mm) past the strike edge on the approach side of the door. Doors with a closer shall have a level floor or landing not less than 48 inches (1219 mm) depth at the push side of the door. (See Figure 11A-8C).

1126A.3.3 Space Between Consecutive Doors. *The minimum space between two hinged or pivoted doors in series, serving other than a required exit stairway, shall provide a minimum of 48 inches (1219 mm) plus the width of the door swinging into the space. Doors in a series shall swing either in the same direction or away from the space between the doors. (See Figure 11A-8G, and 11A-8H).*

Where the door opens into a stair or smoke proof enclosure, the landing need not have a minimum length of 60 inches (1524 mm). (See Figure 11A-8H).

***1126A.4 Closer-Effort to Operate Doors**. Maximum effort to operate doors shall not exceed 8½ pounds (38 N) for exterior doors and 5 pounds (22 N) for interior doors, such pull or push effort being applied at right angles to hinged doors and at the center plane of sliding or folding doors. Compensating devices or automatic door operators may be utilized to meet these standards. When fire doors are required, the maximum effort to operate the door may be increased to the minimum allowable by the appropriate enforcement agency, not to exceed 15 pounds (66.7 N).*

***1126A.4.1 Door Closer.** If the door has a closer, then the sweep period of the closer shall be adjusted so that from an open position of 70 degrees, the door will take at least 3 seconds to move to a point 3 inches (75 mm) from the latch, measured to the landing edge of the door.*

***1126A.5 Type of Lock or Latch.** The type of latch and lock required for all doors shall be in accordance with Chapter 10, Section 1003.3.1.8.*

***1126A.6 Hand-Activated Door Hardware.** Hand-activated door latching, locking, and opening hardware shall be centered between 30 inches (762 mm) and 44 inches (1118 mm) above the floor. Latching and locking doors that are hand-activated and on an accessible route shall be operable with a single effort by lever-type hardware, panic bars, push-pull activating bars, or other hardware designed to provide passage without requiring the ability to grasp the opening hardware. Locked exit doors shall operate consistent with Section 1126A.4, in the direction of egress.*

***1126A.6.1 Lever Type Hardware.** The lever or lever of actuated latches or locks shall be curved with a return to within 1/2 inch of the door to prevent catching on the clothing of persons during egress.*

***Exception:** Group R and U Occupancies with an occupant load of 10 or less.*

***1126A.7 Smooth Surface.** The bottom 10 inches (254 mm) of all doors and or gates shall have a smooth, uninterrupted surface to allow the door or gate to be opened by a wheelchair footrest without creating a trap or hazardous condition. Where narrow frame doors are used, a 10 inch (254 mm) high smooth panel shall be installed on the push side of the door, which will allow the door to be opened by a wheelchair footrest without creating a trap or hazardous condition. (See Figure 11A-8J).*

***Exception:** Automatic and sliding doors or gates.*

SECTION 1127A COMMON USE FACILITIES

***Note:** For Public Use Facilities see Chapter 11B of this code.*

***1127A.1 General.** When provided, common use areas and facilities in covered multifamily housing developments shall be accessible to persons with disabilities. Common use facilities include, but are not limited to, lobbies, toilet and bathing facilities, laundry facilities, community rooms, club-houses, health and fitness facilities, game rooms, and portions of common use tenant storage. All entrances, doors, fixtures and controls shall be on an accessible route. Facilities and fixtures required to be accessible shall comply with the following provisions:*

1. ***Doors.** Doors to accessible bathrooms shall comply with Section 1126A. Doors shall not swing into the floor space required for any fixture.*

2. ***Clear Floor Space.** All fixtures and controls shall be on an accessible route. Clear floor spaces at fixtures and controls, the accessible route, and the turning space may overlap. This clear space shall comply with Section 1127A.9.4 and 1127A.9.5.*

3. ***Water Closets.** Where a toilet stall is provided, it shall comply with Section 1127A.2.1 or 1127A.2.2, and its water closet shall comply with Section 1127A.2.3.*

4. ***Lavatory and Mirrors.** Where a lavatory and/or mirror is provided, it shall comply with Section 1127A.3 and/or 1127A.8.3.*

5. ***Controls and Dispensers.*** *Where controls, dispensers, receptacles, or other types of equipment are provided, at least one of each shall be on an accessible route and shall comply with Section 1127A.8 and 1127A.9.5.*

6. ***Bathing and Shower Facilities.*** *Where bathtubs or showers are provided, at least one fixture of each type provided shall be accessible per room. For bathtubs, see Section 1127A.5.2. For showers, see Section 1127A.5.3.*

7. ***Toilet Facilities.*** *Toilet facilities shall comply with Section 1127A.2.*

8. ***Laundry Facilities.*** *Laundry facilities shall comply with Section 1127A.10.*

9. ***Storage Facilities.*** *Storage facilities shall comply with Section 1127A.11.*

10. ***Fixed or Built-in Seating, Tables, and Counters.*** *Fixed or built-in seating, tables, and counters shall comply with Section 1127A.12.*

1127A.2 Toilet Facilities. *When common use toilet facilities are provided for residents or guests, at least one percent of the total number of fixtures but not less than one of each type shall comply with this section.*

1127A.2.1 Multiple-accommodation Toilet Facilities. *Multiple-accommodation toilet facilities shall have the following:*

Notes:

1. See definition in Chapter 2.
2. See Figure 11A-9A.

1. ***Wheelchair Clearance.*** *A clear space measured from the floor to a height of 27 inches (686 mm) above the floor, within the sanitary facility room, of sufficient size to inscribe a circle with a diameter not less than 60 inches (1524 mm), or a clear space 56 inches by 63 inches (1422 mm by 1600 mm) in size. Other than the door to the accessible water closet compartment, a door, in any position, may encroach into this space by not more than 12 inches (305 mm).*

2. ***Clear Space at Fixtures.*** *Doors shall not swing into the floor space required for any fixture.*

3. ***Accessible Water Closet Compartment.*** *A water closet fixture located in a compartment shall provide a minimum 28 inch (711 mm) wide clear space from a fixture, or a minimum 32 inch (813 mm) wide clear space from a wall at one side of the water closet. The other side of the water closet shall provide 18 inches (457 mm) from the centerline of the water closet to the wall. The stall shall be a minimum of 60 inches (1524 mm) wide. A minimum 48 inch (1219 mm) long clear space shall be provided in front of the water closet if the compartment has an end-opening door (facing the water closet). A minimum 60 inch (1524 mm) long clear space shall be provided in a compartment with the door located at the side.*

4. ***Grab Bars.*** *Grab bars shall be installed in accordance with Section 1127A.4 and shall not project more than 3 inches (76.2 mm) into the clear spaces.*

5. ***Compartment Doors.*** *Compartment doors shall comply with the following:*

5.1. The water closet compartment shall be equipped with a door that has an automatic-closing device, and shall have a clear, unobstructed opening width of 32 inches (813 mm) when located at the end and 34 inches (864 mm) when located at the side with the door positioned at an angle of 90 degrees from its closed position.

5.2. When standard compartment doors are used, with a minimum 9 inch (228.6 mm) clearance for footrests underneath and a self-closing device, clearance at the strike edge as specified in Section 1126A.3.2 is not required.

5.3. The inside and outside of the compartment door shall be equipped with a loop or U-shaped handle immediately below the latch. The latch shall be flip-over style, sliding, or other hardware not requiring the user to grasp or twist.

5.4. Except for door-opening widths and door swings, a clear, unobstructed access of not less than 44 inches (1118 mm) shall be provided to water closet compartments designed for use by persons with disabilities and the space immediately in front of a water closet compartment shall not be less than 48 inches (1219 mm) as measured at right angles to compartment door in its closed position.

6. ***Large Toilet Rooms.*** *Where six or more stalls are provided within a multiple-accommodation toilet room, at least one stall shall comply with Section 1127A.2.1, Items 2 and 3. At least one additional stall shall be 36 inches (914 mm) wide with an outward swinging self-closing door and grab bars complying with Sections 1127A.4.3, 1127A.4.4 and 1127A.4.5 installed on each compartment side wall.*

1127A.2.2 Single-accommodation Toilet Facilities. *Single-accommodation toilet facilities shall comply with the following:*

1. ***Wheelchair Clearance.*** *There shall be sufficient space in the toilet room for a wheelchair measuring 30 inches (762 mm) wide by 48 inches (1219 mm) long to enter the room and permit the door to close. There shall be in the room a clear floor space of at least 60 inches (1524 mm) in diameter, or a T-shaped space complying with Figure 11A-1D.*

2. ***Encroachment of Doors.*** *Doors shall not encroach into the clear floor space specified in item 1 of this section by more than 12 inches (305 mm), except for the panel door to any water closet compartment. (See Figure 11A-9B).*

3. ***Accessible Water Closet*** *The water closet shall be located in a space which provides a minimum 28 inch (711 mm) wide clear space from a fixture or a minimum 32 inch (813 mm) wide clear space from a wall at one side. The other side shall provide 18 inches (457 mm) from the centerline of the water closet to the wall. A minimum 48 inches (1219 mm) of clear space shall be provided in front of the water closet.*

4. ***Grab Bars.*** *Grab bars shall be installed in accordance with Section 1127A.4.*

5. ***Accessible Route.*** *All doors, fixtures and controls shall be on an accessible route. The minimum clear width of an accessible route shall be 36 inches (914 mm) except at doors see Section 1126A. If a person in a wheelchair must make a turn around an obstruction, the minimum clear width of the accessible route shall be as shown in Figure 11A-1C. (See also Figure 11A-9B).*

1127A.2.3 Water Closets. *Water closets required to be accessible shall comply with the following:*

1. ***Height.*** *The height of accessible water closets shall be a minimum of 17 inches (432 mm) to a maximum of 19 inches (483 mm) measured to the top of a maximum 2-inch (50.8 mm) high toilet seat.*

2. ***Controls.*** *Controls shall be operable with one hand and shall not require tight grasping, pinching or twisting. Controls for the flush valves shall be mounted on the wide side of toilet areas, no more than 44 inches (1118 mm) above the floor. The force required to activate controls shall be no greater than 5 pound force (lbf) (22.2 N).*

3. ***Toilet Seats.*** *Seats shall not be sprung to return to a lifted position.*

1127A.2.4 Accessible Urinals. *Urinals required to be accessible shall comply with the following:*

1. ***Height and Wall Projection.*** *Urinals shall be floor mounted or wall hung. Where one or more wall hung urinals are provided, at least one with a rim projecting a minimum of 14 inches (356 mm) to a maximum of 17 inches (432 mm) from the wall and a maximum of 17 inches (432 mm) above the floor shall be provided.*

2. ***Flush Controls.*** *Flush controls shall be operable with one hand, shall not require tight grasping, pinching or twisting of the wrist, and shall be mounted no more than 44 inches (1118 mm) above the floor. The force required to activate controls shall be no greater than 5 pound force (lbf) (22.2 N). Electronic automatic flushing controls are acceptable and preferable.*

3. ***Clear Floor Space.*** *Where urinals are provided, at least one shall have a clear floor space 30 inches by 48 inches (762 mm by 1219 mm) in front of the urinal to allow forward approach. This clear space shall comply with Sections 1127A.9.4 and 1127A.5.*

1127A.3 Accessible Lavatories. *When common use lavatories are provided for residents or guests, at least one, and not less than 1 percent of all lavatories, shall comply with the following:*

1. ***Location.*** *Lavatories shall be installed with the centerline of the fixture a minimum of 18 inches (457 mm) horizontally from an adjoining wall or fixture. The top of the fixture rim shall be a maximum of 34 inches (864 mm) above the finished floor.*

2. ***Floor space.*** *A clear maneuvering space at least 30 inches by 48 inches (762mm by 1219mm) shall be provided in front of accessible lavatories to allow forward approach. Such clear floor space shall adjoin or overlap an accessible route and shall not extend into the knee and toe space underneath the lavatory more than 19 inches (483 mm). This clear space shall comply with Section 1127A.9.5 for allowable reach ranges.*

3. ***Knee and Toe Space.*** *Knee and toe space (see Figure 11A-9D) shall be provided as follows:*

3.1. The knee space shall be at least 30 inches (762 mm) wide and 8 inches deep (203.2 mm).

3.2. The knee space shall be at least 29 inches (737 mm) high at the front face and reducing to not less than 27 inches (686 mm) at a point 8 inches (203.2 mm) back from the front edge.

3.3. Knee space required by this section shall be clear and unobstructed.

3.4. The toe space required in this section shall be provided as follows:

3.4.1. Shall be at least 30 inches (762 mm) wide and centered on the lavatory.

3.4.2. Shall be at least 17 inches (432 mm) deep, measured from the front edge.

3.4.3. Shall be at least 9 inches (228.6 mm) high from the floor.

4. ***Finished Floor*** *The finished floor beneath the lavatory shall be extended to the wall.*

5. ***Plumbing Protection.*** *Hot water and drain pipes accessible under lavatories shall be insulated or otherwise covered. There shall be no sharp or abrasive surfaces under lavatories.*

6. ***Lavatory Faucet Controls.*** *Faucet controls and operation mechanisms shall be operable with one hand and shall not require tight grasping, pinching or twisting of the wrist.*

The force required to activate controls shall be no greater than 5 pound force (lbf) (22.2N). Lever operated, push-type and electronically controlled mechanisms are examples of acceptable designs. Self-closing valves are allowed if the faucet remains open for at least 10 seconds.

1127A.4 Grab Bars, Tub and Shower Seats, Fasteners, and Mounting Devices.

1127A.4.1 General. *Grab bars, tub and shower seats, fasteners and mounting devices required by this chapter shall comply with this section.*

1127A.4.2 Location. *Grab bars which are located on each side, or on one side and the back, of the accessible toilet stall or compartment shall be securely attached and centered 33 inches (838 mm) above and parallel to the floor, except that, where a tank-type toilet obstructs placement at 33 inches (838 mm), the grab bar may be centered as high as 36 inches (914 mm). The space between the grab bar and objects below shall be a minimum of 1 1/2 inches (38.1 mm). Grab bars shall be at least 42 inches (1067 mm) in length with the front end positioned 24 inches (610 mm) in front of the water closet stool. Grab bars at the back shall not be less than 36 inches (914 mm) in length. (See Figures 11A-9A and 11A-9B).*

1127A.4.3 Diameter or Width. *The diameter or width of the gripping surfaces of a grab bar shall be 1 1/4 inches to 1 1/2 inches (31.75 mm to 38.1 mm) or of a shape that provides an equivalent gripping surface. If grab bars are mounted adjacent to a wall, the space between the wall and the grab bars shall be 1 1/2 inches (38.1 mm). (See Figure 11A-9C).*

1127A.4.4 Structural Strength. *The structural strength of grab bars, tub and shower seats, fasteners, and mounting devices shall meet the following specifications:*

1. Bending stress in a grab bar or seat induced by the maximum bending moment from the application of a 250-pound (1112 N) point load shall be less than the allowable stress for the material of the grab bar or seat.

2. Shear stress induced in a grab bar or seat by the application of a 250-pound (1112N) point load shall be less than the allowable shear stress for the material of the grab bar or seat, and if its mounting bracket or other support is considered to be fully restrained, then direct and torsional shear stresses shall not exceed the allowable shear stress.

3. Shear force induced in a fastener or mounting device from the application of a 250-pound (1112 N) point load shall be less than the allowable lateral load of either the fastener or mounting device or the supporting structure, whichever is the smaller allowable load.

4. Tensile force induced in a fastener by a direct tension force of a 250 pound (1112 N) point load, plus the maximum moment from the application of a 250-pound (1112 N) point load, shall be less than the allowable withdrawal load between the fastener and supporting structure.

5. Grab bars shall not rotate within their fittings.

1127A.4.5 Surface. *A grab bar and any wall or other surface adjacent to it shall be free of any sharp or abrasive elements. Edges shall have a minimum radius of 1/8 inch (3.17 mm).*

1127A.5 Bathing Facilities.

1127A.5.1 General. *When common use bathing facilities are provided for residents or guests, including showers, bathtubs or lockers, at least one of each type of fixture in each facility, and not less than 1 percent of all fixtures, shall comply with this section.*

1127A.5.2 Bathtubs. *Bathtubs required to be accessible shall comply with the following:*

1. ***Floor Space.*** *Clear floor space at bathtubs shall be as shown in Figure 11A-9E.*

2. ***Seat.*** *An in-tub seat or a seat at the head end of the tub shall be provided as shown in Figures 11A-9E and 11A-9F. The structural strength of seats and their attachments shall comply with Section 1127A.4.4. Seats shall be mounted securely and shall not slip during use.*

3. ***Grab Bars.*** *Grab bars complying with Sections 1127A.4.3, 1127A.4.4 and 1127A.4.5 shall be provided as shown in Figures 11A-9F and 11A-9G.*

4. ***Controls.*** *Faucets and other controls shall be located as shown in Figure 11A-9F. They shall be operable with one hand and shall not require tight grasping, pinching or twisting of the wrist. The force required to activate controls shall be no greater than a 5 pound force (lbf) (22.2 N).*

5. ***Shower Spray Unit.*** *A shower spray unit with a hose at least 60 inches (1524 mm) long that can be used both as a fixed shower head and as a hand-held shower shall be provided.*

6. ***Bathtub Enclosures.*** *If provided, enclosures for bathtubs shall not obstruct controls or transfer from wheelchairs onto bathtub seats or into tubs. Enclosures on bathtubs shall not have tracks mounted on their rims.*

1127A.5.3 Showers. *Showers required to be accessible shall comply with the following:*

*1. **Size.** Showers shall be consistent with one of the following: (1) 60 inches (1524 mm) minimum in width between wall surfaces and 30 inches (762 mm) minimum in depth with a full opening width on the long side; or (2) 42 inches (1067 mm) in width between wall surfaces and 48 inches (1219 mm) minimum in depth with an entrance opening of 42 inches (1067 mm) ; or (3) showers 60 inches (1524 mm) minimum in width may be 36 inches (914 mm) minimum in depth as long as the entrance opening width is a minimum 36 inches (914 mm).*

*2. **Thresholds.** When a threshold or recessed drop is permitted, it shall be a maximum of 1/2 inch (12.7 mm) in height and shall be beveled or sloped at an angle not exceeding 45 degrees (100 percent gradient) from the horizontal.*

*3. **Multiple Showers.** Where, within the same functional area, two or more accessible showers are provided, there shall be at least one shower constructed opposite hand from the other or others (i.e., one left-hand control versus right-hand controls).*

*4. **Accessories.** Shower accessories shall include:*

*4.1. **Water Controls.** Water controls of a single-lever design shall be located on the side wall of the compartment adjacent to the seat and operable with a maximum force of 5 lb (22.2N), mounted at 40 inches (1016 mm) [plus or minus 1 inch (25.4 mm) tolerance] above the shower floor. The centerline of the controls shall be within a reach range of no less than 18 inches (457mm) and no more than 24 inches (610 mm) from the rear edge of the seat.*

*4.2. **Hand-held Sprayer Unit.** A flexible handheld sprayer unit with a hose at least 60 inches (1524 mm) long shall be provided within reach range of the seat at a distance not to exceed 27 inches (686 mm) horizontally measured from the rear seat edge to the centerline of the mounting bracket. This unit shall be mounted at a maximum height of 48 inches (1219 mm) [plus or minus 1 inch (25.4 mm) tolerance] above the shower floor.*

*4.3. **Sprayer Unit Alternative.** Where accessible shower facilities are provided in areas subject to excessive vandalism, in lieu of providing the fixed flexible hose, two wall-mounted shower heads shall be installed. Each shower head shall be installed so that it can be operated independently of the other and shall have swivel angle adjustments, both vertically and horizontally. One shower head shall be located at a height of 48 inches (1219 mm) [plus or minus 1 inch (25.4 mm) tolerance] above the floor.*

*4.4. **Floor Slope.** The maximum slope of the floor shall be 2 percent per foot in any direction. Where drains are provided, grate openings shall be a maximum of 1/4 inch (6.35 mm) and located flush with the floor surface.*

*5. **Shower Fixtures.** Shower fixtures shall include:*

5.1. A folding seat located within 27 inches (686 mm) of the controls, mounted 18 inches (457 mm) above the floor, and with a minimum space of 1 inch (25.4 mm) and maximum space of 1½ inches (38.1 mm) allowed between the edge of the seat and any wall. When folded, the seat shall not extend more than 6 inches (152.4 mm) from the mounting wall. (See Figures 11A-9H, 11A-9I, 11A-9J, and 11A-9K).

5.2. Grab bars located on walls adjacent to and opposite the seat. Grab bars shall comply with the diameter, loading and projection requirements of Sections 1127A.4.3, 1127A.4.4 and 1127A.4.5. Grab bars shall be mounted between a minimum of 33 inches (838 mm) and a maximum of 36 inches (914 mm) above the shower floor with an L-shaped grab bar mounted on walls opposite and adjacent to the front edge of the seat, but not extended to include that portion of wall over the seat. (See Figure 11A-9H or 11A-9I).

*6. **Soap Dish.** When a soap dish is provided, it shall be located on the control wall at a maximum height of 40 inches (1016 mm) above the shower floor, and within reach limits from the seat.*

*7. **Enclosures.** Enclosures, when provided for shower stalls, shall not obstruct transfer from wheelchairs onto shower seats.*

***Note:** See Figures 11A-9H, 11A-9I, 11A-9J, and 11A-9K.*

1127A.5.3.1 Open Showers. *Where no separate shower compartments are provided, the shower for persons with disabilities shall be located in a corner with L-shaped grab bars extending along two adjacent walls with a folding seat adjacent to the shower controls. (See Figures 11A-9H, 11A-9I, 11A-9J, and 11A-9K).*

1127A.6 Lockers.

1127A.6.1 General. *Where lockers are provided for residents or guests, at least one locker and not less than 1 percent of all lockers shall be accessible to persons with disabilities. A path of travel not less than 36 inches (914 mm) in clear width shall be provided to these lockers. See Section 1127A.9 for required clear space, allowable reach ranges, and requirements for control and operating mechanisms.*

1127A.7 Signs

1127A.7.1 General. *All accessible toilet and bathing facilities shall be identified by the "International Symbol of Accessibility". Signs need not be provided for facilities within a dwelling unit or guest room.*

1127A.7.2 Identification Symbols. *Doorways leading to men's sanitary facilities shall be identified by an equilateral triangle 1/4 inch thick (6.4 mm) with edges 12 inches (305 mm) long and a vertex pointing upward. Women's sanitary facilities shall be identified by a circle, 1/4 inch thick (6.4mm) and 12 inches (305mm) in diameter. Unisex sanitary facilities shall be identified by a circle 1/4 inch thick (6.4 mm), 12 inches (305 mm) in diameter with a 1/4 inch thick (6.4 mm) triangle superimposed on the circle and within the 12 inch (305 mm) diameter. These geometric symbols shall be centered on the door at a height of 60 inches (1524 mm) and their color and contrast shall be distinctly different from the color and contrast of the door.*

Note: *See also Section 1143A.10 for additional signage requirements applicable to sanitary facilities.*

1127A.8 Toilet Room Fixtures and Accessories.

1127A.8.1 Towel, Sanitary Napkins, Waste Receptacles. *Where towel, sanitary napkins, waste receptacles, and other similar dispensing and disposal fixtures are provided, at least one of each type shall be located with all operable parts, including coin slots, within 40 inches (1016 mm) from the finished floor. Controls and operating mechanisms shall comply with Section 1127A.9.6.4.*

1127A.8.2 Toilet Tissue Dispensers. *Toilet tissue dispensers shall be located on the wall within 12 inches (305 mm) of the front edge of the toilet seat. Dispensers that control delivery or that do not permit continuous paper flow shall not be used. (See Figure 11A-9B).*

1127A.8.3 Mirrors. *Where mirrors are provided, at least one shall be accessible. Mirrors shall be mounted with the bottom edge no higher than 40 inches (1016 mm) from the floor.*

1127A.9 Space Allowances and Reach Ranges in Common Use Areas

1127A.9.1 Wheelchair Passage Width*. The minimum clear width for single wheelchair passage shall be 36 inches (914 mm) continuously. (See Figure 11A-1E).*

> ***Exception:*** *32 inches (813 mm) in width is acceptable at a point not to exceed 24 inches (610 mm) in length.*

1127A.9.2 Width for Wheelchair Passing. *The minimum width for two wheelchairs to pass is 60 inches (1524 mm). (See Figure 11A-1F).*

1127A.9.3 Wheelchair Turning Space. *The space required for a wheelchair to make a 180 degree turn is a clear space of 60 inches (1524 mm) diameter (See Figure 11A-1D(a) or a T-shaped space see Figure 11A-1D(b)).*

1127A.9.4 Clear Floor or Ground Space for Wheelchairs.

1127A.9.4.1 Size and Approach. *The minimum clear floor or ground space required to accommodate a single, stationary wheelchair and occupant is 30 inches by 48 inches (762 mm by 1219 mm). See Figure 11A-1G. The minimum clear floor or ground space for wheelchairs may be positioned for forward or parallel approach to an object, see Figure 11A-1G. Clear floor or ground space for wheelchairs may be part of the knee space required under some objects.*

1127A.9.4.2 Relationship of Maneuvering Clearances to Wheelchair Spaces. *One full unobstructed side of the clear floor or ground space for a wheelchair shall adjoin or overlap an accessible route or adjoin another wheelchair clear floor space. If a clear floor space is located in an alcove or otherwise confined on all or a part of three sides, additional maneuvering clearances shall be provided as shown in Figure 11A-1H.*

1127A.9.4.3 Surfaces of Wheelchair Spaces. *Clear floor or ground spaces for wheelchairs shall comply with Sections 1119A.2, 1120A.3 and 1121A.*

1127A.9.4.3.1 Gratings. *Gratings located in ground and floor surfaces along accessible routes shall be limited to spaces no greater than ½-inch (12.7 mm) wide in one direction. If gratings have elongated openings, they shall be placed so that the long dimension is perpendicular to the dominate direction of traffic.*

1127A.9.5 Reach Ranges

1127A.9.5.1 Forward Reach. *If the clear floor space allows only forward approach to an object, the maximum high forward reach allowed shall be 48 inches (1219 mm) and the minimum low forward reach shall be unobstructed and no less than 15 inches (381 mm) above the floor (see Figure. 11A-1I(a). If the high forward reach is over an obstruction, reach and clearances shall be as shown in Figure 11A-1I(b).*

1127A.9.5.2 Side Reach. *If the clear floor space allows parallel approach by a person in a wheelchair, the maximum high side reach allowed shall be 54 inches (1372 mm) and the low side reach shall be no less than 9 inches (228.6 mm) above the floor (see Figure 11A-1J(a) and 11A-1J(b)). If the side reach is over an obstruction, the reach and clearances shall be as shown in Figure 11A-1J(c).*

1127A.9.6 Controls and Operating Mechanisms*.*

Note: *See also Section 1142A, for electrical installation.*

1127A.9.6.1 General. *Controls and operating mechanisms in accessible spaces, along accessible routes, or as part of accessible elements (e.g., light switches and dispenser controls) shall comply with this section.*

1127A.9.6.2 Clear Floor Space. *Clear floor space complying with Section 1127A.9.4 that allows a forward or parallel approach by a person using a wheelchair shall be provided at controls, dispensers, receptacles and other operable equipment.*

1127A.9.6.3 Height. *Controls shall be located no higher than 48 inches (1219 mm), and no lower than 15 inches (381 mm), above the finished floor measured to the center of the grip. If the reach is over an obstruction (for example, washer or dryer) between 20 and 25 inches (508 and 635 mm) in depth, the maximum height is reduced to 44 inches (1118 mm) for forward approach, or 46 inches (1168 mm) for side approach, provided the obstruction is no more than 24 inches (610 mm) in depth. Controls that do not satisfy these specifications are acceptable provided that comparable controls or outlets, that perform the same functions, are provided within the same area and are accessible.*

1127A.9.6.4 Operation. *Controls and operating mechanisms shall be operable with one hand and shall not require tight grasping, pinching or twisting of the wrist. The force required to activate controls shall be no greater than 5 pounds (22.2 N) of force.*

1127A.10 Common Accessible Laundry Rooms
1127A.10.1 General. *Where common use laundry rooms are provided, at least one of each type of appliance provided in each laundry area shall be accessible, shall be on an accessible route, and shall comply with this section. Such appliances include clothes washing machines, dryers, soap dispensers, and any related features such as wash sinks, tables, and storage areas.*

Where laundry rooms are provided on floors of an elevator building, each laundry room shall be accessible. Where there is one laundry room on a ground floor in each building, each laundry room shall be accessible. Where there is a laundry room on the ground floor of a building and another located in the basement, it is acceptable to have only the ground floor laundry room accessible.

1127A.10.2 Clear Floor Space *There shall be a minimum clear space 30 inches perpendicular by 48 inches parallel (762 mm by 1219 mm) in front of clothes washers and dryers required to be accessible.*

There shall be a minimum clear space 30 inches by 48 inches (762mm by 1219 mm) provided for at least one of each type of fixture or appliance provided in the laundry room (e.g. soap dispensers, wash sinks, tables, storage areas).

1127A.10.3 Controls *Clothes washers and dryers including stacked clothes washers and dryers required to be accessible shall have controls (including coin slots) within the reach range of a seated user. Controls shall be located no higher than 48 inches (1219 mm), and no lower than 15 inches (381 mm), above the finished floor measured to the center of the grip. If the reach is over an obstruction (for example, washer or dryer) between 20 and 25 inches (508 and 635 mm) in depth, the maximum height is reduced to 44 inches (1118 mm) for forward approach, or 46 inches (1168 mm) for side approach. Controls that do not satisfy these specifications are acceptable provided that comparable controls or outlets, that perform the same functions, are provided within the same area and are accessible.*

Controls shall be operable with one hand and not require tight grasping, pinching, or twisting of the wrist.

1127A.10.4 Washing Machines and Clothes Dryers. *Washing machines and clothes dryers in accessible common-use laundry rooms shall be front loading.*

1127A.11 Storage

1127A.11.1 General. *If fixed storage facilities such as cabinets, shelves, closets or drawers are provided where access is required by Sections ~~101.17.9.1~~ 108.2.1.2 and 1102A, at least one of each type of facility provided shall comply with this section. Additional storage may be provided outside of the reach ranges shown in Figure 11A-1J.*

1127A.11.2 Clear Floor Space. *A clear floor space at least 30 inches by 48 inches (762 mm by 1219 mm) complying with Section 1127A.9.4 that allows either a forward or parallel approach by a person using a wheelchair shall be provided at accessible storage facilities.*

1127A.11.3 Height. *Accessible storage spaces shall be within at least one of the reach ranges specified in Section 1127A.9.5. Clothes rods shall be a maximum of 54 inches (1372 mm) from the floor for a side approach (see Figure 11A-1J).Where the distance from the wheelchair to the clothes rod or shelf exceeds 10 inches (254 mm), as in closets without accessible doors, the height and depth to the rod or shelf shall comply with Figure 11A-1J.*

1127A.11.4 Hardware. *Hardware for accessible storage facilities shall comply with Section 1127A.9.6. Touch latches and U-shaped pulls are acceptable.*

1127A.12 Fixed or Built-In Seating, Tables, and Counters

1127A.12.1 Minimum Number. *Where fixed or built-in seating, tables, or counters are provided for residents or guests, 5 percent, but not less than one, shall be accessible as provided in this section.*

1127A.12.2 Seating. *When seating spaces for persons in wheelchairs are provided at fixed tables or counters, clear floor space complying with Section 1127A.9.4 shall be provided. Such clear floor space shall not overlap knee space by more than 19 inches (483 mm). (See Figure 11A-1K).*

1127A.12.3 Knee Clearance. *When seating for persons in wheelchairs is provided at fixed tables or counters, knee spaces at least 27 inches (686 mm) high, 30 inches (762 mm) wide and 19 inches (483 mm) deep shall be provided. (See Figure 11A-1K).*

1127A.12.4 Height of Work Surfaces. *The tops of tables and counters shall be 28 inches to 34 inches (711 mm to 864 mm) from the floor or ground.*

Division IV — DWELLING UNIT FEATURES

Division IV Table of Contents

Section 1128A Covered Dwelling Units
Section 1129A Reserved
Section 1130A Accessible Route within Covered Multifamily Dwelling Units
Section 1131A Changes in Level
Section 1132A Doors
Section 1133A Kitchens
Section 1134A Bathing and Toilet Facilities
Section 1135A Laundry Rooms
Section 1136A Electrical Receptacle, Switch and Control Heights.

SECTION 1128A — COVERED DWELLING UNITS

1128A.1 General. *Covered multifamily dwelling units shall be adaptable and accessible into and throughout the dwelling unit as provided in this Division.*

Note: *See Sections 1101A "Application" and 1102A "Building Accessibility" for dwelling units required to comply with this Division.*

SECTION 1129A RESERVED

SECTION 1130A ACCESSIBLE ROUTE WITHIN COVERED MULTIFAMILY DWELLING UNITS

1130A.1 General. *An accessible route shall be provided through all rooms and spaces of the dwelling unit. The accessible route shall pass through the primary entry door, and shall connect with all additional exterior doors, required clear floor spaces at kitchen appliances, and bathroom fixtures. For the purpose of this section, "accessible routes" may include hallways, corridors, and ramps.*

> ***Exception:*** *An accessible route is not required from the interior of the unit into a basement or garage, except as provided in Section 1105A.1.*

1130A.2 Width. *The accessible route into and throughout covered multifamily dwelling units shall be at least 36 inches (914 mm) wide.*

SECTION 1131A CHANGES IN LEVEL ON ACCESSIBLE ROUTES

1131A.1 Changes in Level Not Exceeding One-Half Inch*. Abrupt changes in level along any accessible route shall not exceed ½ inch (12.7 mm). When changes in level do occur, they shall be beveled with a slope no greater than 1 unit vertical in 2 units horizontal (50% slope). Changes in level not exceeding ¼ inch (6.35 mm) may be vertical.*

1131A.2 Changes Greater Than One-Half Inch. *Changes in level greater than ½ inch (12.7 mm) shall be made by means of a ramp, elevator or special access lift. See Section 1122A for ramps and Section 1124A.11 for special access lifts.*

SECTION 1132A DOORS

1132A.1 Primary Entry Doors and Required Exit Doors. *The primary entry door and all required exit doors shall comply with the requirements of this section. The requirements of Sections 1126A.3 shall apply to maneuvering clearances at the side of the door exposed to common or public use spaces (e.g. entry or exit doors which open from the covered multifamily dwelling unit into a corridor, hallway, or lobby, or directly to the outside).*

1132A.2 Interior Doors and Secondary Exterior Doors. *Doors intended for user passage and secondary exterior doors shall comply with this section. The provisions of this section shall apply to the dwelling unit side of doors leading from the interior of the dwelling unit to an unfinished basement or a garage attached to a single-story dwelling unit.*

1132A.3 Width and Height of Doors. *Doors shall comply with the following:*

1. Doors shall not be less than 6 feet 8 inches (2032 mm) in height.

2. Swinging doors shall provide a net clear opening width of not less than 32 inches (813 mm), measured with the door or doors positioned at an angle of 90 degrees from the closed position. A 34-inch (864 mm) door is acceptable. The primary entry door and all required exit doors shall comply with the requirements of Section 1126A.1.

3. Swinging doors shall be capable of opening at least 90 degrees.

4. A nominal 32-inch (813 mm) clear opening provided by a standard 6-foot wide (1829 mm) sliding patio door assembly is acceptable.

5. A pair of doors, manual or automatic, must have at least one leaf which provides a clear width of not less than 32 inches (813 mm), measured with the door positioned at an angle of 90 degrees from its closed position.

6. The width of any component in the means of egress system shall not be less than the minimum width required by Section 1003.2.3.

1132A.4 Level Floor or Landing. *See also Chapter 10, Section 1003.3.1.6.2. The floor or landing on each side of a door shall be level. Primary entry doors, required exit doors, or secondary exterior doors with changes in height between the interior surface or floor level and the exterior surface or floor level shall comply with the following:*

1. Exterior landings of impervious construction (e.g., concrete, brick, flagstone) serving primary entry doors and required exit doors are limited to not more than 1/2 inch of change in height between floor surfaces. Changes in level shall comply with Section 1131A.

2. Exterior landings of pervious construction (e.g., wood decking with spaces) shall be the same level as the interior landing, except that secondary exterior doors may have no more than 1/2 inch of change in height between floor surfaces. Changes in level shall comply with Section 1131A.

3. Secondary exterior doors onto decks, patios, or balcony surfaces constructed of impervious materials (e.g., concrete, brick, flagstone) may have a maximum change in height from the interior landing of 4 inches. Changes in height greater than 1/2 inch (12.7 mm) shall be accomplished by means of a ramp.

4. In buildings containing covered multifamily dwelling units, the floor or landing immediately outside the entry may be sloped up to 1/4 inch (6.35 mm) per foot (12 inches) (305 mm), in a direction away from the primary entrance of the dwelling unit for drainage.

1132A.4.1 Thresholds. *Thresholds at the primary entry and required exit doors shall be no higher than 1/2 inch (12.7 mm). Thresholds at secondary exterior doors, including sliding door tracks, shall be no higher than 3/4 inch (19.05 mm). Changes in height at interior door thresholds (e.g. floor material changes at door thresholds) shall not exceed 1/2 inch (12.7 mm). Thresholds shall comply with the following:*

1. Thresholds with a change in height of not more than 1/4 inch (6.35 mm) may be vertical.
2. Thresholds with a change in height between 1/4 inch (6.35 mm) and 3/4 inch (19.05 mm) shall be beveled with a slope no greater than 1 unit vertical in 2 units horizontal (50% slope).

1132A.5 Maneuvering Clearances at Doors.

1132A.5.1 General. *Maneuvering clearances at interior doors shall provide a minimum length on both sides of the door of at least 42 inches (1067 mm) measured at a right angle to the plane of the door in its closed position.*

Exceptions:

1. A 39 inch (991 mm) length is acceptable when a minimum clear opening width of 34 inches (864 mm) is provided.

2. The floor or landing on the dwelling unit side of the primary entry door and any required exit door shall have a minimum length of not less than 44 inches (1118 mm). Section 1126A.3 shall apply to maneuvering clearances at the side of the door exposed to common or public use spaces.

Note: *See Section 1110A.5.3, item #4.*

1132A.5.2 Strike Edge Maneuvering Space at Doors. *The width of the level area on the side to which the door swings shall extend 18 inches (457 mm) past the strike edge for all doors. The width of the level area at the exterior side of the primary entry door and any required exit doors shall comply with Section 1126A.*

Notes:

1. See Section 1134A for bathrooms that are required to be accessible.

2. Twenty four inches (610 mm) is the preferred for strike edge clearance.

1132A.6 Closer-Effort to Operate Doors*. Maximum effort to operate doors shall not exceed 8½ pounds (38 N) for exterior doors and 5 pounds (22 N) for interior doors, such pull or push effort being applied at right angles to hinged doors and at the center plane of sliding or folding doors. Compensating devices or automatic door operators may be utilized to meet these standards. When fire doors are required, the maximum effort to operate the door may be increased to the minimum allowable by the appropriate enforcement agency, not to exceed 15 pounds (66.7 N).*

1132A.7 Type of Lock or Latch. *The type of latch and lock required for all doors shall be in accordance with Chapter 10, Section 1003.3.1.8.*

1132A.8 Hand-Activated Door Hardware. *Hand-activated door latching, locking, and opening hardware shall be centered between 30 inches (762 mm) and 44 inches (1118 mm) above the floor. Latching and locking doors that are hand-activated and on an accessible route shall be operable with a single effort by lever-type hardware, panic bars, push-pull activating bars, or other hardware designed to provide passage without requiring the ability to grasp the opening hardware. Locked exit doors shall operate consistent with Section 1132A.6, in the direction of egress.*

1132A.8.1 Lever Type Hardware. *The lever or lever of actuated latches or locks shall be curved with a return to within 1/2 inch of the door to prevent catching on the clothing of persons during egress in Group R and U Occupancies with an occupant load greater than 10.*

1132A.9 Smooth Surface. *The bottom 10 inches (254 mm) of all doors shall have a smooth, uninterrupted surface to allow the door to be opened by a wheelchair footrest without creating a trap or hazardous condition. Where narrow frame doors are used, a 10 inch (254 mm) high smooth panel shall be installed on the push side of the door which will allow the door to be opened by a wheelchair footrest without creating a trap or hazardous condition. (See Figure 11A-8J).*

Exception: *Automatic and sliding doors.*

1132A.10 Door Signal Devices. *Every primary entrance to a covered multifamily dwelling unit shall be provided with a door buzzer, bell, chime or equivalent , The activating mechanism shall be mounted a maximum of 48 inches (1219 mm) above the floor and connected to permanent wiring.*

SECTION 1133A KITCHENS

1133A.1 General. *Kitchens shall be on an accessible route and shall comply with this section.*

1133A.2 Clear Floor Space. *Clear floor space at kitchens shall comply with the following:*

1. A clear floor space at least 30 inches (762 mm) by 48 inches (1219 mm) that allows a parallel approach by a person in a wheelchair shall be provided at the range or cooktop.

2. A clear floor space at least 30 inches (762 mm) by 48 inches (1219 mm) that allows either a parallel or forward approach shall be provided at the kitchen sink and all other fixtures or appliances including the oven, dishwasher, refrigerator/freezer and trash compactor.

3. The centerline of the 30 inch (762 mm) by 48 inch (1219 mm) clear floor space provided for parallel or forward approach shall be aligned with the centerline of the appliance or fixture. (See Figure 11A-10A).

1133A.2.1 Clear Width. *Kitchens shall have a minimum clear width measured between any cabinet, countertop, or the face of any appliance (excluding handles and controls) that projects into the kitchen and the opposing cabinet, countertop, appliance, or wall as follows:*

1. U-shaped kitchens, designed with parallel approach at a range or cooktop located at the base of the U, shall have a minimum clear width of at least 60 inches (1524 mm). (See Figure 11A-10A).

2. U-Shaped kitchens, designed with a cooktop or sink located at the base of the U which provides a 30 inch (762 mm) wide knee space to a height of 27 inches (686 mm) above the floor to allow for a forward approach, shall have a clear width of at least 48 inches (1219 mm). (See Figure 11A-10A).

3. All other kitchen designs shall provide a minimum clear width of at least 48 inches (1219 mm). (See Figure 11A-10A).

1133A.3 Removable Base Cabinets. *Base cabinets directly under the kitchen sink counter area, including toeboard and shelving, shall be removable without the use of specialized tools or specialized knowledge in order to provide clearance for a wheelchair. The finish floor beneath the kitchen sink counter area shall be extended to the wall.*

1133A.4 Countertops. *Kitchen countertops shall comply with this section and shall be provided with the following (see Section 1133A.4.1 for repositionable countertop requirements):*

1. A minimum linear length of 30 inches (762 mm) of countertop shall be provided for the kitchen sink installation.

2. A minimum linear length of 30 inches (762 mm) of countertop shall be provided for a work surface.

3. The sink and work surface may be a single integral unit a minimum of 60 inches (1524 mm) in length, or be separate components.

Exception: *Two 15-inch (381 mm) minimum width breadboards may be provided in lieu of the required 30 inches (762 mm) of countertop work surface.*

1133A.4.1 Repositionable Countertops. *Repositionable countertops shall be provided in a minimum of five percent of the covered multifamily dwelling units. Repositionable countertops shall comply with the following:*

1. The kitchen sink and work surface space required by 1133A.4 shall be designed to enable repositioning to a minimum height of 28 inches (711 mm).

2. Base cabinets directly under the kitchen sink and work surface shall be removable to provide clearance for a wheelchair.
3. The sides of adjacent cabinets and the back wall, which may become exposed to moisture or food handling when a countertop is lowered, shall be constructed of durable, nonabsorbent materials appropriate for such uses.

4. Finished flooring shall be extended to the wall beneath the sink and work surface.

Exceptions:

1. Stone, cultured stone and tiled countertops may be used without meeting the repositioning requirements.

2. Two 15-inch (381 mm) minimum width breadboards may be provided in lieu of the required 30 inches (762 mm) of countertop work surface.

1133A.5 Lower Shelving. *Lower shelving and/or drawer space shall be provided in the kitchen at a height of no more than 48 inches (1219 mm) above the floor.*

1133A.6 Kitchen Sink Faucet Controls. *Faucet controls and operating mechanisms shall be operable with one hand and shall not require tight grasping, pinching or twisting of the wrist.*

The force required to activate controls shall be no greater than 5 pound force (22.2N). Lever-operated, push-type and electronically controlled mechanisms are examples of acceptable designs. Self-closing valves are allowed if the faucet remains open for at least 10 seconds.

SECTION 1134A BATHING AND TOILET FACILITIES

1134A.1 General. *All bathrooms, bathing and toilet facilities within covered multifamily dwelling units shall comply with this section.*

1134A.2 Number of Complying Bathrooms. *Bathrooms shall be designed to comply with one of the following options:*

Option 1. *All bathrooms within the dwelling unit shall be designed to comply with the following:*

1. *Toilet, bathing and shower facilities shall comply with Section 1134A.4.*
2. *Bathtubs shall comply with Section 1134A.5.*
3. *Showers shall comply with Section 1134A.6.*
4. *Water closets shall comply with Section 1134A.7.*
5. *Lavatories, vanities, mirrors and towel fixtures shall comply with 1134A.8.*
6. *Bathrooms shall be provided with an accessible route into and through the bathroom.*
7. *If a door is provided, it shall comply with the requirements of Section 1132A.5.*
8. *A minimum 18-inch (457 mm) clear maneuvering space shall be provided on the swing side of the door at the strike edge of the door.*
9. *Switches, outlets, and controls shall comply with Section 1142A.*
10. *Reinforced walls to allow for the future installation of grab bars around the toilet, tub, and shower shall comply with Sections 1134A.5 for bathtubs, 1134A.6 for showers and 1134A.7 for water closets. Grab bars shall comply with Section 1127A.4.*

Option 2. *Only one bathroom within the dwelling unit shall be designed to comply with the following:*

1. *Toilet, bathing and shower facilities shall comply with Section 1134A.4.*
2. *Bathtubs shall comply with Section 1134A.5.*
3. *Showers shall comply with Section 1134A.6.*
4. *Water closets shall comply with Section 1134A.7.*
5. *Lavatories, vanities, mirrors and towel fixtures shall comply with 1134A.8.*
6. *Where both a tub and shower are provided in the bathroom, at least one shall be made accessible. See Section 1134A.5 for bathtubs, or Section 1134A.6 for showers.*
7. *When two or more lavatories are provided, at least one shall be made accessible and comply with Section 1134A.8.*

8. Bathrooms shall be provided with an accessible route into and through the bathroom.

9. If a door is provided, it shall comply with the requirements of Section 1132A.5.

10. A minimum 18 inch (457 mm) clear maneuvering space shall be provided on the swing side of the door at the strike edge of the door.

11. Switches, outlets, and controls shall comply with Section 1142A.

12. Reinforced walls to allow for the future installation of grab bars around the toilet, tub, and shower shall comply with Sections 1134A.5 for bathtubs, 1134A.6 for showers and 1134A.7 for water closets. Grab bars shall comply with Section 1127A.4.

When Option 2 is used, all additional bathrooms must comply with items 8 through 12 above.

1134A.3 Powder Rooms. *All powder rooms located on floor levels required to be accessible shall comply with items 1 through 6 of this section. When the powder room is the only toilet facility located on an accessible level, it shall comply with items 1 through 7 of this section.*

1. ***Accessible Route.*** *Powder rooms shall be provided with an accessible route into and through the powder room and shall comply with Section 1134A.4.*

2. ***Doors.*** *If a door is provided it shall comply with the requirements of Section 1132A.5.*

3. ***Water Closets.*** *Water closets shall comply with Section 1134A.7.*

4. ***Lavatories, Vanities, Mirrors and Towel Fixtures.*** *Lavatories, Vanities, mirrors and towel fixtures shall comply with 1134A.8.*

5. ***Strike Edge Maneuvering Space.*** *A minimum 18 inch (457 mm) clear maneuvering space shall be provided on the swing side of the door at the strike edge of the door.*

6. ***Accessible Switches, Outlets, and Controls.*** *Switches, outlets, and controls shall comply with Section 1142A.*

7. ***Reinforced Walls for Grab Bars.*** *Reinforced walls to allow for the future installation of grab bars around the toilet shall comply with Section 1134A.7 for water closets. Grab bars shall comply with Section 1127A.4.*

1134A.4 Sufficient Maneuvering Space. *Bathing and toilet facilities required to be adaptable shall provide sufficient maneuvering space for a person using a wheelchair or other mobility aid to enter and close the door, use the fixtures, reopen the door and exit.*

Where the door swings into the bathroom or powder room, there shall be a clear maneuvering space outside the swing of the door of at least 30 inches by 48 inches (762 mm by 1219 mm)] within the room. The clear maneuvering space shall allow the user to position a wheelchair or other mobility aid clear of the path of the door as it is closed and to permit use of fixtures.
Doors may swing into the required clear space at any fixture when a clear maneuvering space is provided outside the swing arc of the door so it can be closed.

Maneuvering spaces may include any kneespace or toespace available below bathroom fixtures.

1134A.5 Bathtubs. *Bathtubs required to be accessible shall comply with this section.*

1. ***Floor Space.*** *There shall be a minimum clear floor space 48 inches parallel by 30 inches perpendicular (1219 mm by 762 mm) to the side of a bathtub or bathtub-shower combination (measured from the foot or drain end of the bathtub) to provide for the maneuvering of a wheelchair and transfer to and from the bathing facilities. The area under a lavatory may be included in the clear floor space provided the knee and toe space comply with Section 1134A.8. Cabinets under lavatories and toilets shall not encroach into the clear floor space.*

2. ***Reinforced Walls for Grab Bars.*** *A bathtub installed without surrounding walls shall provide reinforced areas for the installation of floor-mounted grab bars.*

Where a bathtub is installed with surrounding walls, grab bar reinforcement shall be located on each end of the bathtub, 32 inches to 38 inches (813 mm to 965 mm) above the floor, extending a minimum of 24 inches (610 mm) from the front edge of the bathtub toward the back wall of the bathtub. The grab bar reinforcement shall be a minimum of 6 inches (152.4 mm) nominal in height. (See Figure 11A-9G).

Grab bar reinforcement shall be installed on the back wall of the bathtub a maximum of 6 inches (152.4 mm) above the bathtub rim extending upward to at least 38 inches (965 mm) above the floor. Grab bar backing shall be installed horizontally to permit the installation of a 48-inch (1219 mm) grab bar with each end a maximum of 6 inches (152.4 mm) from the end walls of the bathtub. The grab bar reinforcement shall be a minimum of 6 inches (152.4 mm) nominal in height.

3. ***Bathtub Controls.*** *Faucet controls and operation mechanisms shall be operable with one hand and shall not require tight grasping, pinching or twisting of the wrist.*

The force required to activate controls shall be no greater than 5 pound-force (22.2N). Lever operated, push-type and electronically controlled mechanisms are examples of acceptable designs.

4. ***Shower Unit.*** *A shower spray unit is not required in bathtubs.*

5. ***Bathtub Enclosures.*** *Doors and panels of bathtub enclosures shall be substantially constructed from approved, shatter-resistant materials. Hinged doors shall open outward. Glazing used in doors and panels of bathtub enclosures shall be fully tempered, laminated safety glass or approved plastic. When glass is used, it shall have minimum thickness of not less than 1/8 inch (3.17 mm) when fully tempered, or 1/4 inch (6.35 mm) when laminated, and shall pass the test requirements of this Part, Chapter 24 Glass and Glazing. Plastics used in doors and panels of bathtub enclosures shall be of a shatter-resistant type.*

1134A.6 Showers. *Showers required to be accessible shall comply with this section.*

1. ***Size.*** *When a shower stall is provided, at least one shower stall shall measure at least 42 inches wide by 48 inches deep (1067 mm by 1219 mm) with an entrance opening of at least 36 inches (914 mm). The maximum slope of the shower floor shall be 1/2 inch (12.7 mm) per foot in any direction and shall slope toward the rear to a drain located within 6 inches (152.4 mm) of the rear wall. The floor surfaces shall be of Carborundum or grit-faced tile or of material providing equivalent slip resistance.*

2. ***Floor Space.*** *A clear maneuvering space at least 30 inches in width by 48 inches in length (762mm by 1219mm) shall be located outside the shower, flush and parallel to the control wall.*

3. ***Reinforced Walls for Grab Bars.*** *Grab bar reinforcement shall be installed continuous in the walls of showers 32 inches to 38 inches (813 mm to 965 mm) above the floor. The grab bar reinforcement shall be a minimum of 6 inches (152.4 mm) nominal in height.*

Glass- walled shower stalls shall provide reinforcement for installation of floor-mounted or ceiling-mounted grab bars.

4. ***Thresholds.*** *When a threshold (a recessed drop) is used, it shall be a maximum of 1/2 inch (12.7 mm) in height and have a beveled or sloped angle not exceeding 45 degrees from the horizontal.*

5. ***Shower Controls.*** *Faucet controls and operation mechanisms shall be operable with one hand and shall not require tight grasping, pinching or twisting of the wrist. The force required to activate controls shall be no greater than 5 pound-force (22.2N). Lever operated, push-type and electronically controlled mechanisms are examples of acceptable designs.*

6. ***Shower Enclosures.*** *Doors and panels of shower enclosures shall be substantially constructed from approved, shatter-resistant materials. Hinged shower doors shall open outward. Glazing used in doors and panels of shower enclosures shall be fully tempered, laminated safety glass or approved plastic. When glass is used, it shall have minimum thickness of not less than 1/8 inch (3.17 mm) when fully tempered, or 1/4 inch (6.35 mm) when laminated, and shall pass the test requirements of this Part,*

Chapter 24 Glass and Glazing. Plastics used in doors and panels of showers enclosures shall be of a shatter-resistant type.

1134A.7 Water Closets. *Water closets in bathrooms or powder rooms required to be accessible shall comply with this section.*

1. ***Floor Space.*** *The water closet shall be located in a space a minimum of 36 inches (914 mm) in clear width with 48 inches (1219 mm) minimum clear space provided in front of the water closet. This space may include maneuverable space under a lavatory, if provided and arranged so as not to impede access.*

Exception: *In covered multifamily dwelling units, the water closet may be located in a space 48 inches (1219 mm) in clear width with 36 inches (914 mm) of clear space provided in front of the water closet.*

Water closets shall be located within bathrooms in a manner that permits a grab bar to be installed on one side of the fixture. In locations where water closets are adjacent to walls or bathtubs, the centerline of the fixture shall be a minimum of 18 inches (457 mm) from the obstacle. The other (nongrab bar) side of the water closet shall be a minimum of 18 inches (457 mm) from the centerline of the fixture to the finished surface of adjoining walls, vanities or from the edge of a lavatory.

2. ***Reinforced Walls for Grab Bars.*** *Where the water closet is not placed adjacent to a side wall, the bathroom shall have provisions for installation of floor-mounted, foldaway or similar alternative grab bars.*

Where the water closet is placed adjacent to a side wall, reinforcement shall be installed on both sides or one side and the back. If reinforcement is installed at the back, it shall be installed between 32 inches (813 mm) and 38 inches (965 mm) above the floor. The grab bar reinforcement shall be a minimum of 6 inches (152.4 mm) nominal in height. The backing shall be a minimum of 40 inches (1016 mm) in length.

Reinforcement installed at the side of the water closet shall be installed 32 inches to 38 inches (813 mm to 965 mm) above the floor. The reinforcement shall be installed a maximum of 12 inches (305 mm) from the rear wall and shall extend a minimum of 26 inches (660 mm) in front of the water closet . The grab bar reinforcement shall be a minimum of 6 inches (152.4 mm) nominal in height.

3. ***Seat Height.*** *The minimum height of water closet seats shall be 15 inches (381 mm) above the floor.*

4. ***Water Closet Controls.*** *Water closet controls shall be mounted no more than 44 inches (1118 mm) above the floor. The force required to activate controls shall be no greater than 5 pound-force (22.2 N).*

1134A.8 Lavatories, Vanities, Mirrors and Towel Fixtures*. Bathrooms or powder rooms required to be accessible shall have at least one accessible lavatory. Where mirrors and towel fixtures are provided, at least one of each shall be accessible.*

1. ***Location.*** *Vanities and lavatories shall be installed with the centerline of the fixture a minimum of 18 inches (457 mm) horizontally from an adjoining wall or fixture to allow for forward approach. When parallel approach is provided, lavatories shall be installed with the centerline of the fixture a minimum of 24 inches (610 mm) horizontally from an adjoining wall or fixture. The top of the fixture rim shall be a maximum of 34 inches (864 mm) above the finished floor.*

2. ***Floor Space.*** *A clear maneuvering space at least 30 inches by 48 inches (762mm by 1219mm) shall be provided at lavatories and shall be centered on the lavatory.*

3. ***Cabinets.*** *Cabinets under lavatories are acceptable provided the bathroom has space to allow a parallel approach by a person in a wheelchair and the lavatory cabinets are designed with adaptable knee and toe space.*

4. ***Knee and Toe Space.*** *Knee and toe space shall be provided as follows:*

4.1. The knee space shall be at least 30 inches (762 mm) wide and 8 inches deep (203.2 mm).

4.2. The knee space shall be at least 29 inches (737 mm) high at the front face and reducing to not less than 27 inches (686 mm) at a point 8 inches (203.2 mm) back from the front edge.

4.3. The knee and toe space required in this section shall be provided by one of the following:

4.3.1. The space beneath the lavatory shall be left clear and unobstructed.

4.3.2. Any cabinet beneath the lavatory shall be removable without the use of specialized knowledge or specialized tools or,

4.3.3. Doors to the cabinet beneath the lavatory shall be removable or openable to provide the required unobstructed knee and toe space.

4.4. The toe space required in this section shall be provided as follows:

4.4.1. Shall be at least 30 inches (762 mm) wide and centered on the lavatory.

4.4.2. Shall be at least 17 inches (432 mm) deep, measured from the front edge.

4.4.3. Shall be at least 9 inches (228.6 mm) high from the floor.

5. ***Finished Floor*** *The finished floor beneath the lavatory shall be extended to the wall.*

6. ***Plumbing Protection.*** *Hot water and drain pipes exposed under lavatories shall be insulated or otherwise covered. There shall be no sharp or abrasive surfaces under lavatories.*

7. ***Lavatory Faucet Controls.*** *Faucet controls and operation mechanisms shall be operable with one hand and shall not require tight grasping, pinching or twisting of the wrist.*

The force required to activate controls shall be no greater than 5 pound-force (22.2N). Lever operated, push-type and electronically controlled mechanisms are examples of acceptable designs. Self-closing valves are allowed if the faucet remains open for at least 10 seconds.

8. ***Mirrors and Towel Fixtures.*** *Where mirrors or towel fixtures are provided they shall be mounted with the bottom edge no higher than 40 inches (1016 mm) from the floor.*

SECTION 1135A LAUNDRY ROOMS

1135A.1 General. *If clothes washing machines and clothes dryers are provided in covered multifamily dwelling units, one of each type of appliance shall be provided. Where front-loading clothes washers are not provided, management shall provide assistive devices, on request of the occupant, to permit the use of top-loading clothes washers.*

SECTION 1136A ELECTRICAL RECEPTACLE, SWITCH and CONTROL HEIGHTS

1136A.1 Receptacle Heights. *Electrical receptacle outlets on branch circuits of 30 amperes or less and communication system receptacles shall be located no more than 48 inches (1219 mm) measured from the top of the receptacle outlet box or receptacle housing nor less than 15 inches (381 mm) measured from the bottom of the receptacle outlet box or receptacle housing to the level of the finished floor or working platform. If the reach is over an obstruction (for example, a kitchen base cabinet) between 20 and 25 inches in depth, the maximum height measured at the box is reduced to 44 inches for forward approach, or 46 inches for side approach, provided the obstruction is no more than 24 inches in depth. Obstructions shall not extend more than 25 inches from the wall beneath the receptacle.*

Outlets that do not satisfy these specifications are acceptable provided that comparable outlets, that perform the same functions, are provided within the same area and are accessible.

Exceptions:

1. Receptacle outlets installed as part of permanently installed baseboard heaters are exempt.

2. Required receptacle outlets shall be permitted in floors when adjacent to sliding panels or walls.

3. Baseboard electrical outlets used in relocatable partitions, window walls or other electrical convenience floor outlets are not subject to the minimum height requirements.

4. This section shall not apply to existing buildings when the enforcing agency determines that compliance with these standards would create an unreasonable hardship.

Note: *The intent of the measurement is to insure that receptacles fall within the reach range of 15" to 48".*

1136A.2 Switch and Control Heights. *Controls or switches intended to be used by the occupant of the room or area to control lighting and receptacle outlets, appliances, alarms, or cooling, heating and ventilating equipment, shall be located no more than 48 inches (1219 mm) measured from the top of the outlet box nor less than 15 inches (381 mm) measured from the bottom of the outlet box to the level of the finished floor or working platform. If the reach is over a physical barrier an obstruction (for example, a kitchen base cabinet) between 20 and 25 inches (508 and 635 mm) in depth, the maximum height is reduced to 44 inches (1118 mm) for forward approach, or 46 inches (1168 mm) for side approach, provided the obstruction is no more than 24 inches (610 mm) in depth. Physical barriers or obstructions shall not extend more than 25 inches (635 mm) from the wall beneath a control.*

Controls that do not satisfy these specifications are acceptable provided that comparable controls or outlets, that perform the same functions, are provided within the same area and are accessible.

Exception: *Appliances (e.g. kitchen stoves, dishwashers, range hoods, microwave ovens and similar appliances) which ~~do not~~ have controls located on the appliance.*

Division V — FEATURES COMMON TO EXTERIOR AND INTERIOR OF BUILDINGS

Division V Table of Contents

Section 1137A Other Features and Facilities
Section 1138A Reserved
Section 1139A Drinking Fountains
Section 1140A Accessible Telephones
Section 1141A Swimming Pools
Section 1142A Electrical Receptacle, Switch and Control Heights
Section 1143A Signage
Sections 1144A through 1149 Reserved

SECTION — 1137A OTHER FEATURES AND FACILITIES

1137A.1 General. *This Division shall apply to features and facilities of common use areas on accessible floors or sites.*

Note: *The provisions in this Division are not applicable to dwelling units.*

SECTION 1138A RESERVED

SECTION 1139A ACCESSIBLE DRINKING FOUNTAINS

1139A.1 General. *Drinking fountains and water coolers in common-use areas and/or sites shall comply with this section. A side approach drinking fountain is not acceptable.*

1139A.2 Accessible Route. *Drinking fountains and water coolers shall be on an accessible route.*

1139A.3 Design and Construction. *Wall-mounted and post-mounted cantilevered drinking fountains and water coolers shall be designed and constructed to comply with the following: (See Figure 11A-11A)*

1. *A clear floor space shall be provided in conformance with the following:*

   1.1. A minimum clear floor space 30 inches by 48 inches (762 mm by 1219 mm) to allow a person in a wheelchair to approach the unit facing forward.

   1.2. A clear knee space a minimum of 30 inches (762 mm) in width.

   1.3. A clear knee space a minimum of 18 inches (457 mm) in depth.

   1.4. A clear and unobstructed knee space under the drinking fountain not less than 27 inches (686 mm) in height and 8 inches (203.2 mm) in depth, the depth measurements being taken from the front edge of the fountain.

   1.5. A toe clearance of 9 inches (228.6 mm) in height above the floor and 17 inches (432 mm) in depth from the front edge of the fountain.

2. *Water flow shall be provided in conformance with the following:*

   2.1. The spout shall be shall be located within 6 inches (152.4 mm) of the front edge of the drinking fountain and within 36 inches (914 mm) of the floor.

   2.2. A flow of water at least 4 inches (101.6 mm) high shall be available to allow the insertion of a cup or glass under the flow of water.

   2.3. The water stream from the bubbler shall be substantially parallel to the front edge of the drinking fountain.

   2.4. The force required to activate controls shall be no greater than 5 pound force (22.2 N).

   2.5. Manually operated or electronically operated controls shall be located within 6 inches (152.4 mm) of the front edge of the fountain.

1139A.3.1 Location. *Water fountains shall be located completely within alcoves or otherwise positioned so as not to encroach into pedestrian ways. The alcove in which the water fountain is located shall not be less than 32 inches (813 mm) in width and 18 inches (457 mm) in depth. Protruding objects located in alcoves or otherwise positioned so as to limit encroachment into pedestrian ways are permitted to project 4 inches into walks, halls corridors, passageways or aisles. (See Figure 11A-11A).*

Exception: *When the enforcing agency determines that it would create an unreasonable hardship to locate the water fountain in an alcove, the water fountain may project into the path of travel, and the path of travel shall be identifiable to the blind as follows:*

1. The surface of the path of travel at the water fountain shall be textured so that it is clearly identifiable by a blind person using a cane. The minimum textured area shall extend from the wall supporting the water fountain to 1 foot (305 mm) beyond the front edge of the water fountain and shall extend 1 foot (305mm) beyond each side of the water fountain, or

2. Wing walls shall be provided on each side of the water fountain. The wing walls shall project out from the supporting wall at least as far as the water fountain to within 6 inches (152.4 mm) of the surface of the path of travel. There shall also be a minimum of 32 inches (813 mm) clear between the wing walls.

SECTION 1140A. ACCESSIBLE TELEPHONES

1140A.1 General. *If public telephones are provided, they shall comply with this section. On floors where public telephones are provided, at least one telephone shall be accessible. On any floor where two or more banks of multiple telephones are provided, at least one telephone in each bank shall be accessible.*

1140A.2 Clear Floor or Ground Space. *A clear floor or ground space at least 30 inches by 48 inches (762 mm by 1219 mm) that allows either a forward or parallel approach by a person using a wheelchair shall be provided at telephones. Bases, enclosures and fixed seats shall not impede approaches to telephones by people who use wheelchairs. (See Figure 11A-11B).*

The minimum clear floor or ground space for wheelchairs may be positioned for forward or parallel approach to an object. Clear floor or ground space for wheelchairs may be part of the knee space required under some objects.

1140A.3 Relationship of Maneuvering Clearances to Wheelchair Spaces. *One full unobstructed side of the clear floor or ground space for a wheelchair shall adjoin another wheelchair clear floor space. If a clear floor space is located in an alcove or otherwise confined on all or part of three sides, additional maneuvering clearances shall be provided.*

1140A.4 Mounting Height. *The highest operable part of the telephone shall be within the reach ranges specified in the Figure 11A-11B. Telephones mounted diagonally in a corner that require wheelchair users to reach diagonally shall have the highest operable part no higher than 54 inches (1372 mm) above the floor. (See Figure 11A-11B).*

1140A.5 Enclosures. *If telephone enclosures are provided, they may overhang the clear floor space required in Sections 1140A.2 and 1140A.3 with the following limits:*

1. ***Side Reach Possible.*** *The overhang shall be no greater than 19 inches (483 mm). The height of the lowest overhanging part shall be equal to or greater than 27 inches (686 mm) above the floor.*

2. ***Full-height Enclosures.*** *Entrances to full-height enclosures shall be a minimum of 30 inches (762 mm) in width.*

3. ***Forward Reach Required.*** *If the overhang is greater than 12 inches (305 mm), then the clear width of the enclosure shall be 30 inches (762 mm) minimum; if the clear width of the enclosure is less than 30 inches (762 mm), then the height of the lowest overhanging part shall be equal to or greater than 27 inches (686 mm).*

1140A.6 Equipment for Hearing Impaired People*. Telephones shall be equipped with a receiver that generates a magnetic field in the area of the receiver cap. A reasonable number of the public telephones provided, but always at least one on each floor or in each bank, whichever is more, in a building or facility, shall be equipped with a volume control. Such telephones shall be capable of a minimum of 12 dbA and a maximum of 18 dbA above normal. If an automatic reset is provided, 18 dbA may be exceeded. Public telephones with volume control shall be hearing aid compatible and shall be identified by a sign containing a depiction of a telephone handset with radiating sound waves. (See Figure 11A-11D).*

1140A.7 Text Telephones. *If a total of four or more public pay telephones are provided at the interior and exterior of a site, and if at least one of the total number provided is located in an interior location, at least one interior public text telephone shall be provided.*

1140A.7.1 Signage. *Text telephones shall be identified by the International TTY symbol (see Figure 11A-11C). If a facility has a public text telephone, directional signage indicating the location of the nearest such telephone shall be placed adjacent to all banks of telephones that do not contain a text telephone. Such directional signage shall include the International TTY symbol. If a facility has no banks of telephones, the directional signage shall be provided at the entrance or in a building directory.*

1140A.8 Controls. *Telephones shall have push-button controls where service for such equipment is available.*

1140A.9 Cord Length. *The cord from the telephone to the handset shall be at least 29 inches (737 mm) long.*

1140A.10 Telephone Books. *If telephone books are provided, they shall be located in a position that complies with the reach ranges in Figures 11A-1I, and 11A-1J.*

SECTION 1141A ACCESSIBLE SWIMMING POOLS

1141A.1 General. *Swimming pools in common-use areas shall comply with the provisions of this section and Chapter 31B.*

1141A.2 Swimming Pool Deck Areas. *Swimming pool deck areas must be accessible, and a mechanism to assist persons with disabilities gain entry into the pool and exit from the pool shall be provided. Such a mechanism may consist of a swimming pool lift device as long as the device meets all of the following criteria:*

1. *Has a seat that meets all of the following:*

   1.1. The seat must be rigid;

   1.2. The seat must be not less than 17 inches (432 mm) and not more than 19 inches (483 mm), inclusive of any cushioned surface that might be provided, above the pool deck;

   1.3. The seat must have two armrests. The armrest on the side of the seat by which access is gained shall be either removable or fold clear of the seat;

   1.4. The seat must have a back support that is at least 12 inches (305 mm) tall;

   1.5. The seat must have an occupant restraint for use by the occupant of the seat and the restraint must meet the standards for operable controls in compliance with Section 1127A.9.6.4.

2. *Be capable of unassisted operation from both the deck and water levels.*

3. *Be stable and not permit unintended movement when a person is getting into or out of the seat*

4. *Be designed to have a live-load capacity of not less than 300 pounds.*

5. *Be positioned so that, if the pool has water of different depths, it will place the operator into water that is at least three feet (914 mm) deep.*

6. *Be capable of lowering the operator at least 18 inches (457 mm) below the surface of the water.*

SECTION 1142A ELECTRICAL RECEPTACLE, SWITCH and CONTROL HEIGHTS

1142A.1 Receptacle Heights. *Electrical receptacle outlets on branch circuits of 30 amperes or less and communication system receptacles shall be located no more than 48 inches (1219 mm) measured from the top of the receptacle outlet box or receptacle housing nor less than 15 inches (381 mm) measured from the bottom of the receptacle outlet box or receptacle housing to the level of the finished floor or working platform. If the reach is over an obstruction (for example, a kitchen base cabinet) between 20 and 25 inches in depth, the maximum height measured at the box is reduced to 44 inches for forward approach, or 46 inches for side approach, provided the obstruction is no more than 24 inches in depth. Obstructions shall not extend more than 25 inches from the wall beneath the receptacle.*

Outlets that do not satisfy these specifications are acceptable provided that comparable outlets, that perform the same functions, are provided within the same area and are accessible.

Exceptions:

1. Receptacle outlets installed as part of permanently installed baseboard heaters are exempt.

2. Required receptacle outlets shall be permitted in floors when adjacent to sliding panels or walls.

3. Baseboard electrical outlets used in relocatable partitions, window walls or other electrical convenience floor outlets are not subject to the minimum height requirements.

4. This section shall not apply to existing buildings when the enforcing agency determines that compliance with these standards would create an unreasonable hardship.

Note: *The intent of the measurement is to insure that receptacles fall within the reach range of 15" to 48".*

1142A.2 Switch and Control Heights. *Controls or switches intended to be used by the occupant of the room or area to control lighting and receptacle outlets, appliances, alarms, or cooling, heating and ventilating equipment, shall be located no more than 48 inches (1219 mm) measured from the top of the outlet box nor less than 15 inches (381 mm) measured from the bottom of the outlet box to the level of the finished floor or working platform. If the reach is over a physical barrier an obstruction (for example, a kitchen base cabinet) between 20 and 25 inches (508 and 635 mm) in depth, the maximum height is reduced to 44 inches (1118 mm) for forward approach, or 46 inches (1168 mm) for side approach, provided the obstruction is no more than 24 inches (610 mm) in depth. Physical barriers or obstructions shall not extend more than 25 inches (635 mm) from the wall beneath a control.*

Controls that do not satisfy these specifications are acceptable provided that comparable controls or outlets, that perform the same functions, are provided within the same area and are accessible.

SECTION 1143A SIGNAGE

1143A.1. General. *When signs and/or identification devices are provided they shall comply with this section.*

Exception: *Signs need not be provided within dwelling unit units.*

1143A.2. Identification Signs. *When signs identify permanent rooms and spaces of a building or site, they shall comply with 1143A.5, 1143A.6, 1143A.8, 1143A.9 and 1143A.10.*

Note: *See Section 1124A for additional signage requirements applicable to elevators and Section 1127A.7 for sanitary facilities.*

1143A.3. Directional and Informational Signs. *When signs direct to or give information about permanent rooms and spaces of a building or site, they shall comply with 1143A.5, 1143A.6 and 1143A.7.*

1143A.4. Accessibility Signs. *When signs identify, direct or give information about accessible elements and features of a building or site, they shall include the appropriate symbol of accessibility and shall comply with 1143A.5 and, when applicable, 1143A.10.*

1143A.5 Finish and Contrast. *Characters, symbols and their background shall have a non-glare finish. Characters and symbols shall contrast with their background, either light on a dark background or dark on a light background.*

1143A.6 Proportions. *Characters on signs shall have a width-to-height ratio of between 3:5 and 1:1 and a stroke width to height ratio of between 1:5 and 1:10.*

1143A.7 Character Height. *Characters and numbers on signs shall be sized according to the viewing distance from which they are to be read. The minimum height is measured using an uppercase X. Lowercase characters are permitted. For signs suspended or projected above the finish floor greater than 80 inches (2032 mm), the minimum character height shall be 3 inches (76 mm).*

1143A.8 Raised Characters and Pictorial Symbol Signs. *When raised characters are required or when pictorial symbols (pictograms) are used on such signs, they shall conform to the following requirements:*

1. ***Character Type.*** *Characters on signs shall be raised 1/32-inch (0.794 mm) minimum and shall be sans serif uppercase characters accompanied by Grade 2 Braille complying with 1143A.9.*

2. ***Character Size.*** *Raised characters shall be a minimum of 5/8 inch (15.9 mm) and a maximum of 2 inches (51 mm) high.*

3. ***Pictorial Symbol Signs (Pictograms).*** *Pictorial symbol signs (pictograms) shall be accompanied by the verbal description placed directly below the pictogram. The outside dimension of the pictogram field shall be a minimum of 6 inches (152 mm) in height.*

4. ***Character Placement.*** *Characters and Braille shall be in a horizontal format. Braille shall be placed a minimum of 3/8 inch and a maximum of ½ inch directly below the tactile characters; flush left or centered. When tactile text is multi-lined, all Braille shall be placed together below all lines of tactile text.*

1143A.9 Braille. *Contracted Grade 2 Braille shall be used wherever Braille is required in other portions of these standards. Dots shall be 1/10 inch (2.54 mm) on centers in each cell with 2/10-inch (5.08 mm) space between cells, measured from the second column of dots in the first cell to the first column of dots in the second cell. Dots shall be raised a minimum of 1/40 inch (0.635 mm) above the background. Braille dots shall be domed or rounded.*

1143A.10 Mounting Location and Height. *Where permanent identification signs are provided for rooms and spaces, signs shall be installed on the wall adjacent to the latch side of the door. Where there is no wall space on the latch side, including at double leaf doors, signs shall be placed on the nearest adjacent wall, preferably on the right.*

Where permanent identification signage are provided for rooms and spaces they shall be located on the approach side of the door as one enters the room or space. Signs that identify exits shall be located on the same side of the door as the visual exit sign.

Mounting height shall be 60 inches (1524 mm) above the finish floor to the centerline of the sign. Mounting location shall be determined so that a person may approach within 3 inches (76 mm) of signage without encountering protruding objects or standing within the swing of a door.

Note: *See also Section 1127A.7 for additional signage requirements applicable to sanitary facilities.*

SECTION 1144A RESERVED
SECTION 1145A RESERVED
SECTION 1146A RESERVED
SECTION 1147A RESERVED
SECTION 1148A RESERVED
SECTION 1149A RESERVED

Division VI — SITE IMPRACTICALITY TESTS

Division VI Table of Contents

Section 1150A Site Impracticality Tests
Test No. 1-Individual Building Test
Test No. 2-Site Analysis Test
Test No. 3-Unusual Characteristics Test

SECTION 1150A SITE IMPRACTICALITY TESTS

1150A.1 General. *Covered multifamily dwellings in buildings without an elevator, located on sites with difficult terrain conditions or unusual characteristics, may employ the site impracticality tests in this Division for determining the accessibility and adaptability provisions required by this Chapter.*

Except as provided for in Section 1102A.2, the provisions of this section do not apply to multiple-story dwelling units in nonelevator buildings, i.e., townhouses.

SINGLE BUILDING WITH ONE COMMON (LOBBY) ENTRANCE

The following may only be used for determining required access to covered multifamily dwelling units, in a single building with one common (lobby) entrance, located on a site with difficult terrain conditions or unusual characteristics:

All ground floor units in nonelevator buildings shall be adaptable and on an accessible route unless an accessible route to the common (lobby) entrance is not required as determined by Test No. 1, Individual Building Test, or Test No. 3, Unusual Characteristics Test, as described in this section.

Sites where either Test No. 1 or Test No. 3 is used and it is determined that an accessible route to the common (lobby) entrance is not required, at least twenty percent of the ground floor dwelling units shall comply with Division IV, and all remaining ground floor dwelling units shall comply with the features listed in Section 1150A.2 unless exempted by Test No. 3, Unusual Characteristics Test.

Test No. 1- Individual Building Test may only be used if the site has terrain over fifteen percent slope.

Test No. 3 - Unusual Characteristics Test may be used if applicable.

Provisions to Test Nos. 1 and 2. *Where a building elevator is provided only as means of creating an accessible route to covered multifamily dwelling units on a ground floor, the building is not considered to be an elevator building for purposes of this code; hence, only the ground floor dwelling units would be covered.*

TEST NO. 1-INDIVIDUAL BUILDING TEST

It is not required by this code to provide an accessible route when the terrain of the site is such that both of the following apply:

*1. The slopes of the undisturbed site measured between the planned entrance and all vehicular or pedestrian arrival points within 50 feet (15240 mm) of the planned entrance exceed 15 percent**;** and*

2. The slopes of the planned finished grade measured between the entrance and all vehicular or pedestrian arrival points within 50 feet (15240 mm) of the planned entrance also exceed 15 percent.

If there are no vehicular or pedestrian arrival points within 50 feet (15240 mm) of the planned entrance, the slope for the purposes of Test No. 1 will be measured to the closest vehicular or pedestrian arrival point.

For purposes of these requirements, vehicular or pedestrian arrival points include public or resident parking areas, public transportation stops, passenger loading zones, and public streets or sidewalks. To determine site impracticality, the slope would be measured at ground level from the point of the planned entrance on a straight line to (i) each vehicular or pedestrian arrival point that is within 50 feet (15240 mm) of the planned entrance, or (ii) if there are no vehicular or pedestrian arrival points within the specified area, the vehicular or pedestrian arrival point closest to the planned entrance. In the case of sidewalks, the closest point to the entrance will be where a public sidewalk entering the site intersects with the walk to the entrance. In the case of resident parking areas, the closest point to the planned entrance will be measured from the entry point to the parking area that is located closest to the planned entrance.

TEST NO. 2-SITE ANALYSIS TEST

For a site having multiple buildings, or a site with a single building with multiple entrances, it is not required to provide an accessible route to all ground floor units under the following conditions:

1. Calculate the percentage of the total buildable area of the undisturbed site with a natural grade less than 10 percent slope. The analysis of the existing slope (before grading) shall be done on a topographic survey with 2 foot (610 mm) contour intervals with slope determination made between each successive interval. The accuracy of the slope analysis shall be certified by a licensed engineer, landscape architect, architect or surveyor.

2. Determine the requirement of providing an accessible route to planned multifamily dwellings based on the topography of the existing natural terrain. The minimum percentage of ground floor units required on an accessible route shall equal the percentage of the total buildable area (not restricted-use areas) of the undisturbed site with an existing natural grade of less than 10 percent slope. In no case shall less than twenty percent of the ground floor dwelling units be on an accessible route and comply with the provisions of Division IV.

3. In addition to the percentage established in paragraph (2), all additional ground floor units in a building, or ground floor units served by a particular entrance, that fall within an 8.33 percent slope between their planned entrances and an arrival point, shall be on an accessible route and comply with the provisions of Division IV.

4. All additional ground floor units in a building, or ground floor units served by a particular entrance, not on an accessible route shall comply with the features listed in Section 1150A.2.

TEST NO. 3-UNUSUAL CHARACTERISTICS TEST

Unusual characteristics include sites located in a federally designated floodplain or coastal high-hazard area and sites subject to other similar requirements of law or code that require the lowest floor or the lowest structural member of the lowest floor be designed to a specified level at or above the base flood elevation. An accessible route to a building entrance is impractical due to unusual characteristics of the site when:

1. The original site characteristics result in a difference in finished grade elevation exceeding 30 inches (762 mm) and 10 percent measured between an entrance and all vehicular or pedestrian arrival points within 50 feet (15240 mm) of the planned entrance; or

2. If there are no vehicular or pedestrian arrival points within 50 feet (15240 mm) of the planned entrance, the unusual characteristics result in a difference in finished grade elevation exceeding 30 inches (762 mm) and 10 percent measured between an entrance and the closest vehicular or pedestrian arrival point.

1150A.2 Additional Requirements for Section 1150A.

All other ground floor dwelling units in nonelevator buildings shall be made to comply with the following requirements:

1. Grab bar reinforcement: see Section 1134A.

2. 32 inch (813 mm) clear door interior opening width: see Section 1132A.3.

3. Lever hardware: see Section 1132A.8.

4. Door signal devices: see Section 1132A.10.

5. Clear space by doors: (Chapters 10 and 11A).

6. Minimum 15-inch (381 mm) water closet seat height: see Section 1134A.7 Item 3.

7. Electrical receptacle outlet height: see Section 1136A.

8. Lighting and environmental control height: see Section 1136A.

9. Faucet controls: see Section 1134A.8 Item 7.

10. Water closet, bathtub and lavatory minimum space requirements: see Section 1134A.

11. Removable cabinets under the kitchen sink counter area: see Section 1133A.3.

Division VII — FIGURES
(Figures 11A–1A through 11A–11E)

NOTE:
Authority cited: Health and Safety Code Sections 17040, 17921, 17922, 18300, 18865 and 19990; and Government Code Sections 12955.1 and 12955.1.1.
Reference: Health and Safety Code Sections 17000 through 17060, 17910 through 17990, 18620, 18630, 18640, 18670, 18690, 18691, 18873 through 18873.5 and 19960 through 19997; and Government Code Sections 12955.1 and 12955.1.1.

CHAPTER 12
INTERIOR ENVIRONMENT

(Note: Adopt entire chapter with amendments.)

1203.1 General. Buildings shall be provided with natural ventilation in accordance with Section 1203.4, or mechanical ventilation in accordance with the ~~*International*~~ *California Mechanical Code*.

1203.2.1 Openings into attic. Exterior openings into the attic space of any building intended for human occupancy shall be covered with corrosion-resistant wire cloth screening, hardware cloth, perforated vinyl or similar material that will prevent the entry of birds, squirrels, rodents, snakes and other similar creatures. The openings therein shall be a minimum of $^{1}/_{8}$ inch (3.2 mm) and shall not exceed $^{1}/_{4}$ inch (6.4 mm). Where combustion air is obtained from an attic area, it shall be in accordance with Chapter 7 of the ~~*International*~~ *California Mechanical Code*.

1203.3.2 Exceptions. The following are exceptions to Sections 1203.3 and 1203.3.1:

1. Where warranted by climatic conditions, ventilation openings to the outdoors are not required if ventilation openings to the interior are provided.

2. The total area of ventilation openings is permitted to be reduced to $^{1}/_{1,500}$ of the under-floor area where the ground surface is treated with an approved vapor retarder material and the required openings are placed so as to provide cross ventilation of the space. The installation of operable louvers shall not be prohibited.

3. Ventilation openings are not required where continuously operated mechanical ventilation is provided at a rate of 1.0 cubic foot per minute (cfm) for each 50 square feet (1.02 L/s for each 10 m^2) of crawl-space floor area and the ground surface is covered with an approved vapor retarder.

4. Ventilation openings are not required when the ground surface is covered with an approved vapor retarder, the perimeter walls are insulated and the space is conditioned in accordance with the ~~*International*~~ *California Energy* ~~*Conservation*~~ *Code*.

5. For buildings in flood hazard areas as established in Section 1612.3, the openings for under-floor ventilation shall be deemed as meeting the flood opening requirements of ASCE 24 provided that the ventilation openings are designed and installed in accordance with ASCE 24.

1203.4 Natural ventilation. Natural ventilation of an occupied space shall be through windows, doors, louvers or other openings to the outdoors. The operating mechanism for such openings shall be provided with ready access so that the openings are readily controllable by the building occupants.

~~1203.1.1 [For HCD 1] Window screening.~~ ***[HCD 1]*** *In employee housing, all openable windows in rooms used for living, dining, cooking or sleeping purposes, and toilet and bath buildings, shall be provided and maintained with insect screening.*

~~1203.1.2 [For HCD 1] Door screening.~~ ***[HCD 1]****Door openings of rooms used for dining, cooking, toilet and bathing facilities in employee housing shall be provided and maintained with insect screening or with solid doors equipped with self-closing devices in lieu thereof, when approved by the enforcement agency.*

(Section 1203.1, Exception 3, 2001 CBC) ~~For applications listed in Section 108.2.1.1 regulated by the Department of Housing and Community Development, 3.~~ ***[HCD 1]*** *The windows, doors, louvers or other approved closeable openings not required by Section ~~310.4~~ 1026 may open into a passive solar energy collector for ~~light and~~ ventilation required by this section. ~~When this occurs t~~ The area of ~~required percentages of natural light and~~ ventilation openings to the outside in the passive solar energy collector shall ~~increase~~ be increased to compensate for ~~covered~~ the openings required by the interior space.*

1203.4.2 Contaminants exhausted. Contaminant sources in naturally ventilated spaces shall be removed in accordance with the ~~*International*~~ *California Mechanical Code* and the *International Fire Code.*

1203.4.2.1 Bathrooms. Rooms containing bathtubs, showers, spas and similar bathing fixtures shall be mechanically ventilated in accordance with the ~~*International*~~ *California Mechanical Code*.

1203.5 Other ventilation and exhaust systems. Ventilation and exhaust systems for occupancies and operations involving flammable or combustible hazards or other contaminant sources as covered in the ~~*International*~~ *California Mechanical Code* or the *International Fire Code* shall be provided as required by both codes.

1204.1 Equipment and systems.
Interior spaces intended for human occupancy shall be provided with active or passive space-heating systems capable of maintaining a minimum indoor temperature of 68°F (20°C) at a point 3 feet (914 mm) above the floor on the design heating day.

Exceptions:

1. Interior spaces where the primary purpose is not associated with human comfort.

*(Section 310.11 Exception, 2001 CBC)~~**EXCEPTION [For HCD 1]:**~~ 2.* ***[HCD 1]*** *For limited-density owner-built rural dwellings, a heating facility or appliance shall be installed in each dwelling subject to the provisions of Subchapter 1, Chapter 1, Title 25, California Code of Regulations~~;~~, commencing with Section 74; however, there shall be no specified requirement for heating capacity or temperature maintenance. The use of solid-fuel or solar-heating devices shall be deemed as complying with the requirements of this section. If nonrenewable fuel is used in these dwellings, rooms so heated shall meet current installation standards.*

~~1203.2.1 [For HCD 1] Passive solar energy collectors.~~ ***~~Note:~~*** *~~For applications listed in Section 108.2.1.2 regulated by the Department of Housing and Community Development.~~* *3.* ***[HCD 1]*** *When a passive solar energy collector is designed as a conditioned area it shall comply with the California Energy Code, Title 24, Part 6~~, commencing with Section 10-101~~. Non-conditioned passive solar energy collectors are exempt from Title 24, Part 6.*

1205.1 General. Every space intended for human occupancy shall be provided with natural light by means of exterior glazed openings in accordance with Section 1205.2 or shall be provided with artificial light in accordance with Section 1205.3. Exterior glazed openings shall open directly onto a public way or onto a yard or court in accordance with Section 1206.

~~For applications listed in Section 108.2.1.1 regulated by the Department of Housing and Community Development.~~ ***~~1203.2.2~~*** ***[HCD 1]*** *Glazed openings ~~covered by a passive solar energy collector shall comply with Section 1203.1, Exception 3~~ may open into a passive solar energy collector provided the area of exterior glazed openings in the passive solar energy collector is increased to compensate for the area required by the interior space.*

1206.3.3 Court drainage. The bottom of every court shall be properly graded and drained to a public sewer or other approved disposal system complying with the ~~*International*~~ *California Plumbing Code*.

SECTION 1207
SOUND TRANSMISSION

~~**1207.1 Scope.** This Section shall apply to common interior walls, partitions and floor/ceiling assemblies between adjacent dwelling units or between dwelling units and adjacent public areas such as halls, corridors, stairs or service areas.~~

~~**1207.2 Air-borne sound.** Walls, partitions and floor/ceiling assemblies separating dwelling units from each other or from public or service areas shall have a sound transmission class (STC) of not less than 50 (45 if field tested) for air-borne noise when tested in accordance with ASTM E 90. Penetrations or openings in construction assemblies for piping; electrical devices; recessed cabinets; bathtubs; soffits; or heating, ventilating or exhaust ducts shall be sealed, lined, insulated or otherwise treated to maintain the required ratings. This requirement shall not apply to dwelling unit entrance doors; however, such doors shall be tight fitting to the frame and sill.~~

~~**1207.3 Structure-borne sound.** Floor/ceiling assemblies between dwelling units or between a dwelling unit and a public or service area within the structure shall have an impact insulation class (IIC) rating of not less than 50 (45 if field tested) when tested in accordance with ASTM E 492.~~

*(Appendix Section 1208.A, 2001 CBC)~~**SECTION 1208A – SOUND TRANSMISSION CONTROL**~~*

~~***1208A.1 [For HCD 1] General.***~~

~~***1208A.1.1***~~ ***1207.1*** ~~***[For HCD 1]***~~ ***Purpose and scope. [HCD 1]*** *The purpose of this section is to establish uniform minimum noise insulation performance standards to protect persons within ~~new~~ hotels, motels, dormitories, apartment houses and dwellings other than detached single-family dwellings from the effects of excessive noise, including, but not limited to, hearing loss or impairment and interference with speech and sleep. This section shall apply to all buildings for which applications for building permits were made subsequent to August 22, 1974.*

~~***1208A.1.2***~~ ***1207.2 Definitions. [HCD 1]*** *The following special definitions shall apply to this section:*

SOUND TRANSMISSION CLASS (STC) *is a single-number rating used to compare walls, floor-ceiling assemblies and doors for their sound-insulating properties with respect to speech and small household appliance noise. The STC is derived from laboratory measurements of sound transmission loss across a series of 16 test bands.*

Laboratory STC ratings should be used to the greatest extent possible in determining that the design complies with this section.

FIELD SOUND TRANSMISSION CLASS (FSTC) *is a single-number rating similar to STC, except that the transmission loss values used to derive the FSTC are measured in the field. All sound transmitted from the source room to the receiving room is assumed to be through the separating wall or floor-ceiling assembly.*

This section does not require determination of the FSTC, and field-measured values of noise reduction should not be reported as transmission loss.

IMPACT INSULATION CLASS (IIC) *is a single-number rating used to compare the effectiveness of floor-ceiling assemblies in providing reduction of impact-generated sounds such as footsteps. The IIC is derived from laboratory measurements of impact sound pressure level across a series of 16 test bands using a standardized tapping machine. Laboratory IIC ratings should be used to the greatest extent possible in determining that the design complies with this section.*

FIELD IMPACT INSULATION CLASS (FIIC) *is a single-number rating similar to the IIC, except that the impact sound pressure levels are measured in the field.*

NOISE ISOLATION CLASS (NIC) *is a single-number rating derived from measured values of noise reduction between two enclosed spaces that are connected by one or more paths. The NIC is not adjusted or normalized to a standard reverberation time.*

NORMALIZED NOISE ISOLATION CLASS (NNIC) *is a single-number rating similar to the NIC, except that the measured noise reduction values are normalized to a reverberation time of one-half second.*

NORMALIZED A-WEIGHTED SOUND LEVEL DIFFERENCE (Dn) *means, for a specified source room sound spectrum, Dn is the difference, in decibels, between the average sound levels produced in two rooms after adjustment to the expected acoustical conditions when the receiving room under test is normally furnished.*

DAY-NIGHT AVERAGE SOUND LEVEL (Ldn) *is the A-weighted equivalent continuous sound exposure level for a 24-hour period with a 10 db adjustment added to sound levels occurring during nighttime hours (10 p.m. to 7 a.m.).*

COMMUNITY NOISE EQUIVALENT LEVEL (CNEL) *is a metric similar to the Ldn, except that a 5 db adjustment is added to the equivalent continuous sound exposure level for evening hours (7 p.m. to 10 p.m.) in addition to the 10 db nighttime adjustment used in the Ldn.*

~~1208A.1.3~~ 1207.3 Relevant standards. [HCD 1] *The current edition of the following standards is generally applicable for determining compliance with this section. Copies may be obtained from the American Society for Testing and Materials (ASTM) at ~~1916 Race Street, Philadelphia, Pennsylvania 19103~~ 100 Barr Harbor Drive, West Conshohocken, PA, 19428-2959.*

ASTM C 634, Standard Definitions of Terms Relating to Environmental Acoustics.

ASTM E 90, Standard Method for Laboratory Measurement of Airborne Sound Transmission Loss of Building Partitions.

ASTM E 336, Standard Test Method for Measurement of Airborne Sound Insulation in Buildings.

ASTM E 413, Standard Classification for Determination of Sound Transmission Class.

ASTM E 492, Standard Method of Laboratory Measurement of Impact Sound Transmission Through Floor-Ceiling Assemblies Using the Tapping Machine.

ASTM E 497, Standard Recommended Practice for Installation of Fixed Partitions of Light Frame Type for the Purpose of Conserving Their Sound Insulation Efficiency.

ASTM E 597, Recommended Practice for Determining ~~A~~ a Single-Number Rating of Airborne Sound Isolation in Multi-unit Building Specifications.

ASTM E 966, Standard Guide for Field Measurement of Airborne Sound Insulation of Building Facades and Facade Elements.

ASTM E 989, Standard Classification for Determination of Impact Insulation Class (IIC).

ASTM E 1007, Standard Test Method for Field Measurement of Tapping Machine Impact Sound Transmission Through Floor-Ceiling Assemblies and Associated Support Structures.

ASTM E 1014, Standard Guide for Measurement of Outdoor A-Weighted Sound Levels.

~~1208A.1.4~~ 1207.4 ~~[For HCD 1]~~ Complaints. [HCD 1] *Where a complaint as to noncompliance with this chapter requires a field test, the complainant shall post a bond or adequate funds in escrow for the cost of said testing. Such costs shall be chargeable to the complainant if the field tests show compliance with this chapter. If the tests show noncompliance, testing costs shall be borne by the owner or builder.*

~~1208A.1.5~~ 1207.5 Local modification. [HCD 1] *The governing body of any city or county or city and county may, by ordinance, adopt changes or modifications to the requirements of this section as set forth in Section 17922.7 of the Health and Safety Code.*

~~1208A.1.6~~ 1207.6 Interdwelling sound transmission control. [HCD 1]

~~1208A.1.6.1~~ ***1207.6.1*** ***Wall and Floor-Ceiling Assemblies.*** *Wall and floor-ceiling assemblies separating dwelling units or guest rooms from each other and from public or service areas such as interior corridors, garages and mechanical spaces shall provide airborne sound insulation for walls, and both airborne and impact sound insulation for floor-ceiling assemblies.*

Exception: *Impact sound insulation is not required for floor-ceiling assemblies over nonhabitable rooms or spaces not designed to be occupied, such as garages, mechanical rooms or storage areas.*

~~1208A.2~~ ***1207.7*** ***Airborne Sound Insulation. [HCD 1]*** *All such acoustically rated separating wall and floor-ceiling assemblies shall provide airborne sound insulation equal to that required to meet a sound transmission class (STC) rating of 50 based on laboratory tests as defined in ASTM E 90 and E 413. Field-tested assemblies shall meet a noise isolation class (NIC) rating of 45 for occupied units and a normalized noise isolation class (NNIC) rating of 45 for unoccupied units as defined in ASTM Standards E 336 and E 413.*
ASTM E 597 may be used as a simplified procedure for field tests of the airborne sound isolation between rooms in unoccupied buildings. In such tests, the minimum value of Dn is 45 db for compliance.

Entrance doors from interior corridors together with their perimeter seals shall have STC ratings not less than 26. Such tested doors shall operate normally with commercially available seals.

Solid-core wood-slab doors 1 3/8 inches (35 mm) thick minimum or 18 gauge insulated steel-slab doors with compression seals all around, including the threshold, may be considered adequate without other substantiating information.

Field tests of corridor walls should not include segments with doors. If such tests are impractical, however, the NIC or NNIC rating for the composite wall-door assembly shall not be less than 30.

Penetrations or openings in construction assemblies for piping, electrical devices, recessed cabinets, bathtubs, soffits or heating, ventilating or exhaust ducts shall be sealed, lined, insulated or otherwise treated to maintain the required ratings.

~~1208A.3~~ ***1207.8*** ***Impact Sound Insulation. [HCD 1]*** *All acoustically rated separating floor-ceiling assemblies shall provide impact sound insulation equal to that required to meet an IIC rating of 50 based on laboratory tests as defined in ASTM E 492 and E 989. Field-tested assemblies shall meet a field impact insulation class (FIIC) rating of 45 for both occupied and unoccupied units as defined in ASTM E 1007 and E 989, with the exception that the measured impact sound pressure levels shall not be normalized to a standard amount of absorption in the receiving room.*

Floor coverings may be included in the assembly to obtain the required ratings. These coverings must be retained as a permanent part of the assembly and may be replaced only by other floor coverings that provide the required impact sound insulation.

~~1208A.4~~ ***1207.9*** ***Tested Assemblies. [HCD 1]***

~~1208A.4.1~~ *Laboratory-tested wall or floor-ceiling designs having STC or IIC ratings of 50 or more may be used by the building official to determine compliance with this section during the plan review phase. Field tests shall be required by the building official when evidence of sound leaks or flanking paths is noted, or when the separating assembly is not built according to the approved design.*

~~1208A.4.2~~ *Generic sound transmission control systems as listed in the Catalog of STC and IIC Ratings for Wall and Floor-Ceiling Assemblies, as published by the Office of Noise Control, California Department of Health Services, or the Fire Resistance Design Manual, as published by the Gypsum Association, may be used to evaluate construction assemblies for their sound transmission properties. Other tests from recognized laboratories may also be used. When ratings for essentially similar assemblies differ, and when ratings are below STC or IIC 50, field testing may be used to demonstrate that the building complies with this section.*

~~1208A.4.3~~ *For field testing, rooms should ideally be large and reverberant for reliable measurements to be made in all test bands. This is often not possible for bathrooms, kitchens, hallways or rooms with large amounts of sound-absorptive materials. Field test results should, however, report the measured values in all bands, noting those which do not meet relevant ASTM criteria for diffusion.*

~~**1208A4.4**~~ *It should be noted that STC ratings do not adequately characterize the sound insulation of construction assemblies when the intruding noise is predominantly low-pitched, as is often produced by amplified music or by large pieces of mechanical equipment.*

It should also be noted that the transmission of impact sound from a standardized tapping machine may vary considerably for a given design due to differences in specimen size, flanking transmission through associated structure and the acoustical response of the room below. Laboratory IIC values should therefore be used with caution when estimating the performance of hard-surfaced floors in the field. Additionally, IIC ratings may not always be adequate to characterize the subjectively annoying creak or boom generated by footfalls on a lumber floor.

~~**1208A.5**~~ **1207.10 Certification. [HCD 1]** *Field testing, when required, shall be done under the supervision of a person experienced in the field of acoustical testing and engineering ~~and~~, who shall forward test results to the building official showing that the sound isolation requirements stated above have been met. Documentation of field test results should generally follow the requirements outlined in relevant ASTM standards.*

~~**1208A.8**~~ **1207.11 Exterior Sound Transmission Control. [HCD 1]**

~~**1208A.8.1**~~ **1207.11.1 Application**. *Consistent with local land-use standards, residential structures located in noise critical areas, such as proximity to highways, county roads, city streets, railroads, rapid transit lines, airports or industrial areas, shall be designed to prevent the intrusion of exterior noises beyond prescribed levels. Proper design shall include, but shall not be limited to, orientation of the residential structure, setbacks, shielding and sound insulation of the building itself.*

~~**1208A.8.2**~~ **1207.11.2 Allowable Interior Noise Levels.** *Interior noise levels attributable to exterior sources shall not exceed 45 db in any habitable room. The noise metric shall be either the day-night average sound level (Ldn) or the community noise equivalent level (CNEL), consistent with the noise element of the local general plan.*

> ***Note:*** *Ldn is the preferred metric for implementing these standards. Worst-case noise levels, either existing or future, shall be used as the basis for determining compliance with this section. Future noise levels shall be predicted for a period of at least 10 years from the time of building permit application.*

~~**1208A.8.3**~~ **1207.11.3 Airport Noise Sources.** *Residential structures to be located where the annual Ldn or CNEL (as defined in Title 21, Subchapter 6, California Code of Regulations) exceeds 60 db shall require an acoustical analysis showing that the proposed design will achieve prescribed allowable interior level. For public-use airports or heliports, the Ldn or CNEL shall be determined from the airport land-use plan prepared by the county wherein the airport is located. For military bases, the Ldn shall be determined from the facility Air Installation Compatible Use Zone (AICUZ) plan. For all other airports or heliports, or public-use airports or heliports for which a land-use plan has not been developed, the Ldn or CNEL shall be determined from the noise element of the general plan of the local jurisdiction.*

When aircraft noise is not the only significant source, noise levels from all sources shall be added to determine the composite site noise level.

~~**1208A.8.4**~~ **1207.11.4 Other Noise Sources.** *Residential structures to be located where the Ldn or CNEL exceeds 60 db shall require an acoustical analysis showing that the proposed design will limit exterior noise to the prescribed allowable interior level. The noise element of the local general plan shall be used to the greatest extent possible to identify sites with noise levels potentially greater than 60 db.*

~~**1208A.8.5**~~ **1207.12 Compliance. [HCD 1]** *Evidence of compliance shall consist of submittal of an acoustical analysis report, prepared under the supervision of a person experienced in the field of acoustical engineering, with the application for a building permit. The report shall show ~~T~~topographical relationships of noise sources and dwelling sites, identification of noise sources and their characteristics, predicted noise spectra and levels at the exterior of the proposed dwelling structure considering present and future land usage, basis for the prediction (measured or obtained from published data), noise attenuation measures to be applied, and an analysis of the noise insulation effectiveness of the proposed construction showing that the prescribed interior noise level requirements are met.*

If interior allowable noise levels are met by requiring that windows be unopenable or closed, the design for the structure must also specify a ventilation or air-conditioning system to provide a habitable interior environment. The ventilation system must not compromise the dwelling unit or guest room noise reduction.

~~1208A.8.6~~ 1207.13* Field Testing. *[HCD 1] *When inspection indicates that the construction is not in accordance with the approved design, or that the noise reduction is compromised due to sound leaks or flanking paths, field testing may be required. A test report showing compliance or noncompliance with prescribed interior allowable levels shall be submitted to the building official.*

Measurements of outdoor sound levels shall generally follow the guidelines in ASTM E 1014.

Field measurements of the A-weighted airborne sound insulation of buildings from exterior sources shall generally follow the guidelines in ASTM E 966.

For the purpose of this standard, sound level differences measured in unoccupied units shall be normalized to a receiving room reverberation time of one-half second. Sound level differences measured in occupied units shall not be normalized to a standard reverberation time.

SECTION 1208
INTERIOR SPACE DIMENSIONS

1208.1 Minimum room widths. Habitable spaces, other than a kitchen, shall not be less than 7 feet (2134 mm) in any plan dimension. Kitchens shall have a clear passageway of not less than 3 feet (914 mm) between counter fronts and appliances or counter fronts and walls.

~~310.6.3 EXCEPTION [For HCD 1]:~~ [HCD 1] *For limited-density owner-built rural dwellings, there shall be no requirements for room dimensions, provided there is adequate light and ventilation and adequate means of egress.*

~~310.7~~ *~~[For HCD 1]~~*1208.4 Efficiency dwelling units. ~~An efficiency living unit shall conform to the requirements of the Code except as modified herein *or as provided in Health and Safety Code Section 17958.1*~~ ***[HCD 1]*** *Unless modified by local ordinance pursuant to Health and Safety Code Section 17958.1, efficiency dwelling units shall comply with the following:*

1. The unit shall have a living room of not less than 220 square feet (20.4 m^2) of floor area. An additional 100 square feet (9.3 m^2) of floor area shall be provided for each occupant of such unit in excess of two.

2. The unit shall be provided with a separate closet.

3. The unit shall be provided with a kitchen sink, cooking appliance and refrigeration facilities, each having a clear working space of not less than 30 inches (762 mm) in front. Light and ventilation conforming to this code shall be provided.

4. The unit shall be provided with a separate bathroom containing a water closet, lavatory and bathtub or shower.

~~Note:~~ [HCD 1] *~~Not withstanding other provisions of law, the applicable subsection of the Health and Safety Code is repeated here for clarity and reads as follows~~ For additional information, see Health and Safety Code Section 17958.1.*

~~Section 17958.1~~*. ~~Notwithstanding Sections 17922, 17958, and 17958.5, a city or county may, by ordinance, permit efficiency units for occupancy by no more than two persons which have a minimum floor area of 150 square feet and which may also have partial kitchen or bathroom facilities, as specified by the ordinance. In all other respects, these efficiency units shall conform to minimum standards for those occupancies otherwise made applicable pursuant to this part. "Efficiency unit," as used in this Section, has the same meaning specified in the Uniform Building Code of the International Conference of Building Officials, as incorporated by reference in Chapter 2-12 of Part 2 of Title 24 of the California Code of Regulations.~~*

~~"Efficiency unit," as used in this Section, has the same meaning specified in the Uniform Building Code of the International Conference of Building Officials, as incorporated by reference in Chapter 2-12 of Part 2 of Title 24 of the California Code of Regulations.~~

1209.3 Mechanical appliances. Access to mechanical appliances installed in under-floor areas, in attic spaces and on roofs or elevated structures shall be in accordance with the *~~International~~* *California Mechanical Code*.

SECTION 1211
GARAGE DOOR SPRINGS

Section ~~312.7~~ 1211.1 ~~[For HCD 1 and HCD 2] Springs~~ General. [HCD 1 and HCD 2] *This section shall apply to applications listed in Sections 108.2.1.1 and 108.2.1.3 regulated by the Department of Housing and Community Development,*

~~312.7.1~~ 1211.1.1 Extension garage door springs. *Every garage door spring sold or offered for sale, whether new or as a replacement, or installed in any garage or carport which is accessory to an apartment house, hotel, motel or dwelling shall conform to the following requirements:*

~~312.7.1.1~~ *Hard-drawn spring wire shall conform to ~~ASTM A 22-71~~ ASTM A227-71 or a more current version, and shall be made by the steel processes described therein, conforming to the chemical compositions requirements listed and meeting the standards of steel heat as set forth by the ladle analysis. Wire tensile strength and dimension variations shall meet the prescribed properties of established standards.*

~~312.7.1.2~~ *Oil-tempered wire shall conform to ~~ASTM A 229-71~~ ASTM A229 -71 or a more current version, and shall be made by the steel processes described therein, conforming to the chemical compositions requirements listed and meeting the standards of steelheat as set forth by the ladle analysis. Wire tensile strength and dimension variations shall meet the prescribed properties of established standards.*

~~312.7.1.3~~ *Extension springs shall be fabricated from either hard-drawn spring wire or oil-tempered wire as ~~required in Sections 312.7.1.1 and 312.7.1.2~~ specified above.*

~~312.7.2~~ 1211.2 Design Standards. [HCD 1 and HCD 2] *Minimum design standard shall be 9,000 cycles. (One cycle is equal to door opening plus door closing at maximum working load.)*

~~312.7.3~~ 1211.3 Certification. [HCD 1 and HCD 2]

~~312.7.3.1~~ *Mill certification of wire physical tests and chemical properties shall be kept on file by the spring manufacturer.*

~~312.7.3.2~~ *Physical cycling tests shall be performed for each spring design and shall be certified by an approved testing agency acceptable to the department and reports kept on file by the manufacturer.*

Containment devices shall be physically tested for each spring design by installing the device on the spring and by destroying the spring at maximum recommended stretch. Containment tests shall be certified by an approved testing agency acceptable to the department and reports kept on file by the manufacturer.

~~312.7.4~~ 1211.4 Containment Devices. [HCD 1 and HCD 2] *Each spring shall be equipped with an approved device capable of restraining the spring or any part thereof in the event it breaks.*

~~312.7.5~~ 1211.5 Identification. [HCD 1 and HCD 2] *Springs shall be permanently identified as to manufacturer and also to indicate maximum recommended stretch. Both springs and containment devices shall bear information stating that they have been manufactured in accordance with requirements of the California Department of Housing and Community Development.*

~~312.7.6~~ 1211.6* Installation. *[HCD 1 and HCD 2] *Installation of springs, containment devices and hardware shall be in accordance with the manufacturer's installation instructions. Instructions shall be provided by the manufacturer and shall specify the approved method of restraint and maximum recommended stretch. Unless otherwise permitted by the manufacturer's installation instructions, the hardware and springs shall be mounted to nominal 12 by 6 framing members which shall be of a species identified as Group I or II in Volume 3, Chapter 23, Division III.*

NOTE:
Authority cited: Health and Safety Code Sections 17040, 17921, 17922, 18300, 18865 and 19990; and Government Code Sections 12955.1 and 12955.1.1.
Reference: Health and Safety Code Sections 17000 through 17060, 17910 through 17990, 18620, 18630, 18640, 18670, 18690, 18691, 18873 through 18873.5 and 19960 through 19997; and Government Code Sections 12955.1 and 12955.1.1.

CHAPTER 13
ENERGY EFFICIENCY

(Note: This chapter is not adopted. HCD is proposing it be removed in its entirety from the California Building Code.)

MATRIX ADOPTION TABLE NOTATION:
The ♦ designation indicates that the State Fire Marshal's adoption of this chapter is applicable to structures subject to HCD 1 and HCD 2.

NOTE:
Authority cited: Health and Safety Code Sections 17040, 17921, 17922, 18300, 18865 and 19990; and Government Code Sections 12955.1 and 12955.1.1.
Reference: Health and Safety Code Sections 17000 through 17060, 17910 through 17990, 18620, 18630, 18640, 18670, 18690, 18691, 18873 through 18873.5 and 19960 through 19997; and Government Code Sections 12955.1 and 12955.1.1.

CHAPTER 14
EXTERIOR WALLS

(Note: Adopt entire chapter without amendments.)

MATRIX ADOPTION TABLE NOTATION:
The ♦ designation indicates that the State Fire Marshal's adoption of this chapter is applicable to structures subject to HCD 1 and HCD 2.

NOTE: Authority cited: Health and Safety Code Sections 17040, 17921, 17922, 18300, 18865 and 19990; and Government Code Sections 12955.1 and 12955.1.1.
Reference: Health and Safety Code Sections 17000 through 17060, 17910 through 17990, 18620, 18630, 18640, 18670, 18690, 18691, 18873 through 18873.5 and 19960 through 19997; and Government Code Sections 12955.1 and 12955.1.1.

CHAPTER 15
ROOF ASSEMBLIES AND ROOFTOP STRUCTURES

(Note: Adopt entire chapter with amendments.)

MATRIX ADOPTION TABLE NOTATION:
The ♦ designation indicates that the State Fire Marshal's adoption of this chapter is applicable to structures subject to HCD 1 and HCD 2.

1503.4 Roof Drainage. Design and installation of roof drainage systems shall comply with the ~~*International*~~ *California Plumbing Code*.

NOTE:
Authority cited: Health and Safety Code Sections 17040, 17921, 17922, 18300, 18865 and 19990; and Government Code Sections 12955.1 and 12955.1.1.
Reference: Health and Safety Code Sections 17000 through 17060, 17910 through 17990, 18620, 18630, 18640, 18670, 18690, 18691, 18873 through 18873.5 and 19960 through 19997; and Government Code Sections 12955.1 and 12955.1.1.

CHAPTER 16
STRUCTURAL DESIGN

(Note: Adopt entire chapter with amendments.)

MATRIX ADOPTION TABLE NOTATION:
The ♦ designation indicates that the State Fire Marshal's adoption of this chapter is applicable to structures subject to HCD 1 and HCD 2.

1607.7 Loads on Handrails, Guards, Grab Bars, *Shower Seats, Dressing Room Bench Seats* and Vehicle Barriers. Handrails, guards, grab bars ~~as designed in ICC A117.1~~ ~~*shall comply with Chapter 11A or Chapter 11B as applicable*~~ and vehicle barriers shall be designed and constructed to the structural loading conditions set forth in this section.

1607.7.2 Grab Bars, Shower Seats and Dressing Room Bench Seats. Grab bars, shower seats and dressing room bench seat systems shall be designed to resist a single concentrated load of 250 pounds (1.11 kN) applied in any direction at any point. ~~*For applications listed in Section 108.2.1.2 regulated by the Department of Housing and Community Development, see*~~ ***[HCD 1/AC]*** *See Chapter 11A, Section 1127A.4.* ~~*For applications listed in Section 109.1 regulated by the Division of the State Architect/Access Compliance, see Chapter 11A, Section 1127A.4*~~ *and Chapter 11B, Sections 1110B.1.7 and 1115B.8.3* ~~*1115B.7.2*~~ *for grab bars, shower seats, and dressing room bench seats, as applicable.*

1613.6.1 Assumption of Flexible Diaphragm. Add the following text at the end of Section 12.3.1.1 of ASCE 7:

Diaphragms constructed of wood structural panels or untopped steel decking shall also be permitted to be idealized as flexible, provided all of the following conditions are met:

1. Toppings of concrete or similar materials are not placed over wood structural panel diaphragms except for nonstructural toppings no greater than $1^1/_2$inches (38 mm) thick.

2. Each line of vertical elements of the lateral-force-resisting system complies with the allowable story drift of Table 12.12-1.

3. Vertical elements of the lateral-force-resisting system are light-framed walls sheathed with wood structural panels rated for shear resistance or steel sheets.

4. Portions of wood structural panel diaphragms that cantilever beyond the vertical elements of the lateral-force-resisting system are designed in accordance with Section 2305.2.5 of the ~~*International*~~ *California Building Code*.

NOTE: Authority cited: Health and Safety Code Sections 17040, 17921, 17922, 18300, 18865 and 19990; and Government Code Sections 12955.1 and 12955.1.1.
Reference: Health and Safety Code Sections 17000 through 17060, 17910 through 17990, 18620, 18630, 18640, 18670, 18690, 18691, 18873 through 18873.5 and 19960 through 19997; and Government Code Sections 12955.1 and 12955.1.1.

CHAPTER 17
STRUCTURAL TESTS AND SPECIAL INSPECTIONS

(Note: Adopt entire chapter with amendments.)

MATRIX ADOPTION TABLE NOTATION:
The ♦ designation indicates that the State Fire Marshal's adoption of this chapter is applicable to structures subject to HCD 1 and HCD 2.

SECTION 1702
DEFINITIONS

APPROVED AGENCY. An agency established and recognized agency regularly engaged in conducting tests or furnishing inspection services, when such agency has been approved. ~~*For applications listed in Section 108.2.1 regulated by the Department of Housing and Community Development,*~~***[HCD 1 & HCD 2]*** *"Approved Agency" shall mean 'Listing Agency" and "Testing Agency", See Chapter 2 definitions.*

1704.1 General. Where application is made for construction as described in this section, the owner or the registered design professional in responsible charge acting as the owner's agent shall employ one or more special inspectors to provide inspections during construction on the types of work listed under Section 1704. The special inspector shall be a qualified person who shall demonstrate competence, to the satisfaction of the building official, for inspection of the particular type of construction or operation requiring special inspection. These inspections are in addition to the inspections specified in Section 109.

Exceptions:

1. Special inspections are not required for work of a minor nature or as warranted by conditions in the jurisdiction as approved by the building official.

2. Special inspections are not required for building components unless the design involves the practice of professional engineering or architecture as defined by applicable state statutes and regulations governing the professional registration and certification of engineers or architects.

3. Unless otherwise required by the building official, special inspections are not required for occupancies in Group R-3 ~~as applicable in Section 101.2~~ and occupancies in Group U that are accessory to a residential occupancy including, but not limited to, those listed in Section 312.1.

~~***1704.1.2.1 [For HCD 1] Factory-Built Housing.***~~ *4.* ***[HCD 1]*** *The provisions of Health and Safety Code Division 13, Part 6 and the California Code of Regulations, Title 25, Division 1, Chapter 3, commencing with Section 3000, shall apply to the construction and inspection of Factory-Built Housing as defined in Health and Safety Code Section 19971.*

NOTE:
Authority cited: Health and Safety Code Sections 17040, 17921, 17922, 18300, 18865 and 19990; and Government Code Sections 12955.1 and 12955.1.1.
Reference: Health and Safety Code Sections 17000 through 17060, 17910 through 17990, 18620, 18630, 18640, 18670, 18690, 18691, 18873 through 18873.5 and 19960 through 19997; and Government Code Sections 12955.1 and 12955.1.1.

CHAPTER 18
SOILS AND FOUNDATIONS

(Note: Adopt entire chapter with amendments.)

1801.2 Design. Allowable bearing pressures, allowable stresses and design formulas provided in this chapter shall be used with the allowable stress design load combinations specified in Section 1605.3. The quality and design of materials used structurally in excavations, footings and foundations shall conform to the requirements specified in Chapters 16, 19, 21, 22 and 23 of this code. Excavations and fills shall also comply with Chapter 33.

(Section 1802 Exception, 2001 CBC) ***~~[For HCD 1] EXCEPTION:~~*** ***[HCD 1]*** *For limited-density owner-built rural dwellings, pier foundations, stone masonry footings and foundations, pressure-treated lumber, poles, or equivalent foundation materials or designs may be used provided that the bearing is sufficient for the purpose intended.*

1802.1 General. Foundation and soils investigations shall be conducted in conformance with Sections 1802.2 through 1802.6. Where required by the building official, the classification and investigation of the soil shall be made by a registered design professional.

1802.1.1 General and where required for applications listed in Section 108.2.1.1 regulated by the Department of Housing and Community Development. [HCD 1] *Foundation and soils investigations shall be conducted in conformance with Health and Safety Code Sections 17953 through 17955 as summarized below.*

(Section 1804.1 Note, 2001 CBC)~~NOTE: [For HCD 1]~~ *~~Subject to other provisions of law, the applicable Section and subsection of the Health and Safety Code are repeated here for clarity and reads as follows:~~*

~~Section 17953.~~ ***1802.1.1.1 Preliminary soil report.*** *Each city, county~~, and~~ or city and county shall enact an ordinance which requires a preliminary soil report, prepared by a civil engineer who is registered by the state. The report shall be based upon adequate test borings or excavations, of every subdivision, where a tentative and final map is required pursuant to Section 66426 of the Government Code.*

The preliminary soil report may be waived if the building department of the city, county or city and county, or other enforcement agency charged with the administration and enforcement of the provisions of this part, shall determine that, due to the knowledge such department has as to the soil qualities of the soil of the subdivision or lot, no preliminary analysis is necessary.

~~Section 17954~~ ***1802.1.1.2 Soil investigation by lot, necessity, preparation, and recommendations.*** *If the preliminary soil report indicates the presence of critically expansive soils or other soil problems which, if not corrected, would lead to structural defects, such ordinance shall require a soil investigation of each lot in the subdivision.*

The soil investigation shall be prepared by a civil engineer who is registered in this state. It shall recommend corrective action which is likely to prevent structural damage to each dwelling proposed to be constructed on the expansive soil.

~~Section 17955~~ ***1802.1.1.3 Approval, building permit conditions, appeal.*** *The building department of each city, county or city and county, or other enforcement agency charged with the administration and enforcement of the provisions of this part, shall approve the soil investigation if it determines that the recommended action is likely to prevent structural damage to each dwelling to be constructed. As a condition to the building permit, the ordinance shall require that the approved recommended action be incorporated in the construction of each dwelling. Appeal from such determination shall be to the local appeals board.*

1807.4.3 Drainage discharge. The floor base and foundation perimeter drain shall discharge by gravity or mechanical means into an approved drainage system that complies with the ~~*International*~~ *California Plumbing Code*.

Exception: Where a site is located in well-drained gravel or sand/gravel mixture soils, a dedicated drainage system is not required.

NOTE:
Authority cited: Health and Safety Code Sections 17040, 17921, 17922, 18300, 18865 and 19990; and Government Code Sections 12955.1 and 12955.1.1.
Reference: Health and Safety Code Sections 17000 through 17060, 17910 through 17990, 18620, 18630, 18640, 18670, 18690, 18691, 18873 through 18873.5 and 19960 through 19997; and Government Code Sections 12955.1 and 12955.1.1.

CHAPTER 19
CONCRETE

(Note: Adopt the entire chapter with amendments.)

1908.1.10 ACI 318, Section 21.10.1.1. Modify ACI 318, Section 21.10.1.1, to read as follows:

21.10.1.1 - Foundations resisting earthquake-induced forces or transferring earthquake-induced forces between a structure and the ground shall comply with the requirements of Section 21.10 and other applicable provisions of ACI 318 *unless modified by Chapter 18 of the* ~~*International*~~ *California Building Code*.

1908.1.12 ACI 318, Section 21.12.5. Modify ACI 318, Section 21.12.5, by adding new Section 21.12.5.6 to read as follows:

21.12.5.6 - Columns supporting reactions from discontinuous stiff members, such as walls, shall be designed for the special load combinations in Section 1605.4 of the ~~*International*~~ *California Building Code and shall be provided with transverse reinforcement at the spacing,* s_o*, as defined in 21.12.5.2 over their full height beneath the level at which the discontinuity occurs. This transverse reinforcement shall be extended above and below the column as required in 21.4.4.5.*

NOTE:
Authority cited: Health and Safety Code Sections 17040, 17921, 17922, 18300, 18865 and 19990; and Government Code Sections 12955.1 and 12955.1.1.
Reference: Health and Safety Code Sections 17000 through 17060, 17910 through 17990, 18620, 18630, 18640, 18670, 18690, 18691, 18873 through 18873.5 and 19960 through 19997; and Government Code Sections 12955.1 and 12955.1.1.

CHAPTER 20
ALUMINUM

(Note: Adopt the entire chapter without amendments.)

NOTE:
Authority cited: Health and Safety Code Sections 17040, 17921, 17922, 18300, 18865 and 19990; and Government Code Sections 12955.1 and 12955.1.1.
Reference: Health and Safety Code Sections 17000 through 17060, 17910 through 17990, 18620, 18630, 18640, 18670, 18690, 18691, 18873 through 18873.5 and 19960 through 19997; and Government Code Sections 12955.1 and 12955.1.1.

CHAPTER 21
MASONRY

(Note: Adopt the entire chapter with amendments.)

2107.4 ACI 530/ASCE 5/TMS 402, Section 2.1.6, columns. Add the following text to Section 2.1.6:

2.1.6.6 Light-frame construction. Masonry columns used only to support light-frame roofs of carports, porches, sheds or similar structures with a maximum area of 450 square feet (41.8 m^2) assigned to Seismic Design Category A, B or C are permitted to be designed and constructed as follows:

1. Concrete masonry materials shall be in accordance with Section 2103.1 of the ~~*International*~~ *California Building Code*. Clay or shale masonry units shall be in accordance with Section 2103.2 of the ~~*International*~~ *California Building Code*.

2. The nominal cross-Sectional dimension of columns shall not be less than 8 inches (203 mm).

3. Columns shall be reinforced with not less than one No. 4 bar centered in each cell of the column.

4. Columns shall be grouted solid.

5. Columns shall not exceed 12 feet (3658 mm) in height.

6. Roofs shall be anchored to the columns. Such anchorage shall be capable of resisting the design loads specified in Chapter 16 of the ~~*International*~~ *California Building Code*.

2113.11.1.2 Gas appliances. Flue lining systems for gas appliances shall be in accordance with the ~~*International Fuel Gas*~~ *California Mechanical Code*.

2113.15 Flue area (appliance). Chimney flues shall not be smaller in area than the area of the connector from the appliance. Chimney flues connected to more than one appliance shall not be less than the area of the largest connector plus 50 percent of the areas of additional chimney connectors.

Exceptions:

1. Chimney flues serving oil-fired appliances sized in accordance with NFPA 31.

2. Chimney flues serving gas-fired appliances sized in accordance with the ~~*International Fuel Gas*~~ *California Mechanical Code*.

NOTE:
Authority cited: Health and Safety Code Sections 17040, 17921, 17922, 18300, 18865 and 19990; and Government Code Sections 12955.1 and 12955.1.1.
Reference: Health and Safety Code Sections 17000 through 17060, 17910 through 17990, 18620, 18630, 18640, 18670, 18690, 18691, 18873 through 18873.5 and 19960 through 19997; and Government Code Sections 12955.1 and 12955.1.1.

CHAPTER 22
STEEL

(Note: Adopt the entire chapter without amendments.)

NOTE:
Authority cited: Health and Safety Code Sections 17040, 17921, 17922, 18300, 18865 and 19990; and Government Code Sections 12955.1 and 12955.1.1.
Reference: Health and Safety Code Sections 17000 through 17060, 17910 through 17990, 18620, 18630, 18640, 18670, 18690, 18691, 18873 through 18873.5 and 19960 through 19997; and Government Code Sections 12955.1 and 12955.1.1.

CHAPTER 23
WOOD

(Note: Adopt the entire chapter with amendments.)

2301.1 Scope. The provisions of this chapter shall govern the materials, design, construction, and quality of wood members and their fasteners.

*(Section 2304.2, Exception, 2001 CBC)~~**EXCEPTION [For HCD 1]:**~~ **[HCD 1]** For limited-density owner-built rural dwellings, owner-produced or used materials and appliances may be utilized unless found not to be of sufficient strength or durability to perform the intended function; owner-produced or used lumber, or shakes and shingles may be utilized unless found to contain dry rot, excessive splitting, or other defects obviously rendering the material unfit in strength or durability for the intended purpose.*

2304.5 Framing Around Flues and Chimneys. Combustible framing shall be a minimum of 2 inches (51 mm), but shall not be less than the distance specified in Sections 2111 and 2113 and the ~~*International*~~ *California Mechanical Code*, from flues, chimneys and fireplaces, and 6 inches (152 mm) away from flue openings.

2308.1 General. The requirements of this section are intended for conventional light-frame construction. Other methods are permitted to be used, provided a satisfactory design is submitted showing compliance with other provisions of this code. Interior nonload-bearing partitions, ceilings and curtain walls of conventional light-frame construction are not subject to the limitations of this section. Alternatively, compliance with AF&PA WFCM shall be permitted subject to the limitations therein and the limitations of this code. ~~Detached one- and two-family dwellings and multiple single-family dwellings (townhouses) not more than three stories above grade plane in height with a separate means of egress and their accessory structures shall comply with the *International Residential Code*.~~

2308.2.2 Buildings in Seismic Design Category B, C, D or E. Buildings of conventional light-frame construction in Seismic Design Category B or C, as determined in Section 1613, shall comply with the additional requirements in Section 2308.11.

Exceptions:

*1. **[HCD 1]** Detached one- and two-family dwellings in Seismic Design Category B.*

*2. **[HCD 1]** Detached one- and two-family dwellings in Seismic Design Category C where masonry veneer is limited to the first two stories above grade.*

TABLE 2308.9.3(1)

BRACED WALL PANELS[a]

SEISMIC DESIGN CATEGORY	CONDITION	CONSTRUCTION METHODS[b,c]								BRACED PANEL LOCATION AND LENGTH[d]
		1	2	3	4	5	6	7	8	
A and B	One story, top of two or three story	X	X	X	X	X	X	X	X	Located in accordance with Section 2308.9.3 and not more than 25 feet on center.
	First story of two story or second story of three story	X	X	X	X	X	X	X	X	
	First story of three story	—	X	X	X	X[e]	X	X	X	
C	One story or top of two story ***[HCD 1]***or three story	—	X	X	X	X	X	X	X	Located in accordance with Section 2308.9.3 and not more than 25 feet on center.
	First story of two story ***[HCD 1]*** or second story of three story	—	X	X	X	X[e]	X	X	X	Located in accordance with Section 2308.9.3 and not more than 25 feet on center, but total length shall not be less than 25% of building length[f].
	[HCD 1]First story of three story	—	X	X	X	X[e]	X	X	X	***[HCD 1]*** Located in accordance with Section 2308.9.3 and not more than 25 feet on center, but total length shall not be less than 40% of building length[f].

2308.11 Additional Requirements for Conventional Construction in Seismic Design Category B or C. Structures of conventional light-frame construction in Seismic Design Category B or C, as determined in Section 1616, shall comply with Sections 2308.11.1 through 2308.11.3, in addition to the provisions of Sections 2308.1 through 2308.10.

2308.11.1 Number of Stories. Structures of conventional light-frame construction shall not exceed two stories in height in Seismic Design Category C.

Exception: ***[HCD 1]*** *Detached one- and two-family dwellings are permitted to be three stories in height in Seismic Design Category C.*

2308.12 Additional Requirements for Conventional Construction in Seismic Design Category D or E. Structures of conventional light-frame construction in Seismic Design Category D or E, as determined in Section 1616, shall conform to Sections 2308.12.1 through 2308.12.9, in addition to the requirements for Seismic Design Category B or C in Section 2308.11.

2308.12.1 Number of Stories. Structures of conventional light-frame construction shall not exceed one story in height in Seismic Design Category D or E.

Exception: ***[HCD 1]*** *Detached one- and two-family dwellings are permitted to be two stories high in Seismic Design Category D or E.*

TABLE 2308.12.4

WALL BRACING IN SEISMIC DESIGN CATEGORIES D AND E

(Minimum Length of Wall Bracing per each 25 Linear Feet of Braced Wall Line[a])

CONDITION	SHEATHING TYPE[b]	$S_{DS} < 0.50$	$0.50 \le S_{DS} < 0.75$	$0.75 \le S_{DS} \le 1.00$	$S_{DS} > 1.00$
One story	G-P[c]	10 feet 8 inches	14 feet 8 inches	18 feet 8 inches	25 feet 0 inches
	S-W	5 feet 4 inches	8 feet 0 inches	9 feet 4 inches	12 feet 0 inches
Story below top story ***[HCD 1]***	*G-P[c,d]*	*18 feet 8 inches[d]*	*NP*	*NP*	*NP*
	S-W[d]	*10 feet 8 inches[d]*	*13 feet 4 inches[d]*	*17 feet 4 inches[d]*	*21 feet 4 inches[d]*
Bottom story of three stories ***[HCD 1]***	*G-P*	*Conventional construction not permitted; conformance with Section 2301.2, Items 1 or 2 is required.*			
	S-W				

For SI: 1 inch = 25.4 mm, 1 foot = 304.8 mm.

a. Minimum length of panel bracing of one face of the wall for S-W sheathing or both faces of the wall for G-P sheathing; h/w ratio shall not exceed 2:1. For S-W panel bracing of the same material on two faces of the wall, the minimum length is permitted to be one-half the tabulated value but the h/w ratio shall not exceed 2:1 and design for uplift is required.

b. G-P = gypsum board, fiberboard, particleboard, lath and plaster or gypsum sheathing boards; S-W = wood structural panels and diagonal wood sheathing. *NP = not permitted.*

c. Nailing as specified below shall occur at all panel edges at studs, at top and bottom plates and, where occurring, at blocking:

For $^{1}/_{2}$-inch gypsum board, 5d (0.113 inch diameter) cooler nails at 7 inches on center;

For $^{5}/_{8}$-inch gypsum board, No. 11 gage (0.120 inch diameter) at 7 inches on center;

For gypsum sheathing board, $1^{3}/_{4}$ inches long by $^{7}/_{16}$-inch head, diamond point galvanized nails at 4 inches on center;

For gypsum lath, No. 13 gage (0.092 inch) by $1^{1}/_{8}$ inches long, $^{19}/_{64}$-inch head, plasterboard at 5 inches on center;

For Portland cement plaster, No. 11 gage (0.120 inch) by $1^{1}/_{2}$ inches long, $^{7}/_{16}$- inch head at 6 inches on center;

For fiberboard and particleboard, No. 11 gage (0.120 inch) by $1^{1}/_{2}$ inches long, $^{7}/_{16}$-inch head, galvanized nails at 3 inches on center.

d. ***[HCD 1]*** *Applies to detached one- and two- family dwellings only.*

NOTE:
Authority: Health and Safety Code Sections 17040, 17921, 17922, 18300, 18865 and 19990; and Government Code Sections 12955.1 and 12955.1.1.
Reference: Health and Safety Code Sections 17000 through 17060, 17910 through 17990, 18620, 18630, 18640, 18670, 18690, 18691, 18873 through 18873.5 and 19960 through 19997; and Government Code Sections 12955.1 and 12955.1.1.

CHAPTER 24
GLASS AND GLAZING

(Note: Adopt the entire chapter without amendments.)

NOTE:
Authority cited: Health and Safety Code Sections 17040, 17921, 17922, 18300, 18865 and 19990; and Government Code Sections 12955.1 and 12955.1.1.
Reference: Health and Safety Code Sections 17000 through 17060, 17910 through 17990, 18620, 18630, 18640, 18670, 18690, 18691, 18873 through 18873.5 and 19960 through 19997; and Government Code Sections 12955.1 and 12955.1.1.

CHAPTER 25
GYPSUM BOARD AND PLASTER

(Note: Adopt the entire chapter without amendments.)

NOTE:
Authority cited: Health and Safety Code Sections 17040, 17921, 17922, 18300, 18865 and 19990; and Government Code Sections 12955.1 and 12955.1.1.
Reference: Health and Safety Code Sections 17000 through 17060, 17910 through 17990, 18620, 18630, 18640, 18670, 18690, 18691, 18873 through 18873.5 and 19960 through 19997; and Government Code Sections 12955.1 and 12955.1.1.

CHAPTER 26
PLASTIC

(Note: Adopt the entire chapter without amendments.)

NOTE:
Authority cited: Health and Safety Code Sections 17040, 17921, 17922, 18300, 18865 and 19990; and Government Code Sections 12955.1 and 12955.1.1.
Reference: Health and Safety Code Sections 17000 through 17060, 17910 through 17990, 18620, 18630, 18640, 18670, 18690, 18691, 18873 through 18873.5 and 19960 through 19997; and Government Code Sections 12955.1 and 12955.1.1.

CHAPTER 27
ELECTRICAL

(Note: Adopt only those Sections listed in the matrix adoption table.)

2701.1 Scope. This chapter governs the electrical components, equipment and systems used in buildings and structures covered by this code. Electrical components, equipment and systems shall be designed and constructed in accordance with the provisions of the ~~ICC~~ *California Electrical Code*.

NOTE: Authority: Health and Safety Code Sections 17040, 17921, 17922, 18300, 18865 and 19990; and Government Code Sections 12955.1 and 12955.1.1.
Reference: Health and Safety Code Sections 17000 through 17060, 17910 through 17990, 18620, 18630, 18640, 18670, 18690, 18691, 18873 through 18873.5 and 19960 through 19997; and Government Code Sections 12955.1 and 12955.1.1.

CHAPTER 28
MECHANICAL SYSTEMS

(Note: Adopt only those sections listed in the Matrix Adoption Table.)

2801.1 Scope. Mechanical appliances, equipment and systems shall be constructed, installed and maintained in accordance with the ~~International Mechanical Code and the International Fuel Gas Code~~ *California Mechanical Code*. Masonry chimneys, fireplaces and barbecues shall comply with the ~~International~~ *California Mechanical Code* and Chapter 21 of this code.

NOTE:
Authority cited: Health and Safety Code Sections 17040, 17921, 17922, 18300, 18865 and 19990; and Government Code Sections 12955.1 and 12955.1.1.
Reference: Health and Safety Code Sections 17000 through 17060, 17910 through 17990, 18620, 18630, 18640, 18670, 18690, 18691, 18873 through 18873.5 and 19960 through 19997; and Government Code Sections 12955.1 and 12955.1.1.

CHAPTER 29
PLUMBING SYSTEMS

(Note: Adopt only those sections listed in the Matrix Adoption Table.)

2901.1 Scope. The provisions of t~~his chapter and~~ the ~~International~~ *California Plumbing Code* shall govern the erection, installation, alteration, repairs, relocation, replacement, addition to, use or maintenance of plumbing equipment and systems. Plumbing systems and equipment shall be constructed, installed and maintained in accordance with the ~~International~~ *California Plumbing Code*. Private sewage disposal systems shall conform to the ~~International Private Sewage Disposal~~ *California Plumbing* Code.

(Section 2902.6 Note, 2001 CBC) ~~***[For HCD1] NOTE:*** *See Exception to Section 303, Part 5, Title 24, California Code of Regulations.*~~

NOTE:
Authority cited: Health and Safety Code Sections 17040, 17921, 17922, 18300, 18865 and 19990; and Government Code Sections 12955.1 and 12955.1.1.
Reference: Health and Safety Code Sections 17000 through 17060, 17910 through 17990, 18620, 18630, 18640, 18670, 18690, 18691, 18873 through 18873.5 and 19960 through 19997; and Government Code Sections 12955.1 and 12955.1.1.

CHAPTER 30
ELEVATORS AND CONVEYING SYSTEMS

(Note: Adopt only those sections listed in the Matrix Adoption Table.)

MATRIX ADOPTION TABLE NOTATION:
The ♦ designation indicates that the State Fire Marshal's adoption of this chapter or sections is applicable to structures subject to HCD 1 and/or HCD 2.

~~***3001.1 [For HCD 1 and HCD 1/AC]*** *For elevators and special access lifts in covered multifamily dwellings see Chapter 11A, Section 1110A.*~~

3001.3 Accessibility. Passenger elevators required to be accessible by Chapters 11*A or 11B* shall conform to ~~ICC A117.1~~ *Chapter 11A for applications listed in Section 108.2.1.2 regulated by the Department of Housing and Community Development or Chapter 11B for applications listed in Section 109 regulated by the Division of the State Architect.*

NOTE:
Authority cited: Health and Safety Code Sections 17040, 17921, 17922, 18300, 18865 and 19990; and Government Code Sections 12955.1 and 12955.1.1.
Reference: Health and Safety Code Sections 17000 through 17060, 17910 through 17990, 18620, 18630, 18640, 18670, 18690, 18691, 18873 through 18873.5 and 19960 through 19997; and Government Code Sections 12955.1 and 12955.1.1.

CHAPTER 31
SPECIAL CONSTRUCTION

(Note: Adopt only those sections listed in the Matrix Adoption Table.)

3104.2 Separate structures. Connected buildings shall be considered to be separate structures.

Exceptions:

1. Buildings on the same lot in accordance with Section 503.1.2.

2. ***[HCD 1/AC]***For purposes of *accessibility* ~~calculating the number of Type B units required by Chapter 11~~ *as required by Chapter 11A*, structurally connected buildings*, buildings connected by stairs, walkways, or roofs,* and buildings with multiple wings shall be considered one structure.

NOTE:
Authority cited: Health and Safety Code Sections 17040, 17921, 17922, 18300, 18865 and 19990; and Government Code Sections 12955.1 and 12955.1.1.
Reference: Health and Safety Code Sections 17000 through 17060, 17910 through 17990, 18620, 18630, 18640, 18670, 18690, 18691, 18873 through 18873.5 and 19960 through 19997; and Government Code Sections 12955.1 and 12955.1.1.

CHAPTER 32
ENCROACHMENT INTO PUBLIC RIGHT-OF-WAY

(Note: Adopt entire chapter without amendments.)

NOTE:
Authority cited: Health and Safety Code Sections 17040, 17921, 17922, 18300, 18865 and 19990; and Government Code Sections 12955.1 and 12955.1.1.
Reference: Health and Safety Code Sections 17000 through 17060, 17910 through 17990, 18620, 18630, 18640, 18670, 18690, 18691, 18873 through 18873.5 and 19960 through 19997; and Government Code Sections 12955.1 and 12955.1.1.

CHAPTER 33
SAFEGUARDS DURING CONSTRUCTION

(Note: Adopt only those sections listed in the Matrix Adoption Table.)

3306.2 Walkways. A walkway shall be provided for pedestrian travel in front of every construction and demolition site unless the authority having jurisdiction authorizes the sidewalk to be fenced or closed. Walkways shall be of sufficient width to accommodate the pedestrian traffic, but in no case shall they be less than 4 feet (1219 mm) in width. Walkways shall be provided with a durable walking surface. Walkways shall be accessible in accordance with Chapter*s 11A or 11B* and shall be designed to support all imposed loads and in no case shall the design live load be less than 150 pounds per square foot (psf) (7.2 kN/m2).

NOTE: Authority cited: Health and Safety Code Sections 17040, 17921, 17922, 18300, 18865 and 19990; and Government Code Sections 12955.1 and 12955.1.1.
Reference: Health and Safety Code Sections 17000 through 17060, 17910 through 17990, 18620, 18630, 18640, 18670, 18690, 18691, 18873 through 18873.5 and 19960 through 19997; and Government Code Sections 12955.1 and 12955.1.1.

CHAPTER 34
EXISTING STRUCTURES

(Note: Adopt only those sections listed in the Matrix Adoption Table.)

MATRIX ADOPTION TABLE NOTATION:
The ♦ designation indicates that the State Fire Marshal's adoption of this chapter is applicable to structures subject to HCD 1 and HCD 2.

3401.1 Scope. The provisions of this chapter shall control the alteration, repair, addition and change of occupancy of existing structures.

Exceptions:

1. Existing bleachers, grandstands and folding and telescopic seating shall comply with ICC 300-02.

2. ~~***3401.2 [For HCD 2] Scope.*** *The provisions and statutes of Section 104.2.1.1 shall control*~~ ***[HCD 2]*** *For moved buildings and maintenance, alteration, repair, addition, or change of occupancy to existing buildings and accessory structures in mobilehome parks or special occupancy parks as provided in Section* ~~*101.17.10*~~ *108.2.1.3 See California Code of Regulations, Title 25, Division 1, Chapter 2, and 2.2.*

3401.3 Compliance with Other Codes. Alterations, repairs, additions and changes of occupancy to existing structures shall comply with the provisions for alterations, repairs, additions and changes of occupancy in the International Fire Code, ~~International Fuel Gas Code, International~~ *California Plumbing Code*, ~~International Property Maintenance Code, International Private Sewage Disposal Code, International~~ *California Mechanical Code*, ~~International Residential Code~~ and ~~ICC~~ *California Electrical Code*. ~~*For applications listed in Section 108.2.1.1 regulated by the Department of Housing and Community Development,*~~

[HCD 1] *See Chapter 34, Section 3403.1, Exception 2 and Title 25, Division 1, Chapter 1, Subchapter 1, Article 1, commencing with Section 1 for existing buildings or structures.*

~~**104.13** ***[For HCD 1] Additions, alterations, repairs and moved buildings.***~~

~~***104.2.8.2 [For HCD 1] Additions, alterations, repairs and moved buildings.*** *Subject to other provisions of law, alterations, repairs, replacements, occupancy, use and maintenance provisions, and moved buildings are referenced in the State Housing Law, Health and Safety Code Sections 17912, 17920.3, 17922 (c), 17922.3, 17958.8 and 17958.9 and California Code of Regulations, Title 25, Chapter 1 commencing with Section 1 Health and Safety Code Sections 17958.8 and 17958.9 are repeated to provide clarity and read as follows:.*~~

~~***Section 17958.8.*** *Local ordinances or regulations governing alterations and repair of existing buildings shall permit the replacement, retention, and extension of original materials and the use of original methods of construction as long as the hotel, lodging house, motel, apartment house, or dwelling, or portions thereof, or building and structure accessory thereto, complies with the provisions published in the State Building Standards Code and the other rules and regulations of the department or alternative local standards adopted pursuant to Section 17920.7 and does not become or continue to be a substandard buildings.*~~

3403.1 Existing Buildings or Structures. Additions or alterations to any building or structure shall conform with the requirements of the code for new construction. Additions or alterations shall not be made to an existing building or structure which will cause the existing building or structure to be in violation of any provisions of this code. An existing building plus additions shall comply with the height and area provisions of Chapter 5. Portions of the structure not altered and not affected by the alteration are not required to comply with the code requirements for a new structure.

Exceptions:

1. ~~***310.14.1 [For HCD 1]***~~ ***[HCD 1]****Limited-density owner-built rural dwellings.* ~~*The provisions regulating the erection and construction of dwellings and appurtenant structures shall not apply to existing structures as to which construction is commenced or approved prior to the effective date of these regulations. Requirements relating to use, maintenance and occupancy shall apply to all dwellings and appurtenant structures approved for construction or constructed before or after the effective date of this chapter.*~~

2. ~~*For applications listed in Section 108.2.1.1 regulated by the Department of Housing and Community Development, local*~~ ***[HCD 1]*** *Local ordinances or regulations shall permit the replacement, retention, and extension of original materials, and the use of original methods of construction, for any building or accessory structure, provided such building or structure complied with the building code provisions in effect at the time of original construction and the building or accessory structure does not become or continue to be a substandard building. For additional information, see Health and Safety Code Sections 17912, 17920.3, 17922(d), 17922.3, 17958.8 and 17958.9.*

~~***3405.1 Conformance. [For HCD 1]*** No change shall be made in the use or occupancy of any building that would place the building in a different division of the same group of occupancy or in a different group of occupancies, unless such building is made to comply with the requirements of this Code for such division or group of occupancy….~~

(Section 104.2.8.2, Reprinted reference, 2001 CBC)~~***Section 17958.9.*** *Local ordinances or regulations governing the moving of apartment houses and dwellings shall, after July 1, 1978, permit the retention of existing materials and methods of construction so long as the apartment house or dwelling complies with the building standards for foundation applicable to new construction, and does not become or continue to be a substandard building.*~~

3408.1 Conformance. Structures moved into or within the jurisdiction shall comply with the provisions of this code for new structures.

Exception: ***[HCD 1]*** *After July 1, 1978, local ordinances or regulations for moved apartment houses and dwellings* ~~*under the application listed in Section 108.2.1.1 regulated by the Department of Housing and Community Development*~~ *shall permit the retention of existing materials and methods of construction, provided the apartment house or dwelling complies with the building standards for foundations applicable to new construction and does not become or continue to be a substandard building. For additional information, see Health and Safety Code Section 17958.9.*

~~[EB] SECTION 3409~~
~~ACCESSIBILITY FOR EXISTING BUILDINGS~~
(Note: This section will not be printed in the California Building Code.)

NOTE:
Authority cited: Health and Safety Code Sections 17040, 17921, 17922, 18300, 18865 and 19990; and Government Code Sections 12955.1 and 12955.1.1.
Reference: Health and Safety Code Sections 17000 through 17060, 17910 through 17990, 18620, 18630, 18640, 18670, 18690, 18691, 18873 through 18873.5 and 19960 through 19997; and Government Code Sections 12955.1 and 12955.1.1.

CHAPTER 35
REFERENCED STANDARDS

(Note: Adopt the entire chapter with amendments.)

ICC International Code Council
5203 Leesburg Pike, Suite 600
Falls Church, VA 22041

Standard reference number	Title	Referenced in code section number
~~ICC/ANSI A117.1-03~~	~~Accessible and Usable Buildings and Facilities~~	~~406.2.2, 907.9.1.3,1007.6.5, 1010.1, 1010.6.5, 1010.9, 1011.3, 1101.2, 1102.1, 1103.2.14, 1107.2, 1109.1, 1109.2, 1109.2.1.1, 1109.2.2, 1109.3, 1109.4, 1109.8, 3001.3, 3409.5, 3409.7.2, 3409.7.3~~
ICC 300-02	ICC Standard on Bleachers, Folding and Telescopic Seating and Grandstands	*1025.1.1, 3401.1*
~~ICC EC-06~~	~~ICC Electrical Code™~~	~~101.4.1, 107.3, 414.5.4, 414.9.2.8.1, 904.3.1, 907.5, 909.11, 909.12.1, 909.16.3, 1205.4.1, 1405.10.4, 2701.1, 2702.1, 3401.3~~
~~IECC-06~~	~~International Energy Conservation Code®~~	~~101.4.7, 1202.3.2, 1301.1.1, 1403.2~~
~~IFC-06~~	~~International Fire Code®~~	~~101.4.6, 102.6, 201.3, 307.9, Table 307.7(1), Table 307.7(2), 307.9, 404.2,406.5.1, 406.5.2, 406.6.1, 410.3.6, 411.1, 412.4.1, 413.1, 414.1.1, 414.1.2, 414.1.2.1, 414.2.4, Table 414.2.4, 414.3, 414.5, 414.5.1, Table 414.5.1, 414.5.2, 414.5.4, 414.5.5, 414.6, 415.1, 415.3, 415.3.1, Table 415.3.1, Table 415.3.2, 415.7, 415.7.1, 415.7.1.4, 415.7.2, 415.7.2.3, 415.7.2.5, 415.7.2.7, 415.7.2.8, 415.7.2.9, 415.7.3, 415.7.3.3.3,~~

		~~415.7.3.5, 415.7.4, 415.8, 415.9.1, 415.9.2.7, 415.9.5.1, 415.9.7.2, 704.8.2, 706.1, 901.2, 901.3, 901.5, 901.6.2, 903.2.6.1, 903.2.11, Table 903.2.13, 903.5, 904.2.1, 905.1, 906.1, 907.2.5, 907.2.12.2, 907.2.14, 907.2.16, 907.19, 909.20, 910.2.3, Table 910.3, 1001.3, 1203.4.2, 1203.5, 2702.2.8, 2702.2.10, 2702.2.11, 2702.2.12, 2702.3, 3102.1, 3103.1, 3309.2, 3401.3, 3410.3.2, 3410.6.8.1, 3410.6.14, 3410.6.14.1~~
~~IFGC-06~~	~~International Fuel Gas Code®~~	~~101.4.2, 201.3, 415.7.3, 2113.11.1.2, 2113.15, 2801.1, 3401.3~~
~~IMC-06~~	~~International Mechanical Code®~~	~~101.4.3, 201.3, 307.9, 406.4.2, 406.6.3, 406.6.5, 409.3, 412.4.6, 414.1.2, 414.1.2.1, 414.1.2.2, 414.3, 415.7.1.4, 415.7.2, 415.7.2.8, 415.7.3, 415.7.4, 415.9.11.1, 416.3, 603.1, 707.2, 716.2.2, 716.5.4, 716.6.1, 716.6.2, 716.6.3, 717.5, 719.1, 903.2.12.1, 904.2.1, 904.11, 908.6, 909.1, 909.10.2, 1014.5, 1016.4.1, 1203.1, 1203.2.1, 1203.4.2, 1203.4.2.1, 1203.5, 1209.3, 2304.5, 3004.3.1, 3410.6.7.1, 3410.6.8~~
~~IPC-06~~	~~International Plumbing Code®~~	~~101.4.4,201.3, 415.7.4, 717.5, 903.3.5, 1206.3.3, 1503.4, 1807.4.3, 2901.1, 2902.1.1, 3305.1, 3401.3,~~
~~IPMC-06~~	~~International Property Maintenance Code®~~	~~101.4.5, 102.6, 103.3, 3401.3, 3410.3.2.~~
~~IPSDC-06~~	~~International Private Sewage Disposal Code®~~	~~101.4.4, 2901.1, 3401.3~~
~~IRC-06~~	~~International Residential Code®~~	~~101.2, 308.3, 308.5 1706.1.1, 2308.1, 3401.3~~
~~IWUIC-06~~	~~International Wildland-Urban Interface Code™~~	~~Table 1505.1~~
SBCCI SSTD 10-99	Standard for Hurricane Resistant Residential Construction	1609.1.1, 2308.2.1
SBCCI SSTD 11-97	Test Standard for Determining Wind Resistance of Concrete or Clay Roof Tiles	1715.2.1, 1715.2.2

NOTE:
Authority cited: Health and Safety Code Sections 17040, 17921, 17922, 18300, 18865 and 19990; and Government Code Sections 12955.1 and 12955.1.1.
Reference: Health and Safety Code Sections 17000 through 17060, 17910 through 17990, 18620, 18630, 18640, 18670, 18690, 18691, 18873 through 18873.5 and 19960 through 19997; and Government Code Sections 12955.1 and 12955.1.1.

APPENDIX CHAPTER 1
ADMINISTRATION

(Note: Adopt only those sections listed in the Matrix Adoption Table.)

NOTE:
Authority cited: Health and Safety Code Sections 17040, 17921, 17922, 18300, 18865 and 19990; and Government Code Sections 12955.1 and 12955.1.1.
Reference: Health and Safety Code Sections 17000 through 17060, 17910 through 17990, 18620, 18630, 18640, 18670, 18690, 18691, 18873 through 18873.5 and 19960 through 19997; and Government Code Sections 12955.1 and 12955.1.1.

APPENDIX A
EMPLOYEE QUALIFICATIONS

(Note: This appendix is not adopted.)

NOTE:
Authority cited: Health and Safety Code Sections 17040, 17921, 17922, 18300, 18865 and 19990; and Government Code Sections 12955.1 and 12955.1.1.
Reference: Health and Safety Code Sections 17000 through 17060, 17910 through 17990, 18620, 18630, 18640, 18670, 18690, 18691, 18873 through 18873.5 and 19960 through 19997; and Government Code Sections 12955.1 and 12955.1.1.

APPENDIX B
BOARD OF APPEALS

(Note: This appendix is not adopted.)

NOTE:
Authority cited: Health and Safety Code Sections 17040, 17921, 17922, 18300, 18865 and 19990; and Government Code Sections 12955.1 and 12955.1.1.
Reference: Health and Safety Code Sections 17000 through 17060, 17910 through 17990, 18620, 18630, 18640, 18670, 18690, 18691, 18873 through 18873.5 and 19960 through 19997; and Government Code Sections 12955.1 and 12955.1.1.

APPENDIX C
GROUP U – AGRICULTURAL BUILDINGS

(Note: This appendix is not adopted.)

NOTE:
Authority cited: Health and Safety Code Sections 17040, 17921, 17922, 18300, 18865 and 19990; and Government Code Sections 12955.1 and 12955.1.1.
Reference: Health and Safety Code Sections 17000 through 17060, 17910 through 17990, 18620, 18630, 18640, 18670, 18690, 18691, 18873 through 18873.5 and 19960 through 19997; and Government Code Sections 12955.1 and 12955.1.1.

APPENDIX D
FIRE DISTRICTS

(Note: This appendix is not adopted.)

NOTE:
Authority cited: Health and Safety Code Sections 17040, 17921, 17922, 18300, 18865 and 19990; and Government Code Sections 12955.1 and 12955.1.1.
Reference: Health and Safety Code Sections 17000 through 17060, 17910 through 17990, 18620, 18630, 18640, 18670, 18690, 18691, 18873 through 18873.5 and 19960 through 19997; and Government Code Sections 12955.1 and 12955.1.1.

~~APPENDIX E~~
~~SUPPLEMENTARY ACCESSIBILITY REQUIREMENTS~~

(Note: This appendix to be removed from the California Building Code.)

NOTE:
Authority cited: Health and Safety Code Sections 17040, 17921, 17922, 18300, 18865 and 19990; and Government Code Sections 12955.1 and 12955.1.1.
Reference: Health and Safety Code Sections 17000 through 17060, 17910 through 17990, 18620, 18630, 18640, 18670, 18690, 18691, 18873 through 18873.5 and 19960 through 19997; and Government Code Sections 12955.1 and 12955.1.1.

APPENDIX E
SUPPLEMENTARY ACCESSIBILITY REQUIREMENTS

(Note: This appendix is not adopted.)

NOTE:
Authority: Health and Safety Code Sections 17040, 17921, 17922, 18300, 18865 and 19990; and Government Code Sections 12955.1 and 12955.1.1.
Reference: Health and Safety Code Sections 17000 through 17060, 17910 through 17990, 18620, 18630, 18640, 18670, 18690, 18691, 18873 through 18873.5 and 19960 through 19997; and Government Code Sections 12955.1 and 12955.1.1.

APPENDIX F
RODENT PROOFING

(Note: This appendix is not adopted.)

NOTE:
Authority cited: Health and Safety Code Sections 17040, 17921, 17922, 18300, 18865 and 19990; and Government Code Sections 12955.1 and 12955.1.1.
Reference: Health and Safety Code Sections 17000 through 17060, 17910 through 17990, 18620, 18630, 18640, 18670, 18690, 18691, 18873 through 18873.5 and 19960 through 19997; and Government Code Sections 12955.1 and 12955.1.1.

APPENDIX G
FLOOD RESISTANT CONSTRUCTION

(Note: This appendix is not adopted.)

NOTE:
Authority cited: Health and Safety Code Sections 17040, 17921, 17922, 18300, 18865 and 19990; and Government Code Sections 12955.1 and 12955.1.1.
Reference: Health and Safety Code Sections 17000 through 17060, 17910 through 17990, 18620, 18630, 18640, 18670, 18690, 18691, 18873 through 18873.5 and 19960 through 19997; and Government Code Sections 12955.1 and 12955.1.1.

APPENDIX H
SIGNS

(Note: This appendix is not adopted.)

NOTE:
Authority cited: Health and Safety Code Sections 17040, 17921, 17922, 18300, 18865 and 19990; and Government Code Sections 12955.1 and 12955.1.1.
Reference: Health and Safety Code Sections 17000 through 17060, 17910 through 17990, 18620, 18630, 18640, 18670, 18690, 18691, 18873 through 18873.5 and 19960 through 19997; and Government Code Sections 12955.1 and 12955.1.1.

APPENDIX I
PATIO COVERS

(Note: Adopt entire IBC appendix without amendments for HCD 1 only.)

NOTE:
Authority cited: Health and Safety Code Sections 17040, 17921, 17922, 18300, 18865 and 19990; and Government Code Sections 12955.1 and 12955.1.1.
Reference: Health and Safety Code Sections 17000 through 17060, 17910 through 17990, 18620, 18630, 18640, 18670, 18690, 18691, 18873 through 18873.5 and 19960 through 19997; and Government Code Sections 12955.1 and 12955.1.1.

APPENDIX J
GRADING

(Note: Adopt entire appendix for HCD 1 only.)

NOTE:
Authority cited: Health and Safety Code Sections 17040, 17921, 17922, 18300, 18865 and 19990; and Government Code Sections 12955.1 and 12955.1.1.
Reference: Health and Safety Code Sections 17000 through 17060, 17910 through 17990, 18620, 18630, 18640, 18670, 18690, 18691, 18873 through 18873.5 and 19960 through 19997; and Government Code Sections 12955.1 and 12955.1.1.

APPENDIX K
ICC ELECTRICAL CODE

(Note: This appendix is not adopted.)

NOTE:
Authority cited: Health and Safety Code Sections 17040, 17921, 17922, 18300, 18865 and 19990; and Government Code Sections 12955.1 and 12955.1.1.
Reference: Health and Safety Code Sections 17000 through 17060, 17910 through 17990, 18620, 18630, 18640, 18670, 18690, 18691, 18873 through 18873.5 and 19960 through 19997; and Government Code Sections 12955.1 and 12955.1.1.

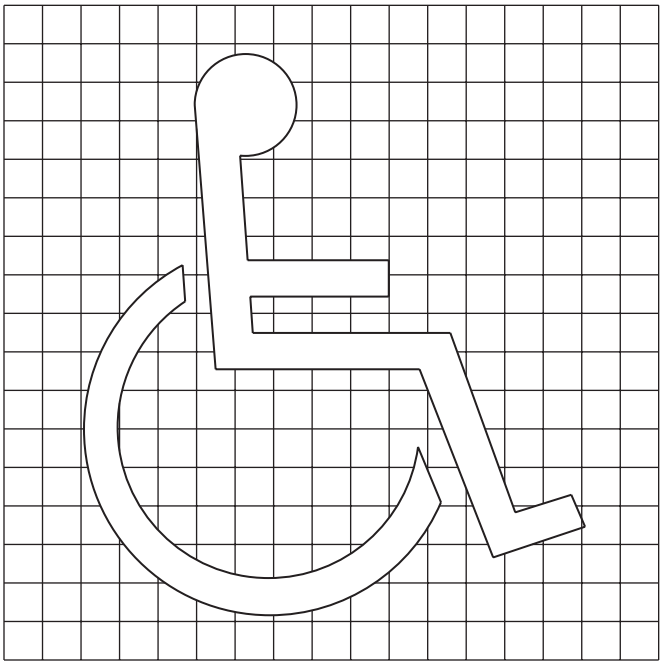

(a) SYMBOL PROPORTIONS

(b) DISPLAY CONDITIONS

THESE DIAGRAMS ILLUSTRATE THE SPECIFIC REQUIREMENTS OF THESE REGULATIONS AND ARE INTENDED ONLY AS AN AID FOR BUILDING DESIGN AND CONSTRUCTION.

FIGURE 11A-1A—INTERNATIONAL ACCESSIBILITY SYMBOL

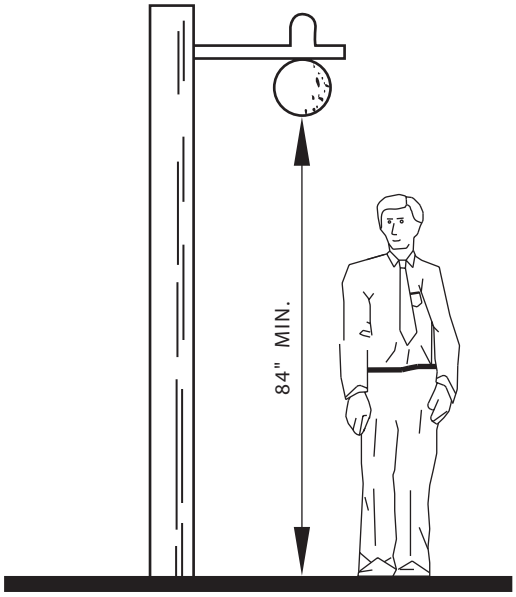

THIS DIAGRAM ILLUSTRATES THE SPECIFIC REQUIREMENTS OF THESE REGULATIONS AND IS INTENDED ONLY AS AN AID FOR BUILDING DESIGN AND CONSTRUCTION.

FIGURE 11A-1B—OVERHANGING OBSTRUCTION

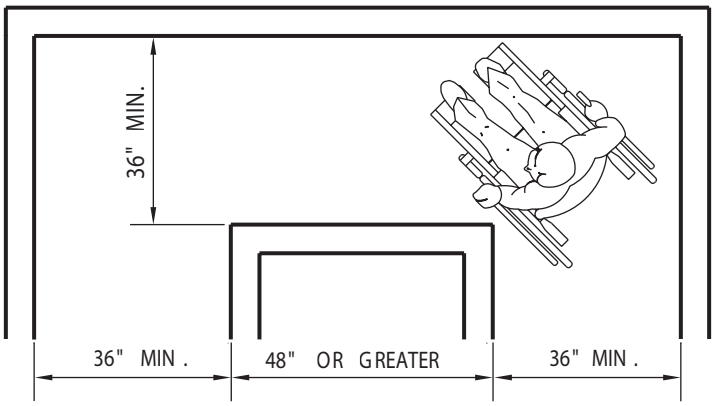

(a) 90° TURN

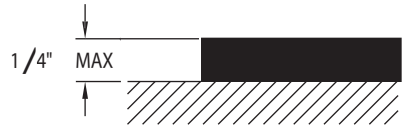

(c) CHANGE IN LEVEL

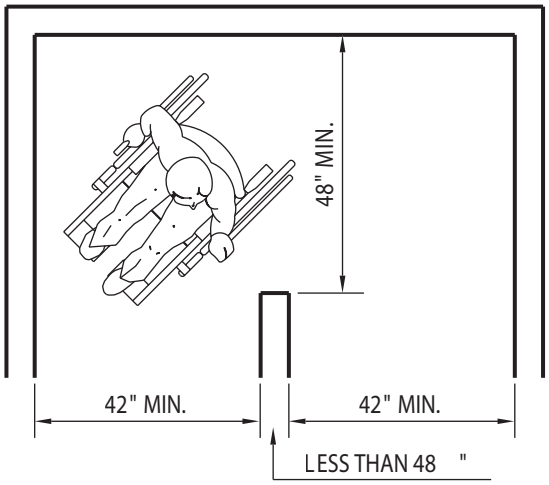

(d) TURNS AROUND AN OBSTRUCTION

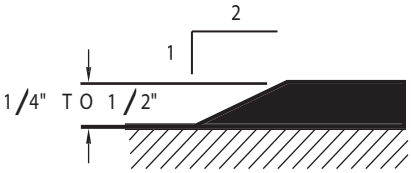

(d) CHANGE IN LEVEL

THESE DIAGRAMS ILLUSTRATE THE SPECIFIC REQUIREMENTS OF THESE REGULATIONS AND ARE INTENDED ONLY AS AN AID FOR BUILDING DESIGN AND CONSTRUCTION

FIGURE 11A-1C—WIDTH OF ACCESSIBLE ROUTE

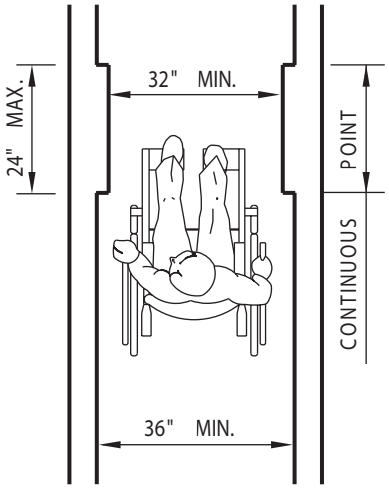

FIGURE 11A-1E—MINIMUM CLEAR WIDTH FOR SINGLE WHEELCHAIR

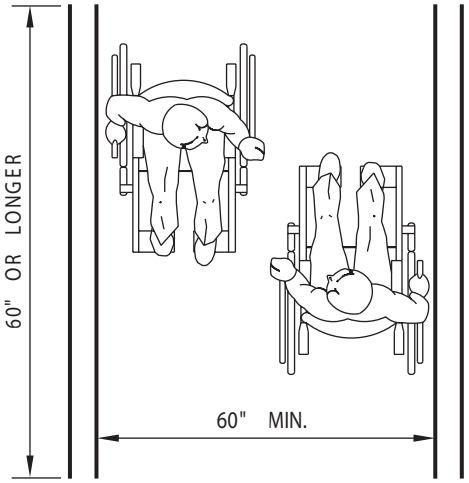

FIGURE 11A-1F—MINIMUM CLEAR WIDTH FOR TWO WHEELCHAIRS

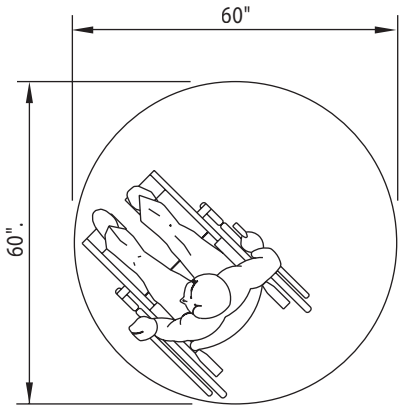

(a) 60 INCHES DIAMETER SPACE

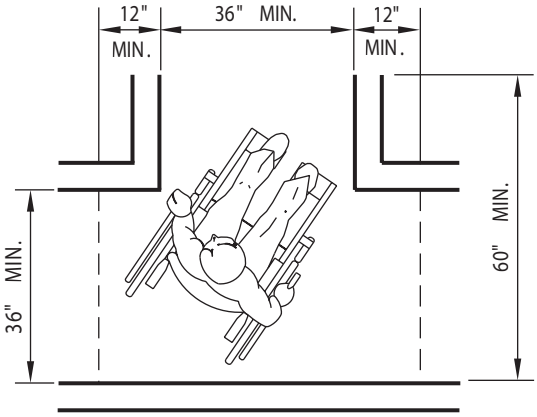

(b) T–SHAPED SPACE FOR 180° TURNS

THESE DIAGRAMS ILLUSTRATE THE SPECIFIC REQUIREMENTS OF THESE REGULATIONS AND ARE INTENDED ONLY AS AN AID FOR BUILDING DESIGN AND CONSTRUCTION.

FIGURE 11A-1D—WHEELCHAIR TURNING SPACE

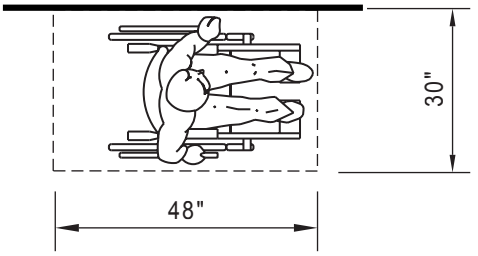

PARALLEL APPROACH

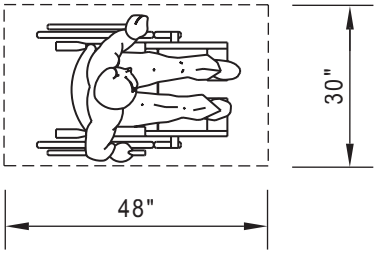

CLEAR FLOOR SPACE

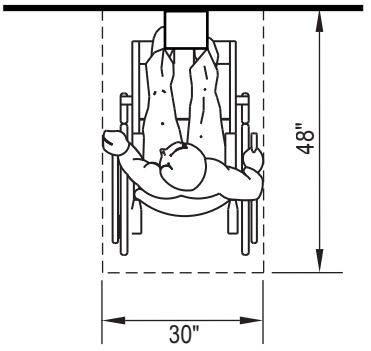

FORWARD APPROACH

THESE DIAGRAMS ILLUSTRATE THE SPECIFIC REQUIREMENTS OF THESE REGULATIONS AND ARE INTENDED ONLY AS AN AID FOR BUILDING DESIGN AND CONSTRUCTION

FIGURE 11A-1G—MINIMUM CLEAR FLOOR SPACE FOR WHEELCHAIRS

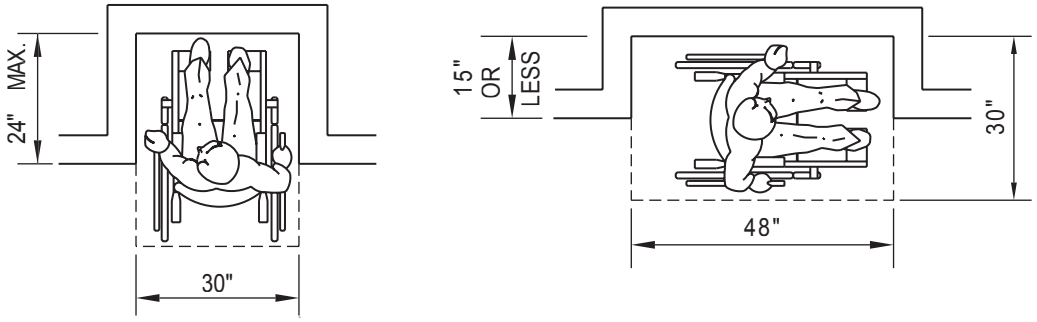

(a) CLEAR FLOOR SPACE IN ALCOVES

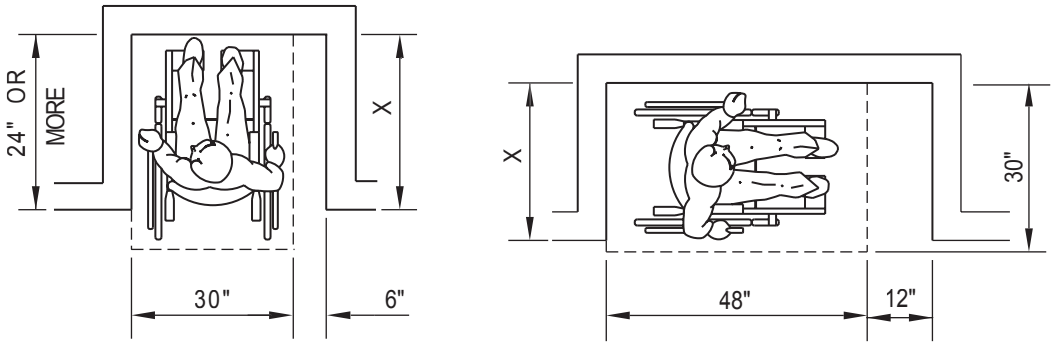

NOTE : IF X > 24 INCHES, THEN AN ADDITIONAL MANEUVERING CLEARANCE OF 6 INCHES SHALL BE PROVIDED AS SHOWN.

NOTE : IF X > 15 INCHES, THEN AN ADDITIONAL MANEUVERING CLEARANCE OF 12 INCHES SHALL BE PROVIDED AS SHOWN.

(b) ADDITIONAL MANEUVERING CLEARANCE FOR ALCOVES

THESE DIAGRAMS ILLUSTRATE THE SPECIFIC REQUIREMENTS OF THESE REGULATIONS AND ARE INTENDED ONLY AS AN AID FOR BUILDING DESIGN AND CONSTRUCTION

FIGURE 11A-1H—MINIMUM CLEAR FLOOR SPACE FOR WHEELCHAIRS

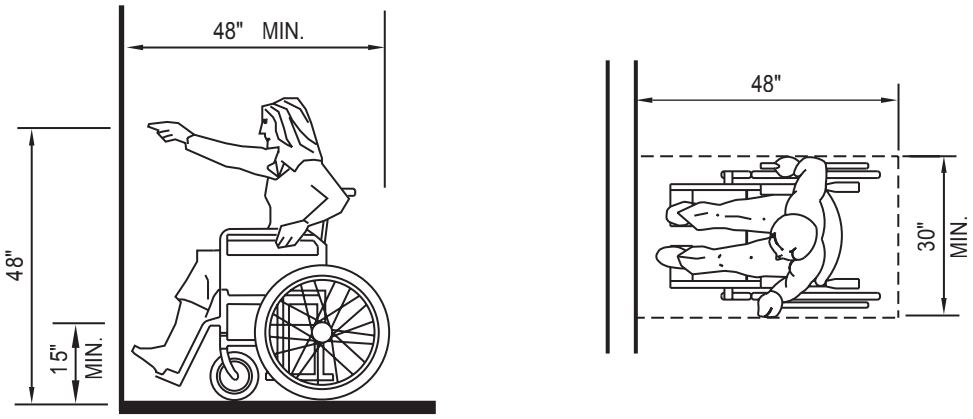

(a) HIGH FORWARD REACH LIMIT

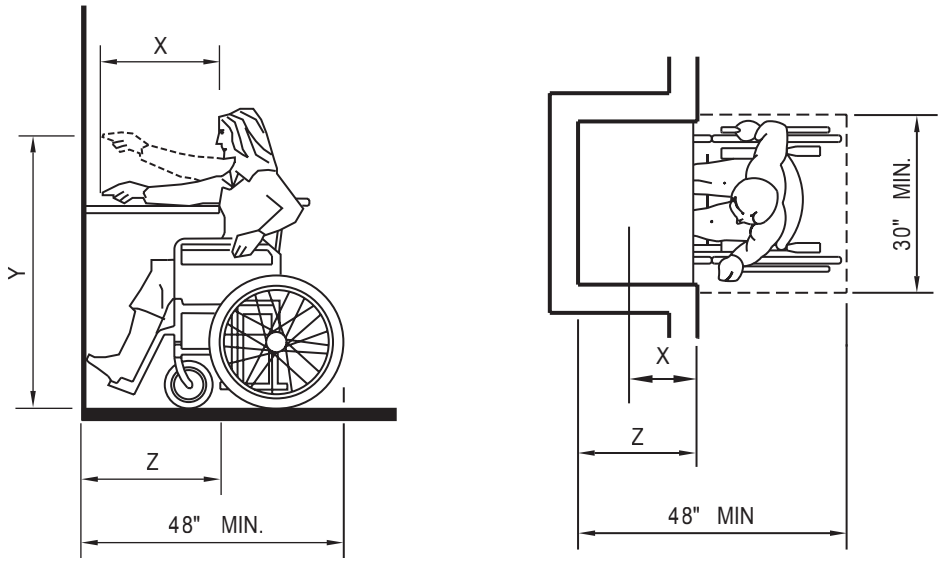

NOTE :
X SHALL BE LESS THAN OR EQUAL TO 25 INCHES Z SHALL BE GREATER THAN OR EQUAL TO X. WHEN X IS LESS THAN 20 INCHES, THEN Y SHALL BE 48 INCHES MAXIMUM. WHEN X IS 20 TO 25 INCHES, THEN Y SHALL BE 44 INCHES MAXIMUM.

(b) MAXIMUM FORWARD REACH OVER AN OBSTRUCTION

THESE DIAGRAMS ILLUSTRATE THE SPECIFIC REQUIREMENTS OF THESE REGULATIONS AND ARE INTENDED ONLY AS AN AID FOR BUILDING DESIGN AND CONSTRUCTION

FIGURE 11A-1I—FORWARD REACH

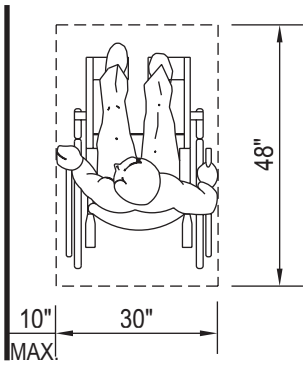

(a) CLEAR FLOOR SPACE PARALLEL APPROACH

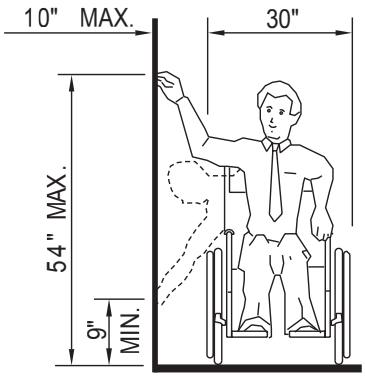

(b) HIGH AND LOW SIDE REACH LIMITS

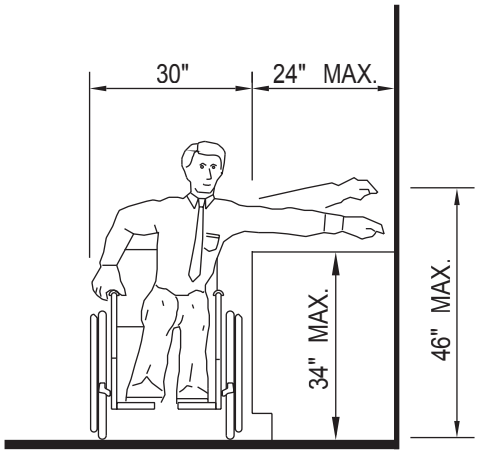

(c) MAXIMUM SIDE REACH OVER OBSTRUCTION

THESE DIAGRAMS ILLUSTRATE THE SPECIFIC REQUIREMENTS OF THESE REGULATIONS AND ARE INTENDED ONLY AS AN AID FOR BUILDING DESIGN AND CONSTRUCTION

FIGURE 11A-1J—SIDE REACH

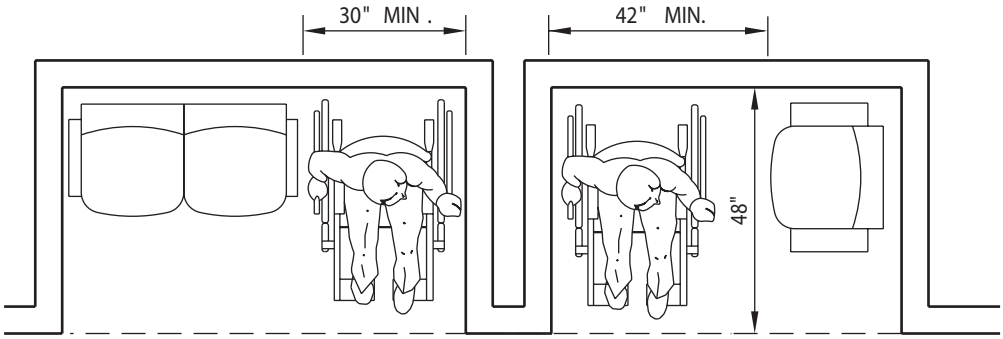

ACCESSIBLE PATH OF TRAVEL

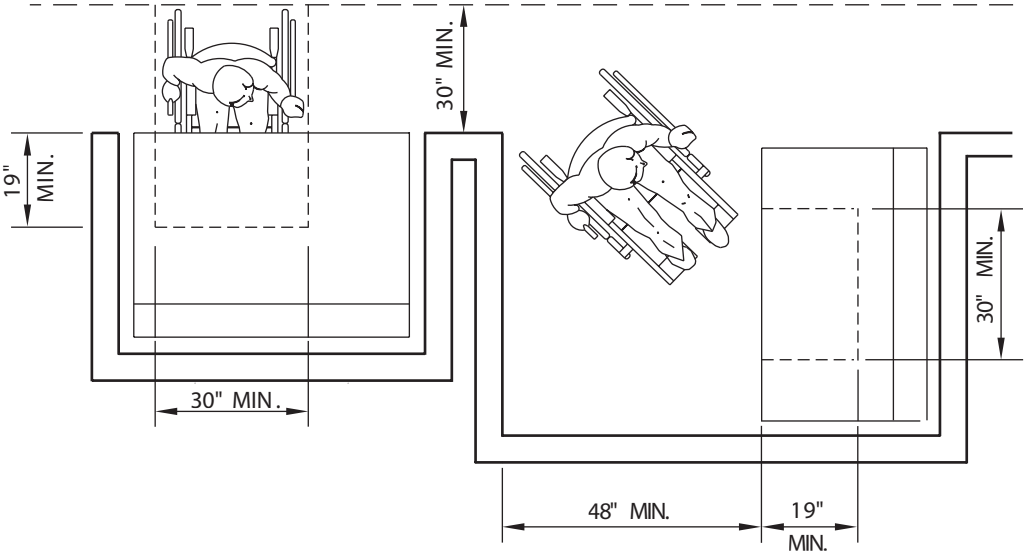

THESE DIAGRAMS ILLUSTRATE THE SPECIFIC REQUIREMENTS OF THESE REGULATIONS AND ARE INTENDED ONLY AS AN AID FOR BUILDING DESIGN AND CONSTRUCTION.

FIGURE 11A-1K—MINIMUM CLEARANCES FOR SEATING AND TABLE

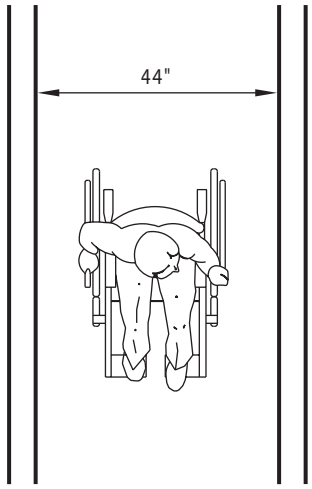

MINIMUM CORRIDOR WIDTH

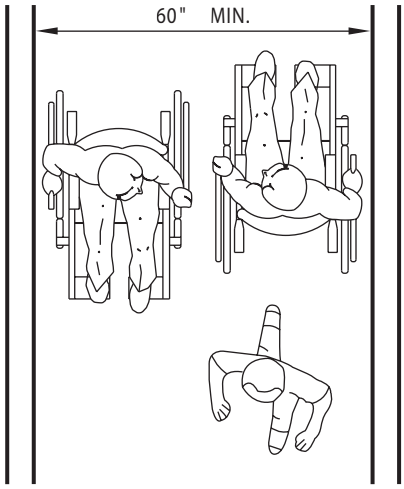

MINIMUM WIDTH FOR
CORRIDORS OVER 200

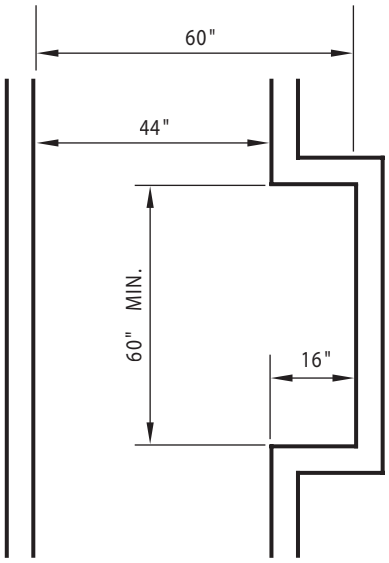

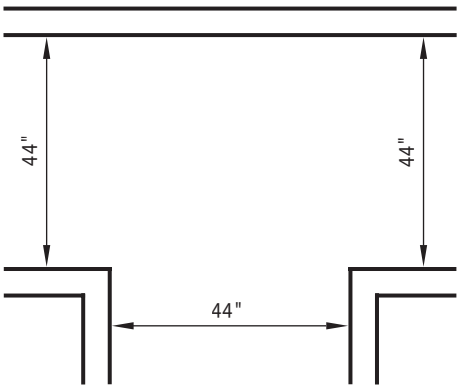

PASSING ALCOVES FOR CORRIDORS OVER
200' IN LIEU OF 60" MIN. WIDTH

THESE DIAGRAMS ILLUSTRATE THE SPECIFIC REQUIREMENTS OF THESE REGULATIONS AND ARE INTENDED ONLY AS AN AID FOR BUILDING DESIGN AND CONSTRUCTION.

FIGURE 11A-1L—CORRIDOR OVER 200 FEET (60 960 mm)

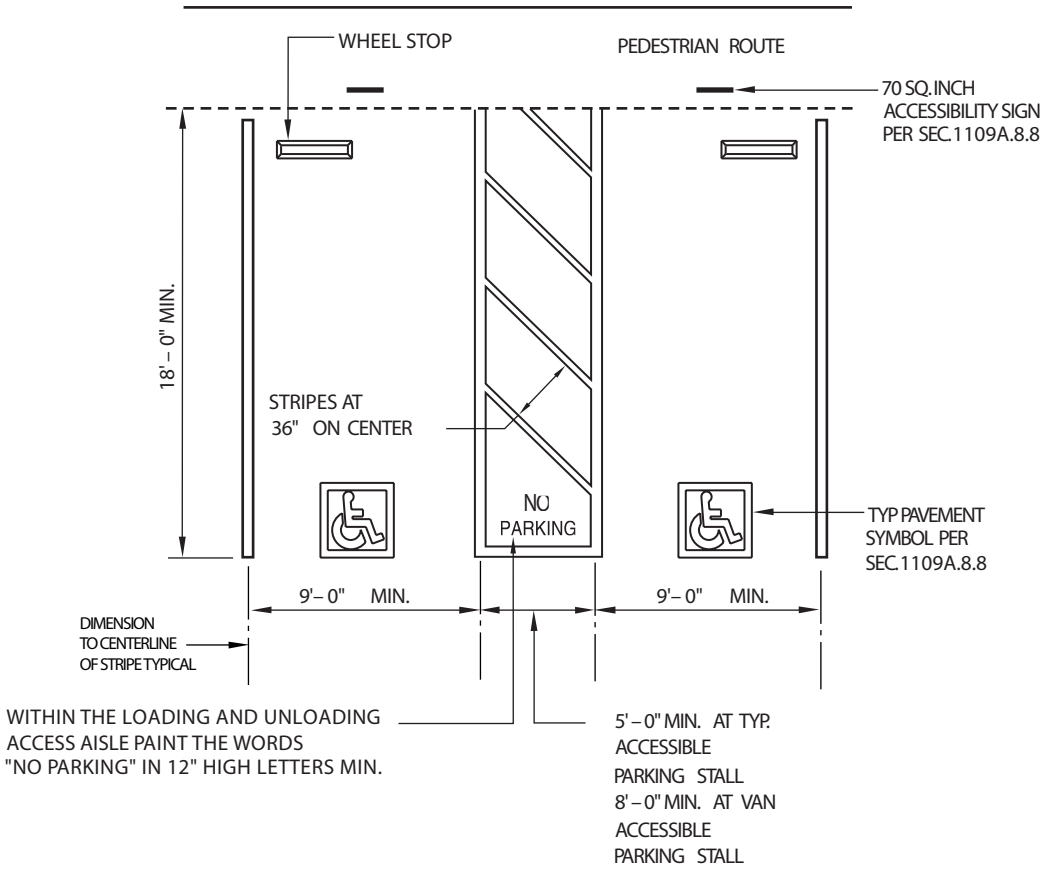

THIS DIAGRAM ILLUSTRATES THE SPECIFIC REQUIREMENTS OF THESE REGULATIONS AND IS INTENDED ONLY AS AN AID FOR BUILDING DESIGN AND CONSTRUCTION.

FIGURE 11A-2A—DOUBLE PARKING STALLS

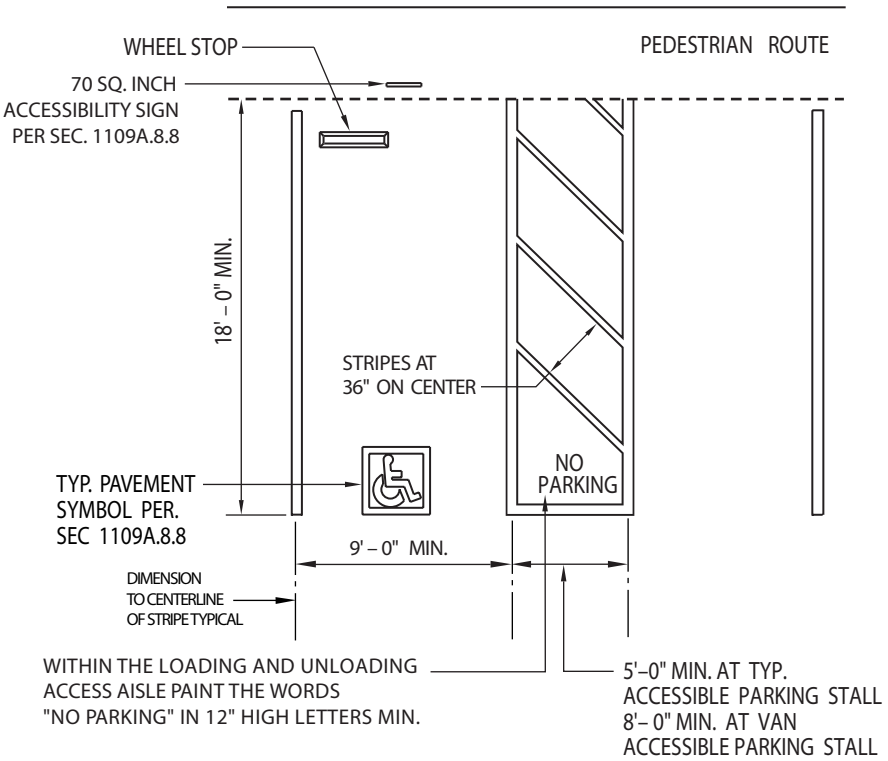

FIGURE 11A-2B—SINGLE PARKING STALLS

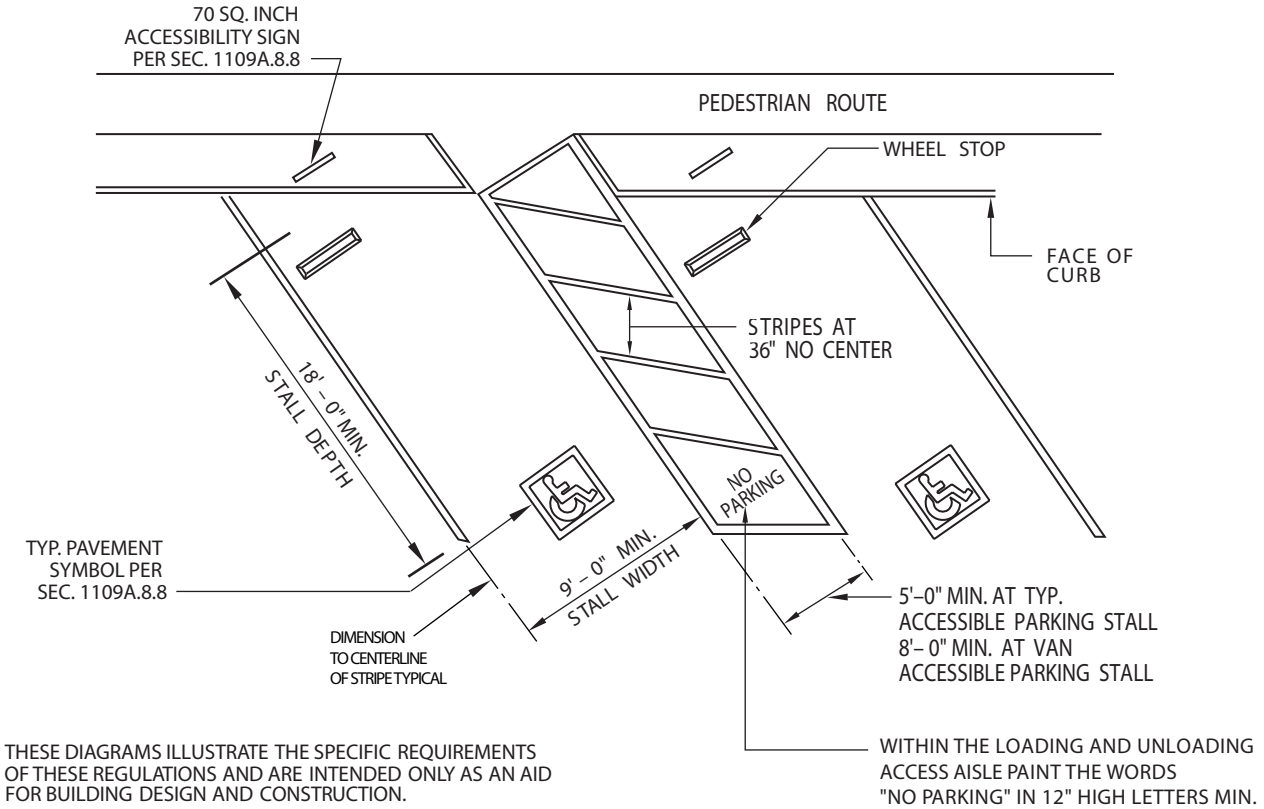

FIGURE 11A-2C—DIAGONAL PARKING STALLS

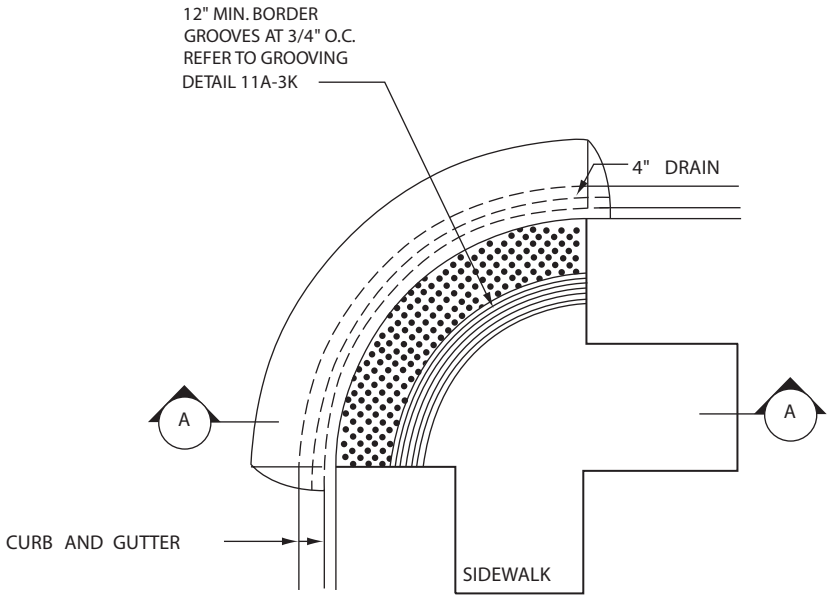

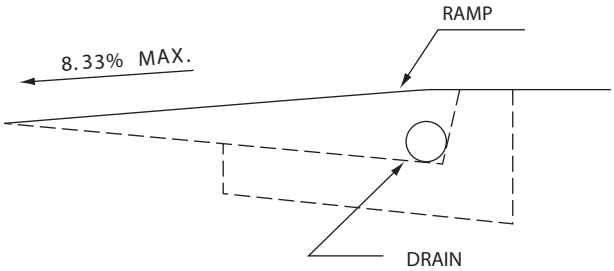

SECTION A–A

THESE DIAGRAMS ILLUSTRATE THE SPECIFIC REQUIREMENTS OF THESE REGULATIONS AND ARE INTENDED ONLY AS AN AID FOR BUILDING DESIGN AND CONSTRUCTION.

FIGURE 11A-3A—CURB DETAILS

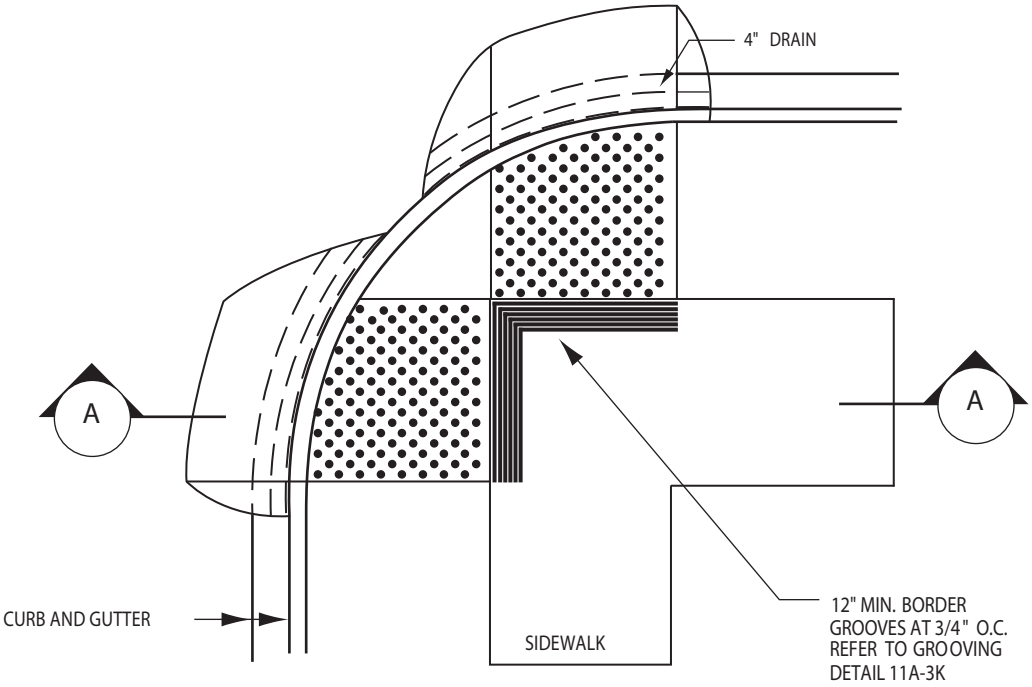

SEE FIGURE 11B-19A

THIS DIAGRAM ILLUSTRATES THE SPECIFIC REQUIREMENTS OF THESE REGULATIONS AND IS INTENDED ONLY AS AN AID FOR BUILDING DESIGN AND CONSTRUCTION.

FIGURE 11A-3B—CURB DETAIL

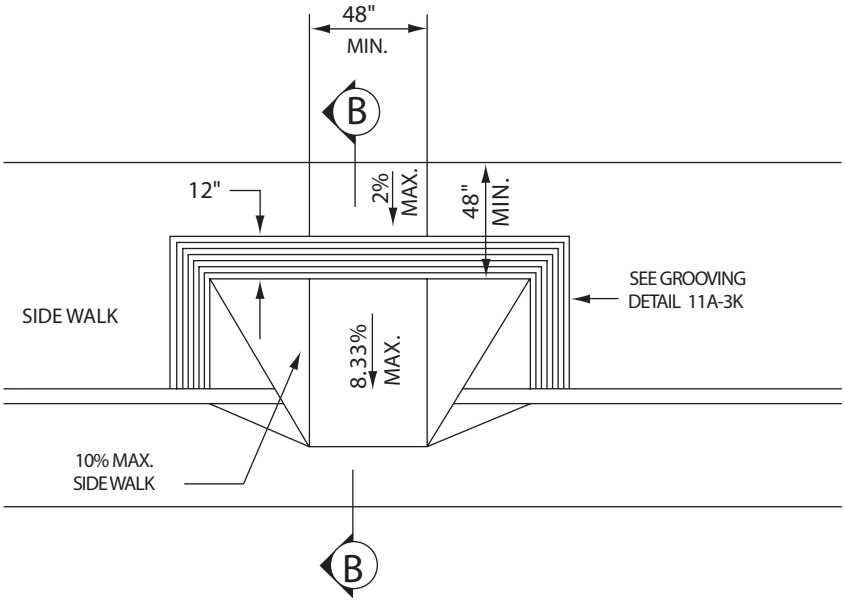

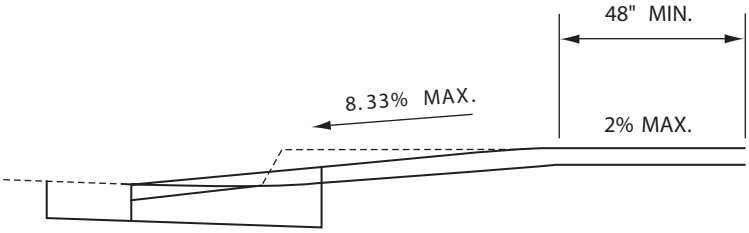

SECTION B–B

THESE DIAGRAMS ILLUSTRATE THE SPECIFIC REQUIREMENTS OF THESE REGULATIONS AND ARE INTENDED ONLY AS AN AID FOR BUILDING DESIGN AND CONSTRUCTION.

FIGURE 11A-3C—CURB DETAIL

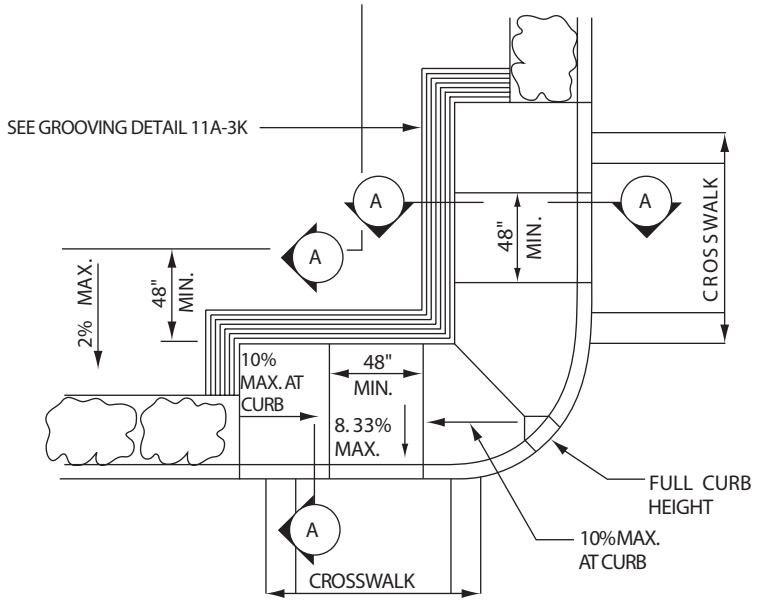

FIGURE 11A-3D—CURB DETAIL

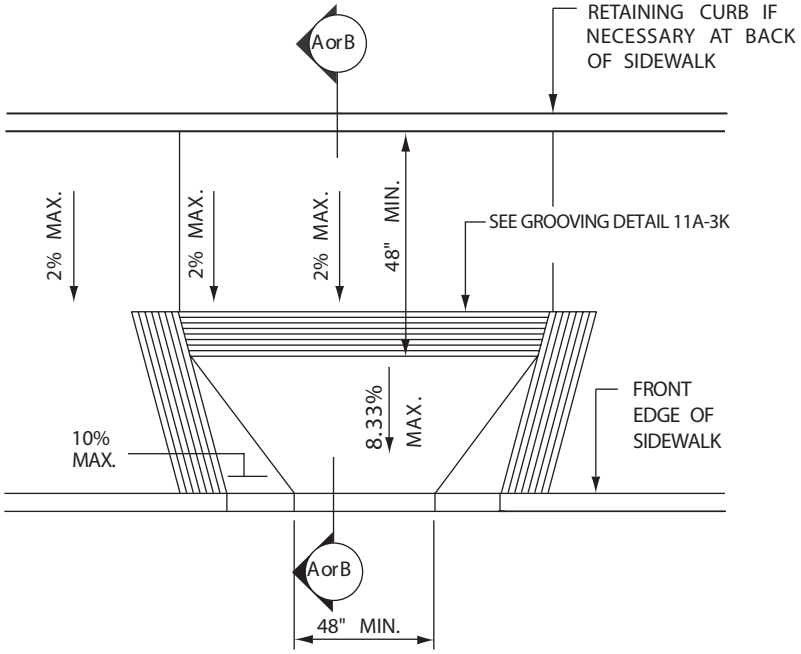

FIGURE 11A-3E—CURB DETAIL

THESE DIAGRAMS ILLUSTRATE THE SPECIFIC REQUIREMENTS OF THESE REGULATIONS AND ARE INTENDED ONLY AS AN AID FOR BUILDING DESIGN AND CONSTRUCTION.

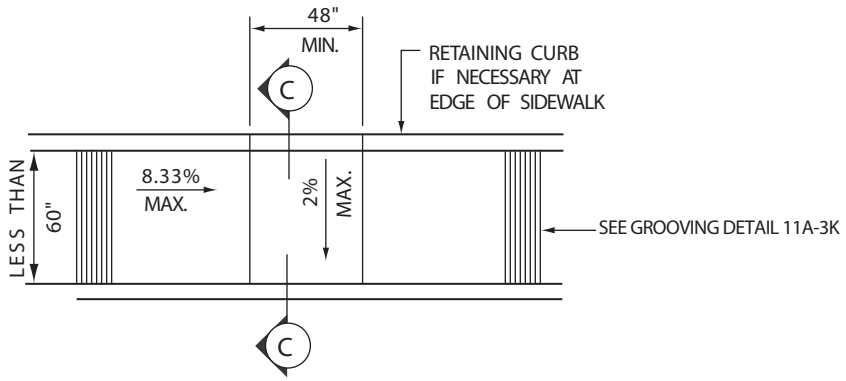

FIGURE 11A-3F—CURB DETAIL

SIDEWALK LESS THAN 60" WIDE

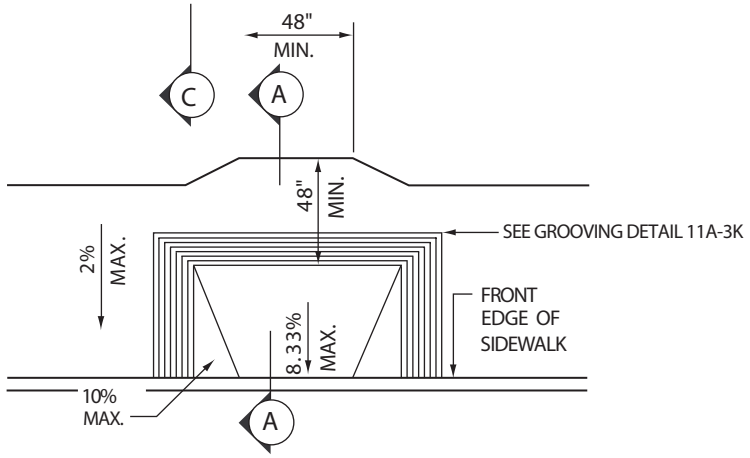

FIGURE 11B-3G—CURB DETAIL

THESE DIAGRAMS ILLUSTRATE THE SPECIFIC REQUIREMENTS OF THESE REGULATIONS AND ARE INTENDED ONLY AS AN AID FOR BUILDING DESIGN AND CONSTRUCTION.

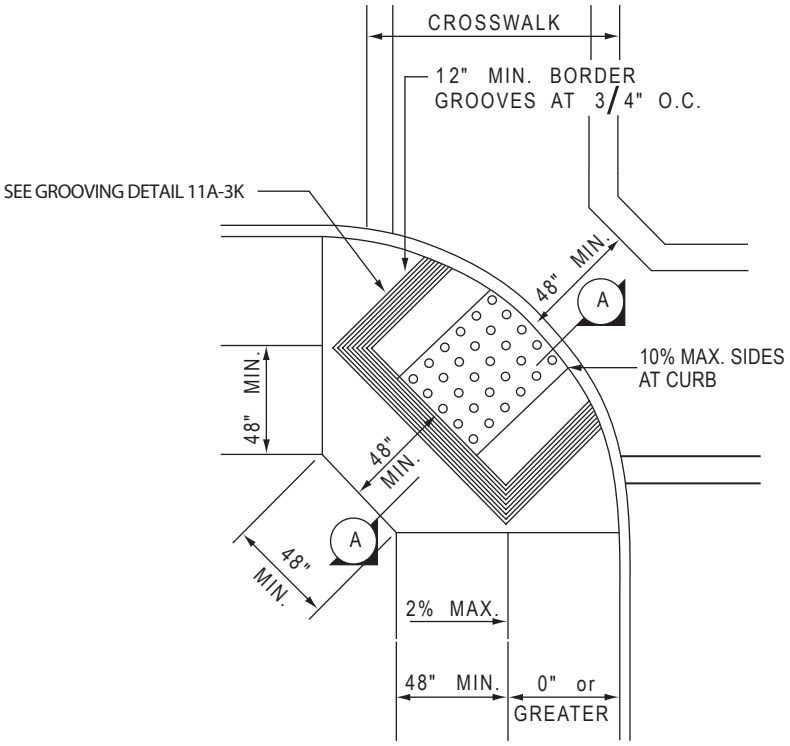

FIGURE 11A-3H—CURB DETAIL

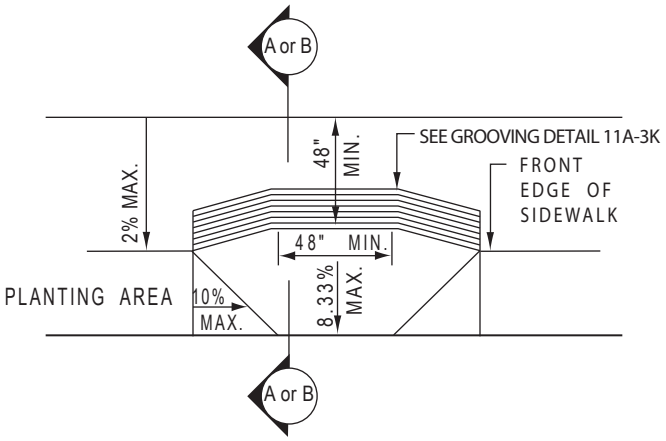

FIGURE 11A-3I—CURB DETAIL

THESE DIAGRAMS ILLUSTRATE THE SPECIFIC REQUIREMENTS OF THESE REGULATIONS AND ARE INTENDED ONLY AS AN AID FOR BUILDING DESIGN AND CONSTRUCTION.

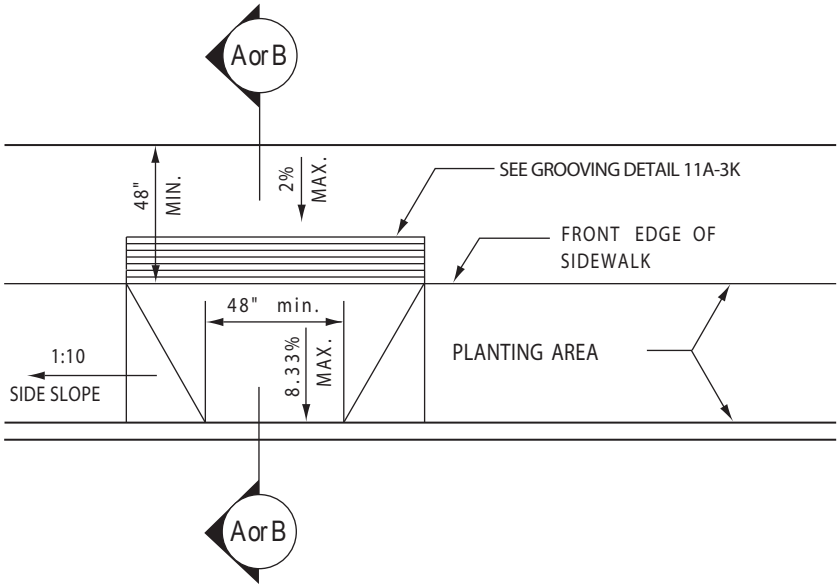

FIGURE 11A-3J—CURB DETAIL

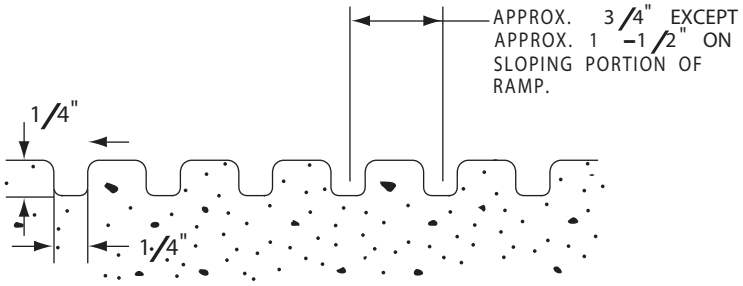

GROOVING DETAIL

FIGURE 11A-3K—CURB DETAIL

THESE DIAGRAMS ILLUSTRATE THE SPECIFIC REQUIREMENTS OF THESE REGULATIONS AND ARE INTENDED ONLY AS AN AID FOR BUILDING DESIGN AND CONSTRUCTION.

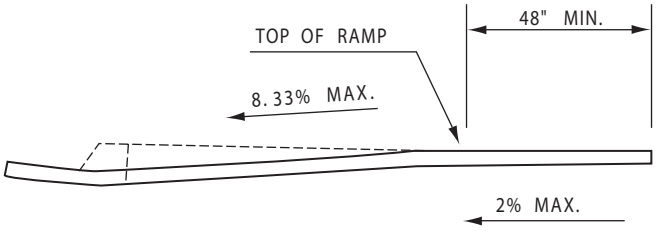

SECTION A–A

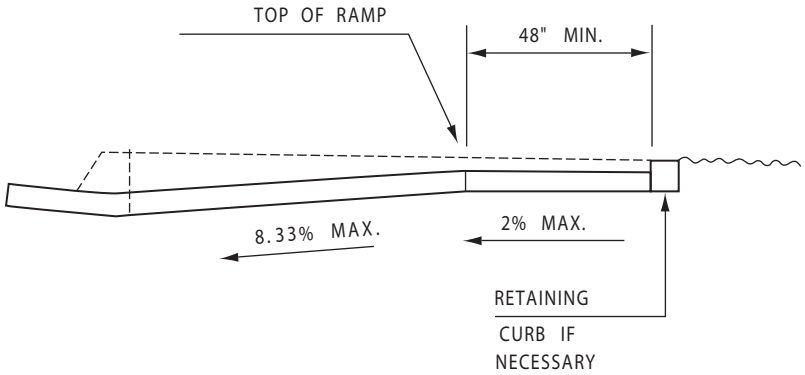

SECTION B–B

DEPRESS ENTIRE SIDEWALK AS REQUIRED

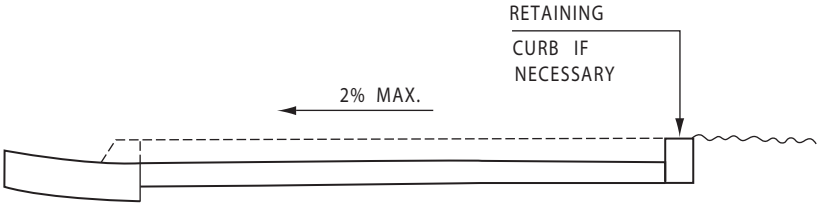

SECTION C–C

THESE DIAGRAMS ILLUSTRATE THE SPECIFIC REQUIREMENTS OF THESE REGULATIONS AND ARE INTENDED ONLY AS AN AID FOR BUILDING DESIGN AND CONSTRUCTION.

FIGURE 11A-3L—CURB SECTIONS

FIGURE 11A-3M – RETURNED CURB STYLE (See Figure 11B-21)

FIGURE 11A-3N – TRUNCATED DOMES (See Figure 11B-23A)

FIGURE 11A-4 - (RESERVED)

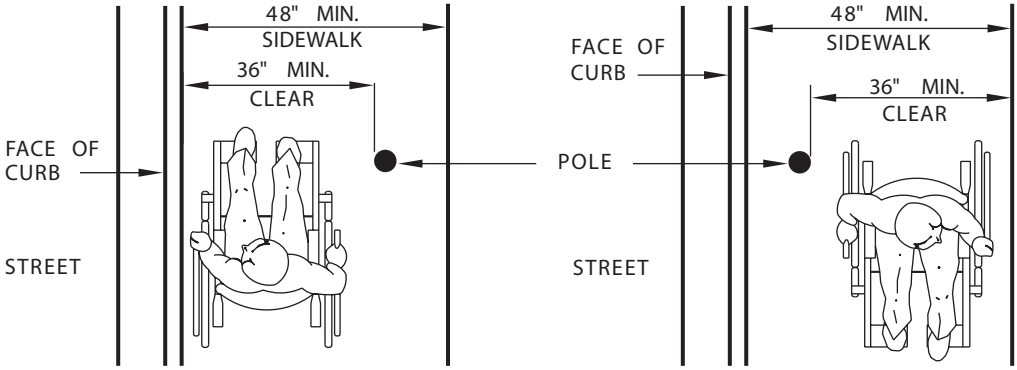

(a) SIDEWALK OBSTRUCTIONS

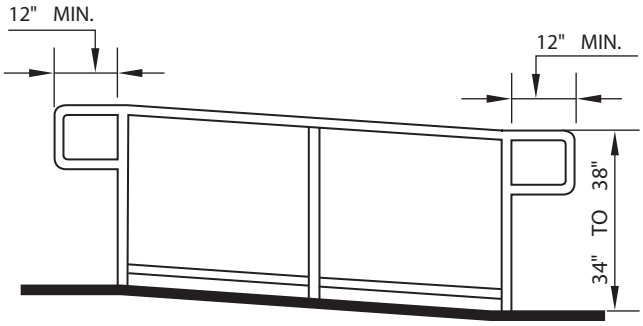

(b) GUIDE RAIL

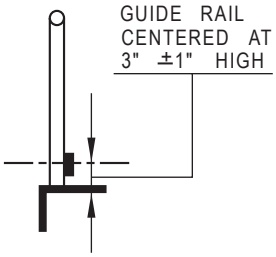

GUIDE RAIL DETAIL

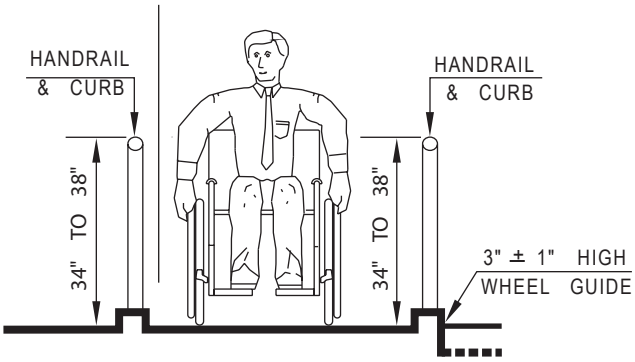

(c) WHEEL GUIDE

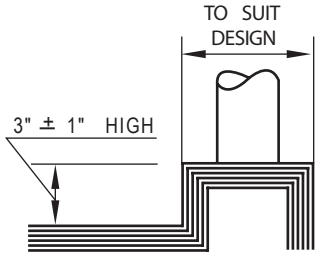

WHEEL GUIDE DETAIL

THESE DIAGRAMS ILLUSTRATE THE SPECIFIC REQUIREMENTS OF THESE REGULATIONS AND ARE INTENDED ONLY AS AN AID FOR BUILDING DESIGN AND CONSTRUCTION.

FIGURE 11A-5A—RAMPS AND SIDEWALKS

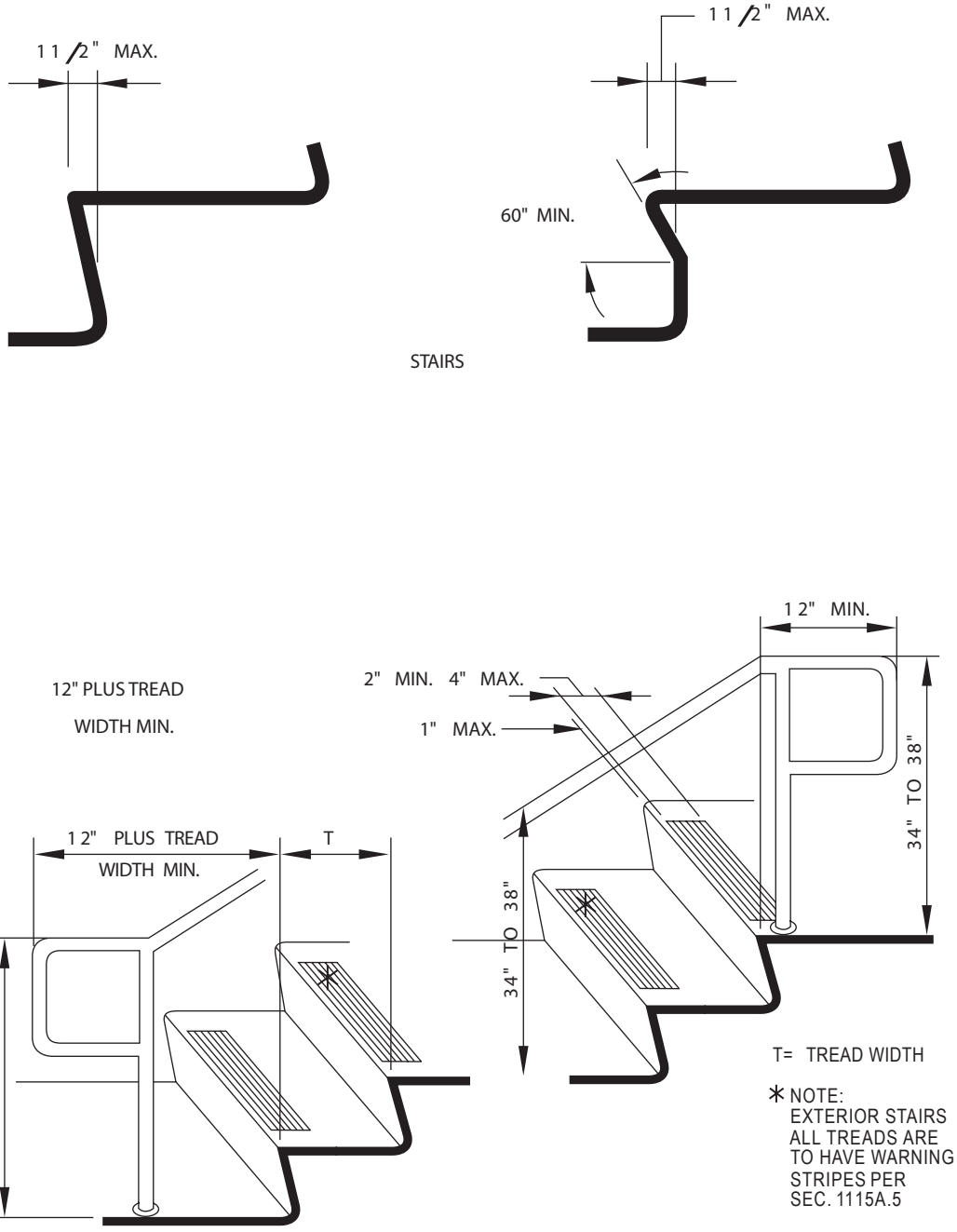

THESE DIAGRAMS ILLUSTRATE THE SPECIFIC REQUIREMENTS OF THESE REGULATIONS AND ARE INTENDED ONLY AS AN AID FOR BUILDING DESIGN AND CONSTRUCTION.

FIGURE 11A-6A—WARNING STRIPING AND HANDRAIL EXTENSIONS

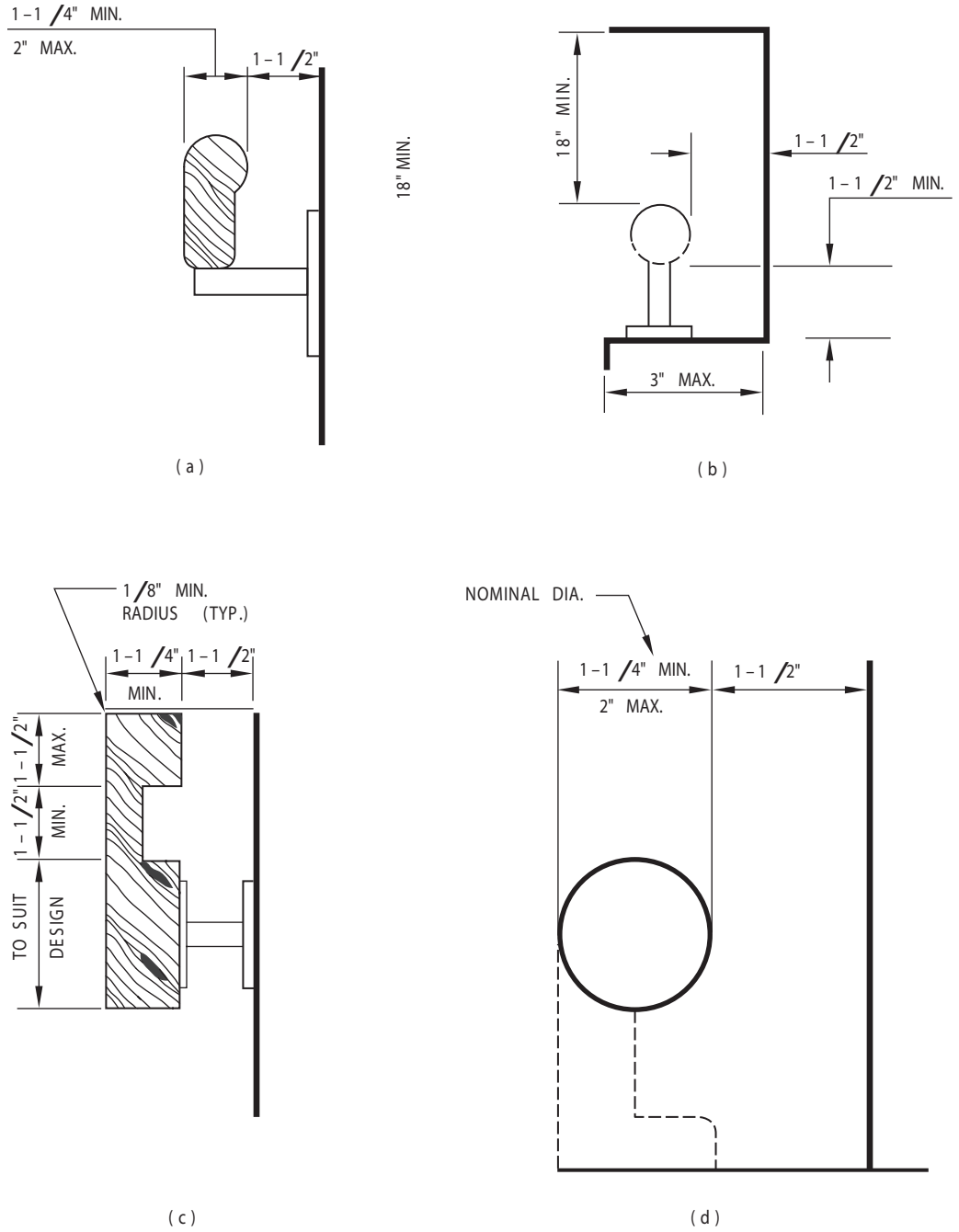

THESE DIAGRAMS ILLUSTRATE THE SPECIFIC REQUIREMENTS OF THESE REGULATIONS AND ARE INTENDED ONLY AS AN AID FOR BUILDING DESIGN AND CONSTRUCTION.

FIGURE 11A-6B—STAIR HANDRAILS

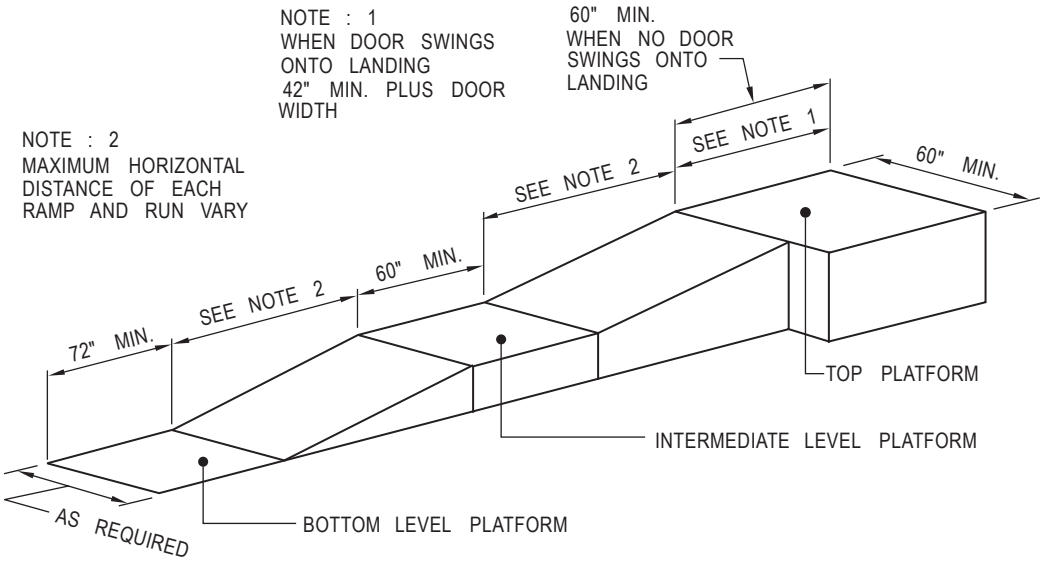

(a) STRAIGHT RAMP RUN

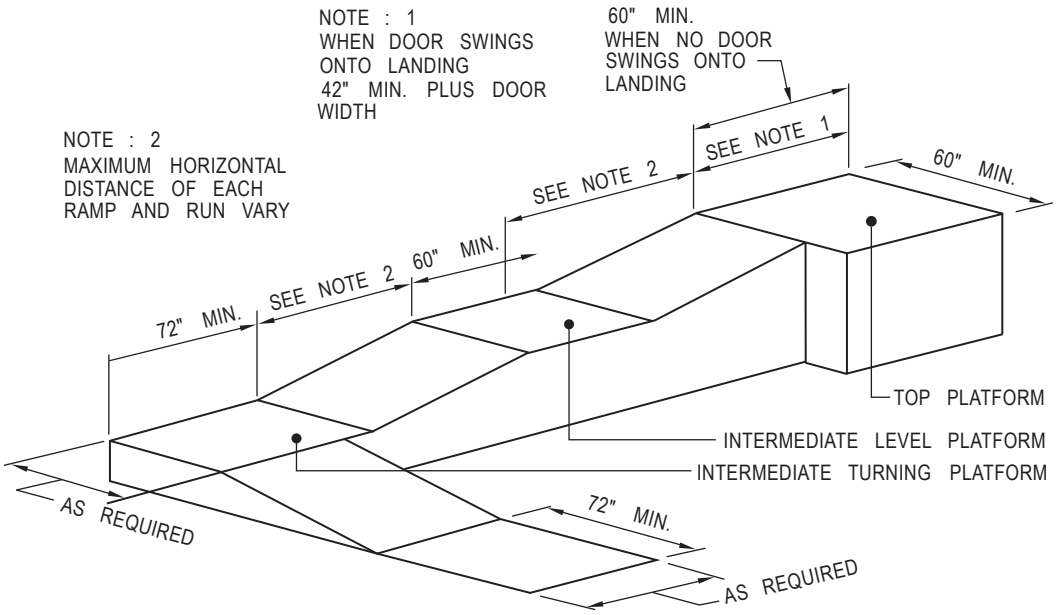

(b) RAMP WITH TURNING PLATFORM

THESE DIAGRAMS ILLUSTRATE THE SPECIFIC REQUIREMENTS OF THESE REGULATIONS AND ARE INTENDED ONLY AS AN AID FOR BUILDING DESIGN AND CONSTRUCTION.

FIGURE 11A-6C—RAMP DIMENSIONS

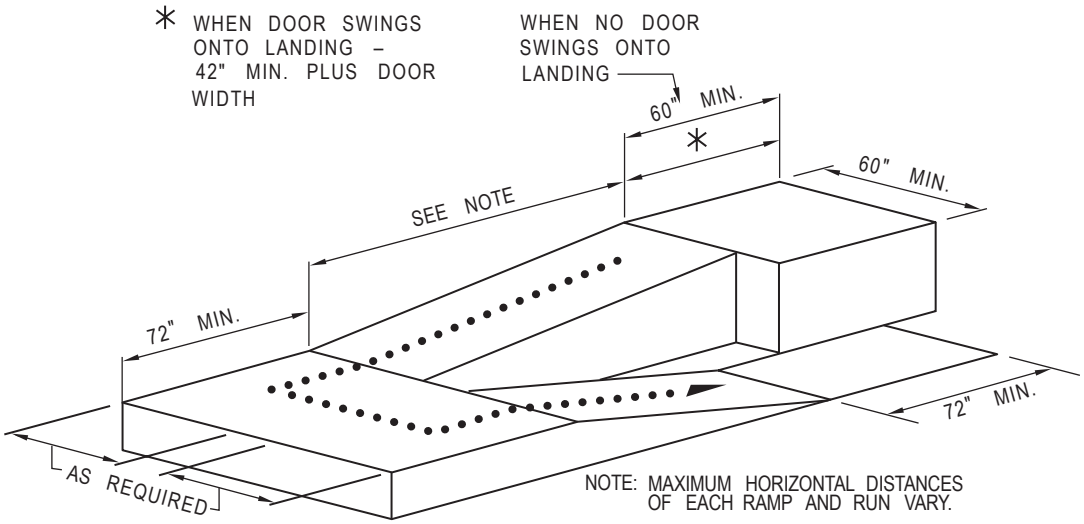

(a) RAMP WITH INTERMEDIATE SWITCH BACK PLATFORM

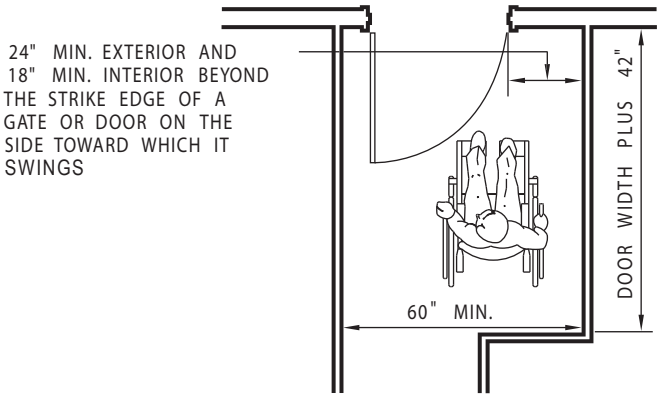

(b) RAMP LANDING AT DOORWAY

THESE DIAGRAMS ILLUSTRATE THE SPECIFIC REQUIREMENTS OF THESE REGULATIONS AND ARE INTENDED ONLY AS AN AID FOR BUILDING DESIGN AND CONSTRUCTION.

FIGURE 11A-6D—RAMP LANDING AND DOORWAY

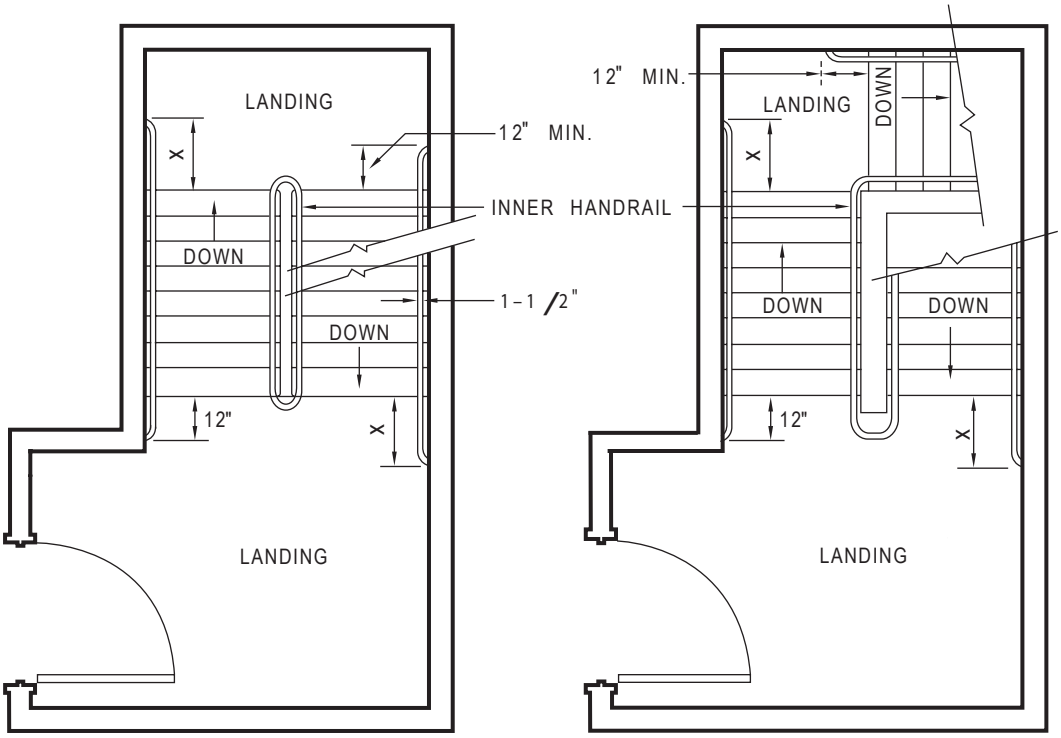

NOTE : INNER HANDRAIL AT LANDINGS OF STAIRS THAT DOUBLE BACK OR IMMEDIATELY TURN SHALL BE CONTINUOUS AND SHALL NOT EXTEND INTO LANDING OR PATH OF TRAVEL.

X : EXTENSION OF HANDRAIL SHALL BE EQUAL TO THE TREAD WIDTH PLUS 12 INCHES.

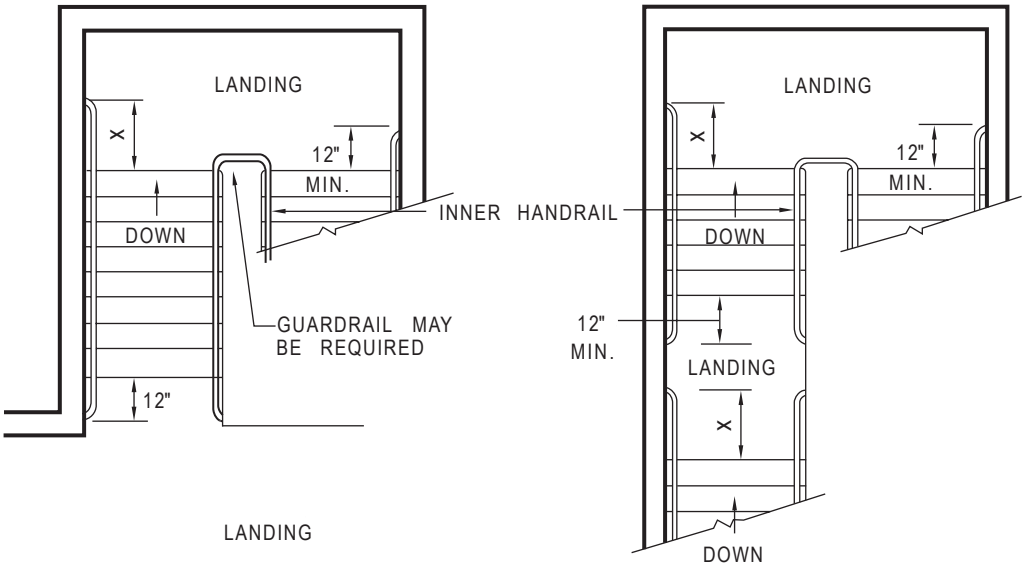

THESE DIAGRAMS ILLUSTRATE THE SPECIFIC REQUIREMENTS OF THESE REGULATIONS AND ARE INTENDED ONLY AS AN AID FOR BUILDING DESIGN AND CONSTRUCTION.

FIGURE 11A-6E—STAIR HANDRAILS

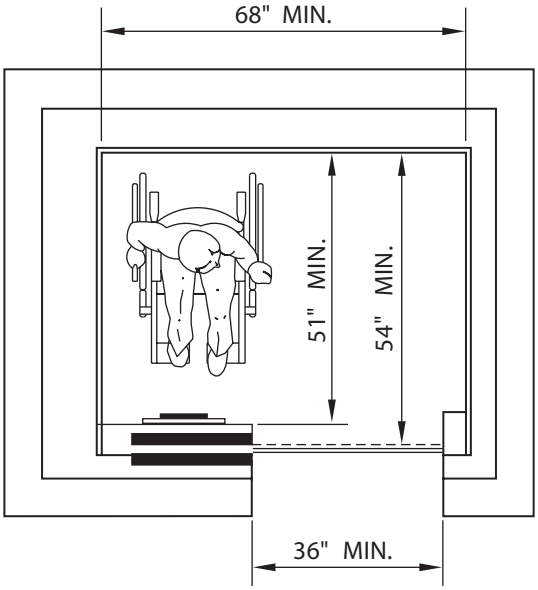

(a) SIDE OPENING DOOR

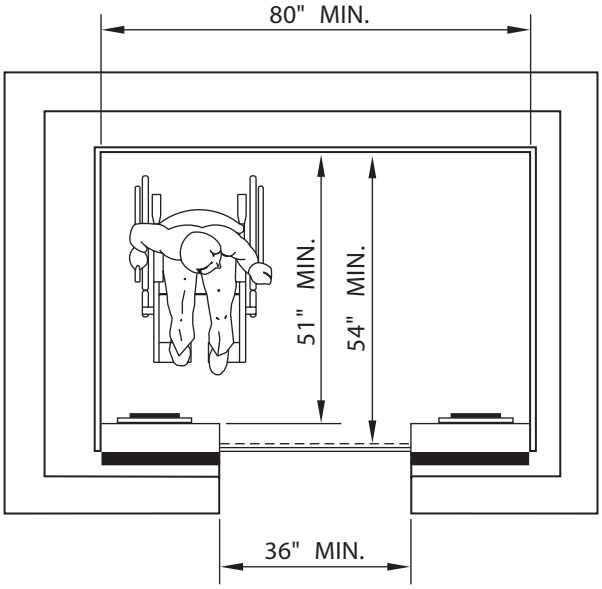

(b) CENTER OPENING DOOR

THIS DIAGRAM ILLUSTRATES THE SPECIFIC REQUIREMENTS OF THESE REGULATIONS AND IS INTENDED ONLY AS AN AID FOR BUILDING DESIGN AND CONSTRUCTION

FIGURE 11A-7A—MINIMUM DIMENSIONS OF ELEVATOR CARS

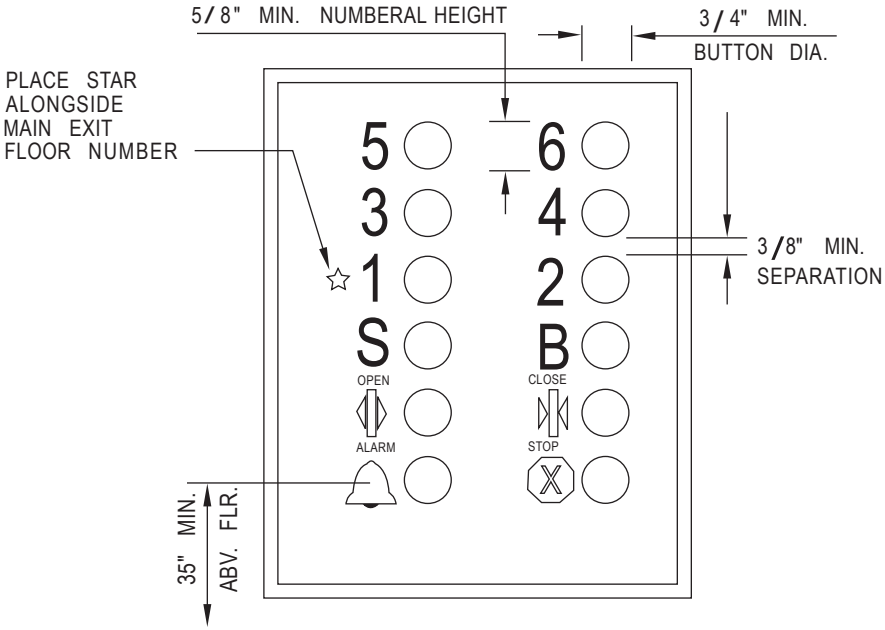

(a) ELEVATOR CONTROL PANEL DETAIL

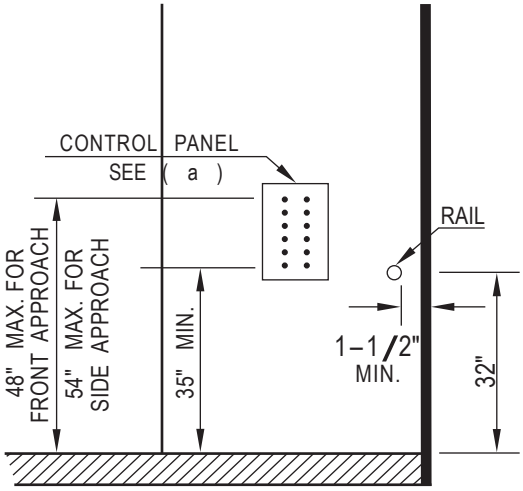

(b) MAXIMUM INSTALLATION HEIGHTS ABOVE CAB FLOOR

THIS DIAGRAM ILLUSTRATES THE SPECIFIC REQUIREMENTS OF THESE REGULATIONS AND IS INTENDED ONLY AS AN AID FOR BUILDING DESIGN AND CONSTRUCTION.

FIGURE 11A-7B—ELEVATOR CONTROL PANEL

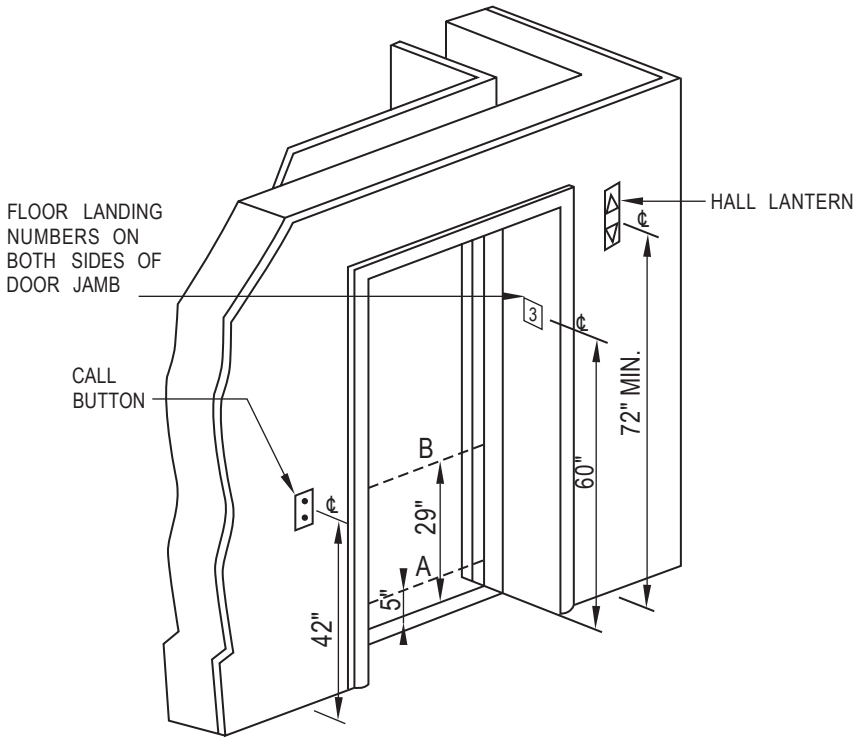

NOTE:
THE AUTOMATIC DOOR REOPENING DEVICE IS ACTIVATED IF AN OBJECT PASSES THROUGH EITHER LINE A OR LINE B. LINE A AND LINE B REPRESENT THE VERTICAL LOCATION OF THE DOOR REOPENING DEVICE NOT REQUIRING CONTACT.

FIGURE 11A-7C—HOISTWAY AND ELEVATOR ENTRANCES

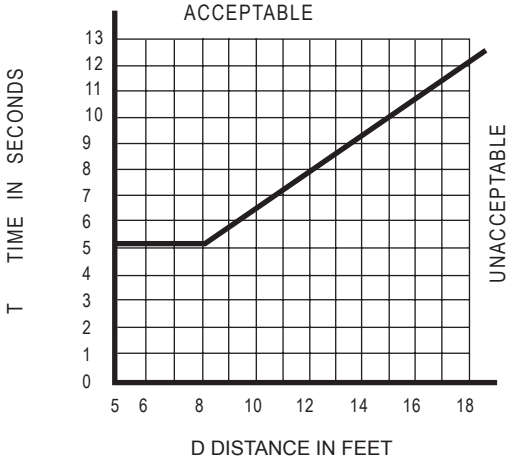

THIS DIAGRAM ILLUSTRATES THE SPECIFIC REQUIREMENTS OF THESE REGULATIONS AND IS INTENDED ONLY AS AN AID FOR BUILDING DESIGN AND CONSTRUCTION.

FIGURE 11A-7D—GRAPH OF TIMING EQUATION

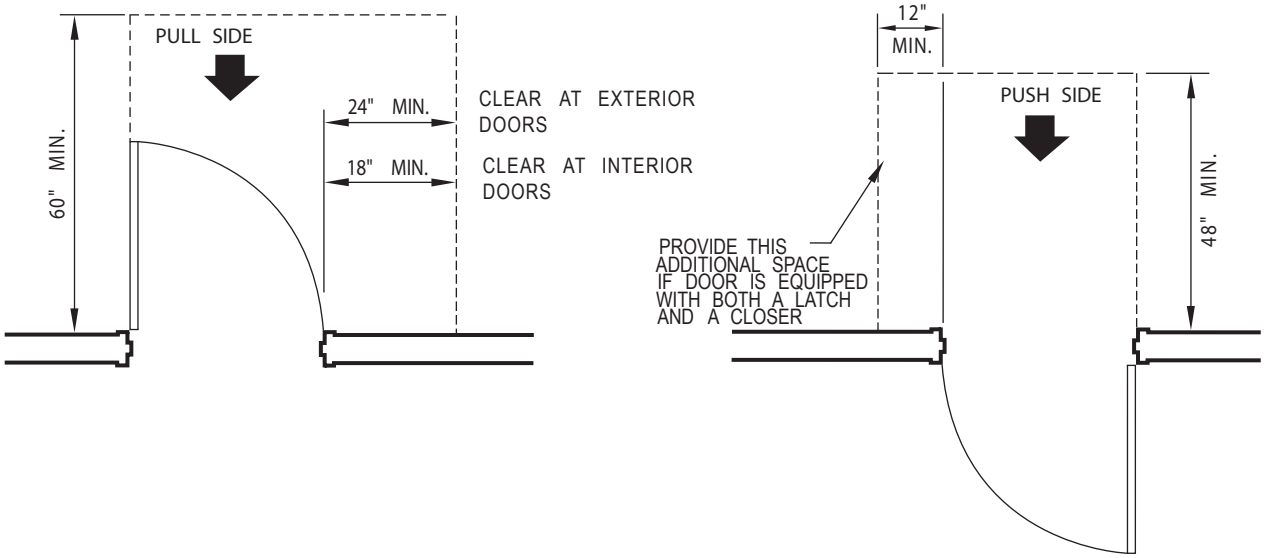

FIGURE 11A-8A—FRONT APPROACHES - SWINGING DOORS

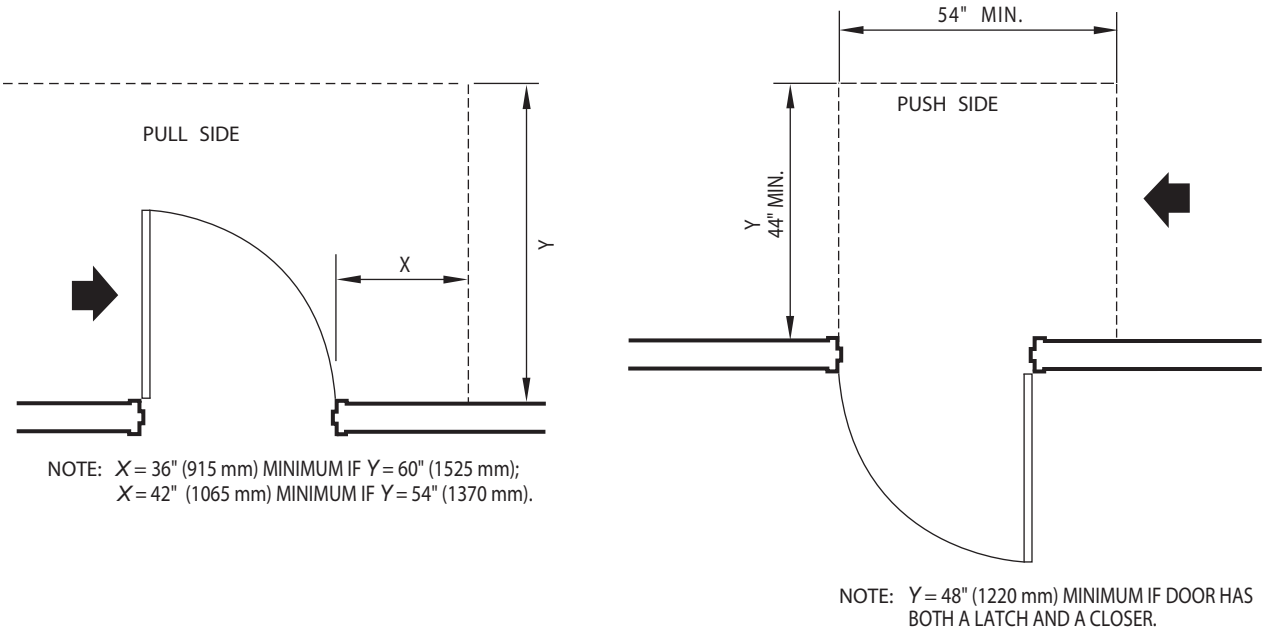

FIGURE 11A-8B—HINGE SIDE APPROACHES - SWINING DOORS

THESE DIAGRAMS ILLUSTRATE THE SPECIFIC REQUIREMENTS OF THESE REGULATIONS AND ARE INTENDED ONLY AS AN AID FOR BUILDING DESIGN AND CONSTRUCTION.

LEVEL MANEUVERING CLEARANCE AT DOORS

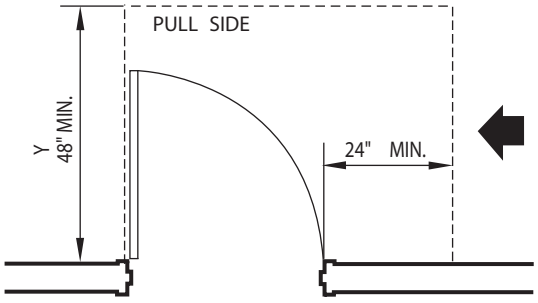

NOTE: Y = 54" (1370 mm) MINIMUM IF DOOR HAS A CLOSER.

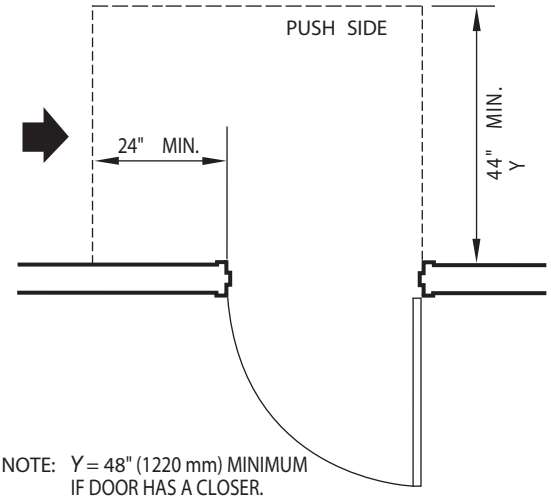

NOTE: Y = 48" (1220 mm) MINIMUM IF DOOR HAS A CLOSER.

FIGURE 11A-8C—LATCH SIDE APPROACHES - SWINGING DOORS

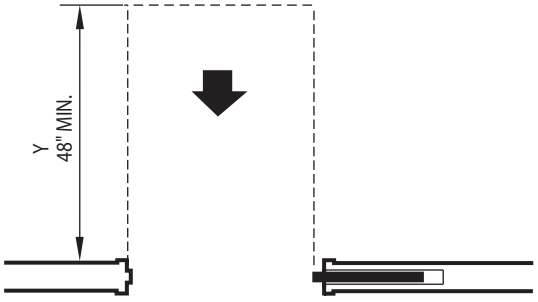

FIGURE 11A-8D—FRONT APPROACH - SLIDING DOORS AND FOLDING DOORS

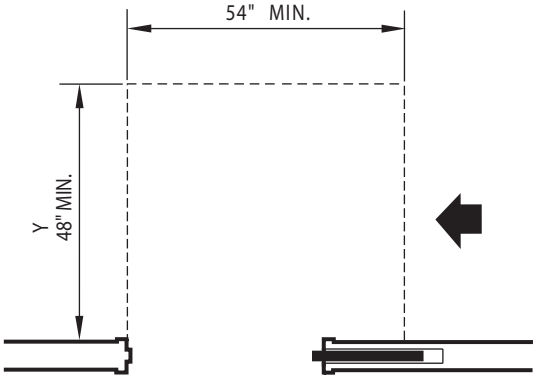

FIGURE 11A-8E—SLIDE-SIDE APPROACH - SLIDING DOORS AND FOLDING DOORS

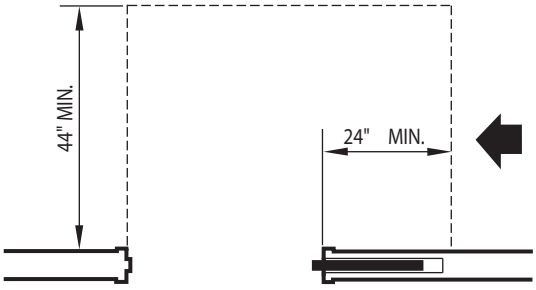

FIGURE 11A-8F—LATCH-SIDE APPROACH - SLIDING DOORS AND FOLDING DOORS

THESE DIAGRAMS ILLUSTRATE THE SPECIFIC REQUIREMENTS OF THESE REGULATIONS AND ARE INTENDED ONLY AS AN AID FOR BUILDING DESIGN AND CONSTRUCTION.

LEVEL MANEUVERING CLEARANCE AT DOORS (Continued)

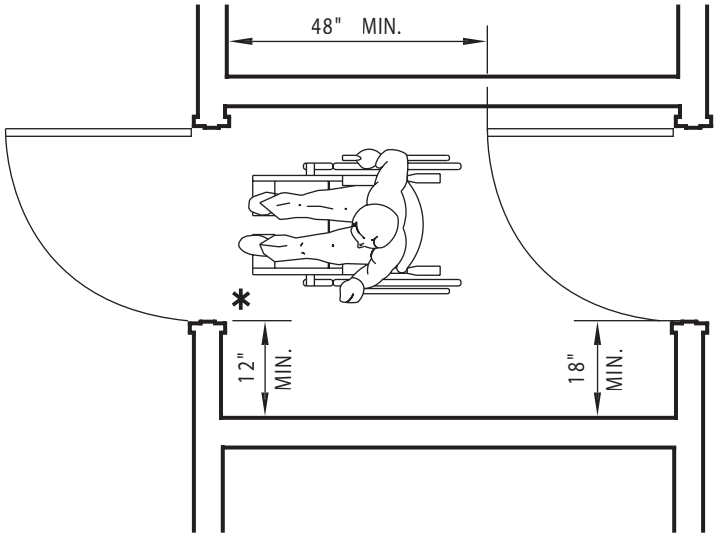

(a) DOOR IN SERIES

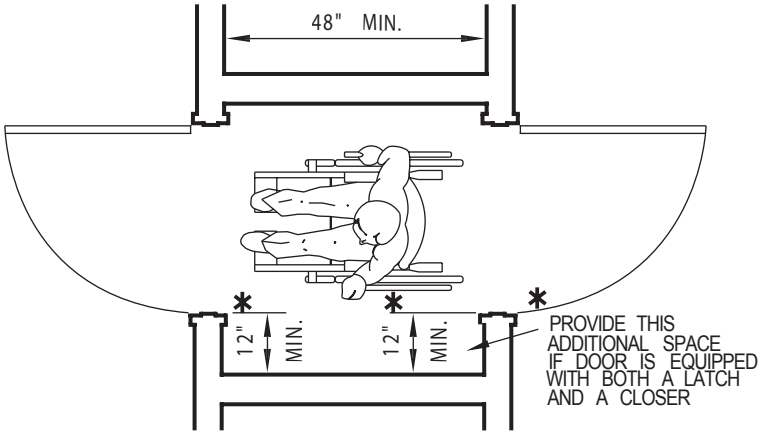

(b) BOTH DOORS OPEN OUT

(SERVING OTHER THAN A REQUIRED EXIT STAIRWAY)

THESE DIAGRAMS ILLUSTRATE THE SPECIFIC REQUIREMENTS OF THESE REGULATIONS AND ARE INTENDED ONLY AS AN AID FOR BUILDING DESIGN AND CONSTRUCTION.

FIGURE 11A-8G—VESTIBULE

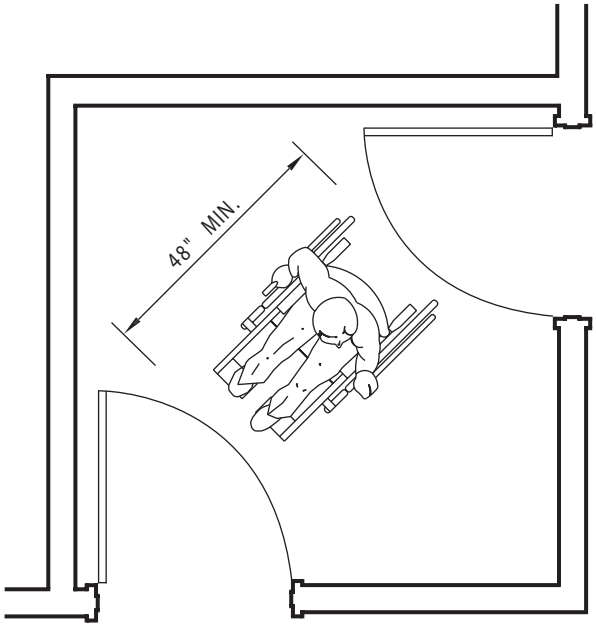

(a) DOORS AT ADJACENT WALLS

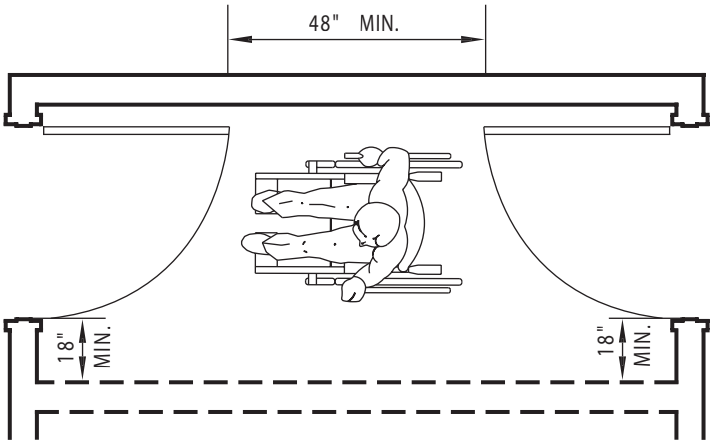

(b) DOORS AT OPPOSITE WALLS

THESE DIAGRAMS ILLUSTRATE THE SPECIFIC REQUIREMENTS OF THESE REGULATIONS AND ARE INTENDED ONLY AS AN AID FOR BUILDING DESIGN AND CONSTRUCTION.

FIGURE 11A-8H—VESTIBULE
(SERVING OTHER THAN A REQUIRED EXIT STAIRWAY)

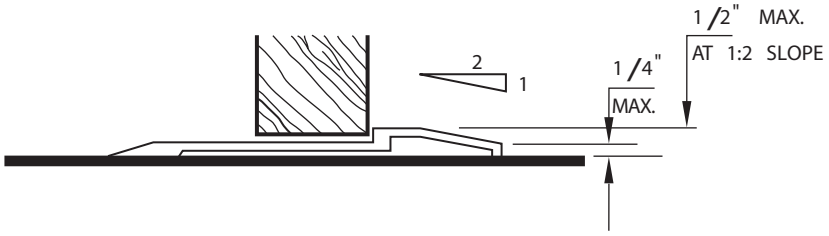

THESE DIAGRAMS ILLUSTRATE THE SPECIFIC REQUIREMENTS OF THESE REGULATIONS AND ARE INTENDED ONLY AS AN AID FOR BUILDING DESIGN AND CONSTRUCTION.

FIGURE 11A-8I—THRESHOLDS

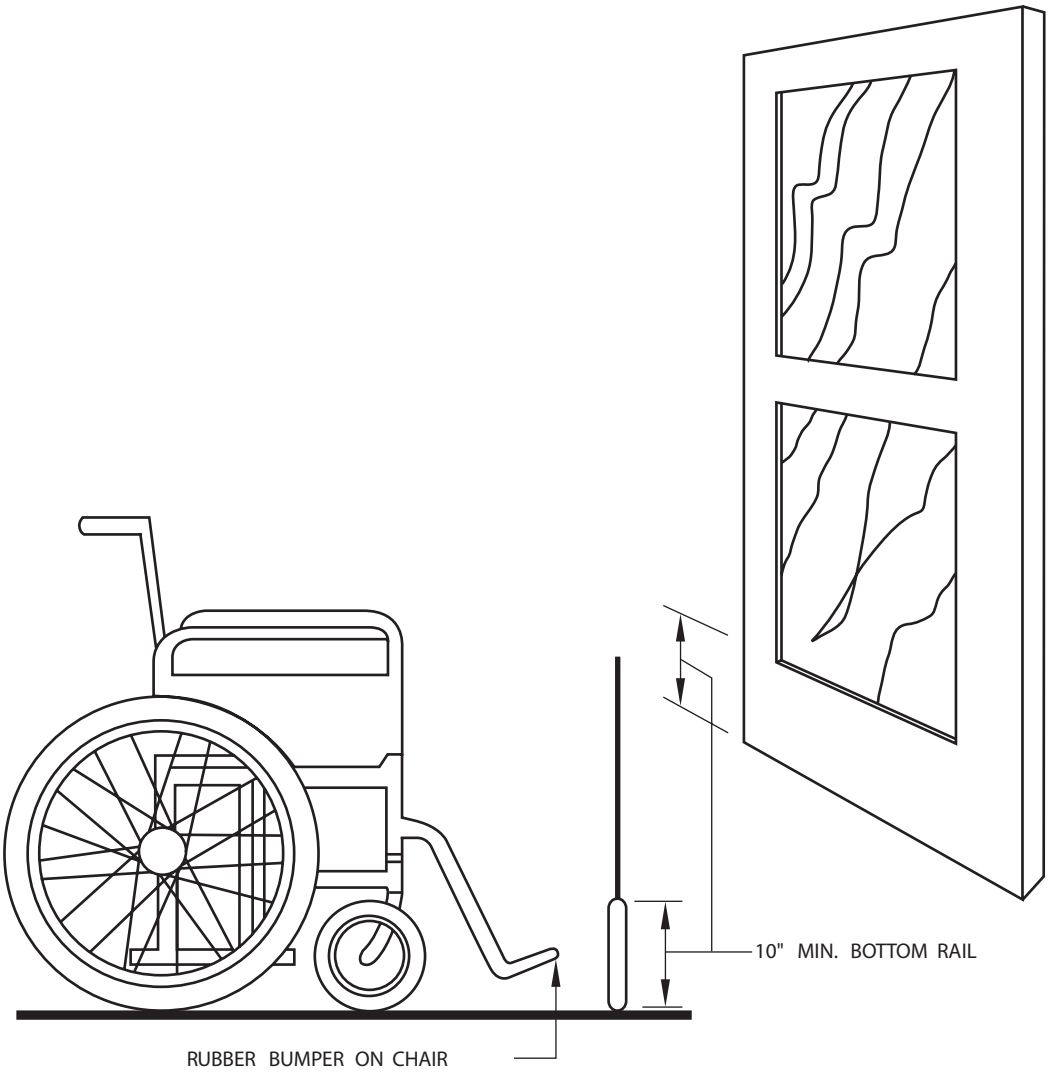

THIS DIAGRAM ILLUSTRATES THE SPECIFIC REQUIREMENTS OF THESE REGULATIONS AND IS INTENDED ONLY AS AN AID FOR BUILDING DESIGN AND CONSTRUCTION.

FIGURE 11A-8J—DOOR CONSTRUCTION

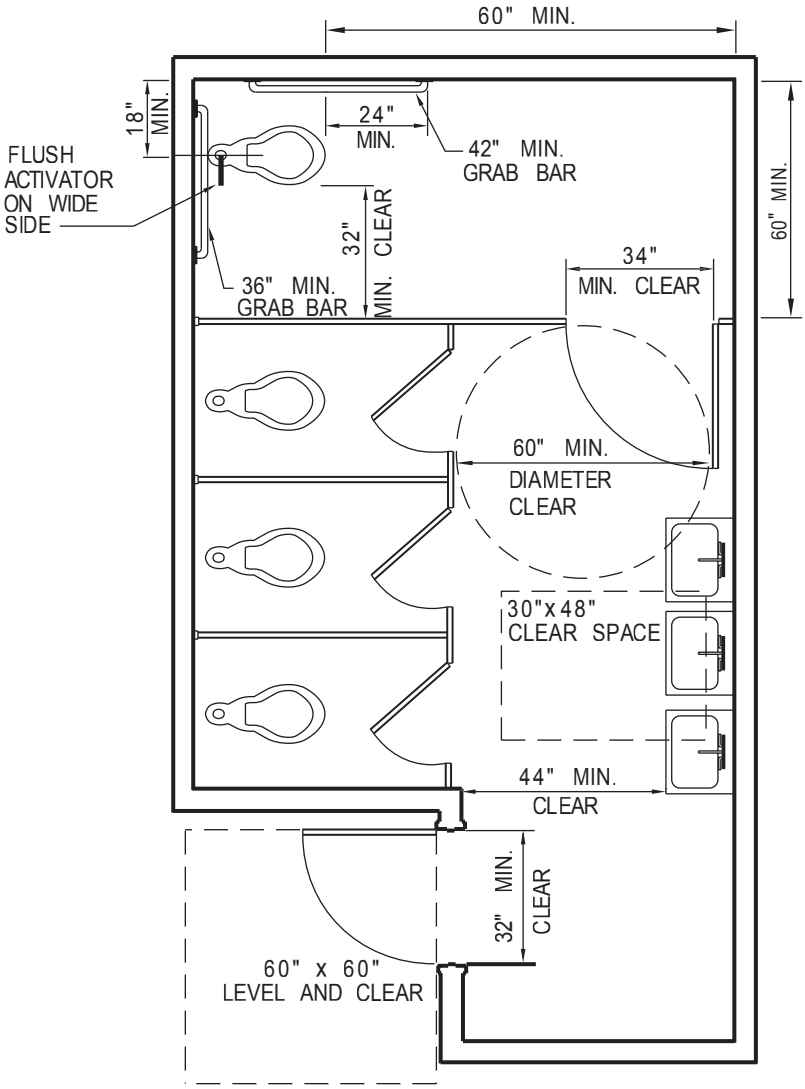

THIS DIAGRAM ILLUSTRATES THE SPECIFIC REQUIREMENTS OF THESE REGULATIONS AND IS INTENDED ONLY AS AN AID FOR BUILDING DESIGN AND CONSTRUCTION.

FIGURE 11A-9A—MULTIPLE-ACCOMMODATION TOILET FACILITY

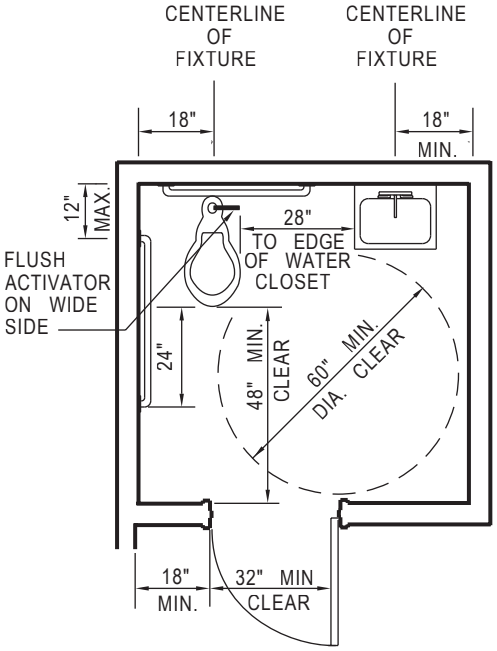

SINGLE-ACCOMMODATION TOILET FACILITY

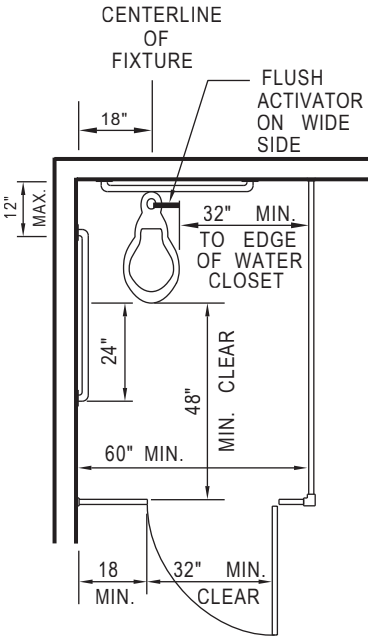

ACCESSINLE WATER CLOSET COMPARTMENT
WITHIN A MULTIPLE-ACCOMMODATION TOILET FACILITY

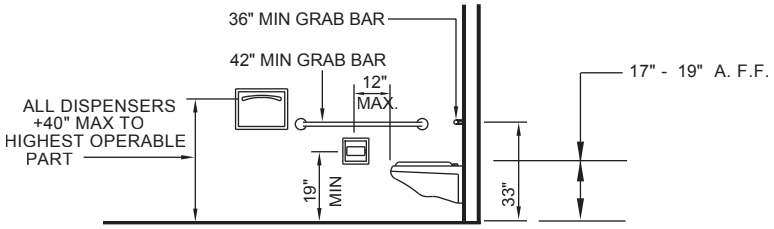

SIDE ELEVATION

THESE DIAGRAMS ILLUSTRATE THE SPECIFIC REQUIREMENTS
OF THESE REGULATIONS AND ARE INTENDED ONLY AS AN AID
FOR BUILDING DESIGN AND CONSTRUCTION

FIGURE 11A-9B

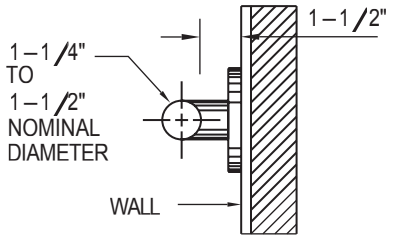

SECTION THROUGH TYPICAL GRAB BAR

THESE DIAGRAMS ILLUSTRATE THE SPECIFIC REQUIREMENTS OF THESE REGULATIONS AND ARE INTENDED ONLY AS AN AID FOR BUILDING DESIGN AND CONSTRUCTION

FIGURE 11A-9C—GRAB BAR SECTION

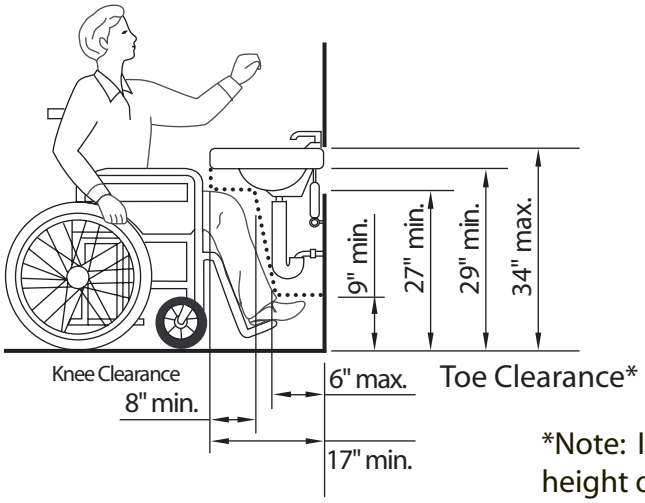

SIDE ELEVATION

*Note: If a minimum 9 inches height of toe clearance is provided, a maximum of 6 inches of the 48 inches of clear floor space required at the fixture may extend into the toe space.

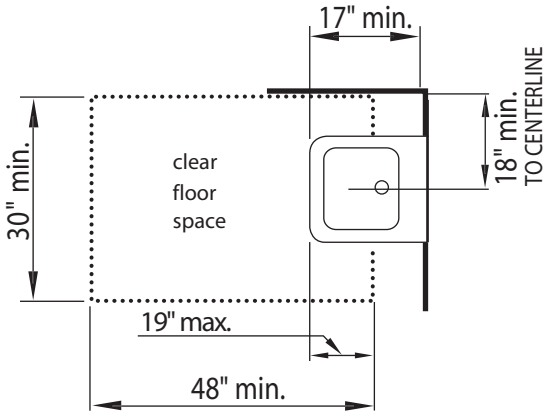

PLAN VIEW

THIS DIAGRAM ILLUSTRATES THE SPECIFIC REQUIREMENTS OF THESE REGULATIONS AND IS INTENDED ONLY AS AN AID FOR BUILDING DESIGN AND CONSTRUCTION.

FIGURE 11A-9D—KNEE CLEARANCE

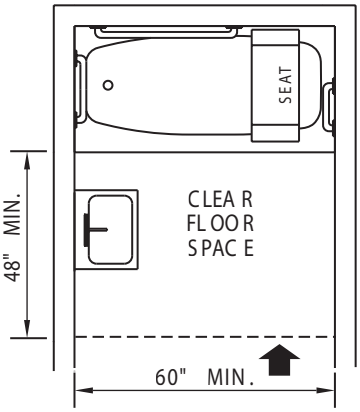

(a) WITH SEAT IN TUB

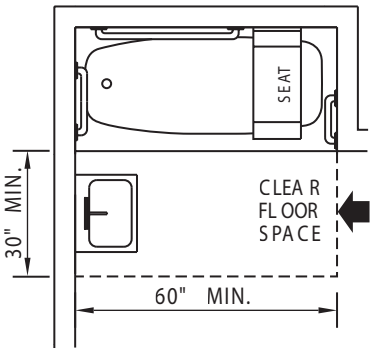

(b) WITH SEAT IN TUB

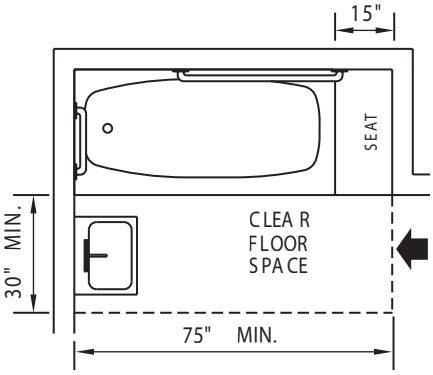

(c) WITH SEAT AT HEAD OF TUB

THESE DIAGRAMS ILLUSTRATE THE SPECIFIC REQUIREMENTS OF THESE REGULATIONS AND ARE INTENDED ONLY AS AN AID FOR BUILDING DESIGN AND CONSTRUCTION.

FIGURE 11A-9E—CLEAR FLOOR SPACE AT BATHTUBS

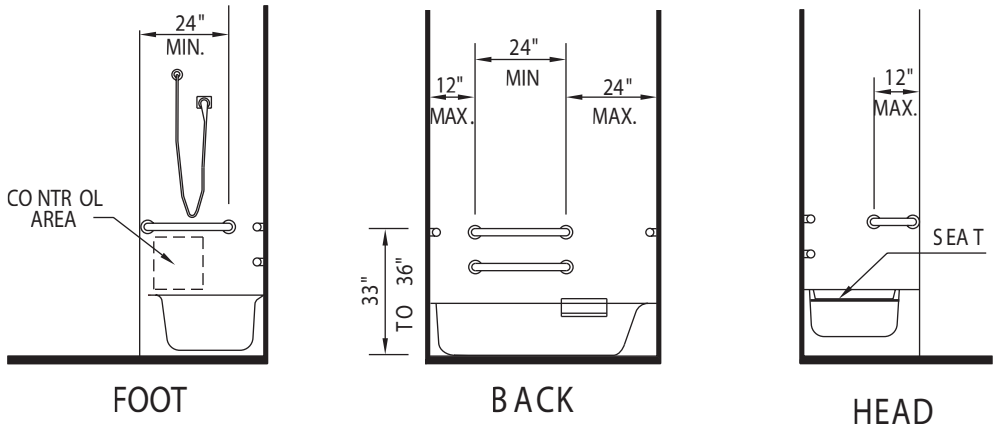

(a) WITH SEAT IN TUB

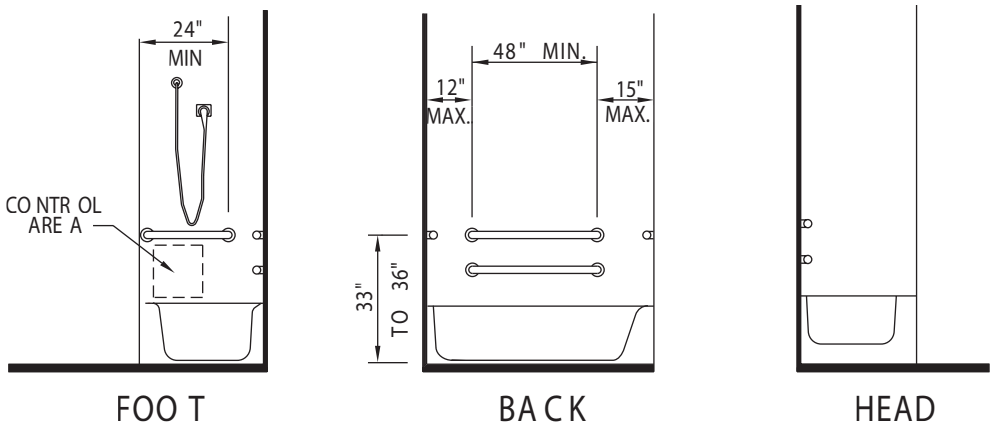

(b) WITH SEAT AT HEAD OF TUB

THESE DIAGRAMS ILLUSTRATE THE SPECIFIC REQUIREMENTS OF THESE REGULATIONS AND ARE INTENDED ONLY AS AN AID FOR BUILDING DESIGN AND CONSTRUCTION.

FIGURE 11A-9F—GRAB BARS AT BATHTUBS

(a) WATER CLOSET IN ADAPTABLE BATHROOMS

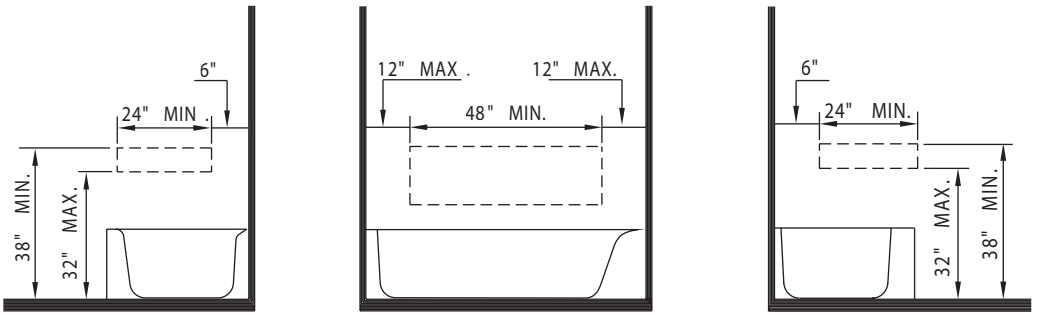

NOTE: THE AREA OUTLINED IN DASHED LINES REPRESENT LOCATIONS FOR FUTURE INSTALLATION OF GRAB BARS FOR TYP. FIXTURE CONFIGURATIONS

(b) LOCATION OF GRAB BAR REINFORCEMENTS FOR ADAPTABLE BATHTUBS

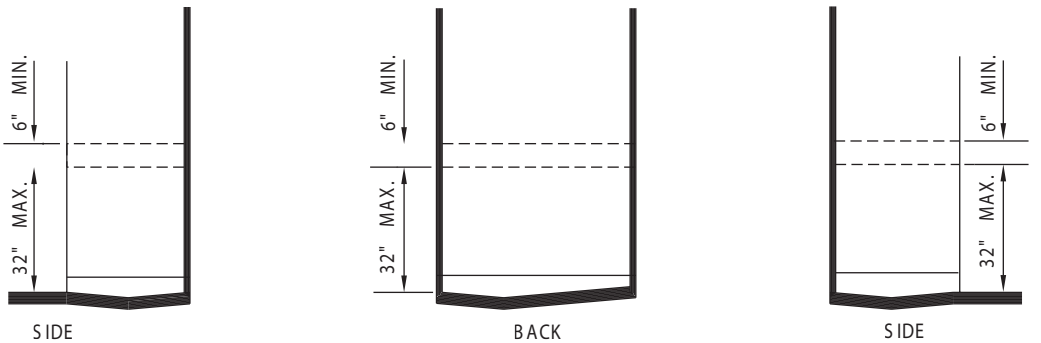

NOTE: THE AREA OUTLINED IN DASHED LINES REPRESENT LOCATION FOR FUTURE INSTALLATION OF GRAB BARS

(a) LOCATION OF GRAB BAR REINFORCEMENTS FOR ADAPTABLE SHOWERS

THESE DIAGRAMS ILLUSTRATE THE SPECIFIC REQUIREMENTS OF THESE REGULATIONS AND ARE INTENDED ONLY AS AN AID FOR BUILDING DESIGN AND CONSTRUCTION.

FIGURE 11A-9G

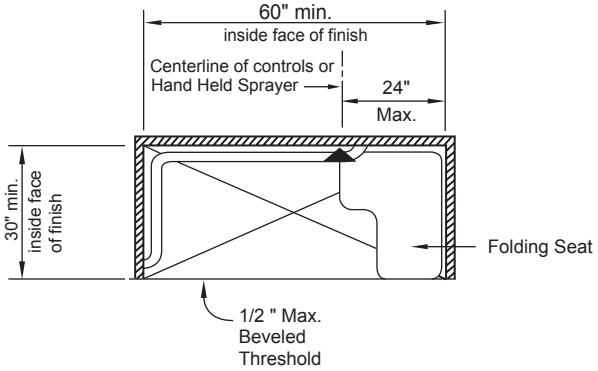

ROLL-IN SHOWER—A

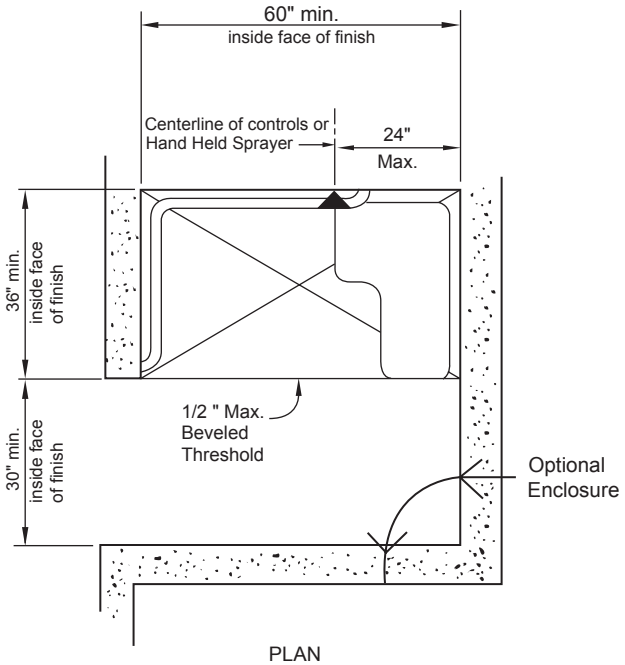

PLAN

ROLL-IN SHOWER—C
36" x 60" WITH ENCLOSURE

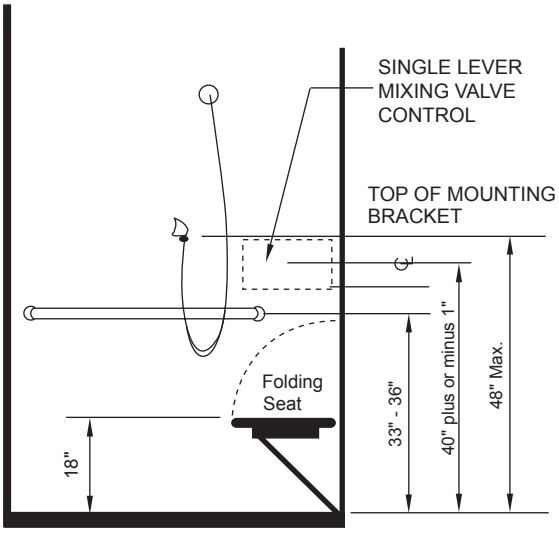

ELEVATION AT SHOWER
TYPICAL FOR A–C

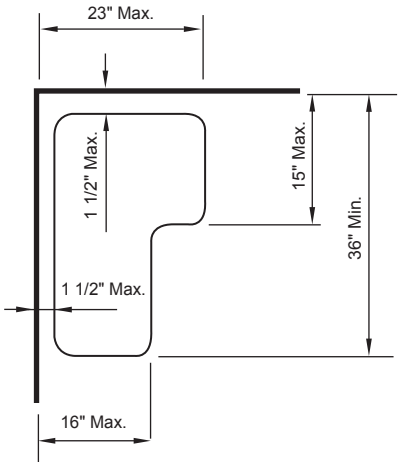

FOLDING SEAT

FIGURE 11A-9H—ROLL-IN SHOWER

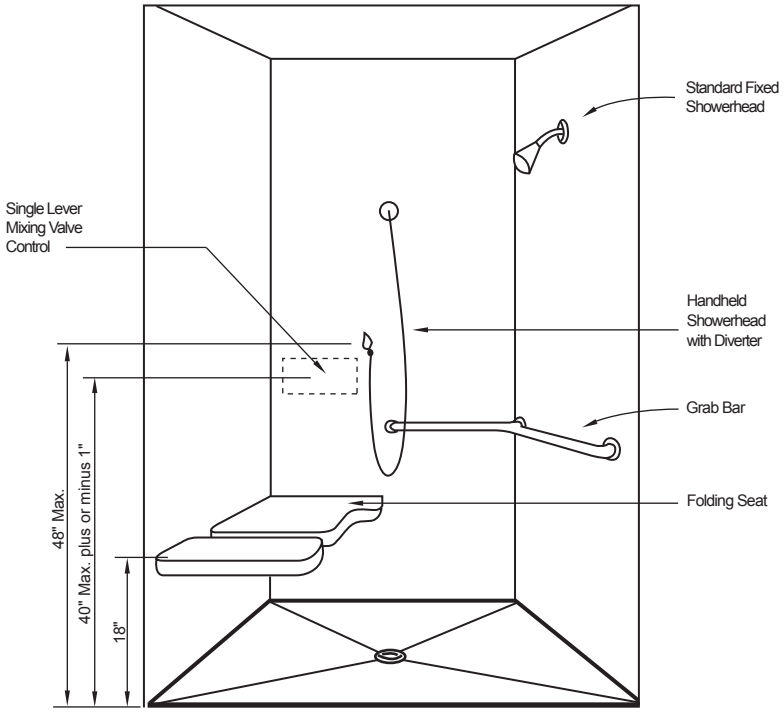

PERSPECTIVE OF ROLL-IN SHOWER—B
42" x 48" CALIFORNIA SIZE

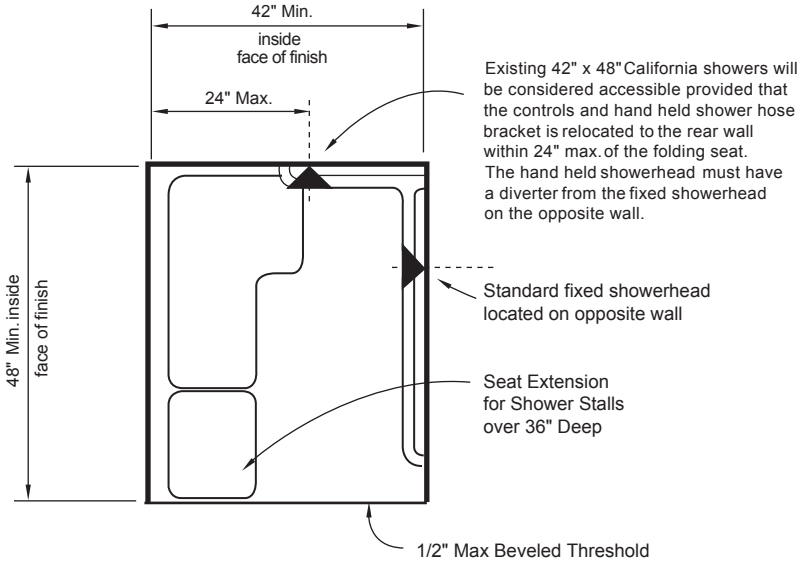

ROLL-IN SHOWER—B
42" x 48" CALIFORNIA SIZE

FIGURE 11A-9I —ROLL-IN SHOWER

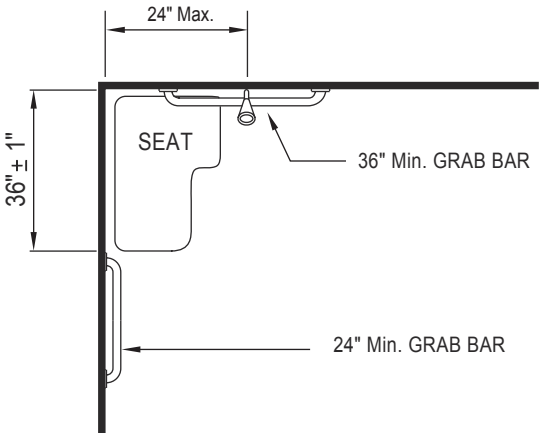

PLAN

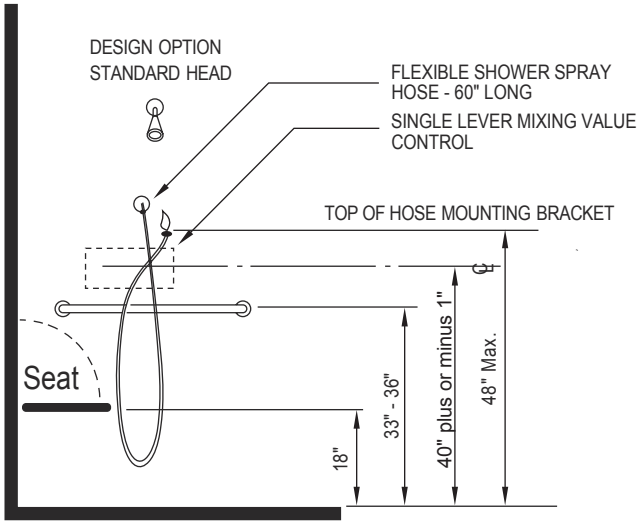

ELEVATION

THESE DIAGRAMS ILLUSTRATE THE SPECIFIC REQUIREMENTS OF THESE REGULATIONS AND ARE INTENDED ONLY AS AN AID FOR BUILDING DESIGN AND CONSTRUCTION

FIGURE 11A-9J—OPEN SHOWER

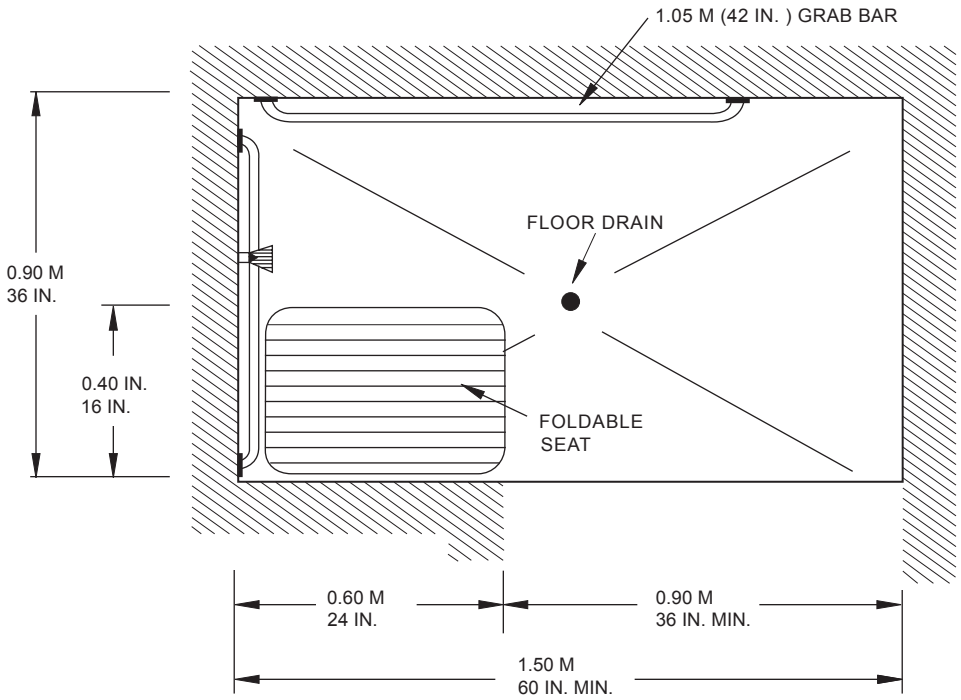

THIS DIAGRAM ILLUSTRATES THE SPECIFIC REQUIREMENTS OF THESE REGULATIONS AND IS INTENDED ONLY AS AN AID FOR BUILDING DESIGN AND CONSTRUCTION.

FIGURE 11A-9K—ALTERNATIVE ROLL-IN

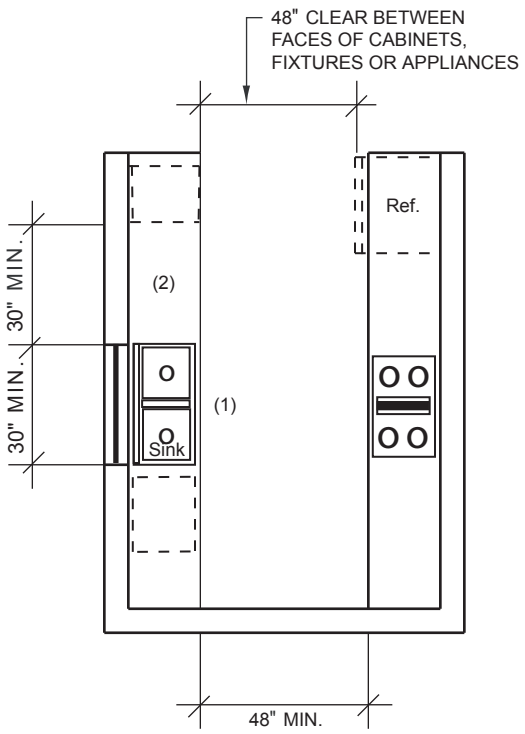

TYPICAL KITCHEN

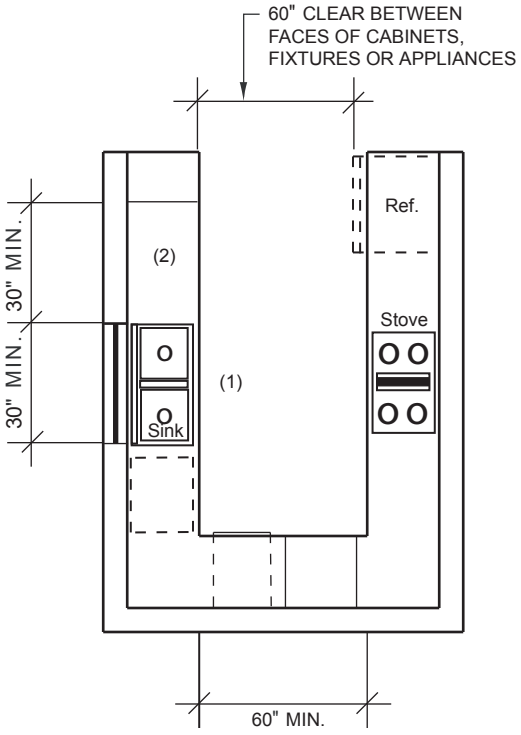

"U" SHAPED KITCHEN

(1) 30 inch wide counter top space for sink installation with removable base cabinet and finish flooring beneath sink
(2) 30 inch wide counter top workspace
(3) 30 inch by 48 inch clear space adjacent to range or cooktop to allow parallel approach
(4) 30 inch by 48 inch either parallel approach at oven, dishwasher, trash compactor or refrigerator

FIGURE 11A-10A—KITCHEN SPECIFICATIONS

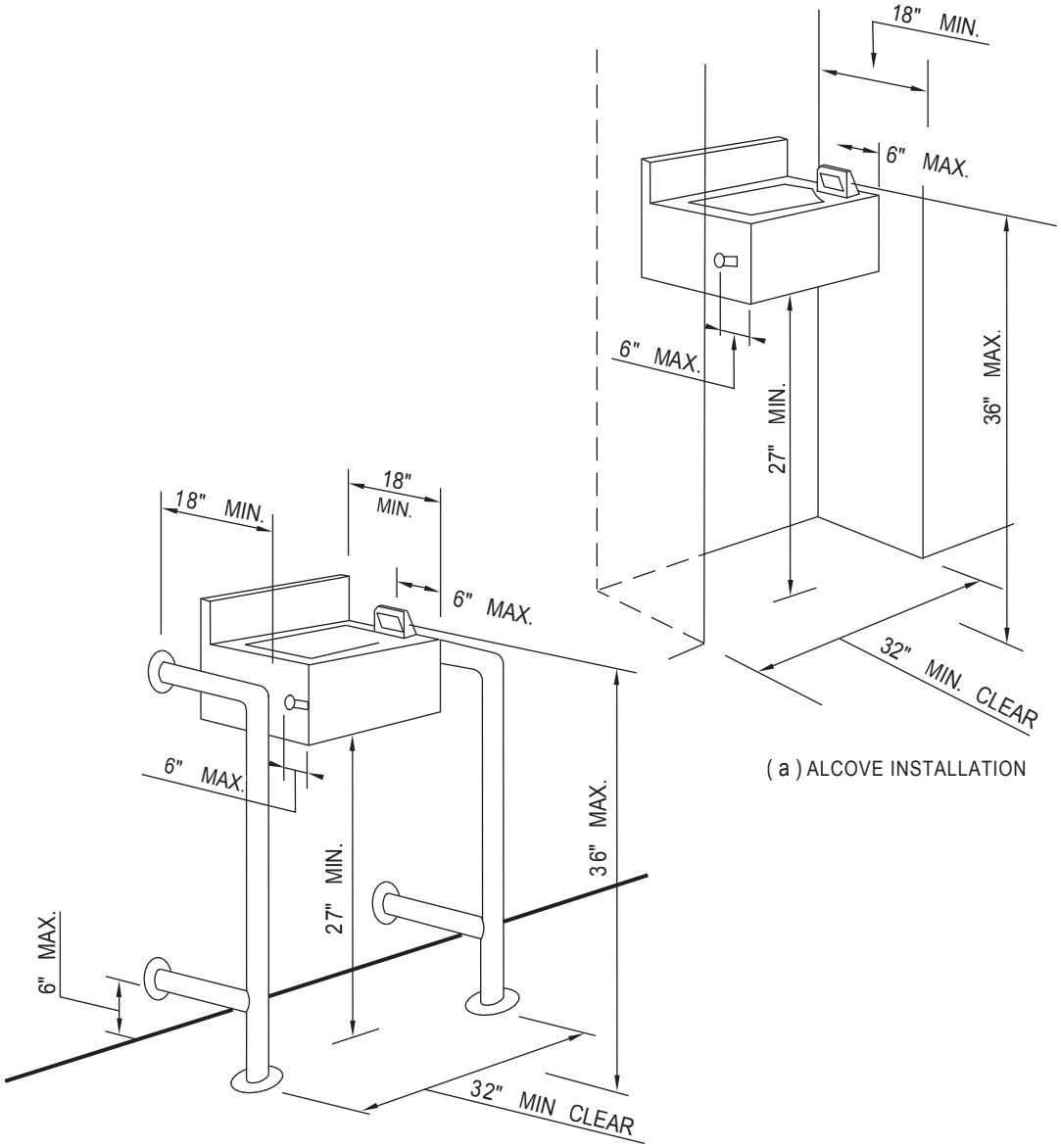

(a) ALCOVE INSTALLATION

(b) NONALCOVE WING WALL INSTALLATION

THESE DIAGRAMS ILLUSTRATE THE SPECIFIC REQUIREMENTS OF THESE REGULATIONS AND ARE INTENDED ONLY AS AN AID FOR BUILDING DESIGN AND CONSTRUCTION

FIGURE 11A-11A—WATER FOUNTAINS

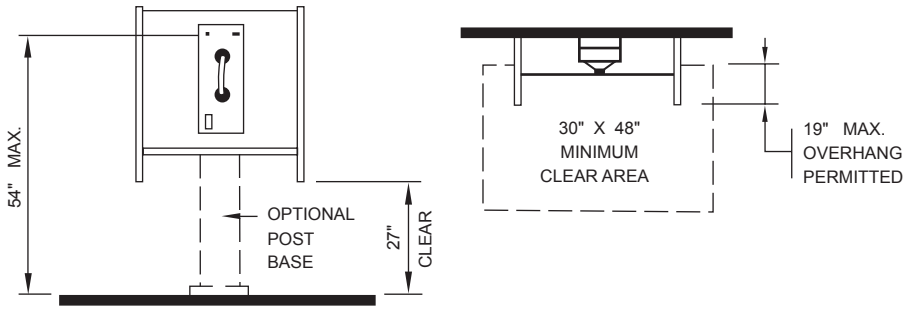

ELEVATION PLAN

(a) SIDE REACH ARRANGEMENT

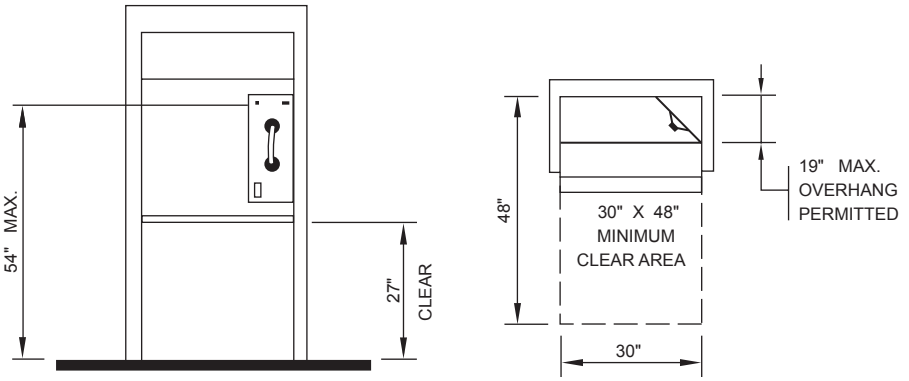

ELEVATION PLAN

(b) FULL HEIGHT ENCLOSURE

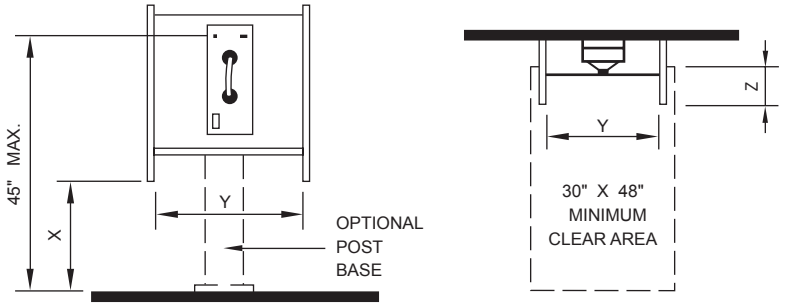

NOTE: IF Y IS LESS THAN 30 INCHES, THEN X SHALL BE GREATER THAN 27 INCHES.

NOTE: IF Z IS GREATER THAN 12 INCHES, THEN Y SHALL BE GREATER THAN 30 INCHES.

ELEVATION PLAN

(c) FORWARD REACH ARRANGEMENT

THESE DIAGRAMS ILLUSTRATE THE SPECIFIC REQUIREMENTS OF THESE REGULATIONS AND ARE INTENDED ONLY AS AN AID FOR BUILDING DESIGN AND CONSTRUCTION

FIGURE 11A-11B—MOUNTING HEIGHTS AND CLEARANCES FOR TELEPHONES

FIGURE 11A-11C— INTERNATIONAL TTY SYMBOL

FIGURE 11A-11D— VOLUME CONTROL TELEPHONES

FIGURE 11A-11E— INTERNATIONAL SYMBOL OF ACCESS FOR HEARING LOSS

THESE DIAGRAMS ILLUSTRATE THE SPECIFIC REQUIREMENTS OF THESE REGULATIONS AND ARE INTENDED ONLY AS AN AID FOR BUILDING DESIGN AND CONSTRUCTION.