**STATE OF CALIFORNIA**
**STATE AND CONSUMER SERVICES AGENCY**
**CALIFORNIA BUILDING STANDARDS COMMISSION**
**2525 NATOMAS PARK DR., SUITE 130**
**SACRAMENTO, CA 95833**
**(916) 263-0916 Phone**
**(916) 263-0959 Fax**
**Email: cbsc@dgs.ca.gov**

**Office Use Item No.** _____

**PARTICIPATION COMMENTS FOR THE NOTICE DATED OCTOBER 26, 2012**
**Written comments are to be sent to the above address.**

**WRITTEN COMMENT DEADLINE: DECEMBER 10, 2012**

Date: December 2, 2012

From: From: Mr. Daniel Paul Larsen, CASp 08-00012

Name (Print or type) (Signature)

DPL Consulting & Inspection Services, Inc.

--

Agency, jurisdiction, chapter, company, association, individual, etc.

| 11990 Pericles Drive | Rancho Cordova | CA | 95742 |
|---|---|---|---|
| Street | City | State | Zip |

I/We Do not agree with:

[ X ] The Agency proposed modifications As Submitted on Section No. **11B-608.2.1; 11B-608.3.1; 11B-608.5.1**

and request that this section or reference provision be recommended:

[ ] Approved **[** ] Disapproved [ ] Held for Further Study **[X ] Approved as Amended**

**We request that the committee decisions to overturn public comment during the BSC committee public hearings be reversed and approve the public hearing request to implement the following ADA Standards into the 2013 CBC** *(however it is to be identified above)*

**Suggested Revisions to the Text of the Regulations:**

**We request that the provisions for the roll in shower be reinstated as specific in the existing 2010 ADA Standards as folows:**

***11B*-608.2.1 *~~(Reserved)~~* Transfer Type Shower Compartments. Transfer type shower compartments shall be 36 inches (915 mm) by 36 inches (915 mm) clear inside dimensions measured at the center points of opposing sides and shall have a 36 inch (915 mm) wide minimum entry on the face of the shower compartment. Clearance of 36 inches (915 mm) wide minimum by 48 inches (1220 mm) long minimum measured from the control wall shall be provided.**

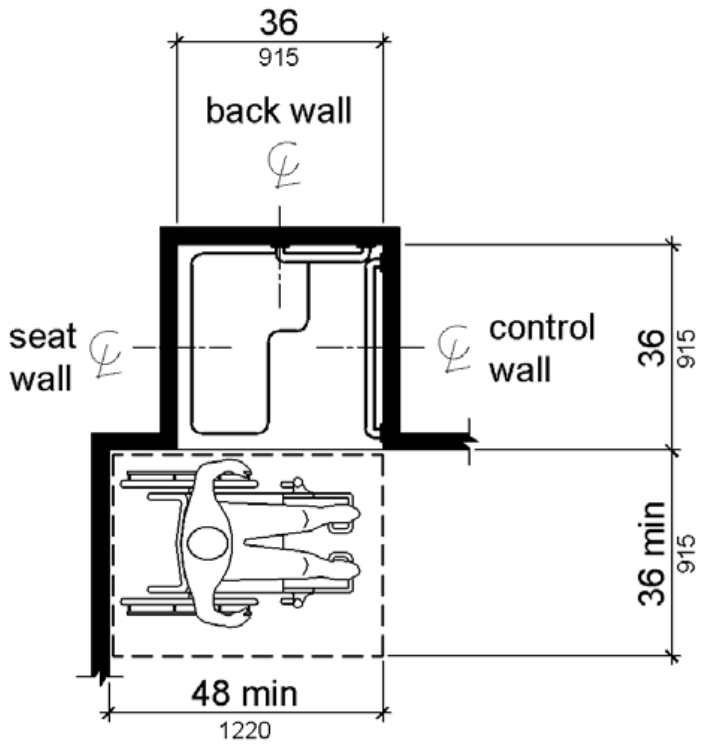


Note: inside finished dimensions measured at the center points of opposing sides

**Figure *11B*-608.2.1**
**Transfer Type Shower Compartment Size and Clearance**

***11B*-608.3.1** ***(Reserved)*** **Transfer Type Shower Compartments. In transfer type compartments, grab bars shall be provided across the control wall and back wall to a point 18 inches (455 mm) from the control wall.**

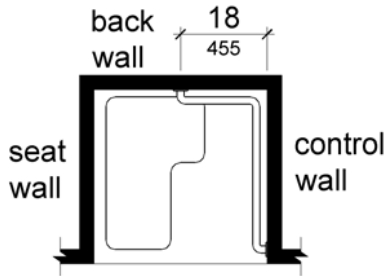


**Figure *11B*-608.3.1**
**Grab Bars for Transfer Type Showers**

***11B*-608.5.1** ***(Reserved)*** **Transfer Type Shower Compartments. In transfer type shower compartments, the controls, faucets, and shower spray unit shall be installed on the side wall opposite the seat 38 inches (965 mm) minimum and 48 inches (1220 mm)**

**maximum above the shower floor and shall be located on the control wall 15 inches (380 mm) maximum from the centerline of the seat toward the shower opening.**

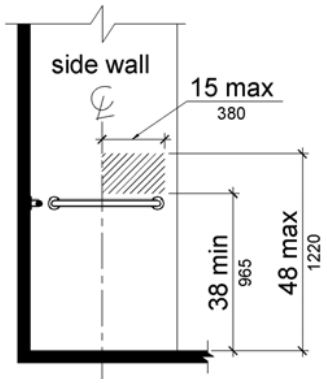


**Figure *11B*-608.5.1**
**Transfer Type Shower Compartment Control Location**

**Note: and all other references to the roll in shower that may not be specifically included in this change as necessary to make a complete reversal of the intended removal of this item in the new Standards.**

**Reason:** [The reason should be concise if the request is for "Disapproval," "Further Study," or "Approve As Amend" and identify at least one of the 9-point criteria (following) of Health and Safety Code §18930.]

The first reason is to clarify DSA'S purpose and scoping requirements that were established in the public hearing portion of this code cycle. It was DSA/AC intent to use the ADA standards as the basic code format for California and as such the directive was is to incorporate as many of the existing ADA standards as possible in order to facilitate certification of our code to comply with the minimum standards under ADA. Per DSA's main purpose and goal specified within the public comment hearings was to include any and all language that California does not currently have and insert only those modifications which are determined to exceed the minimum standards stipulated in ADA.. This section of the regulations that provide language for the transfer type shower falls under these conditions.

DSA/AC does not currently have the transfer type shower stall included in our current regulations because they chose to remove these standards due to public comments within the late 1980's code cycles. During that time, the 36" transfer showers was deemed not useable to a person with disabilities because of its small size and configuration. At that time DSA/AC invented, with the approval of the disabled community, as we know it, the 42" X 48" transfer shower. This shower went through many modifications based upon additional public comments from the disabled access community and has been installed in thousands of construction projects throughout California. During the 1998 UBC Adoption process of the California amendments the 30" X 60" shower design was implemented to be included as an option in addition to the 42' X 48" transfer type shower.

When California Adopted the 2007 CBC the 42" X 48" transfer shower went away, again due to public comments from the disabled access community because they now felt that the size was then too large and people were falling off of the seat to reach grab bars and controls even though DSA/Ac modified the location of the controls many times to accommodate these conditions. The result in this was the 42" X 48" shower being removed from our building code standards and the use of only the following three types of showers being required. The 30" x 60" ; the 36" x 60" and the alternate transfer type shower. All of which we currently have today and which are included in the proposed 2012 access standards.

Because of this rule changing many of the businesses cannot modify their existing 42" X 48" showers because of "technically infeasible" conditions mostly because of size limits within existing buildings. Because of these regulations, most showers which have been a convenience and additional benefit to employees are being removed and not being replaced. If the standard transfer type shower were to be reinstated in the code regulations as an option then it becomes feasible to building owners to modify the existing 42" X 48" shower to meet a smaller version which can be installed within the same space.

If you were to look at the configuration of the 36" standards transfer shower and compare it to the 30" X 60" roll in shower, the 36" X 60" roll in shower and the 36" x 60" alternate roll in shower and visualize how a person who may need to transfer to the seat in all three applications you will seed that it is actually using the same space and clear spaces in all three designs.

The main flaw in the roll in shower design is that we have used the wording 30" minimum and 60" minimum in specifying the minimum size but failed to limit the maximum size one can design it and how this maximum size may not provide the minimum accessibility needed to use the facility. If one can visualize a roll in shower that is 48" in depth and say 96" in width and apply the location of where the grab bars are to be placed you will see that this condition may not provide the minimum requirements for access specially if the use of the grab bars will be needed when transferring to the seat. Will this shower configuration type actually meet the needs of the end user? Probably not.

We believe that the reinstated ADA standard transfer shower design will meet the needs of the disabled community. It provide no less access than what is currently required in the roll in shower or the alternate roll in shower as it is being applied in the current code and in the proposed ADA standards. We believe that it is needed by the disabled access community and will be accepted as an alternative of existing building owners who would like to provide complying showers for their employees but cannot do so due excessive costs in modifying the building and as such decide to remove them entirely.

We currently do not understand why the 36" transfer shower was not included in this code change proposals and believe that DSA's reason- "just because we do not have it currently" is a valid reason and or justification to not include it in these regulations. If this type of shower is the minimum standards for the entire USA then it should be included as a minimum standard within California unless a justification is presented to all parties stating why it doe not meet minimum standards here. And present this at these public hearings for all to take part in.

Another reason for this to be implemented is the inconsistences' within the California regulation as a whole. State agencies have the right to choose to and not include items based upon their own needs and have not assessed the needs in general of access population as to what their needs may be. An example of this is the shower provision within HCD which still has and uses the 42" X 48" shower within their common areas and facilities under their jurisdiction. One must ask one's self is there really a difference in the type of facilities being constructed under HCD/AC compared to DSA/AC.. A time share facility or apartment house which has a rec room at a pool can use the 42" x 48" shower but a Hotel with a pool cannot. Are the people using these of different sizes and shapes? I think not!

At the BSC hearings this concept was brought up and went to a committee vote which was turned down by one vote. The reasoning it was denied was that the disable access community did not have sufficient feedback on these specific issues. I must state that the disabled access community did not have any comments regarding the reinstatement of the 42" X 48" shower presented by HCD at their public hearings. We wish to challenge the committee recommendation for disapproval of this code concept and bring it up again during this 45 day challenge cycle. We hope that all parties involved can see that the 36" shower is really no different than the existing conditions of the roll in shower concept that is going forward and over turn this decision and

reinstate the ADA Standards that are really needed to meet minimum access requirements for our disabled community.

**Cost impact proposed revision**: This code change will cause a reduction of costs to modify the 42" X 48" existing roll in shower based upon previous codes which allowed this type of fixture to be installed in thousands of existing facilities in California and which is still being allowed in HCD occupancies relating to common areas of apartment buildings and timeshare units.

9 point criteria validation is by item **1, 2, 3, 4, 5, 6 & 7A (explained above)**

**HEALTH & SAFETY CODE SECTION 18930**

**SECTION 18930. APPROVAL OR ADOPTION OF BUILDING STANDARDS; ANALYSIS AND CRITERIA; REVIEW CONSIDERATIONS; FACTUAL DETERMINATIONS**

**(a)** Any building standard adopted or proposed by state agencies shall be submitted to, and approved or adopted by, the California Building Standards Commission prior to codification. Prior to submission to the commission, building standards shall be adopted in compliance with the procedures specified in Article 5 (commencing with Section 11346) of Chapter 3.5 of Part 1 of Division 3 of Title 2 of the Government Code. Building standards adopted by state agencies and submitted to the commission for approval shall be accompanied by an analysis written by the adopting agency or state agency that proposes the building standards which shall, to the satisfaction of the commission, justify the approval thereof in terms of the following criteria:

(1) The proposed building standards do not conflict with, overlap, or duplicate other building standards.

(2) The proposed building standard is within the parameters established by enabling legislation and is not expressly within the exclusive jurisdiction of another agency.

**(3) The public interest requires the adoption of the building standards.**

**(4) The proposed building standard is not unreasonable, arbitrary, unfair, or capricious, in whole or in part.**

(5) The cost to the public is reasonable, based on the overall benefit to be derived from the building standards.

**(6) The proposed building standard is not unnecessarily ambiguous or vague, in whole or in part.**

(7) The applicable national specifications, published standards, and model codes have been incorporated therein as provided in this part, where appropriate.

(A) If a national specification, published standard, or model code does not adequately address the goals of the state agency, a statement defining the inadequacy shall accompany the proposed building standard when submitted to the commission.

(B) If there is no national specification, published standard, or model code that is relevant to the proposed building standard, the state agency shall prepare a statement informing the commission and submit that statement with the proposed building standard.

(8) The format of the proposed building standards is consistent with that adopted by the commission.

(9) The proposed building standard, if it promotes fire and panic safety as determined by the State Fire Marshal, has the written approval of the State Fire Marshal.