45-DAY EXPRESS TERMS
FOR
PROPOSED BUILDING STANDARDS
OF THE
DIVISION OF THE STATE ARCHITECT (DSA-AC)

REGARDING THE CALIFORNIA BUILDING CODE
CALIFORNIA CODE OF REGULATIONS, TITLE 24, PART 2

2013 CALIFORNIA BUILDING CODE
INTERVENING CODE CYCLE

LEGEND FOR EXPRESS TERMS

1. Existing California amendments or code language being modified are in italics when they appear in the model code text: All such language appears in *italics*, modified language is underlined.

2. New California amendments: All such language appears *underlined and in italics*.

3. Repealed text: All such language appears in ~~strikeout~~.

CHAPTER 1
ADMINISTRATION

ITEM 1.01

CHAPTER 1 – MATRIX ADOPTION TABLE

Adopting Agency		BSC	SFM	HCD			**DSA**		OSHPD				CSA	DHS	AGR	DWR	CEC	CA	SL	SLC
Adopt entire California Chapter				1	2	1/AC	**AC**	SS	1	2	3	4								
Adopt entire California Chapter as amended (amended sections listed below)																				
Adopt only those sections that are listed below							X													
Chapter / Section	Codes																			
Division I																				
1.1	CA						X													
1.2.2	CA						X													
1.9.1 – 1.9.1.8	CA						X													
Division II																				
101.1 – 101.4.5	CA						X													

104.11	IBC						X													
111.2	IBC						X													

DIVISION I – CALIFORNIA ADMINISTRATION
SECTION 1.2
BUILDING STANDARDS COMMISSION

1.2.2 Alternative materials, design and methods of construction and equipment. *The provisions of this code are not intended to prevent the installation of any material or to prohibit any design or method of construction not specifically prescribed by this code, provided that any such alternative has been approved. An alternative material, design or method of construction shall be approved where the building official finds that the proposed design is satisfactory and complies with the intent of the provisions of this code, and that the material, method or work offered is, for the purpose intended, at least the equivalent of that prescribed in this code in quality, strength, effectiveness, fire resistance, durability and safety.*

DIVISION II – SCOPE AND ADMINISTRATION
SECTION 104
DUTIES AND POWERS OF BUILDING OFFICIAL

104.11 Alternative materials, design and methods of construction and equipment. The provisions of this code are not intended to prevent the installation of any material or to prohibit any design or method of construction not specifically prescribed by this code, provided that any such alternative has been approved. An alternative material, design or method of construction shall be approved where the building official finds that the proposed design is satisfactory and complies with the intent of the provisions of this code, and that the material, method or work offered is, for the purpose intended, at least the equivalent of that prescribed in this code in quality, strength, effectiveness, fire resistance, durability and safety.

CHAPTER 2
DEFINITIONS

ITEM 2.01

Definition of ASSEMBLY AREA

ASSEMBLY AREA. [DSA-AC] *A building or facility, or portion thereof, used for the purpose of entertainment, educational or civic gatherings, or similar purposes. For the purposes of these requirements, assembly areas include, but are not limited to, classrooms, lecture halls, courtrooms, public meeting rooms, public hearing rooms, legislative chambers, motion picture houses, auditoria, theaters, playhouses, dinner theaters, concert halls, centers for the performing arts, amphitheaters, arenas, stadiums, grandstands or convention centers. Common use conference rooms and common use meeting rooms are also assembly areas for the purposes of these requirements.*

RELATED ITEM 2.01.1

Chapter 11B
***11B*-219 Assistive listening systems**

***11B*-219.2 Required systems.** *An assistive listening system shall be provided in assembly areas, including common use conference rooms and common use meeting rooms.*

~~**Exception:**~~ ***Exceptions:***

1. *This section does not apply to systems used exclusively for paging, background music, or a combination of these two uses.*
2. *Private offices for individual use and workstations shall not be required to comply with Section 11B-219.2.*

ITEM 2.02

Definition of DESIGNATED PUBLIC TRANSPORTION
Definition of SPECIFIED PUBLIC TRANSPORTATION

DESIGNATED PUBLIC TRANSPORTATION. *[DSA-AC] Transportation provided by a public entity (other than public school transportation) by bus, rail, or other conveyance (other than transportation by aircraft or intercity or commuter rail transportation) that provides the general public with general or special service, including charter service, on a regular and continuing basis.*

SPECIFIED PUBLIC TRANSPORTATION. *[DSA-AC]* ~~*Transportation by bus, rail or any other conveyance (other than by aircraft) that provides the general public with general or special service (including charter service) on a regular and continuing basis.*~~ *Transportation by bus, rail, or any other conveyance (other than aircraft) provided by a private entity to the general public, with general or special service (including charter service) on a regular and continuing basis.*

CHAPTER 10
MEANS OF EGRESS

ITEM 10.01

CHAPTER 10 – MATRIX ADOPTION TABLE

Adopting Agency		BSC	SFM	HCD			DSA		OSHPD				CSA	DHS	AGR	DWR	CEC	CA	SL	SLC
Adopt entire California Chapter				1	2	1/AC	**AC**	SS	1	2	3	4								
Adopt entire California Chapter as amended (amended sections listed below)																				
Adopt only those sections that are listed below							X													
Chapter / Section	Codes																			
1003.1, not SFM exception	CA						X													
1007.1	CA						X													
1007.2	CA						X													
1007.2.1	IBC						X													
1007.3	CA						X													
1007.4	IBC						X													
1007.5	CA						X													

1007.5.1	IBC						X													
1007.6	CA						X													
1007.6.1	CA						X													
1007.6.2	CA						X													
1007.6.3	IBC						X													
1007.7	CA						X													
1007.7.1	IBC						X													
1007.7.2	IBC						X													
1007.7.3	IBC						X													
1007.7.4	IBC						X													
1007.7.5	IBC						X													
1007.7.6	IBC						X													
1007.8	IBC						X													
1007.8.1	CA						X													
1007.8.1.1	CA						X													
1007.8.2	CA						X													
1007.9	CA						X													
1007.10	CA						X													
1007.11	CA						X													
1007.12	CA						X													
1008 (1st paragraph below title only)	CA						X													
1008.1.9.7 (Item 5.1 only)	CA						X													
1009 (1ST paragraph below title only)	CA						X													
1009.7.2 Exc. 6 only	CA						X													
1009.15 (2nd paragraph only)	CA						X													
1010 (1st paragraph below title only)	CA						X													
1011.4	CA						X													
1012 1st paragraph below title only	CA						X													
1013.2	IBC						X													
1013.3	CA						X													
1017 (1st paragraph below title only)	CA						X													
1017.3 Exc only	CA						X													
1022.9 2nd paragraph only	CA						X													

CHAPTER 11B
ACCESSIBILITY TO PUBLIC BUILDINGS, PUBLIC ACCOMMODATIONS, COMMERCIAL BUILDINGS AND PUBLIC HOUSING

ITEM 11B.01

DIVISION 2: SCOPING REQUIREMENTS

***11B*-202 Existing buildings and facilities**

11B*-202.4 *Path of travel requirements in* alterations*, additions and structural repairs. *…*

Exceptions:

1. …
2. …
3. …
4. …
5. …
6. …
7. …

8. *When the adjusted construction cost is less than or equal to the current valuation threshold, as defined in Chapter 2, Section 202, the cost of compliance with Section 11B-202.4 shall be limited to 20 percent of the adjusted construction cost of alterations, structural repairs or additions. When the cost of full compliance with Section 11B-202.4 would exceed 20 percent, compliance shall be provided to the greatest extent possible without exceeding 20 percent.*

When the adjusted construction cost exceeds the current valuation threshold, as defined in Chapter 2, Section 202, and the enforcing agency determines the cost of compliance with Section 11B-202.4 is an unreasonable hardship, as defined in Chapter 2, Section 202, full compliance with Section 11B-202.4 shall not be required. Compliance shall be provided by equivalent facilitation or to the greatest extent possible without creating an unreasonable hardship; but in no case shall the cost of compliance be less than 20 percent of the adjusted construction cost of alterations, structural repairs or additions. The details of the finding of unreasonable hardship shall be recorded and entered into the files of the enforcing agency and shall be subject to Chapter 1, Section 1.9.1.5, Special Conditions for Persons with Disabilities Requiring Appeals Action Ratification.

For the purposes of this exception, the adjusted construction cost of alterations, structural repairs or additions shall not include the cost of alterations to path of travel elements required to comply with Section 11B-202.4.

In choosing which accessible elements to provide, priority should be given to those elements that will provide the greatest access in the following order:

1. *An accessible entrance;*
2. *An accessible route to the altered area;*
3. *At least one accessible restroom for each sex <u>or a single accessible unisex restroom</u>;*
4. *Accessible telephones;*
5. *Accessible drinking fountains; and*
6. *When possible, additional accessible elements such as parking, storage and alarms.*

If an area has been altered without providing an accessible path of travel to that area, and subsequent alterations of that area or a different area on the same path of travel are undertaken within three years of the original alteration, the total cost of alterations to the areas on that path of travel during the preceding three-year period shall be considered in determining whether the cost of making that path of travel accessible is disproportionate.

9. …

ITEM 11B.02

DIVISION 2: SCOPING REQUIREMENTS

***11B*-202 Existing buildings and facilities**

11B*-202.4 *Path of travel requirements in* alterations*, additions and structural repairs. *…*

Exceptions:

1. *…*
2. *…*
3. *…*
4. *…*
5. *…*
6. *…*
7. *…*

8. *When the adjusted construction cost is less than or equal to the current valuation threshold, as defined in Chapter 2, Section 202, the cost of compliance with Section 11B-202.4 shall be limited to 20 percent of the adjusted construction cost of alterations, structural repairs or additions. When the cost of full compliance with Section 11B-202.4 would exceed 20 percent, compliance shall be provided to the greatest extent possible without exceeding 20 percent.*

When the adjusted construction cost exceeds the current valuation threshold, as defined in Chapter 2, Section 202, and the enforcing agency determines the cost of compliance with Section 11B-202.4 is an unreasonable hardship, as defined in Chapter 2, Section 202, full compliance with Section 11B-202.4 shall not be required. Compliance shall be provided by equivalent facilitation or to the greatest extent possible without creating an unreasonable hardship; but in no case shall the cost of compliance be less than 20 percent of the adjusted construction cost of alterations, structural repairs or additions. The details of the finding of unreasonable hardship shall be recorded and entered into the files of the enforcing agency and shall be subject to Chapter 1, Section 1.9.1.5, Special Conditions for Persons with Disabilities Requiring Appeals Action Ratification.

For the purposes of this exception, the adjusted construction cost of alterations, structural repairs or additions shall not include the cost of alterations to path of travel elements required to comply with Section 11B-202.4.

In choosing which accessible elements to provide, priority should be given to those elements that will provide the greatest access in the following order:

1. *An accessible entrance;*
2. *An accessible route to the altered area;*
3. *At least one accessible restroom for each sex;*
4. *Accessible telephones;*
5. *Accessible drinking fountains; and*
6. *When possible, additional accessible elements such as parking, <u>signs,</u> storage and alarms.*

If an area has been altered without providing an accessible path of travel to that area, and subsequent alterations of that area or a different area on the same path of travel are undertaken within three years of the original alteration, the total cost of alterations to the areas on that path of travel during the preceding three-year period shall be considered in determining whether the cost of making that path of travel accessible is disproportionate.

9. *…*

ITEM 11B.03

DIVISION 2: SCOPING REQUIREMENTS

***11B*-203 General Exceptions**

***11B*-203.9 Employee ~~work areas~~ *workstations*.** *Employee workstations shall be on an accessible route complying with Division 4.* Spaces and elements within employee ~~work areas~~ *workstations* shall only be required to comply with *Sections* ~~*11B-206.2.8,*~~ *11B*-207.1, ~~and~~ *11B*-215.3*, 11B-302, 11B-303, 11B-404.2.3. Common use circulation paths within employee workstations shall comply with Section 11B-206.2.8.* ~~and shall be designed and constructed so that individuals with disabilities can approach, enter, and exit the employee work area.~~

ITEM 11B.04

DIVISION 2: SCOPING REQUIREMENTS

***11B*-206 Accessible routes**
***11B*-206.4 Entrances.** …

***11B*-206.4.1 Entrances *and exterior ground floor exits*.** *All* entrances *and exterior ground-floor exits to buildings and facilities* shall comply with *Section 11B*-404.

Exceptions:

1. *…*
2. *Exits in excess of those required by Chapter 10, and which are more than 24 inches (610 mm) above grade shall not be required to comply with Section 11B-404. Directional signage shall comply with Chapter 10, Section 1007.10.* ~~*Such doors shall have warning signs complying with Section 11B-703.5, stating that they are not accessible.*~~

ITEM 11B.05

DIVISION 2: SCOPING REQUIREMENTS

***11B*-208 Parking spaces**
***11B*-208.2 Minimum number.** …
***11B*-208.2.3 Residential facilities.** …
***11B*-208.2.3.1 Parking for residents.** …
***11B*-208.2.3.2 Additional parking spaces for residents.** …
***11B*-208.2.3.3 Parking for guests, employees, and other non-residents.** …

~~***11B-208.2.3.4 Requests for accessible parking spaces.***~~

NOTE: *When assigned parking is provided, Chapter 11A indicates designated accessible parking for the adaptable residential dwelling units shall be provided on request of residents with disabilities on the same terms and with the full range of choices (e.g., off-street parking, carport or garage) that are available to other residents.*

ITEM 11B.06

DIVISION 2: SCOPING REQUIREMENTS

***11B*-211 Drinking fountains**

***11B*-211.2 Minimum number.** No fewer than two drinking fountains shall be provided. *When provided,* ~~One~~ *one* drinking fountain shall comply with *Sections 11B*-602.1 through *11B*-602.6*, 11B-602.8 and 11B-602.9.* and one drinking fountain shall comply with ~~*Section*~~ *Sections 11B*-602.7 *and 11B-602.9*.

Exception: Where a single drinking fountain complies with *Sections 11B*-602.1 through ~~*11B*-602.6 and *11B*-602.7~~ *11B-602.9,* it shall be permitted to be substituted for two separate drinking fountains.

***11B*-211.3 More than minimum number.** Where more than the minimum number of drinking fountains specified in *Section 11B*-211.2 are provided, 50 percent of the total number of drinking fountains provided shall comply with *Sections 11B*-602.1 through *11B*-602.6*, 11B-602.8 and 11B-602.9*, and 50 percent of the total number of drinking fountains provided shall comply with ~~*Section*~~ *Sections 11B*-602.7 *and 11B-602.9*.

Exception: Where 50 percent of the drinking fountains yields a fraction, 50 percent shall be permitted to be rounded up or down provided that the total number of drinking fountains complying with *Section 11B*-211 equals 100 percent of drinking fountains.

ITEM 11B.07

DIVISION 2: SCOPING REQUIREMENTS

***11B*-213 Toilet facilities and bathing facilities**

***11B*-213.3 Plumbing fixtures and accessories.** ...

***11B*-213.3.1 Toilet compartments.** Where toilet compartments are provided, at least *five percent but no fewer than* one toilet compartment shall comply with *Section 11B*-604.8.1. In addition to the ~~compartment~~ *compartments* required to comply with *Section 11B*-604.8.1, ~~at least one compartment shall comply with *Section 11B*-604.8.2~~ where six or more toilet compartments are provided, or where the combination of urinals and water closets totals six or more fixtures*, toilet compartments complying with Section 11B-604.8.2 shall be provided in the same quantity as the toilet compartments required to comply with Section 11B-604.8.1*.

***11B*-213.3.2 Water closets.** Where water closets are provided, at least *five percent but no fewer than* one shall comply with *Section 11B*-604.

***11B*-213.3.3 Urinals.** Where *one or more urinals are* provided, at least *ten percent but no fewer than* one shall comply with *Section 11B*-605.

***11B*-213.3.4 Lavatories.** Where lavatories are provided, at least ~~*five*~~ *ten percent but no fewer than* one shall comply with *Section 11B*-606 and shall not be located in a toilet compartment.

ITEM 11B.08

DIVISION 2: SCOPING REQUIREMENTS

11B*-215 Fire alarm systems *and carbon monoxide alarm systems

***11B*-215.1 General.** Where fire alarm systems *and carbon monoxide alarm systems* provide audible alarm coverage, alarms shall comply with *Section 11B*-215.

Exception: In existing facilities, visible alarms *for fire alarm systems* shall not be required except where an existing fire alarm system is upgraded or replaced, or a new fire alarm system is installed.

***11B*-215.2 Public and common use areas.** ...

***11B*-215.3 Employee work areas.** ...

***11B*-215.4 Transient lodging.** Guest rooms required to comply with *Section 11B*-224.4 shall provide *fire* alarms complying with *Chapter 9, Section 907.5.2.3.3, and carbon monoxide alarms, where provided, complying with Chapter 4.*

***11B*-215.5 Residential facilities.** Where provided in residential dwelling units required to comply with *Section 11B*-809.5, *fire* alarms shall comply with *Chapter 9, Section 907.5.2.3.4 and carbon monoxide alarms shall comply with Chapter 4.*

RELATED ITEM 11B.08.1

***11B*-806 Transient lodging guest rooms**

***11B*-806.3 Guest rooms with communication features.** Guest rooms required to provide communication features shall comply with *Section 11B*-806.3.

***11B*-806.3.1 Alarms.** Where emergency warning systems are provided, *fire* alarms *shall* comply~~ing~~ with *Section 11B*-702 ~~shall be provided~~ *and carbon monoxide alarms shall comply with Chapter 4.*

RELATED ITEM 11B.08.2

***11B*-809 Residential dwelling units**

***11B*-809.5 Residential dwelling units with communication features.** Residential dwelling units required to provide communication features shall comply with *Section 11B*-809.5.

***11B*-809.5.1 Building fire alarm system.** …

***11B*-809.5.2 Residential dwelling unit smoke detection system *and carbon monoxide detection system*.** Residential dwelling unit smoke detection systems shall comply with *Chapter 9, Section 907.2.11*. *Residential dwelling unit carbon monoxide detection systems shall comply with Chapter 4.*

***11B*-809.5.2.1 Activation.** All visible alarm appliances provided within the residential dwelling unit for smoke detection notification shall be activated upon smoke detection. *All visible alarm appliances provided within the residential dwelling unit for carbon monoxide detection notification shall be activated upon carbon monoxide detection.*

***11B*-809.5.3 Interconnection.** The same visible alarm appliances shall be permitted to provide notification of residential dwelling unit smoke detection*,* ~~and~~ building fire alarm activation*, and carbon monoxide detection*.

***11B*-809.5.4 Prohibited use.** Visible alarm appliances used to indicate residential dwelling unit smoke detection*, carbon monoxide detection,* or building fire alarm activation shall not be used for any other purpose within the residential dwelling unit.

RELATED ITEM 11B.08.3

WITHDRAWN

RELATED ITEM 11B.08.4

WITHDRAWN

ITEM 11B.09

DIVISION 2: SCOPING REQUIREMENTS

***11B*-216 Signs**

***11B*-216.5 Parking.** *Signs identifying parking spaces and signs within parking facilities shall comply with Section 11B-216.5.*

11B-216.5.1 Parking spaces. Parking spaces complying with *Section 11B*-502 shall be identified by signs complying with *Section 11B*-502.6.

Exceptions:

1. ***Reserved.***
2. In residential facilities, where parking spaces are assigned to specific residential dwelling units, identification of accessible parking spaces shall not be required.

11B-216.5.2 Parking facilities. *Signs intended for use by pedestrians within parking facilities, including directional or informational signs indicating parking sections or levels, shall comply with the requirements of Section 11B-216.*

RELATED ITEM 11B.09.1

***11B*-216 Signs**

***11B*-216.1 General.** *New or altered signs* shall be provided in accordance with *Section 11B*-216 and shall comply with *Section 11B*-703. *The addition of or replacement of signs shall not trigger any additional path of travel requirements.*

Exceptions:

1. ...
2. ***Reserved.*** ~~In parking facilities, signs *provided solely for the operation of vehicles* shall not be required to comply with *Sections 11B*-216.2, *11B*-216.3, and *11B*-216.6 through *11B*-216.12.~~
3. ...
4. ...

ITEM 11B.10

WITHDRAWN

ITEM 11B.11

DIVISION 2: SCOPING REQUIREMENTS

***11B*-216 Signs**

***11B*-216.8 Toilet rooms and bathing rooms.** ~~*Doorways leading*~~ *Entrances to toilet rooms and bathing rooms* ~~*complying with Section 11B-603*~~ *shall be identified by a geometric symbol complying with Section 11B-703.7.2.6.* Where existing toilet rooms or bathing rooms do not comply with *Section 11B*-603, directional signs indicating the location of the nearest toilet room or bathing room complying with *Section 11B*-603 within the facility shall be provided. Signs shall comply with *Section 11B*-703.5 and shall include the International Symbol of Accessibility complying with *Section 11B*-703.7.2.1. Where existing toilet rooms or bathing rooms do not comply with *Section 11B*-603, the toilet rooms or bathing rooms complying with *Section 11B*-603 shall be identified by the International Symbol of Accessibility complying with *Section 11B*-703.7.2.1. Where clustered single user toilet rooms or bathing facilities are permitted to use exceptions to *Section 11B*-213.2, toilet rooms or bathing facilities complying with *Section 11B*-603 shall be identified by the International Symbol of Accessibility complying with *Section 11B*-703.7.2.1 unless all toilet rooms and bathing facilities comply with *Section 11B*-603. *Existing buildings that have been remodeled to provide specific toilet rooms or bathing rooms for public use that comply with these building standards shall have the location of and the directions to these rooms posted in or near the building lobby or entrance on a sign complying with Section 11B-703.5, including the International Symbol of Accessibility complying with Section 11B-703.7.2.1.*

ITEM 11B.12

DIVISION 2: SCOPING REQUIREMENTS

***11B*-221 Assembly areas**

***11B*-221.3 Companion seats.** At least one companion seat complying with *Section 11B*-802.3 shall be provided ~~for~~ *immediately adjacent to* each wheelchair space required by *Section 11B*-221.2.1.

ITEM 11B.13

DIVISION 2: SCOPING REQUIREMENTS

***11B*-221 Assembly areas**
***11B*-221.2 Wheelchair spaces.** …
***11B*-221.2.1 Number and location.** …
***11B*-221.2.2 Integration.** …
***11B*-221.2.3 Lines of sight and dispersion.** …
11B-221.2.4 Temporary structures. …

~~***11B-221.2.5 Removable chairs.***~~

NOTE: *When required wheelchair spaces are not occupied by persons eligible for those spaces, individual, removable seats may be placed in those spaces.*

ITEM 11B.14

DIVISION 2: SCOPING REQUIREMENTS

***11B*-224 Transient lodging guest rooms**

***11B*-224.1 General.** *Hotels, motels, inns, dormitories, resorts and similar transient* lodging facilities shall provide guest rooms in accordance with *Section 11B*-224.

11B-224.1.4 Housing at a place of education. *Housing at a place of education subject to this section shall comply with Sections 11B-224 and 11B-806 for transient lodging guest rooms. For the purposes of the application of this section, the term "sleeping room" is interchangeable with "guest room" as used in the transient lodging standards.*

EXCEPTIONS:

1. *…*
2. *…*
3. *~~Residential dwelling units~~ Housing facilities that are provided by or on behalf of a place of education, with residential dwelling units ~~which are~~ leased on a year round basis exclusively to graduate students or faculty, and that do not contain any public use or common use areas available for educational programming, are not subject to Section 11B-224 and shall comply with ~~Sections~~ Section 11B-233 ~~and 11B-809~~.*
   (IN ADDITION TO THE CHANGES SHOWN ABOVE, EXCEPTION 3 IS BEING RELOCATED TO 11B-224.7, EXCEPTION -- SEE ITEM 11B.15)

_ _

RELATED ITEM 11B.14.1

11B-233 Residential facilities

11B-233.3.6 Graduate student and faculty housing at a place of education. *~~Residential dwelling units~~ Housing facilities that are provided by or on behalf of a place of education, with residential dwelling units ~~which are~~ leased on a year round basis exclusively to graduate students or faculty, and that do not contain any public use or common use areas available for educational programming, are not subject to Section 11B-224 and shall comply with ~~Sections~~ Section 11B-233 ~~and 11B-809~~.*

ITEM 11B.15

DIVISION 2: SCOPING REQUIREMENTS

11B*-224 Transient lodging guest rooms*, *housing at a place of education and social service center establishments.

***11B*-224.1 General.** *Hotels, motels, inns, dormitories, resorts and similar transient* lodging facilities shall provide guest rooms in accordance with *~~Section 11B-224.~~ Sections 11B-224.1 through 11B-224.6.*

***11B*-224.1.1 Alterations. …..**

***11B*-224.1.2 Guest room doors and doorways. …..**

11B-224.1.3 Range of accommodations. …..

(LANGUAGE FROM SECTION 11B-224.1.4 IS BEING REORGANIZED & RELOCATED TO 11B-224.7)

~~11B-224.1.4 Housing at a place of education.~~ *~~Housing at a place of education subject to this section shall comply with Sections 11B-224 and 11B-806 for transient lodging guest rooms. For the purposes of the application of this section, the term "sleeping room" is interchangeable with "guest room" as used in the transient lodging standards.~~*

~~***Exceptions:***~~

1. ~~*Kitchens within housing units containing accessible sleeping rooms with mobility features (including suites and clustered sleeping rooms) or on floors containing accessible sleeping rooms with mobility features shall provide turning spaces that comply with Section 11B-809.2.2 and kitchen work surfaces that comply with Section 11B-804.3.*~~

2. ~~*Multi-bedroom housing units containing accessible sleeping rooms with mobility features shall have an accessible route throughout the unit in compliance with Section 11B-809.2.*~~

3. ~~*Residential dwelling units that are provided by or on behalf of a place of education, which are leased on a year round basis exclusively to graduate students or faculty, and do not contain any public use or common use areas available for educational programming, are not subject to the transient lodging standards and shall comply with Sections 11B-233 and 11B-809.*~~

(LANGUAGE FROM SECTION 11B-224.1.5 IS BEING RELOCATED TO 11B-224.8)

~~***11B-224.1.5 Social service center establishments.*** *Group homes, halfway houses, shelters, or similar social service center establishments that provide either temporary sleeping accommodations or residential dwelling units subject to this section shall comply with this chapter.*~~

~~***11B-224.1.5.1 More than twenty-five bed sleeping rooms.*** *In sleeping rooms with more than twenty-five beds, a minimum of 5 percent of the beds shall have clear floor space complying with Section 11B-806.2.3.*~~

~~***11B-224.1.5.2 More than fifty bed facilities.*** *Facilities with more than fifty beds that provide common use bathing facilities, shall provide at least one roll-in shower with a seat that complies with Section 11B-608. When separate shower facilities are provided for men and women, at least one roll-in shower shall be provided for each group.*~~

(LANGUAGE FROM SECTION 11B-224.1.6 IS BEING RENUMBERED AS 11B-224.1.4)

~~***11B-224.1.6***~~ ***11B-224.1.4 Guest room toilet and bathing rooms.*** *Where toilet and bathing rooms are provided in guest rooms that are not required to provide mobility features complying with Section 11B-806.2, toilet and bathing fixtures shall only be required to comply with Section 11B-603.6.*

***11B*-224.2 Guest rooms with mobility features. …..**

***11B*-224.3 Beds. …..**

***11B*-224.4 Guest rooms with communication features. …..**

***11B*-224.5 Dispersion. …..**

11B-224.6 Storage. …..

(REORGANIZED AND RELOCATED FROM 11B-224.1.4)

11B-224.7 Housing at a place of education. *Housing at a place of education subject to this section shall comply with Sections 11B-224.1 through 11B-224.6 and 11B-806 for transient lodging guest rooms. For the purposes of the application of this section, the term "sleeping room" is interchangeable with "guest room" as used in the transient lodging standards.*

(RELOCATED FROM 11B-224.1.4, EXCEPTION 3 -- SEE ITEM 11B.14)
Exception: *~~3. Residential dwelling units~~ Housing facilities that are provided by or on behalf of a place of education, with residential dwelling units ~~which are~~ leased on a year round basis exclusively to graduate students or faculty, and that do not contain any public use or common use areas available for educational programming, are not subject to Section 11B-224 and shall comply with ~~Sections~~ Section 11B-233 ~~and 11B-809~~.*

11B-224.7.1 Multi-bedroom housing units with mobility features. *Multi-bedroom housing units containing accessible sleeping rooms with mobility features shall have an accessible route throughout the unit in compliance with Section 11B-809.2. Kitchens, when provided, within housing units containing accessible sleeping rooms with mobility features shall comply with Section 11B-804.*

11B-224.7.2 Multi-bedroom housing units with adaptable features. *Multi-bedroom housing units with adaptable features shall be provided as required by Section 11B-233.3.1.2. The number of required multi-bedroom housing units with adaptable features shall be reduced by the number of multi-bedroom housing units with mobility features required by Section 11B-224.2.*

(RELOCATED FROM 11B-224.1.5)
11B-224.8 Social service center establishments. *Group homes, halfway houses, shelters, or similar social service center establishments that provide either temporary sleeping accommodations or residential dwelling units subject to this section shall comply with Sections 11B-224.1 through 11B-224.6 and Section 11B-233.3.*

11B-224.8.1 More than twenty-five bed sleeping rooms. *In sleeping rooms with more than twenty-five beds, a minimum of 5 percent of the beds shall have clear floor space complying with Section 11B-806.2.3.*

11B-224.8.2 More than fifty bed facilities. *Facilities with more than fifty beds that provide common use bathing facilities, shall provide at least one roll-in shower with a seat that complies with Section 11B-608. When separate shower facilities are provided for men and women, at least one roll-in shower shall be provided for each group.*

_ _
RELATED ITEM 11B.15.1
CHAPTER 2
Definition of MULTI-BEDROOM HOUSING UNIT

MULTI-BEDROOM HOUSING UNIT. [DSA-AC] *A housing unit, intended for use by students at a place of education, with a kitchen and/or toilet and bathing rooms within the unit, such as an apartment, or dormitory. Multi-bedroom housing units are separate from one another and from common use spaces within a building.*

ITEM 11B.16

DIVISION 2: SCOPING REQUIREMENTS

***11B*-226 Dining surfaces and work surfaces**

11B-226.3 Dining surfaces exceeding 34 inches in height. *Where ~~food or drink is served for consumption at~~ a counter dining surface exceeding 34 inches (864 mm) in height is provided for the consumption of food or drink, a portion of the main counter dining surface 60 inches (1525 mm) minimum in length shall be provided in compliance with Section ~~11B-902.3~~ 11B-902.*

ITEM 11B.17

DIVISION 2: SCOPING REQUIREMENTS

***11B*-226 Dining surfaces and work surfaces**

11B-226.4 Baby changing tables. *Baby changing tables shall comply with Sections 11B-309 and 11B-902. Baby changing tables when deployed shall not obstruct the required width of an accessible route except as allowed by Section 11B-307.2. Baby changing tables shall not be located in toilet compartments complying with Section 11B-604.8 within a multiple accommodation toilet facility.*

RELATED ITEM 11B.17.1

***11B*-603 Toilet and bathing rooms**

11B-603.5 Accessories. *Where towel or sanitary napkin dispensers, waste receptacles, or other accessories are provided in toilet facilities, at least one of each type shall be located on an accessible route. All operable parts, including coin slots, shall be 40 inches (1016 mm) maximum above the finish floor.*

Exception: *Baby changing tables are not required to comply with Section 11B-603.5.*

ITEM 11B.18

DIVISION 2: SCOPING REQUIREMENTS

***11B*-227 Sales and service**

***11B*-227.2 Check-out aisles.** Where check-out aisles are provided, check-out aisles complying with *Section 11B*-904.3 shall be provided in accordance with Table *11B*-227.2. Where check-out aisles serve different functions, check-out aisles complying with *Section 11B*-904.3 shall be provided in accordance with Table *11B*-227.2 for each function. Where check-out aisles are dispersed throughout the building or facility, check-out aisles complying with *Section 11B*-904.3 shall be dispersed. ~~*When check-out aisles are open for customer use, a minimum of one accessible check-out aisle shall always be available. As check-out aisles are opened and closed based on fluctuating customer levels, the number of accessible check-out aisles available shall comply with Table 11B-227.2.*~~ *When not all check-out aisles are accessible, accessible check-out aisles shall be identified by a sign complying with Section 11B-904.3.4.*

NOTE: *Operational procedures are often necessary to ensure the Americans with Disabilities Act accessibility requirements are met. When check-out aisles are open for customer use, the business should ensure that a minimum of one accessible check-out aisle is always available for use by persons with disabilities. As check-out aisles are opened and closed based on fluctuating customer levels, the business should ensure that the number of accessible check-out aisles available complies with Table 11B-227.2.*

Exception: *In existing buildings, where* the selling space is under 5000 square feet (465 m^2) no more than one check-out aisle complying with *Section 11B*-904.3 shall be required.

Table *11B*-227.2 Check-Out Aisles

Number of Check-Out Aisles of Each Function	Minimum Number of Check-Out Aisles of Each Function Required to Comply with *11B*-904.3
1 to 4	1
5 to 8	2
9 to 15	3
16 and over	3, plus 20 percent of additional aisles

ITEM 11B.19

DIVISION 2: SCOPING REQUIREMENTS

***11B*-233 Residential facilities**

11B*-233.2 *Reserved. ~~**Residential dwelling units provided by entities subject to HUD Section 504 Regulations.** Where *public housing* facilities with residential dwelling units are provided by entities subject to regulations issued by the Department of Housing and Urban Development (HUD) under Section 504 of the Rehabilitation Act of 1973, as amended, such entities shall provide residential dwelling units with mobility features complying with *Sections 11B*-809.2 through *11B*-809.4 in a number required by the applicable HUD regulations. Residential dwelling units required to provide mobility features complying with *Sections 11B*-809.2 through *11B*-809.4 shall be on an accessible route as required by *Section 11B*-206. In addition, such entities shall provide residential dwelling units with communication features complying with *Section 11B*-809.5 in a number required by the applicable HUD regulations. Entities subject to *Section 11B*-233.2 shall not be required to comply with *Section 11B*-233.3.~~

RELATED ITEM 11B.19.1

Chapter 2
Definition of PUBLIC HOUSING

PUBLIC HOUSING. [DSA-AC] ~~*Housing facilities owned and/or operated by, for or on behalf of a public entity including but not limited to the following:*~~ *Housing facilities owned, operated, or constructed by, for or on behalf of a public entity including but not limited to the following:*

1. *Publically owned and/or operated one- or two- family dwelling units or congregate residences;*

2. *Publically owned and/or operated buildings or complexes with three or more residential dwellings units;*

3. *Reserved.* ~~*Publically owned and/or operated housing provided by entities subject to regulations issued by the United States Department of Housing and Urban Development under Section 504 of the Rehabilitation Act of 1973 as amended;*~~

4. *Publically owned and/or operated homeless shelters, group homes and similar social service establishments;*

5. *Publically owned and/or operated transient lodging, such as hotels, motels, hostels and other facilities providing accommodations of a short term nature of not more than 30 days duration;*

6. *Housing at a place of education owned or operated by a public entity, such as housing on or serving a public school, public college or public university campus;*

7. *Privately owned housing made available for public use as housing.*

ITEM 11B.20

DIVISION 2: SCOPING REQUIREMENTS

***11B*-233 Residential facilities**

11B*-233.3 *Public housing facilities. **~~Residential dwelling units provided by entities not subject to HUD Section 504 Regulations.~~** *Public housing facilities* with residential dwelling units ~~provided by entities not subject to regulations issued by the Department of Housing and Urban Development (HUD) under Section 504 of the Rehabilitation Act of 1973, as amended,~~ shall comply with *Section 11B*-233.3.

ITEM 11B.21

DIVISION 3: BUILDING BLOCKS

***11B*-305 Clear floor or ground space**

***11B*-305.6 Approach.** One full unobstructed side of the clear floor or ground space shall adjoin an accessible route or adjoin another clear floor or ground space. *Clear floor or ground space may overlap an accessible route, unless specifically prohibited elsewhere in this chapter.*

ITEM 11B.22

WITHDRAWN

ITEM 11B.23

DIVISION 3: BUILDING BLOCKS

***11B*-307 Protruding objects**

***11B*-307.4 Vertical clearance.** Vertical clearance shall be 80 inches (2032 mm) high minimum. Guardrails or other barriers shall be provided where the vertical clearance is less than 80 inches (2032 mm) high. The leading edge of such guardrail or barrier shall be located 27 inches (686 mm) maximum above the finish floor or ground. ~~Where a guy support is used parallel to a circulation path, including but not limited to sidewalks, a guy brace, sidewalk guy or similar device shall be used to prevent an overhanging obstruction.~~

Exception: Door closers and door stops shall be permitted to be 78 inches (*1981* mm) minimum above the finish floor or ground.

11B-307.4.1 Guy braces. *Where a guy support is used within either the width of a circulation path or 24 inches maximum outside of a circulation path, a vertical guy brace, sidewalk guy or similar device shall be used to prevent a hazard or an overhead obstruction.*

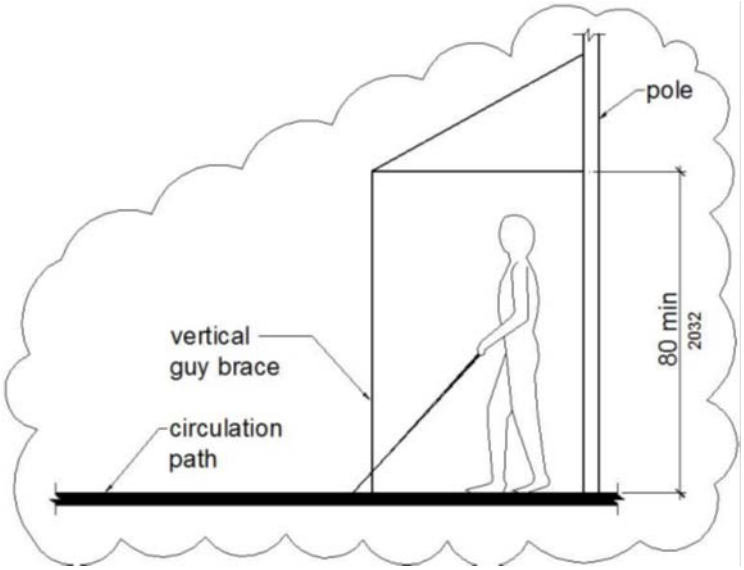

Figure 11B-307.4.1
Guy Braces

ITEM 11B.24

DIVISION 3: BUILDING BLOCKS

***11B*-308 Reach ranges**

***11B*-308.1 General.** Reach ranges shall comply with *Section 11B*-308.
11B-308.2 Forward reach. …
11B-308.3 Side reach. …

11B-308.4 Suggested reach ranges for children. *Where building elements such as coat hooks, lockers, or operable parts are designed for use primarily by children, the suggested dimensions of Table 11B-308.4 may be used. These dimensions apply to either forward or side reaches.*

Table 11B-308.4 Suggested Dimensions for Children's Use

Suggested Reach Ranges for Children Ages 3 through 12			
Forward or Side Reach	***Ages 3 and 4***	***Ages 5 through 8***	***Ages 9 through 12***
High (maximum)	*36 in (915 mm)*	*40 in (1015 mm)*	*44 in (1120 mm)*
Low (minimum)	*20 in (510 mm)*	*18 in (455 mm)*	*16 in (405 mm)*

ITEM 11B.25

DIVISION 4: ACCESSIBLE ROUTES

***11B*-403 Walking surfaces**
***11B*-403.5 Clearances.** …

***11B*-403.5.1 Clear width.** Except as provided in *Sections 11B*-403.5.2 and *11B*-403.5.3, the clear width of walking surfaces shall be 36 inches (*914* mm) minimum.

Exceptions:

1. ...
2. ...
3. ...
4. ...
5. *The clear width for accessible routes to accessible toilet compartments shall be 44 inches (1118 mm) except for door-opening widths and door swings.*

ITEM 11B.26

DIVISION 4: ACCESSIBLE ROUTES

***11B*-404 Doors, doorways, and gates**
***11B*-404.2 Manual doors, doorways, and manual gates.** ...

***11B*-404.2.3 Clear width.** Door openings shall provide a clear width of 32 inches (*813* mm) minimum. Clear openings of doorways with swinging doors shall be measured between the face of the door and the stop, with the door open 90 degrees. Openings more than 24 inches (610 mm) deep shall provide a clear opening of 36 inches (*914* mm) minimum. There shall be no projections into the required clear opening width lower than 34 inches (*864* mm) above the finish floor or ground. Projections into the clear opening width between 34 inches (*864* mm) and 80 inches (*2032* mm) above the finish floor or ground shall not exceed 4 inches (*102* mm).

EXCEPTIONS:

1. **…**
2. **…**
3. ~~*Doors, doorways, and gates not providing full user passage shall provide a clear width of 20 inches (510 mm) minimum.*~~

ITEM 11B.27

DIVISION 4: ACCESSIBLE ROUTES

***11B*-404 Doors, doorways, and gates**

***11B*-404.2 Manual doors, doorways, and manual gates.** …

***11B*-404.2.9 Door and gate opening force.** The force for pushing or pulling open a door or gate ~~other than fire doors~~ shall be as follows:

1. Interior hinged doors and gates: 5 pounds (22.2 N) maximum.

2. Sliding or folding doors: 5 pounds (22.2 N) maximum.

3. *Required fire doors: the minimum opening force allowable by the appropriate administrative authority, not to exceed 15 pounds (66.7 N).*

4. *Exterior hinged doors: 5 pounds (22.2 N) maximum.*

These forces do not apply to the force required to retract latch bolts or disengage other devices that hold the door or gate in a closed position.

Exceptions:

1. *…*
2. *…*

ITEM 11B.28

DIVISION 4: ACCESSIBLE ROUTES

***11B*-406 Curb ramps, blended transitions and islands**

11B-406.5 Common requirements. *…*

11B-406.5.8 Counter slope. *Counter slopes of adjoining gutters and road surfaces immediately adjacent to and within 24 inches (610 mm) of the curb ramp shall not be steeper than 1:20. The adjacent surfaces at transitions at curb ramps to walks, gutters, and streets shall be at the same level.*

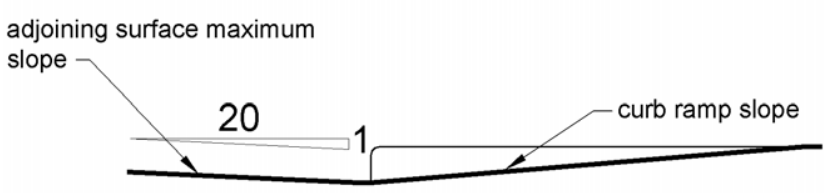

Figure ~~*11B-406.5.7*~~ *11B-406.5.8*
Counter Slope of Surfaces Adjacent to Curb Ramps

ITEM 11B.29

DIVISION 4: ACCESSIBLE ROUTES

***11B*-406 Curb ramps, blended transitions and islands**

11B-406.5.11 Reserved. ~~***Grooved border.*** *Curb ramps shall have a grooved border 12 inches (305 mm) wide along the top of the curb ramp at the level surface of the top landing and at the outside edges of the flared sides. The grooved border shall consist of a series of grooves ¼ inch (6.4 mm) wide by ¼ inch (6.4 mm) deep, at ¾ inch (19 mm) on center.~~

~~***Exceptions:***~~

1. ~~*At parallel curb ramps, the grooved border shall be on the upper approach immediately adjacent to the curb ramp across the full width of the curb ramp.*~~
2. ~~*A grooved border shall not be required at blended transitions.*~~

_ _

RELATED ITEM 11B.29.1

***11B*-406 Curb ramps, blended transitions and islands**

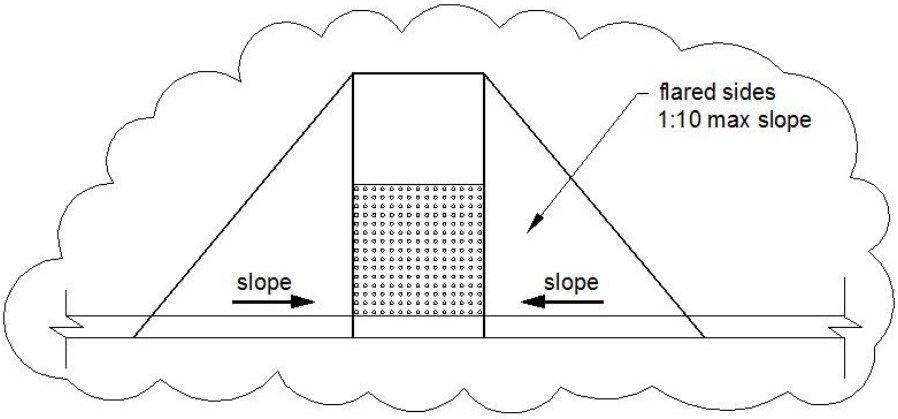

Figure *11B-406.2.2*
Sides of Curb Ramps

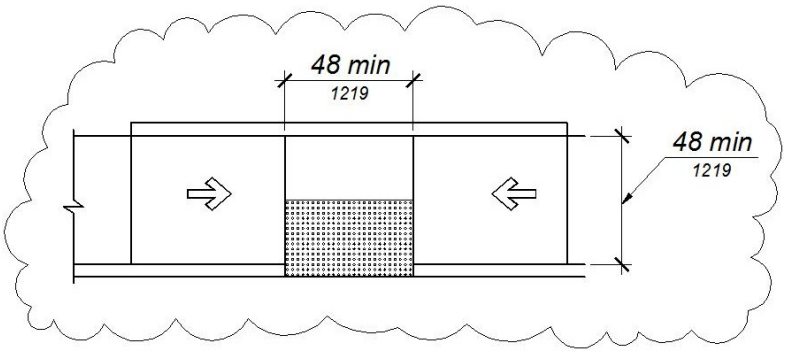

Figure 11B-406.3.2
Parallel Curb Ramps

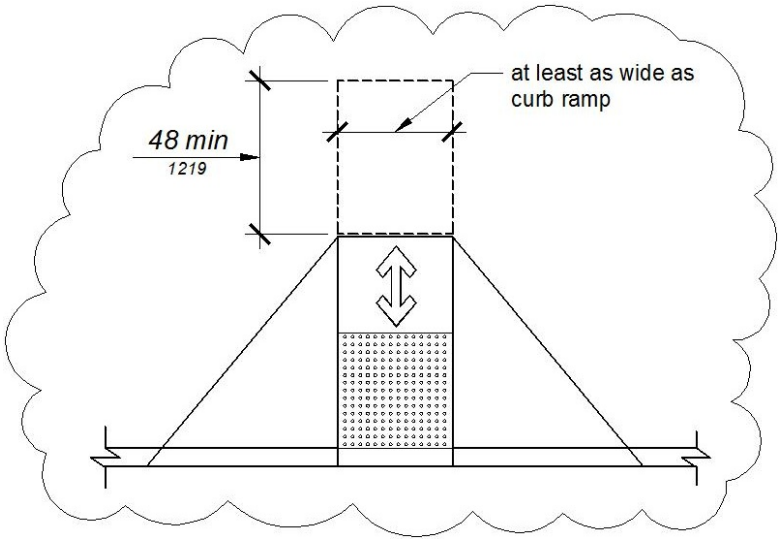

Figure *11B-406.5.3*
Landings at the Top of Curb Ramps

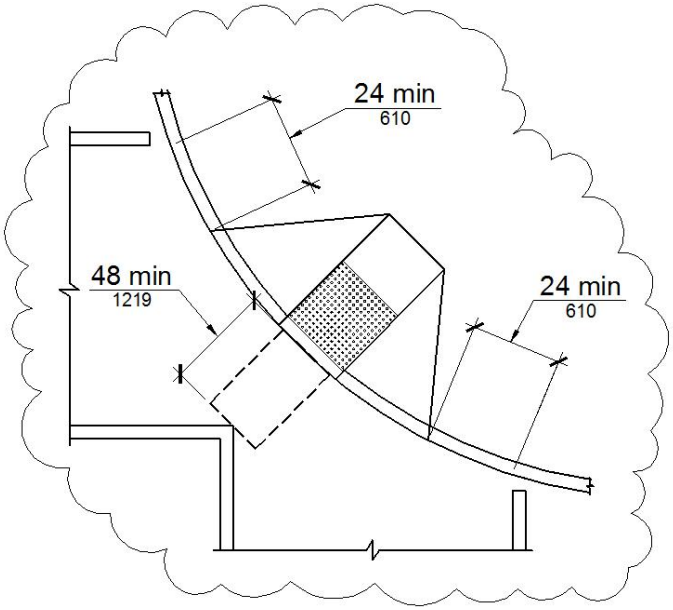

Figure *11B-406.5.10*
Diagonal or Corner Type Curb Ramps

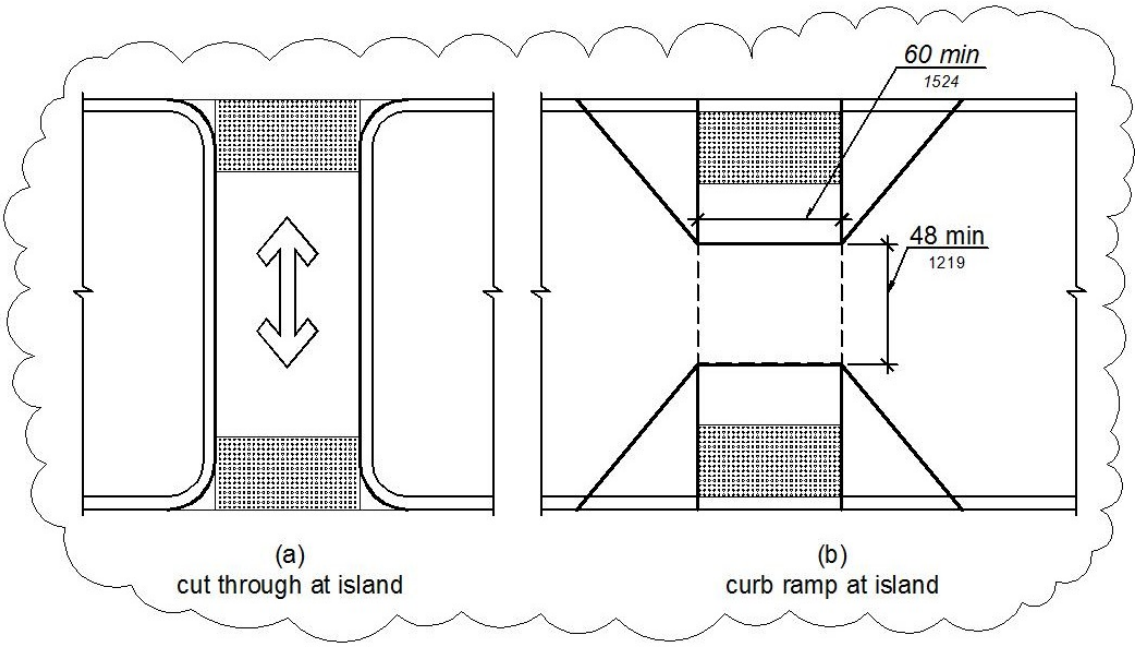

Figure *11B-406.6*
Islands in Crossings

ITEM 11B.30

DIVISION 4: ACCESSIBLE ROUTES

***11B*-407 Elevators**

***11B*-407.4.1 Car dimensions.** Inside dimensions of elevator cars and clear width of elevator doors shall comply with Table *11B*-407.4.1.

> **Exception:** *In existing buildings, where existing shaft configuration ~~or technical infeasibility~~ prohibits strict compliance with Section 11B-407.4.1, existing* elevator car configurations that provide a clear floor area of *18 square feet (1.67 m^2)* minimum and also provide an inside clear depth 54 inches (*1372* mm) minimum and a clear width *48 inches (1219 mm)* minimum shall be permitted.

ITEM 11B.31

DIVISION 4: ACCESSIBLE ROUTES

11B-411 Destination-oriented elevators

11B-411.1 General. *Destination-oriented elevators shall comply with Section 11B-411 and with ASME A17.1. They shall be passenger elevators as classified by ASME A17.1. Elevator operation shall be automatic.*

> ***11B-411.1.1 Floor designations.*** *In facilities served by destination-oriented elevator systems, floor designations shall be numeric characters only. Floor designations shall be "one" (1) or "zero" (0) at the main entry level and shall increase by one for each successive higher story or level. The initial floor below the main entry level shall be designated “minus one” (-1) and the designation for each*

successive lower story or level shall decrease by one. Stories or levels shall not be designated by alphabetic characters.

Exception: *In existing facilities where new elevators are installed or existing elevators are altered into a destination-oriented elevator system, levels within stories, such as mezzanines located above or below the main entry level may be designated with an alpha-numeric character such as "M2", indicating "mezzanine" and the "story number", respectively, in which it is located, provided there is no duplication with alphanumeric designations of elevator cars in the facility.*

11B-411.1.2 Car designations. *Elevator cars shall be designated with a single alphabetic character.*
Exception: *Elevator systems with more than 26 elevators may use alpha-numeric designations such as "A1".*

11B-411.2 Elevator landing requirements. *Elevator landings shall comply with Section 11B-411.2.*

11B-411.2.1 Hall call consoles. *Hall call consoles shall comply with Sections 11B-411.2.1 and 11B-309.*

11B-411.2.1.1 Location. *Hall call consoles shall be wall-mounted. On floors with a building entry, including parking and transfer levels, each hoistway entrance shall be adjacent to a hall call console. On other floors, a minimum of one hoistway entrance shall be adjacent to a hall call console.*

Exception: *Hall call consoles beyond those required by 11B-411.2.1.1 may be provided outside the elevator landing and may be wall-mounted, pedestal-mounted, or mounted on a kiosk or security turnstile.*

11B-411.2.1.2 Required features. *Hall call consoles shall include a touch screen or keypad with display screen where provided, an accessibility function button, and audio output loudspeaker.*

11B-411.2.1.2.1 Keypads. *Keypads shall be in a 12-key ascending telephone keypad layout. Characters and symbols shall be centered on the corresponding button. The number five key shall have a single raised dot. The dot shall have a base diameter of 0.118 inch (3 mm) minimum and 0.120 inch (3.05 mm) maximum and a height of 0.025 inch (0.6 mm) minimum and 0.037 inch (0.9 mm) maximum. Keypads shall have a star (★) on the lower left button and a minus sign (-) on the lower right button. From any level above and below the main egress level, when the star button is pressed an elevator shall be dispatched to the main egress level.*

11B-411.2.1.2.2 Touch screen. *Touch screen display shall comply with Section 11B-411.2.1.2.4. The touch screen shall provide written or visual instruction on the screen as to its use.*

11B-411.2.1.2.3 Accessibility function button. *The accessibility function button shall be identified by the International Symbol of Accessibility and a raised indication. The International Symbol of Accessibility shall comply with Section 11B-703.7.2.1, and shall be 5/8 inch (15.9 mm) minimum in height. The indication shall be three raised dots. Each dot shall have a base diameter of 0.59 inch (1.5 mm) minimum and 0.063 inch (1.6 mm) maximum and a height of 0.025 inch (0.6 mm) minimum and 0.037 inch (0.9 mm) maximum. The dots shall be spaced ¼ inch (6.4 mm), measured center to center, in the form of an equilateral triangle with a vertex pointing up. The accessibility function button shall not be provided with a key repeat function.*

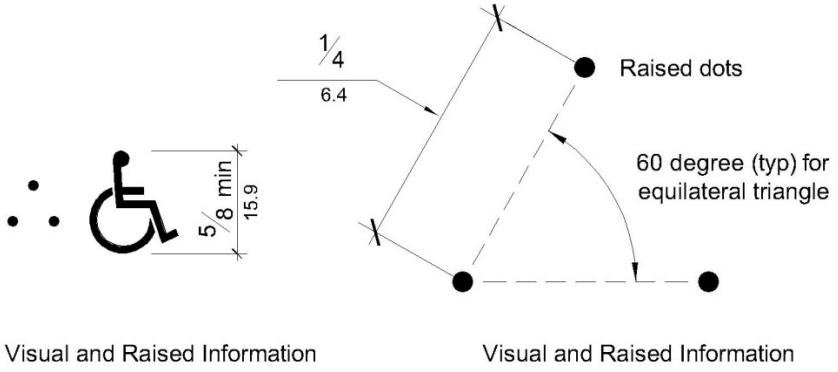

Figure 11B-411.2.1.2.3
Destination-Oriented Elevator Accessibility Function Button Indication

11B-411.2.1.2.4 Display screen*. Upon activation of the accessibility function button, the display screen shall display information including but not limited to user input confirmation, elevator assignment characters, direction to the assigned elevator, and error messages. The display screen shall comply with 11B-411.2.1.2.4.*

11B-411.2.1.2.4.1 Contrast. *Display screens shall provide contrast with light characters and symbols on a dark background or dark characters and symbols on a light background. The background shall be solid and static.*

11B-411.2.1.2.4.2 Size. *Elevator assignment characters shall be 1 inch high (25 mm) minimum.*

11B-411.2.1.2.4.3 Duration. *Elevator assignment characters shall be displayed for a minimum of 5 seconds.*

11B-411.2.1.2.5 Audio output. *Upon activation of the accessibility function button, the audio output shall provide verbal announcements, including but not limited to operating instructions, user input confirmation, announcement of the elevator assignment characters, direction to the assigned elevator, and error messages. Audio output shall be recorded or digitized human speech, and shall be delivered through a loudspeaker. Auditory volume shall be at least 10 dB above ambient sound level, but shall not exceed 80 dB, measured 36 inches (915 mm) in front of the console. At hall call console locations where the ambient sound level varies, auditory volume shall be maintained at the required volume by an automatic gain control or shall be set at not less than 75 dB.*

11B-411.2.1.3 Arrangement. *Hall call console arrangement of required features shall comply with Section 11B-411.2.1.3.*

11B-411.2.1.3.1 Keypad call console arrangement. *The display screen shall be located directly above the keypad. The accessibility function button shall be located directly below the keypad at a height of 36" (915 mm) to 42" (1067 mm) above the finish floor.*

11B-411.2.1.3.2 Touch screen call console arrangement. *The touch screen shall be located directly above the accessibility function button. The accessibility function button shall be located at a height of 36" (915 mm) to 42" (1067 mm) above the finish floor.*

11B-411.2.1.3.3 Proximity of required elements. *Required features shall be provided on a hall call console assembly or as individual elements grouped in close proximity. The top of the hall call console assembly or the top of the touch screen and each control or group of controls shall be sloped away from the user at 15 to 25 degrees from the vertical plane.*

11B-411.2.1.4 Additional features. *Hall call console additional features, if provided, shall comply with 11B-309 and 11B-411.2.1.4.*

11B-411.2.1.4.1 Hall call console additional buttons. *Hall call console buttons provided in addition to the accessibility function button and keypad buttons shall comply with 11B-411.2.1.4.1. Buttons in addition to the accessibility function button are not permitted on hall call consoles using a touch screen.*

11B-411.2.1.4.1.1 Arrangement. *Buttons shall be arranged in columns to the right of the keypad with horizontal spacing 1.5 times minimum the horizontal spacing between the numeric keys and with the same vertical spacing as the numeric keys.*

11B-411.2.1.4.1.2 Identification. *Buttons shall be identified by raised characters and symbols, white on a black background, complying with Section 11B-703.2 and Braille complying with 703.3. Identification shall be placed immediately to the left of the control button to which the designation applies.*

11B-411.2.1.4.2 Security or access controls. *Security or access control system card readers shall be located in close proximity to each hall call console and in a consistent location throughout the facility.*

11B-411.2.1.5 Button requirements. *Keypad buttons, the accessibility function button, and additional hall call console buttons shall comply with 11B-411.2.1.5.*

11B-411.2.1.5.1 Size. *Buttons shall have square shoulders, be 3/4 inch (19.1 mm) minimum in the smallest dimension and shall be raised 1/8 inch (3.2 mm) plus or minus 1/32 inch (0.8 mm) above the surrounding surface. The buttons shall be activated by a mechanical motion that is detectable.*

11B-411.2.1.5.2 Color. *Characters and symbols on buttons, where provided, shall be white on a black background.*

11B-411.2.1.6 Identification of floors served. *In buildings with two or more elevator banks, each serving a different group of specific floors, hall call consoles located on floors with a building entry, including parking and transfer levels, shall be provided with signage complying with Section 11B-703.2, 11B-703.3, and 703.5 on the surface of or above the hall call console stating "FLOORS n1 – n2", where n1 - n2 represents the range of floors served. Characters shall be white on a black background.*

11B-411.2.1.7 Elevator car assignment. *Elevator car assignment shall comply with Section 11B-411.2.1.7.*

11B-411.2.1.7.1 Assignment by keypad hall call console. *When the accessibility function button is pressed the audio output shall provide a verbal announcement of the floors served by the elevator group and an instruction for the user to enter a destination floor. The selected destination floor shall be confirmed by verbal announcement and on the display screen. Verbal and visible indication of an invalid input shall be provided. The display screen shall indicate the elevator assignment characters and a verbal announcement shall be made of the*

assigned elevator responding to the call. Visual and verbal direction to the assigned elevator shall be provided.

11B-411.2.1.7.2 Assignment by touch screen hall call console. *When the accessibility function button is pressed the audio output shall provide a verbal announcement of the floors served by the elevator group and instruction for the user to press the accessibility function button as a response to verbal direction in order to select the destination floor. The selected destination floor shall be confirmed by verbal announcement and on the display screen. Verbal and visible indication of an invalid input shall be provided. The display screen shall indicate the elevator assignment characters and a verbal announcement shall be made of the assigned elevator responding to the call. Visual and verbal direction to the assigned elevator shall be provided.*

Exceptions. *In addition to assignment by Section 11B-411.2.1.7.2, when the accessibility function button is pressed, an option to select an alternative mode of operation may be provided by one of the following options:*

1. *A virtual telephone keypad may be provided. The size of the keypad shall be a nominal 4" wide by 5" high in a 12-key ascending telephone keypad layout centered in the console. Characters and symbols shall be centered on the corresponding button. Keypads shall have a star (★) on the lower left button and a minus sign (-) on the lower right button. Operation shall be by contact with the touch screen with a press on the key. The audio output shall provide user input confirmation after each key is pressed. Keys shall not be provided with a key repeat function. From any level above and below the main egress level, when the star button is pressed an elevator shall be dispatched to the main egress level.*

2. *A gesture-based mode of operation may be provided. Operation shall be by contact with the touch screen, without specific contact with an icon, and using established non-proprietary gestures for selection and input, including but not limited to tapping, sliding, and tap-hold contact-release to select. The audio output shall provide verbal direction on use of the touch screen, and indication of floor selection options until assignment to the elevator is given.*

11B-411.2.1.7.3 Assignment by security credential. *If a security system or other form of access control system is provided, when the accessibility function button is pressed, the audio output shall provide a verbal announcement and direction to the location of the access control activation sensor, such as "present security credential at the sensor immediately to the left". Upon presentation of security credential, the destination floor shall be confirmed by verbal announcement and on the display screen. The display screen shall indicate the elevator assignment characters and a verbal announcement shall be made of the assigned elevator responding to the call. Visual and verbal direction to the assigned elevator shall be provided.*

11B-411.2.1.7.4 Adjacency assignment. *The elevator car immediately to the left or right of the hall call console shall be assigned.*

Exception: *The most adjacent elevator serving the selected floor shall be assigned by hall call consoles located outside the elevator landing.*

11B-411.2.2 Elevator car identification at elevator landings. *Elevator car identification shall comply with Section 11B-411.2.2.*

1B-411.2.2.1 Visible identification. *Above or adjacent to each elevator car entrance there shall be a visible identification fixture with a car designation character. The identification fixture shall be 80 inches (2032 mm) minimum above the finish floor or ground to the bottom of the fixture. The characters on the fixture shall be upper case with a height of 4 (102 mm) inches minimum complying with 11B-703.5.1, 11B-703.5.3, 11B-703.5.4, 11B-703.5.7, and 703.5.8.*

> ***Exception:*** *Existing buildings may have a visible identification fixture with a car designation character adjacent to each elevator car entrance centered at 72 inches (1829 mm) above the finish floor or ground. The character on the fixture shall be upper case with a height of 2 1/2 (64 mm) inches minimum complying with 11B-703.5.1, 11B-703.5.3, 11B-703.5.4, 11B-703.5.7, and 703.5.8.*

11B-411.2.2.2 Verbal identification*. Verbal announcement of the car designation shall be provided at the elevator car entrance upon arrival. Audio output shall be recorded or digitized human speech, and shall be delivered through a loudspeaker. The verbal annunciator shall have a frequency of 300 Hz minimum and 3000 Hz maximum. Auditory volume shall be at least 10 dB above ambient sound level, but shall not exceed 80 dB, measured 36 inches (915 mm) in front of the elevator entrance and at 48" above the floor. At elevator entrances where the ambient sound level varies, auditory volume shall be maintained at the required volume by an automatic gain control or shall be set at not less than 75 dB.*

11B-411.2.3 Signs on jambs of elevator hoistway entrances. *Signs on jambs of elevator hoistway entrances shall comply with Section 11B-411.2.3.*

11B-411.2.3.1 Floor designation signs. *Floor designation signs complying with Sections 11B-703.2 and 11B-703.4.1 shall be provided on both jambs of elevator hoistway entrances. Signs shall be provided in both raised characters and Braille. Raised characters shall be 2 inches (51 mm) high. A raised star placed to the left of the floor designation, shall be provided on both jambs at the main entry level. The outside diameter of the star shall be 2 inches (51 mm) and all points shall be of equal length. Raised characters, including the star, shall be white on a black background. Braille complying with Section 11B-703.3 shall be placed below the corresponding raised characters and the star. The Braille translation for the star shall be "MAIN". Applied plates are acceptable if they are permanently fixed to the jamb.*

11B-411.2.3.2 Car designation signs. *Car designation signs complying with Sections 11B-703.2 and 11B-703.4.1 shall be provided on both jambs of the hoistway immediately below the floor designation. Signs shall be provided in both raised characters and Braille. Raised characters shall be 2 inches (51 mm) high. Raised characters shall be white on a black background. Braille complying with Section 11B-703.3 shall be placed below the corresponding raised characters. Applied plates are acceptable if they are permanently fixed to the jamb.*

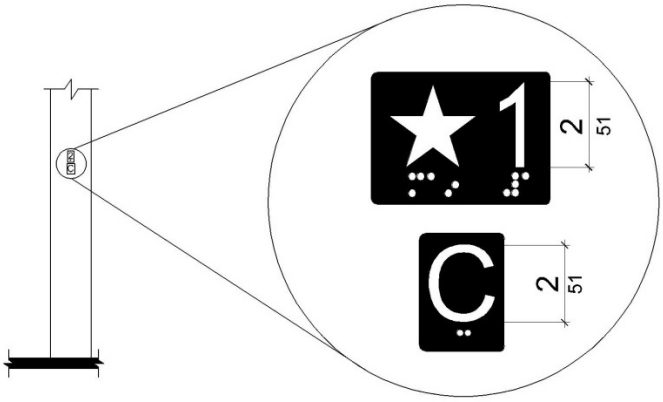

Figure 11B-411.2.3
Floor Designation and Car Designation Signs on Jambs
of Destination-Oriented Elevator Hoistway Signs

11B-411.3 Elevator door requirements. *Hoistway and car doors shall comply with Section 11B-411.3.*

11B-411.3.1 Type. *Elevator door type shall comply with Section 11B-407.3.1.*

11B-411.3.2 Operation. *Elevator hoistway and car doors shall open and close automatically.*

11B-411.3.3 Reopening device. *Elevator doors shall be provided with a reopening device complying with Section 11B-411.3.3 that shall stop and reopen a car door and hoistway door automatically if the door becomes obstructed by an object or person.*

11B-411.3.3.1 Height. *The height of the reopening device shall comply with Section 11B-407.3.3.1.*

11B-411.3.3.2 Contact. *The device contact shall comply with Section 11B-407.3.3.2.*

11B-411.3.3.3 Duration. *The door reopening device duration shall comply with Section 11B-407.3.3.3.*

11B-411.3.4 Door delay. *Door delay shall comply with Section 11B-407.3.5.*

11B-411.3.5 Width. *The width of elevator doors shall comply with Table 11B-407.4.1.*

11B-411.4 Elevator car requirements. *Elevator cars shall comply with Section 11B-411.4.*

11B-411.4.1 Car dimensions. *Inside dimensions of elevator cars and clear width of elevator doors shall comply with Section 11B-407.4.1.*

11B-411.4.2 Floor surfaces. *Floor surfaces in elevator cars shall comply with11B-407.4.2.*

11B-411.4.3 Platform to hoistway clearance. *Platform to hoistway clearance shall comply with Section 11B-407.4.3.*

11B-411.4.4 Leveling. *Elevator car leveling shall comply with Section 11B-407.4.4.*

11B-411.4.5 Illumination. *The level of illumination at the car controls shall comply with Section 11B-407.4.5.*

11B-411.4.6 Elevator car controls. *Where provided, elevator car controls shall comply with Sections 11B-411.4.6 and 11B-309.4.*

11B-411.4.6.1 Location. *Controls shall be located within one of the reach ranges specified in Section 11B-308.*

11B-411.4.6.2 Buttons. *Car control buttons shall comply with Sections 11B-407.4.6.2.1 and 11B-407.4.6.2.4. The car shall not have non-functional, exposed floor buttons.*

11B-411.4.6.3 Emergency controls. *Emergency controls shall comply with Section 11B-407.4.6.4.*

11B-411.4.7 Designations and indicators of car control buttons. *Designations and indicators of car control buttons shall comply with Section 11B-411.4.7.*

11B-411.4.7.1 Type. *Control button type shall comply with Section 11B-407.4.7.1.1.*

11B-411.4.7.2 Location. *Raised characters or symbols and Braille designations shall comply with Section 11B-407.4.7.1.2.*

11B-411.4.7.3 Symbols. *The control button for the emergency stop, alarm, door open, door close, and phone, shall be identified with raised symbols and Braille as shown in Table 11B-407.4.7.1.3.*

11B-411.4.7.4 Button spacing. *Button spacing shall comply with Section 11B-407.4.7.1.5.*

11B-411.4.8 Car position indicators. *Audible and visible car position indicators shall be provided in elevator cars.*

11B-411.4.8.1 Visible indicators. *Visible indicators shall comply with Section 11B-411.4.8.1.*

11B-411.4.8.1.1 Size. *Characters shall comply with Section 11B-407.4.8.1.1.*

11B-411.4.8.1.2 Location. *Location of indicators shall comply with Section 11B-407.4.8.1.2.*

11B-411.4.8.2 Audible indicators. *Audible indicators shall comply with Section 11B-411.4.8.2.*

11B-411.4.8.2.1 Signal type. *The signal shall be an automatic verbal annunciator which announces the floor at which the car is about to stop.*

11B-411.4.8.2.2 Signal level. *The verbal annunciator signal level shall comply with Section 11B-407.4.8.2.2.*

11B-411.4.8.2.3 Frequency. *The verbal annunciator frequency shall comply with Section 11B-407.4.8.2.3.*

11B-411.4.9 Emergency communication. *Emergency communication shall comply with Section 11B-407.4.9.*

11B-411.4.10 Support rail. *Support rails complying with Section 11B-407.4.10 shall be provided on at least one wall of the car.*

11B-411.4.11 Floor destination indicators. *There shall be on each elevator car door jamb a visual display indicating floor destinations.*

> ***11B-411.4.11.1 Height.*** *Floor destination characters shall be 1 inch (25 mm) high minimum complying with 11B-703.5.3.*
>
> ***11B-411.4.11.2 Contrast.*** *Visual display shall provide contrast with light characters on a dark background or dark characters on a light background. The background shall be solid and static.*
>
> ***11B-411.4.11.3 Duration.*** *Floor destination characters shall be displayed upon elevator car arrival at the input floor and shall not extinguish until the elevator car arrives at the destination floor.*

_ _
RELATED ITEM 11B.31.1

CHAPTER 2
Definition of HALL CALL CONSOLE

HALL CALL CONSOLE. *An elevator call user interface exclusive to a destination-oriented elevator system that requires the user to select a destination floor prior to entering the elevator car.*

_ _
RELATED ITEM 11B.31.2

CHAPTER 2
Definition of DESTINATION-ORIENTED ELEVATOR

DESTINATION-ORIENTED ELEVATOR. *Destination-oriented elevators are operated by the user selecting a destination floor at a hall call console located at or near an elevator landing. The destination-oriented elevator system then assigns an elevator car which transports the user to the selected destination floor. Destination-oriented elevators do not provide floor selection within elevator cars.*

_ _
RELATED ITEM 11B.31.3

CHAPTER 2
Definition of ACCESSIBILITY FUNCTION BUTTON

ACCESSIBILITY FUNCTION BUTTON. *A button on an elevator hall call console in a destination-oriented elevator system that when pressed will activate a series of visual and verbal prompts and announcements providing instruction regarding hall call console operation and direction to an assigned elevator.*

_ _
RELATED ITEM 11B.31.4

CHAPTER 11B
DIVISION 2: SCOPING REQUIREMENTS

***11B*-206 Accessible routes**

***11B*-206.6 Elevators.** Elevators provided for passengers shall comply with *Section 11B*-407. Where multiple elevators are provided, each elevator shall comply with *Section 11B*-407.

Exceptions:

1. In a building or facility permitted to use the exceptions to *Section 11B*-206.2.3 or permitted by *Section 11B*-206.7 to use a platform lift, elevators complying with *Section 11B*-408 shall be permitted.

2. Elevators complying with *Section 11B*-408 or *11B*-409 shall be permitted in multi-story residential dwelling units. *Elevators provided as a means of access within a private residence shall be installed so that they are not accessible to the general public or to other occupants of the building.*

3. Destination-oriented elevators complying with Section 11B-411 shall be permitted.

***11B*-206.6.1 Existing elevators.** Where elements of existing elevators are altered, the same element shall also be altered in all elevators that are programmed to respond to the same hall call control as the altered elevator and shall comply with the requirements of *Section 11B*-407 for the altered element.

Exception: *Where a group of existing elevators are altered into a destination-oriented elevator system, or where elements of existing destination-oriented elevators are altered, the same elements shall also be altered in all elevators that are programmed to respond to the same call console or group of call consoles and shall comply with the requirements of Section 11B-411 for the altered elements.*

RELATED ITEM 11B.31.5

CHAPTER 11B
DIVISION 4: ACCESSIBLE ROUTES

***11B*-407 Elevators**
***11B*-407.2 Elevator landing requirements.** …
***11B*-407.2.1 Call controls.** …

***11B*-407.2.1.4 Location.** The call button that designates the up direction shall be located above the call button that designates the down direction.

Exception: ***Reserved.*** ~~Destination-oriented elevators shall not be required to comply with *Section 11B*-407.2.1.4.~~

***11B*-407.2.1.5 Signals.** Call buttons shall have visible signals *that will activate* when each call is registered and *will extinguish* when each call is answered. *Call buttons shall be internally illuminated with a white light over the entire surface of the button.*

Exceptions:

1. ***Reserved.*** ~~Destination-oriented elevators shall not be required to comply with *Section 11B*-407.2.1.5 provided that visible and audible signals complying with *Section 11B*-407.2.2 indicating which elevator car to enter are provided.~~

2. ***Reserved.***

***11B*-407.2.2 Hall signals.** …

***11B*-407.2.2.1 Visible and audible signals.** A visible and audible signal shall be provided at each hoistway entrance to indicate which car is answering a call and the car's direction of travel. Where in-car signals are provided, they shall be visible from the floor area adjacent to the hall call buttons.

Exceptions:

1. ***Reserved.*** ~~Visible and audible signals shall not be required at each destination-oriented elevator where a visible and audible signal complying with *Section 11B*-407.2.2 is provided indicating the elevator car designation information.~~

2. ***Reserved.***

***11B*-407.2.2.2 Visible signals.** Visible signal fixtures shall be centered at 72 inches (*1829* mm) minimum above the finish floor or ground. The visible signal elements shall be a minimum 2½ inches (64 mm) *high by 2½ inches (64 mm) wide*. Signals shall be visible from the floor area adjacent to the hall call button.

Exceptions:

1. ***Reserved.*** ~~Destination-oriented elevators shall be permitted to have signals visible from the floor area adjacent to the hoistway entrance.~~

2. ***Reserved.***

***11B*-407.2.2.3 Audible signals.** Audible signals shall sound once for the up direction and twice for the down direction, or shall have verbal annunciators that indicate the direction of elevator car travel. Audible signals shall have a frequency of 1500 Hz maximum. Verbal annunciators shall have a frequency of 300 Hz minimum and 3000 Hz maximum. The audible signal and verbal annunciator shall be 10 dB minimum above ambient, but shall not exceed 80 dB, measured at the hall call button.

Exceptions:

1. ***Reserved.*** ~~Destination-oriented elevators shall not be required to comply with *Section 11B*-407.2.2.3 provided that the audible tone and verbal announcement is the same as those given at the call button or call button keypad.~~

2. ***Reserved.***

11B*-407.2.2.4 *Reserved. ~~**Differentiation.** Each destination-oriented elevator in a bank of elevators shall have audible and visible means for differentiation.~~

***11B*-407.2.3 Hoistway signs.** Signs at elevator hoistways shall comply with *Section 11B*-407.2.3.

***11B*-407.2.3.1 Floor designation.** Floor designations complying with *Sections 11B*-703.2 and *11B*-703.4.1 shall be provided on both jambs of elevator hoistway entrances. Floor designations shall be provided in both *raised* characters and Braille. *Raised* characters shall be 2 inches (51 mm) high. A *raised* star*, placed to the left of the floor designation,* shall be provided on both jambs at the main entry level. *The outside diameter of the star shall be 2 inches (51 mm) and all points shall be of equal length. Raised characters, including the star, shall be white on a black background. Braille complying with Section 11B-703.3 shall be placed below the corresponding raised characters and the star. The Braille translation for the star shall be "MAIN". Applied plates are acceptable if they are permanently fixed to the jamb.*

.

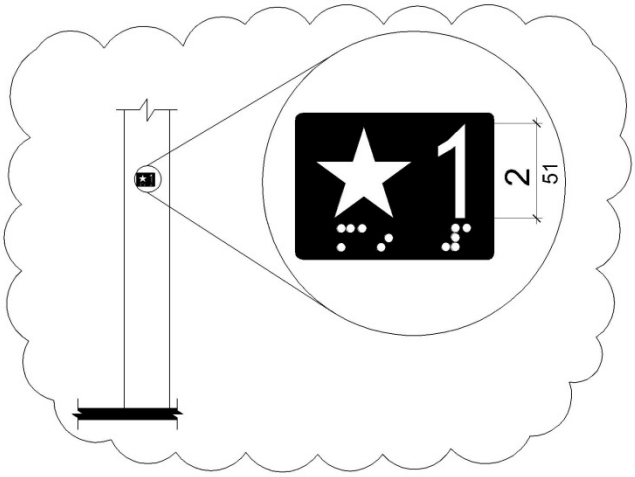

Figure *11B*-407.2.3.1
Floor Designations on Jambs of Elevator Hoistway Entrances

11B*-407.2.3.2 *Reserved. ~~**Car designations.** Destination-oriented elevators shall provide tactile car identification complying with *Sections 11B-703.2 and 11B-703.4.1* on both jambs of the hoistway immediately below the floor designation. Car designations shall be provided in both *raised* characters and Braille. *Raised* characters shall be 2 inches (51 mm) high. *Raised characters shall be white on a black background. Braille complying with Section 11B-703.3 shall be placed below the corresponding raised characters. Applied plates are acceptable if they are permanently fixed to the jamb.*~~

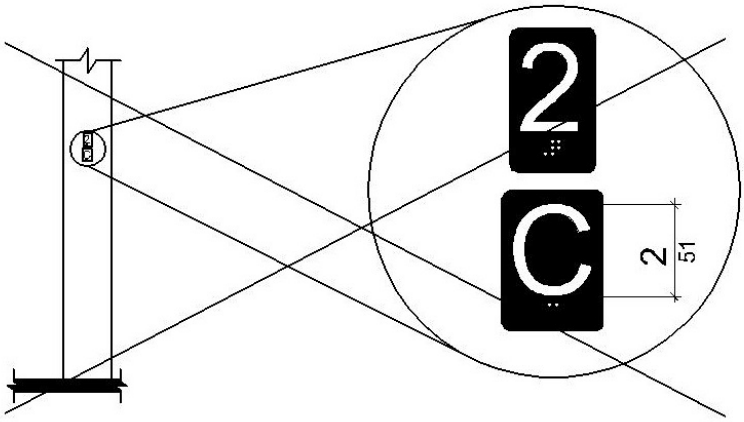

~~Figure *11B*-407.2.3.2~~
~~Car Designations on Jambs of Destination-Oriented Elevator Hoistway Entrances~~

***11B*-407.3 Elevator door requirements.** …

***11B*-407.3.4 Door and signal timing.** The minimum acceptable time from notification that a car is answering a call ~~or notification of the car assigned at the means for the entry of destination information~~ until the doors of that car start to close shall be calculated from the following equation:

T = D/(1.5 ft/s) or T = D/(455 mm/s) = 5 seconds minimum where T equals the total time in seconds and D equals the distance (in feet or millimeters) from the point in the lobby or corridor 60 inches (*1524* mm) directly in front of the farthest call button controlling that car to the centerline of its hoistway door.

Exceptions:

1. For cars with in-car lanterns, T shall be permitted to begin when the signal is visible from the point 60 inches (*1524* mm) directly in front of the farthest hall call button and the audible signal is sounded.

2. ***Reserved.*** ~~Destination-oriented elevators shall not be required to comply with Section 11B-407.3.4.~~

***11B*-407.4 Elevator car requirements.** …

***11B*-407.4.8 Car position indicators.** …

***11B*-407.4.8.1 Visible indicators.** …

***11B*-407.4.8.1.3 Floor arrival.** As the car passes a floor and when a car stops at a floor served by the elevator, the corresponding character shall illuminate.

Exception: ***Reserved.*** ~~Destination-oriented elevators shall not be required to comply with *Section 11B*-407.4.8.1.3 provided that the visible indicators extinguish when the call has been answered.~~

11B*-407.4.8.1.4** ***Reserved. ~~**Destination indicator.** In destination-oriented elevators, a display shall be provided in the car with visible indicators to show car destinations.~~

***11B*-407.4.8.2 Audible indicators.** …

***11B*-407.4.8.2.1 Signal type.** The signal shall be an automatic verbal annunciator which announces the floor at which the car is about to stop.

Exception: For elevators ~~other than destination-oriented elevators~~ that have a rated speed of 200 feet per minute (1 m/s) or less, a non-verbal audible signal with a frequency of 1500 Hz maximum which sounds as the car passes or is about to stop at a floor served by the elevator shall be permitted.

_ _

RELATED ITEM 11B.31.6

Chapter 11B
DIVISION 7: COMMUNICATION ELEMENTS AND FEATURES

***11B*-703 Signs**
***11B*-703.7 Symbols of accessibility.** …
***11B*-703.7.2 Symbols.** …

***11B*-703.7.2.1 International Symbol of Accessibility.** The International Symbol of Accessibility shall comply with Figure *11B*-703.7.2.1. *The symbol shall consist of a white figure on a blue background. The blue shall be Color No. 15090 in Federal Standard 595B.*

~~Exception~~* *Exceptions:

1. *The appropriate enforcement agency may approve other colors to complement décor or unique design. The symbol contrast shall be light on dark or dark on light.*

2. *On the accessibility function button on hall call consoles in a destination-oriented elevator system the International Symbol of Accessibility shall be a white symbol on a black background.*

ITEM 11B.32

DIVISION 5: GENERAL SITE AND BUILDING ELEMENTS

***11B*-504 Stairways**

***11B*-504.2 Treads and risers.** All steps on a flight of stairs shall have uniform riser heights and uniform tread depths. Risers shall be 4 inches (*102* mm) high minimum and 7 inches (*178* mm) high maximum. Treads shall be 11 inches (279 mm) deep minimum.

***Exception:** Curved stairways with winder treads are permitted at stairs which are not part of a required means of egress.*

_ _

RELATED ITEM 11B.32.1

CHAPTER 2
Adopt Existing Definition of MEANS OF EGRESS

Adopt Existing Definition of WINDER

MEANS OF EGRESS. A continuous and unobstructed path of vertical and horizontal egress travel from any occupied portion of a building or structure to a public way. A means of egress consists of three separate and distinct parts: the exit access, the exit and the exit discharge.

WINDER. A tread with nonparallel edges.

_ _ _ _ _ _ _ _ _ _ _ _ _ _ _ _ _ _ _ _
RELATED ITEM 11B.32.2

WITHDRAWN

ITEM 11B.33

DIVISION 5: GENERAL SITE AND BUILDING ELEMENTS

***11B*-505 Handrails**
***11B*-505.10 Handrail extensions.** Handrail gripping surfaces shall extend beyond and in the same direction of stair flights and ramp runs in accordance with *Section 11B*-505.10.

Exceptions:

1. ...
2. ...
3. In alterations, *where the extension of the handrail in the direction of stair flight or ramp run would create a hazard, the extension of the handrail may be turned 90 degrees from the direction of stair flight or ramp run.*

ITEM 11B.34

DIVISION 5: GENERAL SITE AND BUILDING ELEMENTS

***11B*-505.10.3 Bottom extension at stairs.** At the bottom of a stair flight, handrails shall extend at the slope of the stair flight for a horizontal distance equal to one tread depth beyond the last riser nosing. ~~*Such extension shall continue with a horizontal extension or shall be continuous to the handrail of an adjacent stair flight* or *shall return to a wall, guard, or the walking surface. At the bottom of a stair flight, a*~~ *The horizontal extension of a handrail shall be 12 inches (305 mm) long minimum and a height equal to that of the sloping portion of the handrail as measured above the stair nosings.* Extension shall return to a wall, guard, or the landing surface, or shall be continuous to the handrail of an adjacent stair flight.

ITEM 11B.35

WITHDRAWN

ITEM 11B.36

DIVISION 6: PLUMBING ELEMENTS AND FACILITIES

***11B*-604 Water closets and toilet compartments**
***11B*-604.3 Clearance.** …

***11B*-604.3.1 Size.** Clearance around a water closet shall be 60 inches (1524 mm) minimum measured perpendicular from the side wall and 56 inches (14422 mm) minimum measured perpendicular from the rear wall. *A minimum 60 inches (1524 mm) wide and 48 inches (1219 mm) deep maneuvering space shall be provided in front of the water closet.*

> ***Exception:*** *In residential dwelling units complying with Section 11B-233.3.1.1, maneuvering space in front of the water closet shall be a minimum 60 inches (1524 mm) wide and 36 inches (914 mm) deep.*

ITEM 11B.37

DIVISION 6: PLUMBING ELEMENTS AND FACILITIES

***11B*-604 Water closets and toilet compartments**

***11B*-604.7 Dispensers.** Toilet paper dispensers shall comply with *Section 11B*-309.4 and shall be 7 inches (*178* mm) minimum and 9 inches (*229* mm) maximum in front of the water closet measured to the centerline of the dispenser. The outlet of the dispenser shall be *below the grab bar, 19 inches (483 mm) minimum* above the finish floor and shall not be located behind grab bars. Dispensers shall not be of a type that controls delivery or that does not allow continuous paper flow.

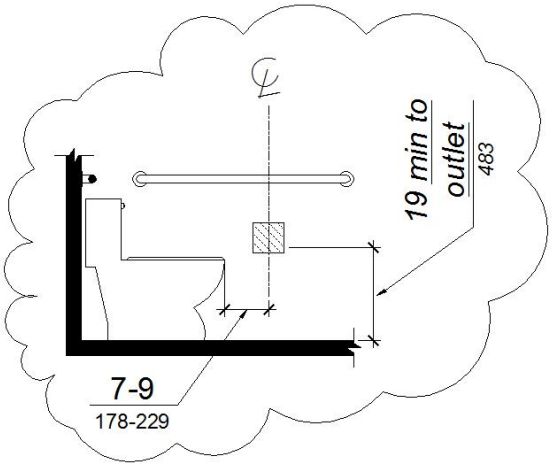

Figure *11B*-604.7
Dispenser Outlet Location

ITEM 11B.38

DIVISION 6: PLUMBING ELEMENTS AND FACILITIES

***11B*-604 Water closets and toilet compartments**
***11B*-604.8 Toilet compartments.** …
***11B*-604.8.1 Wheelchair accessible compartments.** …

> ***11B*-604.8.1.1 Size.** Wheelchair accessible compartments shall be 60 inches (*1524* mm) wide minimum measured perpendicular to the side wall, and 56 inches (*1422* mm) deep minimum for wall hung water closets and 59 inches (*1499* mm) deep minimum for floor mounted water closets measured perpendicular to the rear wall. *Wheelchair accessible compartments shall additionally provide maneuvering space complying with Section 11B-604.8.1.1.1, 11B-604.8.1.1.2, or 11B-*

604.8.1.1.3, as applicable. Wheelchair accessible compartments for children's use shall be 60 inches (*1524* mm) wide minimum measured perpendicular to the side wall, and 59 inches (*1499* mm) deep minimum for wall hung and floor mounted water closets measured perpendicular to the rear wall.

11B-604.8.1.1.1 Maneuvering space with in-swinging door. *In a wheelchair accessible compartment with an in-swinging door, a minimum 60 inches (1524 mm) wide by 36 inches (914 mm) deep maneuvering space shall be provided in front of the clearance required in Section 11B-604.8.1.1. See Figures 11B-604.8.1.1.2 (b) and 11B-604.8.1.1.3 (b).*

11B-604.8.1.1.2 Maneuvering space with side-opening door. *In a wheelchair accessible compartment with a side-opening door, either in-swinging or out-swinging, a minimum 60 inches (1524 mm) wide and 60 inches (1524 mm) deep maneuvering space shall be provided in front of the water closet. See Figure 11B-604.8.1.1.2.*

11B-604.8.1.1.3 Maneuvering space with end-opening door. *In a wheelchair accessible compartment with an end-opening door (facing the water closet), either in-swinging or out-swinging, a minimum 60 inches (1524 mm) wide and 48 inches (1219 mm) deep maneuvering space shall be provided in front of the water closet. See Figure 11B-604.8.1.1.3.*

ITEM 11B.39

DIVISION 6: PLUMBING ELEMENTS AND FACILITIES

***11B*-604 Water closets and toilet compartments**
***11B*-604.8 Toilet compartments.** …
***11B*-604.8.1 Wheelchair accessible compartments.** …
***11B*-604.8.1.1 Size.** …

11B-604.8.1.1.2 Maneuvering space with side-opening door. *In a wheelchair accessible compartment with a ~~side-opening~~ door located in the side wall or partition, either in-swinging or out-swinging, a minimum 60 inches (1524 mm) wide and 60 inches (1524 mm) deep maneuvering space shall be provided in front of the water closet. See Figure 11B-604.8.1.1.2.*

11B-604.8.1.1.3 Maneuvering space with end-opening door. *In a wheelchair accessible compartment with ~~an end-opening door~~ a door located in the front wall or partition (facing the water closet), either in-swinging or out-swinging, a minimum 60 inches (1524 mm) wide and 48 inches (1219 mm) deep maneuvering space shall be provided in front of the water closet. See Figure 11B-604.8.1.1.3.*

ITEM 11B.40

DIVISION 6: PLUMBING ELEMENTS AND FACILITIES

***11B*-606 Lavatories and sinks**

11B-606.7 Sink depth. *~~Sinks shall be 6½ inches (165 mm) deep maximum.~~ Where a forward approach is required at a sink, knee and toe clearance shall be provided in compliance with Section 11B-306.*

ITEM 11B.41

DIVISION 7: COMMUNICATION ELEMENTS AND FEATURES

***11B*-703 Signs**

***11B*-703.3 Braille.** …

***11B*-703.3.2 Position.** Braille shall be positioned below the corresponding text *in a horizontal format, flush left or centered*. If text is multi-lined, Braille shall be placed below the entire text. Braille shall be separated 3/8 inch (9.5 mm) minimum *and $^{1}/_{2}$ inch (12.7 mm) maximum* from any other tactile characters and 3/8 inch (9.5 mm) minimum from raised borders and decorative elements.

Exception: Braille provided on elevator car controls shall be separated 3/16 inch (4.8 mm) minimum and shall be located ~~either~~ directly below the corresponding raised characters or symbols.

ITEM 11B.42

DIVISION 7: COMMUNICATION ELEMENTS AND FEATURES

***11B*-703 Signs**
***11B*-703.4 Installation height and location.** …

***11B*-703.4.2 Location.** Where a tactile sign is provided at a door, the sign shall be located alongside the door at the latch side. Where a tactile sign is provided at double doors with one active leaf, the sign shall be located on the inactive leaf. Where a tactile sign is provided at double doors with two active leafs, the sign shall be located to the right of the right hand door. Where there is no wall space at the latch side of a single door or at the right side of double doors, signs shall be located on the nearest adjacent wall. Signs containing tactile characters shall be located so that a clear floor space of 18 inches (*457* mm) minimum by 18 inches (*457* mm) minimum, centered on the tactile characters, is provided beyond the arc of any door swing between the closed position and 45 degree open position. ~~*Where permanent identification signage is provided for rooms and spaces they shall be located on the approach side of the door as one enters the room or space. Signs that identify exits shall be located on the approach side of the door as one exits the room or space.*~~ *Where provided, signs identifying permanent rooms and spaces shall be located at the entrance to, and outside of the room or space. Where provided, signs identifying exits shall be located at the exit door when approached in the direction of egress travel.*

Exception: ~~***Reserved.***~~ *In alterations where sign installation locations identified in Section 11B-703.4.2 are obstructed or otherwise unavailable for sign installation, signs with tactile characters shall be permitted on the push side of doors with closers and without hold-open devices.*

ITEM 11B.43

DIVISION 7: COMMUNICATION ELEMENTS AND FEATURES

***11B*-703 Signs**
***11B*-703.7 Symbols of accessibility.** …
***11B*-703.7.2 Symbols.** …

***11B*-703.7.2.1 International Symbol of Accessibility.** The International Symbol of Accessibility shall comply with Figure *11B*-703.7.2.1. *The symbol shall consist of a white figure on a blue background.* ~~*The blue shall be Color No. 15090 in Federal Standard 595B.*~~ *The color blue shall approximate FS 15090 in Federal Standard 595C.*

Exception: *The appropriate enforcement agency may approve other colors* ~~*to complement décor or unique design. The symbol contrast shall be light on dark or dark on light.*~~ *provided the symbol contrast is light on dark or dark on light.*

***11B*-703 Signs**

11B-703.8 Variable message signs.

11B-703.8.1 General. *High resolution variable message sign (VMS) characters shall comply with Sections 11B-703.5 and 11B-703.8.12 through 11B-703.8.14. Low resolution variable message sign (VMS) characters shall comply with Section 11B-703.8.*

11B-703.8.2 Case. *Low resolution VMS characters shall be uppercase.*

11B-703.8.3 Style. *Low resolution VMS characters shall be conventional in form, shall be san serif, and shall not be italic, oblique, script, highly decorative, or of other unusual forms.*

11B-703.8.4 Character height. *The uppercase letter "I" shall be used to determine the allowable height of all low resolution VMS characters of a font. Viewing distance shall be measured as the horizontal distance between the character and an obstruction preventing further approach towards the sign. The uppercase letter "I" of the font shall have a minimum height complying with Table 11B-703.8.4.*

Exception: *In assembly seating where the maximum viewing distance is 100 feet (30.5 m) or greater, the height of the uppercase "I" of low resolution VMS fonts shall be permitted to be 1 inch (25 mm) for every 30 feet (9144 mm) of viewing distance, provided the character height is 8 inches (203 mm) minimum. Viewing distance shall be measured as the horizontal distance between the character and where someone is expected to view the sign.*

Table 11B-703.8.4 Low Resolution VMS Character Height

Height Above Floor to Baseline of Character	***Horizontal Viewing Distance***	***Minimum Character Height***
40 inches (1016 mm) to less than or equal to 70 inches (1778 mm)	*Less than 10 feet (3048 mm)*	*2 inches (51 mm)*
	10 feet (3048 mm) and greater	*2 inches (51 mm), plus 1/5 inch (5.1 mm) per foot (305 mm) of viewing distance above 10 feet (3048 mm)*
Greater than 70 inches (1778 mm) to less than or equal to 120 inches (3048 mm)	*Less than 15 feet (4572 mm)*	*3 inches (76 mm)*
	15 feet (4572 mm) and greater	*3 inches (76 mm), plus 1/5 inch (5.1 mm) per foot (305 mm) of viewing distance above 15 feet (4572 mm)*
Greater than 120 inches (3048 mm)	*Less than 20 feet (6096 mm)*	*4 inches (102 mm)*
	20 feet (6096 mm) and greater	*4 inches (102 mm), plus 1/5 inch (5.1 mm) per foot (305 mm) of viewing distance above 20 feet (6096 mm)*

11B-703.8.5 Character width. *The uppercase letter "O" shall be used to determine the allowable width of all low resolution VMS characters of a font. Low resolution VMS characters shall comply with the pixel count for character width in Table 11B-703.8.5.*

Table 11B-703.8.5 Pixel Count for Low Resolution VMS Signage

Character Height	***Character Width Range***	***Stroke Width Range***	***Character Spacing Range***
7	*5-6*	*1*	*2*
8	*6-7*	*1-2*	*2-3*
9	*6-8*	*1-2*	*2-3*
10	*7-9*	*2*	*2-4*
11	*8-10*	*2*	*2-4*
12	*8-11*	*2*	*3-4*
13	*9-12*	*2-3*	*3-5*
14	*10-13*	*2-3*	*3-5*
15	*11-14*	*2-3*	*3-5*

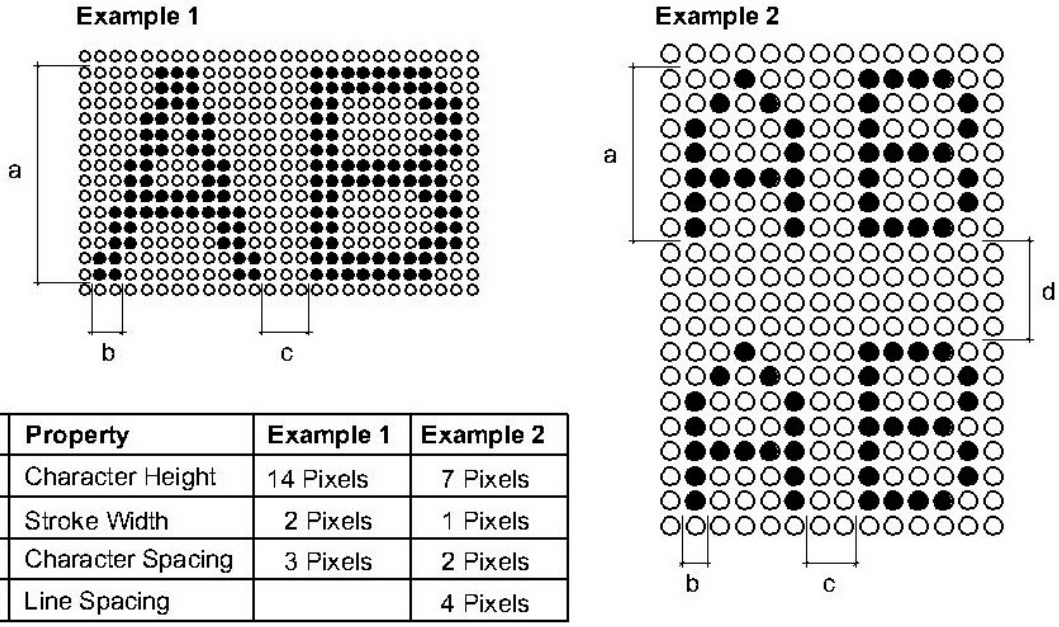

	Property	Example 1	Example 2
a	Character Height	14 Pixels	7 Pixels
b	Stroke Width	2 Pixels	1 Pixels
c	Character Spacing	3 Pixels	2 Pixels
d	Line Spacing		4 Pixels

Figure 11B-703.8.5
Low Resolution VMS Signage Characters

11B-703.8.6 Stroke width. *The uppercase letter "I" shall be used to determine the allowable stroke width of all low resolution VMS characters of a font. Low resolution VMS characters shall comply with the pixel count for stroke width in Table 11B-703.8.5.*

11B-703.8.7 Character spacing. *Spacing shall be measured between the two closest points of adjacent low resolution VMS characters within a message, excluding word spaces. Low resolution VMS character spacing shall comply with the pixel count for character spacing in Table 11B-703.8.5.*

11B-703.8.8 Line spacing. *Low resolution VMS characters shall comply with Section 11B-703.5.9.*

11B-703.8.9 Height above floor. *Low resolution VMS characters shall be 40 inches (1016 mm)*

minimum above the floor of the viewing position, measured to the baseline of the character. Heights of low resolution variable message sign characters shall comply with Table 11B-703.8.4, based on the size of the characters on the sign.

11B-703.8.10 Finish. *The background of low resolution VMS characters shall have a non-glare finish.*

11B-703.8.11 Contrast. *Low resolution VMS characters shall be light characters on a dark background.*

11B-703.8.12 Protective covering. *Where a protective layer is placed over VMS characters through which the VMS characters must be viewed, the protective covering shall have a non-glare finish.*

11B-703.8.13 Brightness. *The brightness of variable message signs in exterior locations shall automatically adjust in response to change in ambient light levels.*

11B-703.8.14 Rate of change. *Where a VMS message can be displayed in its entirety on a single screen, it shall be displayed on a single screen and shall remain motionless on the screen for a minimum 3 seconds or one second minimum for every 7 characters of the message including spaces whichever is longer.*

_ _
RELATED ITEM 11B.44.1

CHAPTER 2
Definition of VARIABLE MESSAGE SIGNS (VMS)
Definition of VARIABLE MESSAGE SIGN (VMS) CHARACTERS

VARIABLE MESSAGE SIGNS (VMS). *Electronic signs that have a message with the capacity to change by means of scrolling, streaming, or paging across a background.*

VARIABLE MESSAGE SIGN (VMS) CHARACTERS. *Characters of an electronic sign are composed of pixels in an array. High resolution VMS characters have vertical pixel counts of 16 rows or greater. Low resolution VMS characters have vertical pixel counts of 7 to 15 rows.*

_ _
RELATED ITEM 11B.44.2

CHAPTER 11B
DIVISION 2: SCOPING REQUIREMENTS

***11B*-216 Signs**

11B-216.14 Variable message signs. *Where provided in transportation facilities, variable message signs conveying transportation-related information shall comply with Section 11B-703.8. Where provided in buildings that are designed as emergency shelters, variable message signs conveying emergency-related information shall comply with Section 11B-703.8.*

ITEM 11B.45

DIVISION 7: COMMUNICATION ELEMENTS AND FEATURES

11B-705.1 Detectable warnings
11B-705.1.1 General. *…*

***11B-705.1.1.3 Color and* Contrast.** *Detectable warning surfaces at transit boarding platform edges, bus stops, hazardous vehicular areas, reflecting pools, and track crossings shall comply with Section 11B-705.1.1.3.1. Detectable warnings at other locations shall comply with either Section 11B-705.1.1.3.1 or Section 11B-705.1.1.3.2. The material used to provide visual contrast shall be an integral part of the surface.*

11B-705.1.1.3.1 *Detectable warning surfaces shall be yellow and approximate FS 33538 of Federal Standard 595C.*

11B-705.1.1.3.2 Detectable warning surfaces shall *provide a 70 percent minimum visual* contrast ~~visually~~ with adjacent walking surfaces ~~either light-on-dark, or dark-on-light. *The material used to provide contrast shall be an integral part of the surface*~~. *Contrast in percent shall be determined by:*

Contrast percent = [(B1-B2)/B1] x 100 ~~percent~~ where
B1 = light reflectance value (LRV) of the lighter area and
B2 = light reflectance value (LRV) of the darker area.

Exception: *Where the detectable warning surface does not ~~adequately contrast with~~ provide a 70 percent minimum contrast with adjacent surfaces, a 1 inch (25 mm) wide minimum black strip shall separate ~~yellow~~ the detectable warning from adjacent surfaces.*

11B-705.1.1.4 Resiliency. *…*

~~***11B-705.1.1.5 Color.*** *Detectable warning surfaces shall be yellow conforming to FS 33538 of Federal Standard 595C.*~~

~~***Exception:*** *Detectable warning surfaces at curb ramps, islands or cut-through medians shall not be required to comply with Section 11B-705.1.1.5.*~~

11B-705.1.2 Locations. *…*
***11B-705.1.2.1* Platform edges.** …

11B-705.1.2.2 Curb ramps. *Detectable warnings at curb ramps shall extend 36 inches (914 mm) in the direction of travel. Detectable warnings shall extend the full width of the ramp run less 2 inches (51 mm) maximum on each side, excluding any flared sides. Detectable warnings shall be located so the edge nearest the curb is 6 inches (152 mm) minimum and 8 inches (203 mm) maximum from the line at the face of the curb marking the transition between the curb and the gutter, street or highway.*

Exception: *On parallel curb ramps, detectable warnings shall be placed on the turning space at the flush transition between the street and sidewalk. Detectable warnings shall extend the full width of the turning space at the flush transition between the street and the sidewalk less 2 inches (51 mm) maximum on each side.*

11B-705.1.2.3 Islands or cut-through medians. *Detectable warnings at pedestrian islands or cut-through medians shall be 36 inches (914 mm) minimum in depth extending the full width of the pedestrian path or cut-through less 2 inches (51 mm) maximum on each side, placed at the edges of the pedestrian island or cut-through median, and shall be separated by 24 inches (610 mm) minimum of walking surface without detectable warnings.*

Exception: *Detectable warnings shall be 24 inches (610 mm) minimum in depth at pedestrian*

islands or cut-through medians that are less than 96 inches (2438 mm) in length in the direction of pedestrian travel.

_ _ _ _ _ _ _ _ _ _ _ _ _ _ _ _ _ _ _ _

RELATED ITEM 11B.45.1

Chapter 11B
DIVISION 7: COMMUNICATION ELEMENTS AND FEATURES

11B-705.2 Detectable directional texture. *Detectable directional texture at transit boarding platforms shall comply with Figure 11B-705.2 and shall be 0.1 inch (2.5 mm) in height that tapers off to 0.04 inch (1.0 mm), with bars raised 0.2 inch (5.1 mm) from the surface. The raised bars shall be 1.3 inches (33 mm) wide and 3 inches (76 mm) from center-to-center of each bar. This surface shall differ from adjoining walking surfaces in resiliency or sound-on-cane contact. The color shall be yellow ~~conforming to Federal Color No. 33538~~ and approximate FS 33538 of Federal Standard 595C. This surface will be placed directly behind the yellow detectable warning texture specified in 11B-705.1.2.1, aligning with all doors of the transit vehicles where passengers will embark. The width of the directional texture shall be equal to the width of the transit vehicle's door opening. The depth of the texture shall not be less than 36 inches (914 mm).*

ITEM 11B.46

DIVISION 8: Special Rooms, Spaces and Elements

11B*-804 Kitchens, ~~and~~ kitchenettes, *and wet bars.

***11B*-804.1 General.** Kitchens, ~~and~~ kitchenettes, *and wet bars* shall comply with *Section 11B*-804.

***11B*-804.2 Clearance.** …
***11B*-804.3 Kitchen work surface.** ...
***11B*-804.4 Sinks.** ...
***11B*-804.5 Storage.** ...
***11B*-804.6 Appliances.** ...

ITEM 11B.47

DIVISION 8: Special Rooms, Spaces and Elements

***11B*-810 Transportation facilities**
***11B*-810.2 Bus boarding and alighting areas.** …

***11B*-810.2.3 Connection.** Bus stop boarding and alighting areas shall be connected to streets, sidewalks, or pedestrian paths by an accessible route complying with *Section 11B*-402. *Newly constructed bus stop ~~pads shall provide a square curb transition between the pad and roadway elevations~~ boarding and alighting areas shall provide a detectable transition between the boarding/alighting area and the roadway; the detectable transition shall consist of a curb with the face sloped at 35 degrees maximum from vertical or detectable warnings complying with ~~Section 11B-705.2~~ Sections 11B-705.1.1 and 11B-705.1.2.4.*

_ _

RELATED ITEM 11B.47.1

CHAPTER 11B

DIVISION 2: SCOPING REQUIREMENTS

11B-247.1Detectable warnings.
11B-247.1.2 Where required. …

11B-247.1.2.4 Bus stops. ~~*Bus stop pads shall provide a square curb surface or detectable warnings complying*~~ *Where detectable warnings are provided at bus stop boarding and alighting areas in compliance with Section 11B-810.2.3, detectable warnings shall comply with Sections 11B-705.1.1 and 11B-705.1.2.4.*

_ _
RELATED ITEM 11B.47.2

CHAPTER 11B
DIVISION 2: SCOPING REQUIREMENTS

11B-705.1 Detectable warnings
11B-705.1.2 Locations. …

11B-705.1.2.4 Bus stops. *When detectable warnings are provided at bus stop* ~~*pads, it shall be 36 inches (914 mm) in width*~~ *boarding and alighting areas, the detectable warnings shall extend the full width of the boarding/alighting area and shall be 36 inches (914 mm) minimum in depth.*

ITEM 11B.48

DIVISION 10: Recreation Facilities

***11B*-1009 Swimming pools, wading pools, and spas**
***11B*-1009.2 Pool lifts.** …

***11B*-1009.2.1 Pool lift location.** Pool lifts shall be located where the water level *is 36 inches (914 mm) minimum and 48 inches (1219 mm) maximum.*

Exceptions:

1. Where the entire pool depth is *less than 36 inches (914 mm) or* greater than 48 inches (*1219* mm), compliance with *Section 11B*-1009.2.1 shall not be required.

2. Where multiple pool lift locations are provided, no more than one pool lift shall be required to be located in an area where the water level is 48 inches (*1219* mm) maximum.

~~*3. Where the water depth of the entire swimming pool, wading pool or spa is less than 36 inches (914 mm), pool lifts shall be located where the water level is less than 36 inches (914 mm).*~~

ITEM 11B.49

DIVISION 10: Recreation Facilities

***11B*-1009 Swimming pools, wading pools, and spas**

***11B*-1009.2.4 Seat.** *The seat shall be rigid and shall have a back support that is at least 12 inches (305 mm) tall.* The height of the lift seat shall be designed to allow a stop at *17 inches (*~~*423*~~ *432 mm)* minimum to 19 inches (*483* mm) maximum measured from the deck to the top of the seat surface when in the

raised (load) position. *The seat shall have a restraint for the use of the occupant with operable parts complying with Section 11B-309.*

ITEM 11B.50

DIVISION 2: SCOPING REQUIREMENTS

***11B*-206 Accessible routes**
***11B*-206.2 Where required.** …
***11B*-206.2.3 Multi-story buildings and facilities.** …

11B-206.2.3.2 Distance to Elevators. *In new construction of buildings where elevators are required by Section 11B-206.2.3, and which exceed 10,000 square feet (929 m^2) on any floor, an accessible means of vertical access via ramp, elevator or lift shall be provided within 200 feet (60,960 mm) of travel of each stair and each escalator. In existing buildings that exceed 10,000 square feet (929 m^2) on any floor and in which elevators are required by Section 11B-206.2.3, whenever a newly constructed means of vertical access is provided via stairs or an escalator, an accessible means of vertical access via ramp, elevator or lift shall be provided within 200 feet (60,960 mm) of travel of each new stair or escalator.*

Exception: *Stairs used solely for emergency egress.*

ITEM 11B.51

DIVISION 4: ACCESSIBLE ROUTES

***11B*-405 Ramps**
***11B*-405.8 Handrails.** Ramp runs shall have handrails complying with Section 11B-505.

Exceptions:

1. *Reserved.*
2. *Reserved.* ~~*Handrails are not required at ramps immediately adjacent to fixed seating in assembly areas.*~~
3. *Curb ramps do not require handrails.*
4. *At door landings, handrails are not required on ramp runs less than 6 inches (152 mm) in rise or 72 inches (1829 mm) in length.*

ITEM 11B.52

DIVISION 4: ACCESSIBLE ROUTES

***11B*-408 Limited-use/limited-application elevators**
***11B*-408.3 Elevator doors.** …
***11B*-408.3.2 Swinging doors.** ...

***11B*-408.3.2.1 Power operation.** Swinging doors shall be power-operated and shall comply with ANSI/BHMA A156.19 ~~(1997 or 2002 edition)~~.

ITEM 11B.53

DIVISION 4: ACCESSIBLE ROUTES

***11B*-410 Platform lifts**

***11B*-410.1 General.** Platform lifts shall comply with ASME A18.1 ~~(1999 edition or 2003 edition)~~. Platform lifts shall not be attendant-operated and shall provide unassisted entry and exit from the lift.

ITEM 11B.54

DIVISION 10: RECREATION FACILITIES

***11B*-1008 Play Areas**
***11B*-1008.2 Accessible Routes.** …
***11B*-1008.2.6 Ground Surfaces.** …

***11B*-1008.2.6.2 Use Zones.** Ground surfaces located within use zones shall comply with ASTM F 1292 (1999 edition or 2004 edition).

ITEM 11B.55

DIVISION 6: PLUMBING ELEMENTS AND FACILITIES

***11B*-604 Water closets and toilet compartments**
***11B*-604.8 Toilet compartments.** …
11B-604.8.1 Wheelchair accessible compartments. …

***1B*-604.8.1.4 Toe clearance.** *At* least one side partition shall provide a toe clearance of 9 inches (*229* mm) minimum above the finish floor and 6 inches (*152* mm) deep minimum beyond the compartment-side face of the partition, exclusive of partition support members. *Partition components at toe clearances shall be smooth without sharp edges or abrasive surfaces.* Compartments for children's use shall provide a toe clearance of 12 inches (305 mm) minimum above the finish floor.

Exception: Toe clearance at the side partition is not required in a compartment greater than 66 inches (*1676* mm) wide.

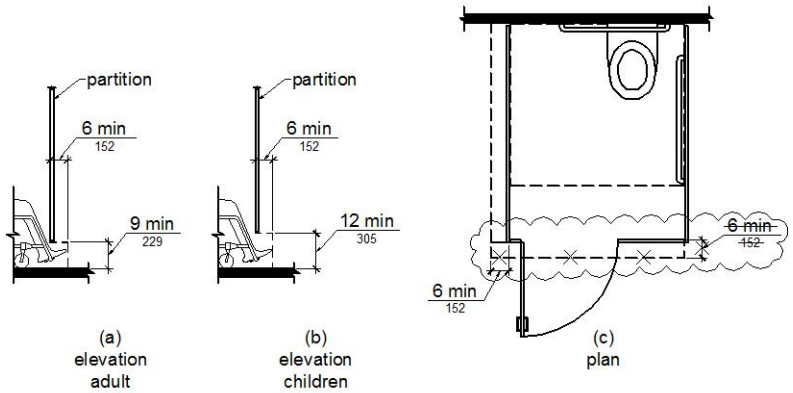

Figure *11B*-604.8.1.4
Wheelchair Accessible Toilet Compartment Toe Clearance

Notation
Authority: Government Code Section 4450.
Reference(s): Government Code Sections 4450 through 4461, 12955.1 and 14679; Health and Safety Code Section 18949.1 and 19952 through 19959; and Vehicle Code Section 22511.8.