EXPRESS TERMS

FOR

PROPOSED BUILDING STANDARDS

OF THE

DEPARTMENT OF HOUSING AND COMMUNITY DEVELOPMENT

REGARDING THE ADOPTION BY REFERENCE OF THE

2009 INTERNATIONAL BUILDING CODE (IBC) WITH PROPOSED AMENDMENTS INTO THE

2010 CALIFORNIA BUILDING CODE (CBC)

CALIFORNIA CODE OF REGULATIONS, TITLE 24, PART 2

HCD 01/09

The Department of Housing and Community Development (HCD) proposes to adopt the 2009 edition of the International Building Code (IBC) for codification and effectiveness into the 2010 edition of the California Building Code (CBC) as presented on the following pages, including any necessary amendments. HCD further proposes to:

- Repeal the 2007 edition of the California Building Code;
- Repeal amendments to the model code that are no longer necessary, repeal or amend building standards that are not addressed by a model code;
- Relocate or codify existing adopted and necessary amendments to the model code into the format of the model code proposed for adoption, the action of which has no regulatory effect; adopt new necessary amendments to the model code proposed for adoption; and/or
- Adopt new building standards that are not addressed by the model code proposed for adoption

---

LEGEND FOR EXPRESS TERMS:

1. **Existing California amendments or code language being modified***: All such language shown in italics, modified language is* <u>*underlined*</u> *or shown in* ~~*strikeout*~~*.*

2. **IBC language with new California amendments:** IBC language shown in normal Arial 9 point; California amendments to IBC text shown <u>*underlined and in italics*</u>.

3. **Repealed text**: All language shown in ~~strikeout.~~

4. **Amended, adopted or repealed language after public hearing:** All such language appears in <u>double underline</u> or ~~double strikeout~~.

5. **Notation:** Authority and Reference citations are provided at the end of each chapter.

<u>NOTE</u>: THIS DOCUMENT IS A COMPILATION OF THE FOLLOWING ITEMS:

1: <u>STRUCTURAL STANDARDS</u> [Chapters 5 - 7, 9, 14 - 23]

2: <u>NON-STRUCTURAL STANDARDS</u> [Chapters 1 – 4, 8, 10, 12, 13, 24 – 35, Appendices A – D, F – K]

3: <u>ACCESSIBILITY STANDARDS</u> [Chapter 11A]

<u>SPECIAL NOTES</u>:
The 2009 IBC includes defined terms in *italics*. This document displays the defined terms in regular font to differentiate California amendments from model code language. The titles of model code publications, e.g., *International Building Code,* are still shown in italics in the Express Terms.

The Express Terms include amendments that correct references within the California Building Code from International Building Code to *California Building Code*. Similar amendments are also proposed for references to other International model codes adopted as California codes. These types of amendments are not specifically identified in the Matrix Adoption Tables as adopted for HCD applications.

SECTIONS RELATED TO ACCESSIBILITY

NOTE: ***The following list identifying sections in this rulemaking that have newly proposed changes which relate to accessibility is provided as a guide to the user.***

Chapter 1, California Administration, Division I

Section 1.8.2.1.2 Housing Accessibility

Chapter 2 Definitions

Section 202 Definitions

Chapter 4 Special Detailed Requirements Based on Use and Occupancy

Section 419 Live/Work Units
Section 420.4 Carbon Monoxide Alarms
Section 420.4.4 Visible Alarms

Chapter 10 Means of Egress

Section 1003 General Means of Egress
Section 1007 Accessible Means of Egress
Section 1008 Doors, Gates and Turnstiles
Section 1009 Stairways
Section 1010 Ramps
Section 1011 Exit Signs
Section 1014 Exit Access
Section 1022 Exit Enclosures

Chapter 11A Housing Accessibility (entire chapter)

1. HCD proposes to renumber former "(California) Chapter 1, General Code Provisions (Sections 101 – 101.12 and 108 – 108.10)" to "Chapter 1, Administration, Division I (Sections 1.1 – 1.1.12 and 1.8 – 1.8.10)" and amend as follows:

~~(CALIFORNIA) CHAPTER 1~~
~~GENERAL CODE PROVISIONS~~

CHAPTER 1

CALIFORNIA ADMINISTRATION

DIVISION I

SECTION ~~101~~ 1.1.0
GENERAL

~~101.1~~ 1.1.1Title. *These regulations shall be known as the California Building Code, may be cited as such and will be referred to herein as "this code." The California Building Code is Part 2 of ~~12~~ twelve parts of the official compilation and publication of the adoption, amendment, and repeal of building regulations to the California Code of Regulations, Title 24, also referred to as the California Building Standards Code. This part incorporates by adoption the ~~2006~~ 2009 International Building Code of the International Code Council with necessary California amendments.*

~~101.2~~ 1.1.2 Purpose. *The purpose of this code is to establish the minimum requirements to safeguard the public health, safety and general welfare through structural strength, means of egress facilities, stability, access to persons with disabilities, sanitation, adequate lighting and ventilation and energy conservation; safety to life and property from fire and other hazards attributed to the built environment; and to provide safety to fire fighters and emergency responders during emergency operations*

~~101.3~~ 1.1.3 Scope. *The provisions of this code shall apply to the construction, alteration, movement, enlargement, replacement, repair, equipment, use and occupancy, location, maintenance, removal and demolition of every building or structure or any appurtenances connected or attached to such buildings or structures throughout the State of California.*

~~101.3.1~~ 1.1.3.1 Nonstate-regulated buildings, structures, and applications. *Except as modified by local ordinance pursuant to Section ~~101.8~~ 1.1.8, the following standards in the California Code of Regulations, Title 24, Parts 2, 2.5, 3, 4, 5, 6, 9, ~~and~~ 10 and 11 shall apply to all occupancies and applications not regulated by a state agency.*

~~101.3.2~~ 1.1.3.2 State-regulated buildings, structures, and applications. *The model code, state amendments to the model code, and/or state amendments where there are no relevant model code provisions shall apply to the following buildings, structures, and applications regulated by state agencies as referenced in the Matrix Adoption Tables and as specified in Sections ~~102~~ 1.2 through ~~114~~ 1.14, except where modified by local ordinance pursuant to Section ~~101.8~~ 1.1.8. When adopted by a state agency, the provisions of this code shall be enforced by the appropriate enforcing agency, but only to the extent of authority granted to such agency by the state legislature.*

Note: *See Preface to distinguish the model code provisions from the California provisions.*

1. State-owned buildings, including buildings constructed by the Trustees of the California State University, and to the extent permitted by California laws, buildings designed and constructed by the Regents of the University of California, and regulated by the Building Standards Commission. See Section ~~102~~ 1.2 for additional scope provisions.

2. Local detention facilities regulated by the Corrections Standards Authority. See Section ~~103~~ 1.3 for additional scope provisions.

3. Barbering, cosmetology or electrolysis establishments, acupuncture offices, pharmacies, veterinary facilities and structural pest control locations regulated by the Department of Consumer Affairs. See Section ~~104~~ 1.4 for additional scope provisions.

4. Energy efficiency standards regulated by the California Energy Commission. See Section ~~105~~ 1.5 for additional scope provisions.

5. Dairies and places of meat inspection regulated by the Department of Food and Agriculture. See Section ~~106~~ 1.6 for additional scope provisions.

6. Organized camps, laboratory animal quarters, public swimming pools, radiation protection, commissaries serving mobile food preparation vehicles and wild animal quarantine facilities regulated by the Department of Public Health ~~Services~~. See Section ~~107~~ 1.7 for additional scope provisions.

7. Hotels, motels, lodging houses, apartment houses, dwellings, dormitories, condominiums, shelters for homeless persons, congregate residences, employee housing, factory-built housing and other types of dwellings containing sleeping accommodations with or without common toilets or cooking facilities. See Section ~~108.2.1.1~~ 1.8.2.1.1 for additional scope provisions.

8. Accommodations for persons with disabilities in buildings containing newly constructed covered multifamily dwellings, new common use spaces serving existing covered multifamily dwellings, additions to existing buildings where the addition alone meets the definition of ~~a "covered multifamily dwelling"~~ "COVERED MULTIFAMILY DWELLINGS" and common-use spaces serving covered multifamily dwellings, which are regulated by the Department of Housing and Community Development. See Section ~~108.2.1.2~~ 1.8.2.1.2 for additional scope provisions.

9. Permanent buildings and permanent accessory buildings or structures constructed within mobilehome parks and special occupancy parks regulated by the Department of Housing and Community Development. See Section ~~108.2.1.3~~ 1.8.2.1.3 for additional scope provisions.

10. Accommodations for persons with disabilities regulated by the Division of the State Architect. See Section ~~109.1~~ 1.9.1 for additional scope provisions.

11. Public elementary and secondary schools, community college buildings and state-owned or state-leased essential service buildings regulated by the Division of the State Architect. See Section ~~109.2~~ 1.9.2 for additional scope provisions.

12. Qualified historical buildings and structures and their associated sites regulated by the State Historical Building Safety Board with the Division of the State Architect. See Section ~~109.3~~ 1.9.3 for additional scope provisions.

13. General acute care hospitals, acute psychiatric hospitals, skilled nursing and/or intermediate care facilities, clinics licensed by the Department of Public Health and correctional treatment centers regulated by the Office of Statewide Health Planning and Development. See Section ~~110~~ 1.10 for additional scope provisions.

14. Applications regulated by the Office of the State Fire Marshal include, but are not limited to, the following in accordance with Section ~~111~~ 1.11:

~~14.~~1 Buildings or structures used or intended for use as an:

- *~~14.~~1.1 Asylum, jail.*
- *~~14.~~1.2 Mental hospital, hospital, home for the elderly, children's nursery, children's home or institution , school or any similar occupancy of any capacity.*
- *~~14.~~1.3 Theater, dancehall, skating rink, auditorium, assembly hall, meeting hall, nightclub, fair building or similar place of assemblage where 50 or more persons may gather together in a building, room or structure for the purpose of amusement, entertainment, instruction, deliberation, worship, drinking or dining, awaiting transportation, or education.*
- *~~14.~~1.4 Small family day care homes, large family day care homes, residential facilities and residential facilities for the elderly, residential care facilities.*
- *~~14.~~1.5 State institutions or other state-owned or state-occupied buildings.*
- *~~14.~~1.6 High rise structures.*
- *~~14.~~1.7 Motion picture production studios.*
- *~~14.~~1.8 Organized camps.*
- *~~14.~~1.9 Residential structures.*

~~14.~~2 Tents, awnings or other fabric enclosures used in connection with any occupancy.
~~14.~~3. Fire alarm devices, equipment and systems in connection with any occupancy.
~~14.4~~. Hazardous materials, flammable and combustible liquids.
~~14.~~5. Public school automatic fire detection, alarm and sprinkler systems.
~~14.~~6. Wildland-urban interface fire areas.

15. Public libraries constructed and renovated using funds from the California Library Construction and Renovation Bond Act of 1988 and regulated by the State Librarian. See Section ~~112~~ 1.12 for additional scope provisions.

16. Graywater systems regulated by the Department of Water Resources. See Section ~~113~~ 1.13 for additional scope provisions.

17. For applications listed in Section ~~109.1~~ 1.9.1 regulated by the Division of State Architect--Access Compliance, outdoor environments and uses shall be classified according to accessibility uses described in Chapters 11A, 11B and 11C.

18. Marine Oil Terminals regulated by the California State Lands Commission. See Section ~~114~~ 1.14 for additional scope provisions.

~~**101.4**~~ **1.1.4 Appendices.** Provisions contained in the appendices of this code shall not apply unless specifically adopted by a state agency or adopted by a local enforcing agency in compliance with Health and Safety Code Section ~~18938(b)~~ 18901 et seq. for Building Standards Law, Health and Safety Code Section 17950 for State Housing Law and Health and Safety Code Section 13869.7 for Fire Protection Districts. See Section ~~101.8~~ 1.1.8 of this code.

~~**101.5**~~ **1.1.5 Referenced codes.** The codes, standards and publications adopted and set forth in this code, including other codes, standards and publications referred to therein are, by title and date of publication, hereby adopted as standard reference documents of this code. When this code does not specifically cover any subject related to building design and construction, recognized architectural or engineering practices shall be employed. The National Fire Codes, standards and the Fire Protection Handbook of the National Fire Protection Association are permitted to be used as authoritative guides in determining recognized fire prevention engineering practices.

~~**101.6**~~ **1.1.6 Non-building standards, orders and regulations.** Requirements contained in the International Building Code, or in any other referenced standard, code or document, which are not building standards as defined in Health and Safety Code Section 18909, shall not be construed as part of the provisions of this code. For non-building standards, orders, and regulations, see other titles of the California Code of Regulations.

~~**101.7**~~ **1.1.7 Order of precedence and use.**

~~**101.7.1**~~ **1.1.7.1 Differences.** In the event of any differences between these building standards and the standard reference documents, the text of these building standards shall govern.

~~**101.7.2**~~ **1.1.7.2 Specific provisions.** Where a specific provision varies from a general provision, the specific provision shall apply.

~~**101.7.3**~~ **1.1.7.3 Conflicts.** When the requirements of this code conflict with the requirements of any other part of the California Building Standards Code, Title 24, the most restrictive requirements shall prevail.

~~**101.8**~~ **1.1.8 City, county or city and county amendments, additions or deletions.**
The provisions of this code do not limit the authority of city, county or city and county governments to establish more restrictive and reasonably necessary differences to the provisions contained in this code pursuant to complying with Section ~~101.8.1~~ 1.1.8.1. The effective date of amendments, additions or deletions to this code ~~of~~ by city ~~cities~~, county ~~counties~~ or city and county ~~counties~~ filed pursuant to Section ~~101.8.1~~ 1.1.8.1 shall be the date filed. However, in no case shall the amendments, additions or deletions to this code be effective any sooner than the effective date of this code.

Local modifications shall comply with Health and Safety Code Section 18941.5 for Building Standards Law, Health and Safety Code Section 17958 for State Housing Law or Health and Safety Code Section 13869.7 for Fire Protection Districts.

~~101.8.1~~ 1.1.8.1 Findings and filings.

1. *The city, county or city and county shall make express findings for each amendment, addition or deletion based upon climatic, topographical or geological conditions.*

   Exception: *Hazardous building ordinances and programs mitigating unreinforced masonry buildings.*

2. *The city, county or city and county shall file the amendments, additions or deletions expressly marked and identified as to the applicable findings. Cities, counties, cities and counties, and fire departments shall file the amendments, additions or deletions, and the findings with the California Building Standards Commission at 2525 Natomas Park Drive, Suite 130, Sacramento, CA 95833.*

3. *Findings prepared by fire protection districts shall be ratified by the local city, county or city and county and filed with the California Department of Housing and Community Development, Division of Codes and Standards, P.O. Box 1407, Sacramento, CA 95812-1407 ~~at~~ or 1800 3rd Street, Room 260, Sacramento, CA ~~95814~~ 95811.*

~~101.9~~ 1.1.9 Effective date of this code*. Only those standards approved by the California Building Standards Commission that are effective at the time an application for building permit is submitted shall apply to the plans and specifications for, and to the construction performed under, that permit. For the effective dates of the provisions contained in this code, see the History Note page of this code.*

~~101.10~~ 1.1.10 Availability of codes. *At least one ~~entire~~ complete copy each of Titles 8, 19, 20, 24 and 25 with all revisions shall be maintained in the office of the building official responsible for the administration and enforcement of this code. Each state department concerned and each city, county or city and county shall have an up-to-date copy of the code available for public inspection. See Health and Safety Code Section 18942 (d)(1) and (2).*

~~101.11~~ 1.1.11 Format. *This part fundamentally adopts the International Building Code by reference on a chapter-by-chapter basis. Such adoption is reflected in the Matrix Adoption Table of each chapter of this part. When the Matrix Adoption Tables make no reference to a specific chapter of the International Building Code such chapter of the International Building Code is not adopted as a portion of this code.*

~~101.12~~ 1.1.12 Validity. *If any chapter, section, subsection, sentence, clause or phrase of this code is for any reason held to be unconstitutional, contrary to statute, exceeding the authority of the state as stipulated by statutes or otherwise inoperative, such decision shall not affect the validity of the remaining portion of this code.*

SECTION ~~108~~ 1.8
DEPARTMENT OF HOUSING AND COMMUNITY DEVELOPMENT

~~108.1~~ 1.8.1 Purpose. *The purpose of this code is to establish the minimum requirements necessary to protect the health, safety and general welfare of the occupants and the public by governing accessibility, erection, construction, reconstruction, enlargement, conversion, alteration, repair, moving, removal, demolition, occupancy, use, height, court, area, sanitation, ventilation, maintenance~~,~~ and safety to life and property from fire and other hazards attributed to the built environment.*

SECTION 1.8.2
AUTHORITY AND ABBREVIATIONS

~~108.2 Authority and abbreviations~~.

~~108.2.1~~ 1.8.2.1 General. *The Department of Housing and Community Development is authorized by law to promulgate and adopt building standards and regulations for several types of building applications. These applications are grouped and identified by abbreviation in the Matrix Adoption Tables to show which model code sections and amendments are applicable to each application. The applications under the authority of the Department of Housing and Community Development are listed in Sections ~~108.2.1.1~~ 1.8.2.1.1 through ~~108.2.1.3~~ 1.8.2.1.3.*

Note: See the California Residential Code for detached one- and two-family dwellings and townhouses.

***~~108.2.1.1~~ 1.8.2.1.1* Housing construction.** *Application –Hotels, motels, lodging houses, apartment houses, dwellings, dormitories, condominiums, shelters for homeless persons, congregate residences, employee housing, factory-built housing and other types of dwellings containing sleeping accommodations with or without common toilet or cooking facilities including accessory buildings, facilities, and uses thereto. Sections of this code which pertain to applications listed in this section are identified in the Matrix Adoption Table using the abbreviation "HCD 1."*

***Enforcing Agency**–Local building department or the Department of Housing and Community Development.*

***Authority cited**–Health and Safety Code Sections 17040, 17050, 17920.9, 17921, 17921.3, 17921.6, 17921.10, 17922, 17922.6, 17922.12, 17927, 17928, 17959.6, 18300, 18552, 18554, 18620, 18630, 18640, 18670, 18690, 18691, 18865, 18871.3, 18871.4, 18873, 18873.1, 18873.2, 18873.3, 18873.4, 18873.5, 18938.3, 18944.11 and 19990; and Government Code Section 12955.1.*

***Reference**–Health and Safety Code Sections 17000 through ~~17060~~ 17062.5, 17910 through ~~17990~~ 17995.5, 18200 through 18700, 18860 through 18874, and Sections 19960 through 19997; and Government Code Sections 12955.1 and 12955.1.1.*

***~~108.2.1.2~~ 1.8.2.1.2* Housing accessibility.** *Application – Covered multifamily dwellings ~~units~~ as defined in Chapter 11A including, but not limited to, lodging houses, dormitories, timeshares, condominiums, shelters for homeless persons, congregate residences, apartment houses, dwellings, employee housing, factory-built housing and other types of dwellings containing sleeping accommodations with or without common toilet or cooking facilities.*

Sections of this code identified in the Matrix Adoption Table by the abbreviation "HCD 1-AC" require specific accommodations for "P~~p~~ersons with ~~physical~~ disabilities"~~,~~ as defined in Chapter 11A. The application of such provisions shall be in conjunction with other requirements of this code and apply only to ~~Group R Occupancies which are~~ newly constructed "C~~c~~overed multifamily dwellings" as defined in Chapter 11A of the California Building Code. "HCD 1-AC" applications include, but are not limited to, the following:

1. *All newly constructed "C~~c~~overed multifamily dwellings" as defined in Chapter 11A.*

2. *New "C~~c~~ommon use areas" as defined in Chapter 11A serving existing covered multifamily dwellings.*

3. *Additions to existing buildings, where the addition alone meets the definition of ~~a~~ "Covered multifamily dwellings" as defined in Chapter 11A.*

4. *Common use areas serving covered multifamily dwellings.*

5. *Where any portion of a building's exterior is preserved, but the interior of the building is removed, including all structural portions of floors and ceilings, the building is considered a new building for determining the application of Chapter 11A.*

"HCD 1-AC" building standards generally do not apply to public use areas, public accommodations such as hotels and motels. Public use areas, public accommodations and housing which is publicly funded as defined in Chapter~~s~~ 2~~, 11A and 11B~~ of this code are subject to the Division of the State Architect (DSA-AC) and are referenced in Section ~~109.1~~ 1.9.1.

***Enforcing Agency**–Local building department or the Department of Housing and Community Development.*

***Authority cited**–Health and Safety Code Sections 17040, 17050, 17920.9, 17921, 17921.3, 17921.6, 17921.10, 17922, 17922.6, 17922.12, 17927, 17928, 17959.6, 18300, 18552, 18554, 18620, 18630, 18640, 18670, 18690, 18691, 18865, 18871.3, 18871.4, 18873, 18873.1, 18873.2, 18873.3, 18873.4, 18873.5, 18938.3, 18944.11 and 19990; and Government Code Section 12955.1.*

***Reference**–Health and Safety Code Sections 17000 through ~~17060~~ 17062.5, 17910 through ~~17990~~ 17995.5, 18200 through 18700, 18860 through 18874, and 19960 through 19997; and Government Code Sections 12955.1 and 12955.1.1.*

***~~108.2.1.3~~ 1.8.2.1.3* Permanent buildings in mobilehome parks and special occupancy parks.** *Application –Permanent buildings, and permanent accessory buildings or structures, constructed within mobilehome parks and special occupancy parks that are under the control and ownership of the park operator. Sections of this code which pertain to applications listed in this section are identified in the Matrix Adoption Table using the abbreviation "HCD 2."*

***Enforcing Agency**–Local building department or other local agency responsible for the enforcement of Health and Safety Code, Division 13, Part 2.1, commencing with Section 18200 for mobilehome parks and Health and Safety Code, Division 13, Part 2.3, commencing with Section 18860 for special occupancy parks; or the Department of Housing and Community Development.*

***Authority cited**--Health and Safety Code Sections 17040, 17050, 17920.9, 17921, 17921.3, 17921.6, 17821.10, 17922, 17922.6, 17922.12, 17927, 17928, 17959.6, 18300, 18552, 18554, 18620, 18630, 18640, 18670, 18690, 18691, ~~and~~ 18865, 18871.3, 18871.4, 18873, 18873.1, 18873.2, 18873.3, 18873.4, 18873.5, 18938.3, 18944.11 and 19990; and Government Code Section 12955.1.*

***Reference**--Health and Safety Code Sections 17000 through 17062.5, 17910 through 17995.5, 18200 through 18700, ~~and~~ 18860 through 18874, and 19960 through 19997; and Government Code Sections 12955.1 and 12955.1.1.*

SECTION ~~108.3~~ 1.8.3
LOCAL ENFORCING AGENCY

***~~108.3.1~~ 1.8.3.1* Duties and powers.** *The building department of every city, county or city and county shall enforce all the provisions of law, this code, and the other rules and regulations promulgated by the Department of Housing and Community Development pertaining to the installation, erection, construction, reconstruction, movement, enlargement, conversion, alteration, repair, removal, demolition or arrangement of apartment houses, hotels, motels, lodging houses and dwellings, including accessory buildings, facilities and uses thereto.*

The provisions regulating the erection and construction of dwellings and appurtenant structures shall not apply to existing structures as to which construction is commenced or approved prior to the effective date of these regulations. Requirements relating to use, maintenance and occupancy shall apply to all dwellings and appurtenant structures approved for construction or constructed before or after the effective date of this code.

For additional information regarding the use and occupancy of existing buildings and appurtenant structures, see California Code of Regulations, Title 25, Division 1, Chapter 1, Subchapter 1, commencing with Article 1, Section 1.

***~~108.3.2~~ 1.8.3.2* Laws, rules and regulations.** *Other than the building standards contained in this code, and notwithstanding other provisions of law, the statutory authority and location of the laws, rules, and regulations to be enforced by local enforcing agencies are listed by statute in Sections ~~108.3.2.1~~ 1.8.3.2.1 through ~~108.3.2.5~~ 1.8.3.2.5 below:*

***~~108.3.2.1~~ 1.8.3.2.1* State Housing Law.** *Refer to the State Housing Law, California Health and Safety Code, Division 13, Part 1.5, commencing with Section 17910 and California Code of Regulations, Title 25, Division 1, Chapter 1, Subchapter 1, ~~Article 1,~~ commencing with Section 1, for the erection, construction, reconstruction, movement, enlargement, conversion, alteration, repair, removal, demolition or arrangement of apartment houses, hotels, motels, lodging houses and dwellings, including accessory buildings, facilities, and uses thereto.*

***~~108.3.2.2~~ 1.8.3.2.2* Mobilehome Parks Act.** *Refer to the Mobilehome Parks Act, California Health and Safety Code, Division 13, Part 2.1, ~~Article 1,~~ commencing with Section 18200 and California Code of Regulations, Title 25, Division 1, Chapter 2, commencing with Section 1000 for mobilehome park administrative and enforcement authority, permits, plans, fees, violations, inspections and penalties both within and outside mobilehome parks.*

***Exception:** Mobilehome parks where the Department of Housing and Community Development is the enforcing agency.*

~~108.3.2.3~~ 1.8.3.2.3 **Special Occupancy Parks Act.** *Refer to the Special Occupancy Parks Act, California Health and Safety Code, Division 13, Part 2.3, commencing with Section 18860 and California Code of Regulations, Title 25, Division 1, Chapter 2.2, ~~Article 1,~~ commencing with Section 2000 for special occupancy park administrative and enforcement authority, permits, fees, violations, inspections and penalties both within and outside of special occupancy parks.*

Exception: *Special occupancy parks where the Department of Housing and Community Development is the enforcing agency.*

~~108.3.2.4~~ 1.8.3.2.4 **Employee Housing Act.** *Refer to the Employee Housing Act, California Health and Safety Code, Division 13, Part 1, commencing with Section 17000 and California Code of Regulations, Title 25, Division 1, Chapter 1, Subchapter 3, ~~Article 1,~~ commencing with Section 600 for employee housing administrative and enforcement authority, permits, fees, violations, inspections and penalties.*

~~108.3.2.5~~ 1.8.3.2.5 **Factory-Built Housing Law.** *Refer to the Factory-Built Housing Law, California Health and Safety Code, Division 13, Part 6, commencing with Section 19960 and California Code of Regulations, Title 25, Division 1, Chapter 3, Subchapter 1, ~~Article 1,~~ commencing with Section 3000 for factory-built housing administrative and enforcement authority, permits, fees, violations, inspections and penalties.*

SECTION ~~108.4~~ 1.8.4
PERMITS, FEES, APPLICATIONS AND INSPECTIONS

~~108.4.1~~ 1.8.4.1 **Permits.** *A written construction permit shall be obtained from the enforcing agency prior to the erection, construction, reconstruction, installation, moving or alteration of any building or structure.*

Exceptions:

1. *Work exempt from permits as specified in ~~Appendix~~ Chapter 1, Administration, Division II, Section 105.2.*

2. *Changes, alterations, or repairs of a minor nature not affecting structural features, egress, sanitation, safety or accessibility as determined by the enforcing agency.*

Exemptions from permit requirements shall not be deemed to grant authorization for any work to be done in any manner in violation of other provisions of law or this code.

~~108.4.2~~ 1.8.4.2 **Fees.** *Subject to other provisions of law, the governing body of any city, county or city and county may prescribe fees to defray the cost of enforcement of rules and regulations promulgated by the Department of Housing and Community Development. The amount of the fees shall not exceed the amount reasonably necessary to administer or process permits, certificates, forms or other documents, or to defray the costs of enforcement. For additional information, see the State Housing Law, Health and Safety Code, Division 13, Part 1.5, Section 17951 and California Code of Regulations, Title 25, Division 1, Chapter 1, Subchapter 1, Article 3, commencing with Section 6.*

~~108.4.3~~ 1.8.4.3 **Plan review and time limitations.** *Subject to other provisions of law, provisions related to plan checking, prohibition of excessive delays and contracting with or employment of private parties to perform plan checking are set forth in the State Housing Law, Health and Safety Code Section 17960.1, and for employee housing, in Health and Safety Code Section 17021.*

~~108.4.3.1~~ 1.8.4.3.1 **Retention of plans.** *The building department of every city, county or city and county shall maintain an official copy, microfilm, electronic or other type of photographic copy of the plans of every building, during the life of the building, for which the department issued a building permit.*

Exceptions:

1. *Single or multiple dwellings not more than two stories and basement in height.*
2. *Garages and other structures appurtenant to buildings listed in Exception 1.*
3. *Farm or ranch buildings appurtenant to buildings listed in Exception 1.*
4. *Any one-story building where the span between bearing walls does not exceed 25 feet (7620 mm), except a steel frame or concrete building.*

All plans for common interest developments as defined in Section 1351 of the California Civil Code shall be retained. For additional information regarding plan retention and reproduction of plans by an enforcing agency, see Health and Safety Code Sections 19850 ~~and 19851~~ through 19852.

***~~108.4.4~~ 1.8.4.4* Inspections.** *Construction or work for which a permit is required shall be subject to inspection by the building official and such construction or work shall remain accessible and exposed for inspection purposes until approved. Approval as a result of an inspection shall not be construed to be an approval of a violation of the provisions of this code or other regulations of the Department of Housing and Community Development. Required inspections are listed in ~~Appendix~~ Chapter 1, Administration, Division II, Sections ~~109.3.1~~ 110.3.1 through ~~109.3.6~~ 110.3.6, ~~109.3.8~~ 110.3.8, ~~109.3.9~~ 110.3.9 and ~~109.3.10~~ 110.3.10.*

SECTION ~~108.5~~ 1.8.5
~~RIGHT OF ENTRY~~ RIGHT OF ENTRY FOR ENFORCEMENT

***~~108.5.1~~ 1.8.5.1* General.** *Subject to other provisions of law, officers and agents of the enforcing agency may enter and inspect public and private properties to secure compliance with the rules and regulations promulgated by the Department of Housing and Community Development. For limitations and additional information regarding enforcement, see the following:*

1. For applications subject to the State Housing Law as referenced in Section ~~108.3.2.1~~ 1.8.3.2.1 of this code, refer to Health and Safety Code, Division 13, Part 1.5, commencing with Section 17910 ~~Sections 17970 through 17972~~ and California Code of Regulations, Title 25, Division 1, Chapter 1, Subchapter 1, commencing with Section 1.

2. For applications subject to the Mobilehome Parks Act as referenced in Section ~~108.3.2.2~~ 1.8.3.2.2 of this code, refer to ~~the~~ Health and Safety Code, Division 13, Part 2.1, commencing with Section 18200 and California Code of Regulations, Title 25, Division 1, Chapter 2, commencing with Section 1000.

3. For applications subject to the Special Occupancy Parks Act as referenced in Section ~~108.3.2.3~~ 1.8.3.2.3 of this code, refer to Health and Safety Code, Division 13, Part 2.3, commencing with Section 18860 and California Code of Regulations, Title 25, Division 1, Chapter 2.2, commencing with Section 2000.

4. For applications subject to the Employee Housing Act as referenced in Section ~~108.3.2.4~~ 1.8.3.2.4 of this code, refer to Health and Safety Code, Division 13, Part 1, commencing with Section ~~17052~~ 17000 and California Code of Regulations, Title 25, Division 1, Chapter 1, Subchapter 3, commencing with Section 600.

5. For applications subject to the Factory-Built Housing Law as referenced in Section ~~108.3.2.5~~ 1.8.3.2.5 of this code, refer to Health and Safety Code, Division 13, Part 6, commencing with Section~~s~~ 19960 ~~through 19997~~ and California Code of Regulations, Title 25, Division 1, Chapter 3, Subchapter 1, commencing with Section 3000.

SECTION ~~108.6~~ 1.8.6
LOCAL MODIFICATION BY ORDINANCE OR REGULATION

***~~108.6.1~~ 1.8.6.1* General.** *Subject to other provisions of law, a city, county or city and county may make changes to the provisions adopted by the Department of Housing and Community Development. If any city, county or city and county does not amend, add or repeal by local ordinances or regulations the provisions published in this code or other regulations promulgated by the Department of Housing and Community Development, those provisions shall be applicable and shall become effective 180 days after publication by the California Building Standards Commission. Amendments, additions and deletions to this code adopted by a city, county or city and county pursuant to California Health and Safety Code Sections 17958.5, 17958.7 and 18941.5, together with all applicable portions of this code, shall also become effective 180 days after publication of the California Building Standards Code by the California Building Standards Commission.*

***~~108.6.2~~ 1.8.6.2* Findings, filings, and rejections of local modifications.** *Prior to making any modifications or establishing more restrictive building standards, the governing body shall make express findings and filings, as required by California Health and Safety Code Section 17958.7, showing that such modifications are reasonably necessary due to local climatic, geological, or topographical conditions. No modification shall become effective or operative unless the following requirements are met:*

1. The express findings shall be made available as a public record.

2. A copy of the modification and express finding, each document marked to cross-reference the other, shall be filed with the California Building Standards Commission for ~~cities, counties or cites and counties,~~ a city, county or city and county and with the Department of Housing and Community Development for fire protection districts.

3. The California Building Standards Commission has not rejected the modification or change.

Nothing in this section shall limit the authority of fire protection districts pursuant to California Health and Safety Code Section 13869.7(a).

SECTION ~~108.7~~ 1.8.7
ALTERNATE MATERIALS, DESIGNS, TESTS AND METHODS OF CONSTRUCTION

***~~108.7.1~~ 1.8.7.1* General.** *The provisions of this code~~,~~ as adopted by the Department of Housing and Community Development are not intended to prevent the use of any alternate material, appliance, installation, device, arrangement, ~~method,~~ design or method of construction not specifically prescribed by this code. Consideration and approval of alternates shall comply with Section ~~108.7.2~~ 1.8.7.2 for local building departments and Section ~~108.7.3~~ 1.8.7.3 for the Department of Housing and Community Development.*

***~~108.7.2~~ 1.8.7.2* Local building departments.** *The building department of any city, county or city and county may approve alternates for use in the erection, construction, reconstruction, movement, enlargement, conversion, alteration, repair, removal, ~~or~~ demolition or arrangement of an apartment house, hotel, motel, lodging house, dwelling, or an accessory structure, except for the following:*

1. Structures located in mobilehome parks as defined in California Health and Safety Code Section 18214.

2. Structures located in special occupancy parks as defined in California Health and Safety Code Section 18862.43.

3. Factory-built housing as defined in California Health and Safety Code Section 19971.

***~~108.7.2.1~~ 1.8.7.2.1* Approval of alternates.** *The consideration and approval of alternates by a local building department shall comply with the following procedures and limitations:*

1. The approval shall be granted on a case-by-case basis.

2. Evidence shall be submitted to substantiate claims that the proposed alternate, in performance, safety and protection of life and health, conforms to, or is at least equivalent to, the standards contained in this code and other rules and regulations promulgated by the Department of Housing and Community Development.

3. The local building department may require tests performed by an approved testing agency at the expense of the owner or owner's agent as proof of compliance.

4. If the proposed alternate is related to accessibility in covered multifamily dwellings or in facilities serving "C~~c~~overed multifamily dwellings" as defined in Chapter 11A, the proposed alternate must also meet the threshold set for "Equivalent ~~F~~facilitation" as defined in Chapter 11A.

For additional information regarding approval of alternates by a building department pursuant to the State Housing Law, see California Health and Safety Code Section 17951(e) and California Code of Regulations, Title 25, Division 1, Chapter 1 , Subchapter 1.

***~~108.7.3~~ 1.8.7.3* Department of Housing and Community Development**. *The Department of Housing and Community Development may approve alternates for use in the erection, construction, reconstruction, movement, enlargement, conversion, alteration, repair, removal or demolition of an apartment house, hotel, motel, lodging house, dwelling or an accessory thereto. The consideration and approval of alternates shall comply with the following:*

1. The department may require tests at the expense of the owner or owner's agent to substantiate compliance with the California Building Standards Code.

2. The approved alternate shall, for its intended purpose, be at least equivalent in performance and safety to the materials, designs, tests or methods of construction prescribed by this code.

SECTION ~~108.8~~ 1.8.8
APPEALS BOARD

***~~108.8.1~~ 1.8.8.1* General.** *Every city, county or city and county shall establish a local appeals board and a housing appeals board. The local appeals board and housing appeals board shall each be comprised of at least five voting members that shall serve at the pleasure of the city, county or city and county. ~~Appointments~~ Appointees shall not be employees of the jurisdiction and shall be ~~consist of members who are~~ qualified and specifically knowledgeable in the California Building Standards Codes and applicable local ordinances.*

***~~108.8.2~~ 1.8.8.2* Definitions.** *The following terms shall for the purposes of this section have the meaning shown.*

HOUSING APPEALS BOARD. *The board or agency of a city, county or city and county which is authorized by the governing body of the city, county or city and county to hear appeals regarding the requirements of the city, county or city and county relating to the use, maintenance and change of occupancy of buildings and structures, including requirements governing alteration, additions, repair, demolition and moving. In any area in which there is no such board or agency, "Housing appeals board" means the local appeals board having jurisdiction over the area.*

LOCAL APPEALS BOARD. *The board or agency of a city, county or city and county which is authorized by the governing body of the city, county or city and county to hear appeals regarding the building requirements of the city, county or city and county. In any area in which there is no such board or agency, "Local appeals board" means the governing body of the city, county or city and county having jurisdiction over the area.*

***~~108.8.3~~ 1.8.8.3* Appeals.** *Except as otherwise provided in law, any person, firm or corporation adversely affected by a decision, order or determination by a city, county or city and county relating to the application of building standards published in the California Building Standards Code, or any other applicable rule or regulation adopted by the Department of Housing and Community Development, or any lawfully enacted ordinance by a city, county or city and county, may appeal the issue for resolution to the local appeals board or housing appeals board as appropriate.*

The local appeals board shall hear appeals relating to new building construction and the housing appeals board shall hear appeals relating to existing buildings.

SECTION ~~108.9~~ 1.8.9
UNSAFE BUILDINGS OR STRUCTURES

***~~108.9.1~~ 1.8.9.1* Authority to enforce.** *Subject to other provisions of law, the administration, enforcement, actions, proceedings, abatement, violations and penalties for unsafe buildings and structures are contained in the following statutes and regulations:*

1. For applications subject to the State Housing Law as referenced in Section ~~108.3.2.1~~ 1.8.3.2.1 of this code, refer to Health and Safety Code, Division 13, Part 1.5, commencing with Section~~s~~ 17910 ~~through 17995.5~~ and California Code of Regulations, Title 25, Division 1, Chapter 1, Subchapter 1, commencing with Section 1.

2. For applications subject to the Mobilehome Parks Act as referenced in Section ~~108.3.2.2~~ 1.8.3.2.2 of this code, refer to ~~the~~ Health and Safety Code, Division 13, Part 2.1, commencing with Section 18200~~,~~ and California Code of Regulations, Title 25, Division 1, Chapter 2, commencing with Section 1000.

3. For applications subject to the Special Occupancy Parks Act as referenced in Section ~~108.3.2.3~~ 1.8.3.2.3 of this code, refer to ~~the~~ Health and Safety Code, Division 13, Part 2.3, commencing with Section 18860~~,~~ and California Code of Regulations, Title 25, Division 1, Chapter 2.2, commencing with Section 2000.

4. For applications subject to the Employee Housing Act as referenced in Section ~~108.3.2.4~~ 1.8.3.2.4 of this code, refer to Health and Safety Code, Division 13, Part 1, commencing with Section~~s~~ 17000 ~~through 17062.5~~ and California Code of Regulations, Title 25, Division 1, Chapter 1, Subchapter 3, commencing with Section 600.

5. For applications subject to the Factory-Built Housing Law as referenced in Section ~~108.3.2.5~~ 1.8.3.2.5 of this code, refer to Health and Safety Code, Division 13, Part 6, commencing with Section~~s~~ 19960 ~~through 19997~~ and California Code of Regulations, Title 25, Division 1, Chapter 3, Subchapter 1, commencing with Section 3000.

~~108.9.2~~ 1.8.9.2 Actions and proceedings. *Subject to other provisions of law, punishments, penalties and fines for violations of building standards are contained in the following statutes and regulations:*

1. For applications subject to the State Housing Law as referenced in Section ~~108.3.2.1~~ 1.8.3.2.1 of this code, refer to Health and Safety Code, Division 13, Part 1.5, commencing with Section~~s~~ 17910 ~~17980 through 17995.5~~ and California Code of Regulations, Title 25, Division 1, Chapter 1, Subchapter 1, commencing with Section 1.

2. For applications subject to the Mobilehome Parks Act as referenced in Section ~~108.3.2.2~~ 1.8.3.2.2 of this code, refer to Health and Safety Code, Division 13, Part 2.1, commencing with Section~~s~~ 18200 ~~through 18700~~ and California Code of Regulations, Title 25, Division 1, Chapter 2, commencing with Section 1000.

3. For applications subject to the Special Occupancy Parks Act as referenced in Section ~~108.3.2.3~~ 1.8.3.2.3 of this code, refer to Health and Safety Code, Division 13, Part 2.3, commencing with Section~~s~~ 18860 ~~18866 through 18869~~ and California Code of Regulations, Title 25, Division 1, Chapter 2.2, commencing with Section 2000.

4. For applications subject to the Employee Housing Act as referenced in Section ~~108.3.2.4~~ 1.8.3.2.4 of this code, refer to Health and Safety Code, Division 13, Part 1, commencing with Section~~s~~ 17000 ~~17060 through 17062.5~~ and California Code of Regulations, Title 25, Division 1, Chapter 1, Subchapter 3, commencing with Section 600.

5. For applications subject to the Factory-Built Housing Law as referenced in Section ~~108.3.2.5~~ 1.8.3.2.5 of this code, refer to Health and Safety Code, Division 13, Part 6, commencing with Section~~s~~ 19960 ~~19995 through 19997~~ and California Code of Regulations, Title 25, Division 1, Chapter 3, Subchapter 1, commencing with Section 3000.

SECTION ~~108.10~~ 1.8.10
OTHER BUILDING REGULATIONS

~~108.10.1~~ 1.8.10.1 Existing structures. *Subject to the requirements of California Health and Safety Code Sections 17912, 17920.3, 17922~~(c)~~, 17922.3, 17958.8 and 17958.9, the provisions contained in Chapter 34 relating to existing structures shall only apply as identified in the Matrix Adoption Table under the authority of the Department of Housing and Community Development as listed in Sections ~~108.2.1.1~~ 1.8.2.1.1 through ~~108.2.1.3~~ 1.8.2.1 3 of this code.*

~~108.10.2~~ 1.8.10.2 Moved structures. *Subject to the requirements of California Health and Safety Code Sections 17922.3 and 17958.9, the provisions contained in Chapter 34 relating to a moved residential structure shall only apply as identified in the Matrix Adoption Table under the authority of the Department of Housing and Community Development as listed in Sections ~~108.2.1.1~~ 1.8.2.1.1 through ~~108.2.1.3~~ 1.8.2.1.3 of this code.*

NOTE:
Authority Cited: Health and Safety Code Sections 17040, 17050, 17920.9, 17921, 17921.3, 17921.6, 17921.10, 17922, 17922.6, 17922.12, 17927, 17928, 17959.6, 18300, 18552, 18554, 18620, 18630, 18640, 18670, 18690, 18691, 18865, 18871.3, 18871.4, 18873, 18873.1, 18873.2, 18873.3, 18873.4, 18873.5, 18938.3, 18944.11 and 19990; and Government Code Section 12955.1.

Reference: Health and Safety Code Sections 17000 through 17062.5, 17910 through 17995.5, 18200 through 18700, 18860 through 18874, and 19960 through 19997; and Government Code Sections 12955.1 and 12955.1.1.

1-A. HCD proposes to adopt Sections 105.2 (1) – (13), 110.3.1, 110.3.2, 110.3.3, 110.3.4, 110.3.5, 110.3.6, 110.3.8, 110.3.9 and 110.3.10 without amendments, amend the heading of former "Appendix Chapter 1, Administration," to "Administration, Division II" and amend Section 101.4 as follows:

~~*APPENDIX* CHAPTER 1~~

ADMINISTRATION

DIVISION II

(Chapter 1, Administration, has been relocated from Appendix Chapter 1 and renamed Division II)

~~*Appendix Chapter 1is not adopted by:*~~
~~*California Building Standards Commission*~~
~~*Housing and Community Development*~~
~~*Office of the State Fire Marshal*~~

Sections adopted or amended by state agencies are ~~Except where~~ specifically indicated by an agency banner or identified in the M~~m~~atrix Adoption Table

101.4 Referenced codes. The other codes listed in ~~Appendix Chapter 1,~~ Sections 101.4.1 through 101.4.7 and referenced elsewhere in this code shall be considered part of the requirements of this code to the prescribed extent of each such reference.

NOTE:
Authority Cited: Health and Safety Code Sections 17040, 17050, 17920.9, 17921, 17921.3, 17921.6, 17921.10, 17922, 17922.6, 17922.12, 17927, 17928, 17959.6, 18300, 18552, 18554, 18620, 18630, 18640, 18670, 18690, 18691, 18865, 18871.3, 18871.4, 18873, 18873.1, 18873.2, 18873.3, 18873.4, 18873.5, 18938.3, 18944.11 and 19990; and Government Code Section 12955.1.

Reference: Health and Safety Code Sections 17000 through 17062.5, 17910 through 17995.5, 18200 through 18700, 18860 through 18874, and 19960 through 19997; and Government Code Sections 12955.1 and 12955.1.1.

---

2. HCD proposes to adopt Chapter 2 with amendments as follows:

CHAPTER 2

DEFINITIONS

SECTION 202
DEFINITIONS

ACCESSIBLE. ~~See Section 1102.1~~ ***[HCD 1-AC]*** *See Chapter 11A, Section 1107A.1-A, and Chapter 11B, Section 1102B.*

ACCESSIBLE ROUTE. ~~See Section 1102.1~~ ***[HCD 1-AC]*** *See Chapter 11A, Section 1107A.1-A.*

~~**ACCESSIBLE UNIT**. See Section 1102.1~~

APPROVED. Acceptable to the code official or authority having jurisdiction.

[HCD 1 & HCD 2] *"Approved" means meeting the approval of the enforcing agency, except as otherwise provided by law, when used in connection with any system, material, type of construction, fixture or appliance as the result of investigations and tests conducted by the agency, or by reason of accepted principles or tests by national authorities or technical, health or scientific organizations or agencies.*

***Notes**: [HCD 1 & HCD 2]*

1. *See Health and Safety Code Section 17920 for "Approved" as applied to residential construction and buildings or structures accessory thereto, as referenced in Section ~~108.2.1.1~~ 1.8.2.1.1.*

2. *See Health and Safety Code Section 17921.1 for "Approved" as applied to the use of hotplates in residential construction referenced in Section ~~108.2.1.1~~ 1.8.2.1.1.*

3. *See Health and Safety Code Section 17921.3 for "Approved" as applied to low-flush water closets in residential construction, as referenced in Section ~~108.2.1.1~~ 1.8.2.1.1.*

4. *See Health and Safety Code Section 19966 for "Approved" as applied to factory-built housing as referenced in Section ~~108.3.2.5~~ 1.8.3.2.5.*

5. *See Health and Safety Code Section 18201 for "Approved" as applied to mobilehome parks as referenced in Section ~~108.2~~ 1.8.2.1.3.*

6. *See Health and Safety Code Section 18862.1 for "Approved" as applied to special occupancy parks as referenced in Section ~~108.2~~ 1.8.2.1.3.*

***APPROVED LISTING AGENCY. [HCD 1 & HCD 2]** ~~is a~~Any agency approved by the enforcing agency, unless otherwise provided by ~~statute~~ law, which is in the business of listing and labeling and which makes available at least an annual published report of such listings in which specific information is included that the product has been tested to recognized standards and found to comply.*

***APPROVED TESTING AGENCY. [HCD 1 & HCD 2]** ~~is a~~Any agency, which is determined by the enforcing agency, except as otherwise provided by ~~statute~~ law, to have adequate personnel and expertise to carry out the testing of systems, materials, types of construction, fixtures or appliances.*

***AUTOMATIC DOOR. [HCD 1-AC]** See Chapter 11A, Section 1107~~:~~A.1-A, and Chapter 11B, Section 1102B.*

BUILDING. Any structure used or intended for supporting or sheltering any use or occupancy.

***Exception: [HCD 1, HCD 2 & HCD 1-AC]** For applications listed in Section ~~108.2~~ 1.8.2 regulated by the Department of Housing and Community Development, "Building" shall not include the following:*

1. *Any mobilehome as defined in Health and Safety Code Section 18008.*

2. *Any manufactured home as defined in Health and Safety Code Section 18007.*

3. *Any commercial modular as defined in Health and Safety Code Section 18001.8 or any special purpose commercial modular as defined in Section 18012.5.*

4. *Any recreational vehicle as defined in Section Health and Safety Code 18010.*

5. *Any ~~multi-unit~~ multifamily manufactured ~~housing~~ home as defined in Health and Safety Code Section 18008.7.*

For additional information, see Health and Safety Code Section 18908.

***BUILDING, EXISTING. [HCD 1 & HCD 2]** ~~is a~~A building erected prior to the adoption of this code, or one for which a legal building permit has been issued.*

***CELLULAR CONCRETE. [HCD 1 & HCD 2]** ~~is a~~A lightweight product consisting of portland cement and selected gas-forming chemicals or foaming agents which create homogeneous voids in the hardened concrete.*

CIRCULATION PATH. ~~See Section 1102.1~~ ***[HCD 1-AC]**. See Chapter 11B, Section 1102B.*

~~**COMMON USE.** See Section 1102.1.~~

***DEPARTMENT. [HCD 1 & HCD 2]** ~~is t~~The Department of Housing and Community Development.*

DETACHED SINGLE-FAMILY DWELLING. [HCD 1 & HCD 2] *~~is a~~Any single-family dwelling which is separated from adjacent property lines by 3 feet (914 mm) or more or is separated from adjacent buildings by 6 feet (1829 mm) or more.*

~~DETECTABLE WARNING~~ **DETECTABLE WARNING.** ~~See Section 1102.1.~~ ***[HCD 1-AC]*** *See Chapter 11A, Section 1107A.4-D, and Chapter 11B, Section 1102B.*

DIRECTIONAL SIGN. [HCD 1 & HCD 2] *~~is a~~A publicly displayed notice which indicates by use of words or symbols a recommended direction or route of travel.*

~~**DWELLING UNIT OR SLEEPING UNIT, MULTISTORY.** See Section 1102.1.~~

~~**DWELLING UNIT OR SLEEPING UNIT, TYPE A.** See Section 1102.1.~~

~~**DWELLING UNIT OR SLEEPING UNIT, TYPE B.** See Section 1102.1.~~

EFFICIENCY DWELLING UNIT. [HCD 1] *~~is a~~A dwelling unit containing only one habitable room and includes an efficiency unit as defined by Health and Safety Code Section 17958.1. See Section 1208.4.*

ELEVATOR, PASSENGER. [DSA-AC] *See Chapter 11B, Section 1102B.* ***[HCD 1 & HCD 2]*** *See "PASSENGER ELEVATOR."*

ENFORCEMENT. [HCD 1 & HCD 2] *The applicable section of the Health and Safety Code is repeated here for clarity and reads as follows:*

> ***Section 17920****. "Enforcement" means diligent effort to secure compliance, including review of plans and permit applications, response to complaints, citation of violations, and other legal process. Except as otherwise provided in this part, "~~E~~enforcement" may, but need not, include inspections of existing buildings on which no complaint or permit application has been filed, and effort to secure compliance as to these existing buildings.*

ENFORCING AGENCY. [HCD 1 & HCD 2] *~~is t~~The designated department or agency as specified by statute or regulation.*

~~**FACILITY**. See Section 1102.1~~

FAMILY. [HCD 1] *~~is a~~An individual or two or more persons who are related by blood or marriage~~,~~; or otherwise~~,~~ live together in a dwelling unit.*

GUARD ***[HCD 1 & HCD 2] ~~or~~ OR GUARDRAIL.*** See Section 1002.1.

~~**INTENDED TO BE OCCUPIED AS A RESIDENCE.** See Section 1102.1.~~

LABELED. Equipment, materials or products to which have been affixed a label, seal, symbol or other identifying mark of a nationally recognized testing laboratory, inspection agency or other organization concerned with product evaluation that maintains periodic inspection of the production of the above-labeled items and whose labeling indicates either that the equipment, material or product meets identified standards or has been tested and found suitable for a specified purpose.

[HCD 1 & HCD 2] *"Labeled" means equipment or materials to which has been attached a label, symbol or other identifying mark of an organization, approved by the Department, that maintains a periodic inspection program of production of labeled products, installations, equipment, or materials and by whose labeling the manufacturer indicates compliance with appropriate standards or performance in a specified manner.*

LISTED. Equipment, materials, products or services included in a list published by an organization acceptable to the code official and concerned with evaluation of products or services that maintains periodic inspection of production of listed equipment or materials or periodic evaluation of services and whose listing states either that the equipment, material, product or service meets identified standards or has been tested and found suitable for a specified purpose.

[HCD 1 & HCD 2] *"Listed" means all products that appear in a list published by an approved testing or listing agency. For additional information, see Health and Safety Code Section 17920(h).*

LISTING AGENCY. [HCD 1 & HCD 2] *~~means a~~An agency approved by the department that is in the business of listing and labeling products, materials, equipment and installations tested by an approved testing agency, and that maintains a periodic inspection program on current production of listed products, equipment and installations, and that, at least annually, makes available a published report of these listings. For additional information, see Health and Safety Code Section 17920(i).*

LOBBY. [HCD 1 & HCD 2] *~~is a~~An area not defined as a waiting room at the entrance of a building through which persons must pass.*

LODGING HOUSE. [HCD 1] *~~is a~~Any building or portion thereof containing not more than five guest rooms where rent is paid in money, goods, labor or otherwise.*

~~**MULTILEVEL ASSEMBLY SEATING.** See Section 1102.1.~~

~~**MULTISTORY UNITS.** See Section 1102.1.~~

NORMAL. [HCD 1 & HCD 2] *~~shall mean c~~Conforming to a pattern or standard regarded as usual or typical.*

NOSING ***(~~or NOSE~~ OR NOSE).*** See Section 1002.1. ***[HCD 1-AC]*** *See Chapter 11A, Section 1107A.14-N, and Chapter 11B, Section 1102B.*

PASSENGER ELEVATOR. [HCD 1 & HCD 2] *"Passenger Elevator" is an elevator used primarily to carry persons. For additional information, see California Code of Regulations, ~~Title 24, Part 7, Article 7-6, Section 3009 of the 2001 California Building Code~~ Title 8, Division 1, Chapter 4.*

PASSIVE SOLAR ENERGY COLLECTOR. [HCD 1 & HCD 2] *~~u~~Uses architectural components, rather than mechanical components, to provide heating or cooling for a building interior.*

PEDESTRIAN WAY. [HCD 1-AC] *See Chapter 11A, Section ~~1107A, 16-P~~ 1107A.16-P, and Chapter 11B, Section 1102B.*

PUBLIC ENTRANCE. ~~See Section 1102.1.~~ ***[HCD 1-AC]*** *~~is a~~An entrance that is not a service entrance or a restricted entrance.*

PUBLIC-USE AREAS. ~~See Section 1102.1~~ ***[HCD 1-AC]*** *See Chapter 11A, Section 1107A.16-P, and Chapter 11B, Section 1102B.*

PUBLICLY FUNDED. [HCD 1 & HCD 2] *~~f~~For the purpose of housing, all buildings, structures, sidewalks, curbs and related facilities constructed in the state and used or intended to be used as a public use area, as defined in Section 1107A.16-P, shall comply with the accessibility standards of Chapter 11B of this code when state, county or municipal funds, or funds of any political subdivision of the state are used.*

RAMP. See Section 1002.1 [***HCD 1-AC]*** *See Chapter 11A, Section 1107A.18-R, and Chapter 11B, Section 1102B.*

RECOMMEND. [HCD 1 & HCD 2] *~~d~~Does not require mandatory acceptance, but identifies a suggested action that shall be considered for the purpose of providing a greater degree of accessibility to persons with disabilities.*

RESTRICTED ENTRANCE. ~~See Section 1102.1.~~ ***[HCD 1, HCD 2 & HCD 1-AC]*** *~~is a~~An entrance that is made available for common use on a controlled basis, but is not public use, and that is not a service entrance.*

RISER. [~~HCD 1 & HCD 2~~ HCD 1-AC] *See Chapter 11A, Section 1107A.18-R, and Chapter 11B, Section 1102B.*

SANITARY FACILITY. [HCD 1 & HCD 2] *~~is a~~Any single water closet, urinal, lavatory, bathtub or shower, or a combination thereof, together with the room or space in which they are housed.*

~~**SELF-SERVICE STORAGE FACILITY.** See Section 1102.1.~~

SERVICE ENTRANCE. ~~See Section 1102.1~~ ***[HCD 1-AC]*** *~~is a~~An entrance intended primarily for the delivery of goods or services.*

SHOPPING CENTER (~~or~~ OR SHOPPING MALL). [HCD 2] *See Chapter 11B, Section 1102B.*

SIDEWALK. [HCD 1-AC] *~~is a~~A surfaced pedestrian way contiguous to a street used by the public. (As differentiated from the definition of "Walk" in Chapter 11A, Section 1107A.23-W, and Chapter 11B, Section 1102B.)*

SINGLE-ACCOMMODATION SANITARY FACILITY. [~~HCD 1 & HCD 2~~ HCD 1-AC] *~~is a~~A room that has not more than one of each type of sanitary fixture, is intended for use by only one person at a time, has no partition around the toilet, and has a door that can be locked on the inside by the room occupant.*

SITE. ~~See Section 1102.1.~~ ***[HCD 1 & HCD 2]*** *~~is a~~A parcel of land bounded by a property line or a designated portion of a public right-of-way.*

SITE DEVELOPMENT. [HCD 1-AC] *~~is "e~~"On-site" and "off-site" work, including, but not limited to, walks, sidewalks, ramps, curbs, curb ramps, parking facilities, stairs, planting areas, pools, promenades, exterior gathering or assembly areas and raised or depressed paved areas.*

SOUND TRANSMISSION CLASS (STC). [HCD 1 & HCD 2] *See Chapter 12, Section 1207.2.*

SPACE. [HCD 2] *~~is a~~A definable area, e.g., a room, toilet room, hall, assembly area, entrance, storage room, alcove, courtyard, or lobby.*

TACTILE. [~~HCD2~~ HCD 1-AC] *~~d~~Describes an object that can be perceived using the sense of touch.*

TESTING AGENCY. [HCD 1 & HCD 2] *~~means a~~An agency approved by the department as qualified and equipped for testing of products, materials, equipment and installations in accordance with nationally recognized standards. For additional information, see Health and Safety Code Section 17920(m).*

TRANSIENT LODGING. [HCD 1-AC] *See Chapter 11A, Section 1107A.20-T, and Chapter 11B, Section 1102B ~~and Chapter 11A, Section 1107A.20-T~~.*

~~***TREAD DEPTH. [HCD 1-AC]*** *See Chapter 11A, Section 1107A.20-T, and Chapter 11B, Section 1102B.*~~

~~***TREAD RUN. [HCD 1-AC]*** *See Chapter 11A, Section 1107A.20-T, and Chapter 11B, Section 1102B.*~~

~~**TYPE A UNIT. See Section 1102.1.**~~

~~**TYPE B UNIT. See Section 1102.1.**~~

~~**VEHICULAR OR PEDESTRIAN ARRIVAL POINTS**~~ ***VEHICULAR OR PEDESTRIAN ARRIVAL POINTS. [HCD 1-AC]*** *See Chapter 11A, Section 1107.22-V.*

WALK. [HCD 1-AC] *See Chapter 11A, Section 1107A.23-W, and Chapter 11B, Section 1102B.*

WHEELCHAIR. [HCD 1-AC] *~~is a~~A chair mounted on wheels to be propelled by its occupant manually or with the aid of electric power, of a size and configuration conforming to the recognized standard models of the trade.*

WHEELCHAIR SPACE. ~~See Section 1102.1~~ ***[HCD 1-AC]*** *~~is s~~Space for a single wheelchair and its occupant.*

NOTE:

Authority Cited: Health and Safety Code Sections 17040, 17050, 17920.9, 17921, 17921.3, 17921.6, 17921.10, 17922, 17922.6, 17922.12, 17927, 17928, 17959.6, 18300, 18552, 18554, 18620, 18630, 18640, 18670, 18690, 18691, 18865, 18871.3, 18871.4, 18873, 18873.1, 18873.2, 18873.3, 18873.4, 18873.5, 18938.3, 18944.11 and 19990; and Government Code Section 12955.1.

Reference: Health and Safety Code Sections 17000 through 17062.5, 17910 through 17995.5, 18200 through 18700, 18860 through 18874, and 19960 through 19997; and Government Code Sections 12955.1 and 12955.1.1.

3. HCD proposes to adopt Chapter 3 with amendments as follows:

CHAPTER 3

USE AND OCCUPANCY CLASSIFICATION

SECTION 308
INSTITUTIONAL GROUP I

308.2 Group I-1. This occupancy shall include buildings, structures or parts thereof housing more than 16 persons, on a 24-hour basis, who because of age, mental disability or other reasons, live in a supervised residential environment that provides personal care services. The occupants are capable of responding to an emergency situation without physical assistance from staff. This group shall include, but not be limited to, the following:

Alcohol and drug centers

Assisted living facilities

Congregate care facilities

Convalescent facilities

Group homes

Halfway houses

Residential board and care facilities

Social rehabilitation facilities

A facility such as the above with five or fewer persons shall be classified as a Group R-3 or shall comply with the ~~International~~ *California* Residential Code~~ in accordance with Section 101.2~~. A facility such as above, housing at least six and not more than 16 persons, shall be classified as Group R-4.

308.5 Group I-4, day care facilities. This group shall include buildings and structures occupied by persons of any age who receive custodial care for less than 24 hours by individuals other than parents or guardians, relatives by blood, marriage or adoption, and in a place other than the home of the person cared for. A facility such as the above with ~~five~~ *six* or fewer persons shall be classified as a Group R-3 or shall comply with the ~~*International*~~ *California Residential Code*~~ in accordance with Section 101.2~~. Places of worship during religious functions are not included.

SECTION 310
RESIDENTIAL GROUP R

310.1 Residential Group R. Residential Group R includes, among others, the use of a building or structure, or a portion thereof, for sleeping purposes when not classified as an Institutional Group I or when not regulated by the ~~*International*~~ *California Residential Code* ~~in accordance with Section 101.2~~. Residential occupancies shall include the following:

R-1 Residential occupancies containing sleeping units where the occupants are primarily transient in nature, including:

Boarding houses (transient)
Hotels (transient)
Motels (transient)
[HCD 1] *Efficiency dwelling units (transient)*

Congregate living facilities (transient) with 10 or fewer occupants are permitted to comply with the construction requirements for Group R-3

R-2 Residential occupancies containing sleeping units or more than two dwelling units where the occupants are primarily permanent in nature, including:

Apartment houses
Boarding houses (not transient)
Convents
Dormitories
Fraternities and sororities
Hotels (nontransient)
Live/work units
Monasteries
Motels (nontransient)
Vacation timeshare properties
[HCD 1] *Efficiency dwelling units (nontransient)*

Congregate living facilities with 16 or fewer occupants are permitted to comply with the construction requirements for Group R-3.

R-3 Residential occupancies where the occupants are primarily permanent in nature and not classified as Group R-1, R-2, *R-3.1,* R-4 or I, including:

Buildings ~~*other than townhouses*~~ that do not contain more than two dwelling units.

~~*Townhouses not more than three stories above grade in height with a separate means of egress.*~~

Adult *care* facilities that provide accommodations for ~~five or fewer persons~~ *clients* of any age for less than 24-hours. *Licensing categories that may use this classification include, but are not limited to: Adult Day-care Facilities, Adult Day-support Center.*

Child care facilities that provide accommodations for ~~five or fewer persons~~ *clients* of any age for less than 24-hours. *Licensing categories that may use this classification include, but are not limited to: Family Day-care Homes, Day-care Center for Mildly Ill Children, Infant Care Center and School Age Child Day-care Center.*

Congregate living facilities with 16 or fewer persons.

Adult care and child care facilities that are within a single-family home are permitted to comply with the ~~*International*~~ *California Residential Code*.

R-3.1 [HCD 1] *This occupancy group may include facilities licensed by a governmental agency for a residentially based 24-hour care facility providing accommodations for six or fewer clients of any age. Clients may be classified as ambulatory, nonambulatory or bedridden. A Group R-3.1 occupancy shall meet the requirements for construction as defined for Group R-3, except as otherwise provided for in Section 425, Special Provisions for Licensed 24-Hour Care Facilities in a Group I-1, R-3.1 or R-4 Occupancy.*

R-4 Residential occupancies shall include buildings arranged for occupancy as residential care/assisted living facilities including more than ~~five~~ *six* ~~but not more than 16~~ *ambulatory* ~~occupants~~ *clients*, excluding staff.

Group R-4 occupancies shall meet the requirements for construction as defined for Group R-3, except as otherwise provided for in this code or shall comply with the ~~*International*~~ *California Residential Code* provided the building is protected by an automatic sprinkler system installed in accordance with Section 903.2.8.

NOTE:
Authority Cited: Health and Safety Code Sections 17040, 17050, 17920.9, 17921, 17921.3, 17921.6, 17921.10, 17922, 17922.6, 17922.12, 17927, 17928, 17959.6, 18300, 18552, 18554, 18620, 18630, 18640, 18670, 18690, 18691, 18865, 18871.3, 18871.4, 18873, 18873.1, 18873.2, 18873.3, 18873.4, 18873.5, 18938.3, 18944.11 and 19990; and Government Code Section 12955.1.

Reference: Health and Safety Code Sections 17000 through 17062.5, 17910 through 17995.5, 18200 through 18700, 18860 through 18874, and 19960 through 19997; and Government Code Sections 12955.1 and 12955.1.1.

4. HCD proposes to adopt Chapter 4 with amendments as follows:

CHAPTER 4

SPECIAL DETAILED REQUIREMENTS BASED ON USE AND OCCUPANCY

SECTION 406
MOTOR-VEHICLE-RELATED OCCUPANCIES

406.1.5 Automatic garage door openers. Automatic garage door openers, if provided, shall be listed in accordance with UL 325. *See Health and Safety Code Sections 19890 and 19891 for additional provisions for residential garage door openers.*

406.2.2 Clear height. The clear height of each floor level in vehicle and pedestrian traffic areas shall not be less than 7 feet (2134 mm). ~~Vehicle and pedestrian areas accommodating van-accessible parking required by Section 1106.5 shall conform to ICC A117.1~~ ***[HCD 1-AC]*** *The clear height of vehicle and pedestrian areas required to be accessible shall comply with Chapter 11A or Chapter 11B, as applicable.*

406.4.2 Ventilation. A mechanical ventilation system shall be provided in accordance with the ~~*International*~~ *California Mechanical Code.*

406.6.3 Ventilation.
Repair garages shall be mechanically ventilated in accordance with the ~~*International*~~ *California Mechanical Code*. The ventilation system shall be controlled at the entrance to the garage

406.6.5 Heating equipment.
Heating equipment shall be installed in accordance with the ~~*International*~~ *California Mechanical Code*.

SECTION 409
MOTION PICTURE PROJECTION ROOMS

409.3 Projection room and equipment ventilation. Ventilation shall be provided in accordance with the ~~*International*~~ *California Mechanical Code*.

SECTION 414
HAZARDOUS MATERIALS

414.1.2 Materials. The safe design of hazardous material occupancies is material dependent. Individual material requirements are also found in Sections 307 and 415, and in the ~~*International*~~ *California Mechanical Code* and the *International Fire Code*.

414.3 Ventilation. Rooms, areas or spaces of Group H in which explosive, corrosive, combustible, flammable or highly toxic dusts, mists, fumes, vapors or gases are or may be emitted due to the processing, use, handling or storage of materials shall be mechanically ventilated as required by the *International Fire Code* and the ~~*International*~~ *California Mechanical Code*.

Ducts conveying explosives or flammable vapors, fumes or dusts shall extend directly to the exterior of the building without entering other spaces. Exhaust ducts shall not extend into or through ducts and plenums.

> **Exception:** Ducts conveying vapor or fumes having flammable constituents less than 25 percent of their lower flammable limit (LFL) are permitted to pass through other spaces.

Emissions generated at workstations shall be confined to the area in which they are generated as specified in the *International Fire Code* and the ~~*International*~~ *California Mechanical Code*.

The location of supply and exhaust openings shall be in accordance with the ~~*International*~~ *California Mechanical Code*. Exhaust air contaminated by highly toxic material shall be treated in accordance with the *International Fire Code*.

SECTION 415
GROUPS H-1, H-2, H-3, H-4 AND H-5

415.6.1.4 Explosion control. Explosion control shall be provided as specified in the *International Fire Code*, or spaces shall be equipped with the equivalent mechanical ventilation complying with the ~~*International*~~ *California Mechanical Code*.

415.6.2 Flammable and combustible liquids. The storage, handling, processing and transporting of flammable and combustible liquids in Group H-2 and H-3 occupancies shall be in accordance with Sections 415.6.2.1 through 415.6.2.10, the ~~*International*~~ *California Mechanical Code* and the *International Fire Code.*

415.6.2.8 Room ventilation. Storage tank areas storing Class I, II or IIIA liquids shall be provided with mechanical ventilation. The mechanical ventilation system shall be in accordance with the ~~*International*~~ *California Mechanical Code* and the *International Fire Code*.

415.6.3 Liquefied petroleum gas facilities. The construction and installation of liquefied petroleum gas facilities shall be in accordance with the requirements of this code, the *International Fire Code*, the ~~*International*~~ *California Mechanical Code*, *the California Plumbing Code,* ~~the *International Fuel Gas Code*~~ and NFPA 58.

415.6.4 Dry cleaning plants. The construction and installation of dry cleaning plants shall be in accordance with the requirements of this code, the ~~*International*~~ *California Mechanical Code*, the ~~*International*~~ *California Plumbing Code* and NFPA 32. Dry cleaning solvents and systems shall be classified in accordance with the *International Fire Code*.

415.8.11.1 Exhaust ducts for HPM. An approved automatic sprinkler system shall be provided in exhaust ducts conveying gases, vapors, fumes, mists or dusts generated from HPM in accordance with this section and the ~~*International*~~ *California Mechanical Code*.

SECTION 416
APPLICATION OF FLAMMABLE FINISHES

416.3 Spraying spaces. Spraying spaces shall be ventilated with an exhaust system to prevent the accumulation of flammable mist or vapors in accordance with the ~~*International*~~ *California Mechanical Code*. Where such spaces are not separately enclosed, noncombustible spray curtains shall be provided to restrict the spread of flammable vapors.

FORMER 2006 IBC SECTION 419
GROUP I-1, R-1, R-2, R-3

~~***419.4 Townhouses. [HCD 1]*** *Each townhouse unit shall be considered a separate building and shall comply with the following:*~~

~~1. *Adjacent townhouse units shall each be provided with a 1- hour fire-resistance-rated wall assembly separating the units.*~~
~~2. *Openings are not permitted.*~~
~~3. *Penetrations shall comply with Section 712.*~~

~~*Exception: In lieu of the two 1-hour walls a common 2-hour fire-resistance-rated wall shall be permitted for townhouses if such walls do not contain plumbing or mechanical equipment, ducts or vents in the cavity of the common wall. Electrical installations shall be installed in accordance with the California Electrical Code. Penetrations of electrical outlet boxes shall be in accordance with Section 712.*~~

~~*For purposes of determining accessibility requirements to accommodate persons with disability, dwelling units within a single structure separated by a firewall do not constitute separate structures or buildings and are treated as a single building. For additional information, see Chapter 11A, Section 1102A.1.*~~

~~***419.4.1 Continuity. [HCD 1]*** *The fire-resistance-rated wall or assembly separating townhouses shall be continuous from the foundation to the underside of the roof sheathing, deck or slab. The fire-resistance rating shall extend the full length of the wall or assembly, including wall extensions through and separating attached enclosed accessory structures.*~~

~~***419.4.2 Parapets. [HCD 1]*** *Parapets constructed in accordance with Section 419.4.3 shall be constructed for townhouses as an extension of exterior walls or common walls in accordance with the following:*~~

~~1. *Where roof surfaces adjacent to the wall or walls are at the same elevation, the parapet shall extend not less than 30 inches (762 mm) above the roof surfaces.*~~
~~2. *Where roof surfaces adjacent to the wall or walls are at different elevations and the higher roof is not more than 30 inches (762 mm) above the lower roof, the parapet shall extend not less than 30 inches (762 mm) above the lower roof surface.*~~

~~***Exception:*** *A parapet is not required in the two cases above when the roof is covered with a minimum class C roof covering, and the roof decking or sheathing is of noncombustible materials or approved fire-retardant-treated wood for a distance of 4 feet (1219 mm) on each side of the wall or walls, or one layer of 5/8-inch (15.9 mm) Type X gypsum board is installed directly beneath the roof decking or sheathing, supported by a minimum of nominal 2-inch (51 mm) ledgers attached to the sides of the roof framing members, for a minimum distance of 4 feet (1220 mm) on each side of the wall or walls.*~~

~~3. *A parapet is not required where roof surfaces adjacent to the wall or walls are at different elevations and the higher roof is more than 30 inches (762 mm) above the lower roof. The common wall construction from the lower roof to the underside of the higher roof deck shall have not less than a 1-hour fire-resistance rating. The wall shall be rated for exposure from both sides.*~~

~~***419.4.3 Parapet Construction. [HCD 1]*** *Parapets shall have the same fire-resistance rating as that required for the supporting wall or walls. On any side adjacent to a roof surface, the parapet shall have noncombustible faces for the uppermost 18 inches (457 mm), to include counterflashing and coping materials. Where the roof slopes toward a parapet at slopes greater than two units vertical in 12 units horizontal (16.7 percent slope), the parapet shall extend to the same height as any portion of the roof within a distance of 3 feet (914 mm), but in no case shall the height be less than 30 inches (762 mm).*~~

~~***419.4.4 Structural Independence. [HCD 1]*** *Each individual townhouse shall be structurally independent.*~~

~~***Exceptions:***~~
~~1. *Foundations supporting exterior walls or common walls.*~~
~~2. *Structural roof and wall sheathing from each unit may fasten to the common wall framing.*~~
~~3. *Nonstructural wall coverings.*~~
~~4. *Flashing at termination of roof covering over common wall.*~~
~~5. *Townhouses separated by a common 2-hour fire-resistance-rated wall as provided in Section 419.4.*~~

SECTION 419
LIVE/WORK UNITS

419.7 Accessibility. Accessibility shall be designed in accordance with Chapter*s* 11*A and/or 11B, when applicable.*

419.8 Ventilation. The applicable requirements of the ~~*International*~~ *California Mechanical Code* shall apply to each area within the live/work unit for the function within that space.

SECTION 420
GROUPS I-1, R-1, R-2, R-3

420.4 Carbon monoxide alarms. [HCD 1, HCD 2 & HCD 1-AC]

420.4.1 Carbon monoxide alarms. *For new construction, an approved carbon monoxide alarm shall be installed in dwelling units and in sleeping units within which fuel-burning appliances are installed; and in dwelling units that have attached garages.*

420.4.1.1 Power supply. *For new construction, required carbon monoxide alarms shall receive their primary power from the building wiring where such wiring is served from a commercial source and shall be equipped with a battery back-up. Alarm wiring shall be directly connected to the permanent building wiring without a disconnecting switch other than as required for overcurrent protection.*

Exceptions:

1. In dwelling units where there is no commercial power supply, the carbon monoxide alarm may be solely battery operated.

2. In existing dwelling units, a carbon monoxide alarm is permitted to be solely battery operated where repairs or alterations do not result in the removal of wall and ceiling finishes or there is no access by means of attic, basement or crawl space.

3. Other power sources recognized for use by NFPA 720.

420.4.1.2 Interconnection. *Where more than one carbon monoxide alarm is required to be installed within the dwelling unit or within a sleeping unit, the alarm shall be interconnected in a manner that activation of one alarm shall activate all of the alarms in the individual unit.*

Exception:

1. Interconnection is not required in existing dwelling units or within sleeping units where repairs do not result in the removal of wall and ceiling finishes, there is no access by means of attic, basement or crawl space, and no previous method for interconnection existed.

420.4.2 Where required in existing dwellings or sleeping units. *Where work requiring a permit occurs in existing dwellings that have attached garages, or in existing dwellings or sleeping units within which fuel-burning appliances exist, carbon monoxide alarms shall be provided in accordance with Section 420.4.1. Carbon monoxide alarms shall only be required in the specific dwelling unit or sleeping unit for which the permit was obtained.*

420.4.3 Alarm requirements. *Single- and multiple-station carbon monoxide alarms shall be listed as complying with the requirements of UL 2034 for equipment performance, and installed in accordance with this code, the current edition of NFPA 720 for "Single- and Multiple-Station Alarms and Household Carbon Monoxide Detection Systems," and the manufacturer's installation instructions. Other carbon monoxide alarm and detection devices as recognized in NFPA 720 are also acceptable.*

Carbon monoxide alarms required by Sections 420.4.1 and 420.4.2 shall be installed in the following locations:

1. Outside of each separate dwelling unit sleeping area in the immediate vicinity of the bedroom(s).

2. On every level of a dwelling unit including basements.

3. For R-1 only.

a. On the ceiling of sleeping units with permanently installed fuel-burning appliances.

420.4.3.1 Multi-purpose alarms. *When a carbon monoxide alarm is combined with a smoke alarm, in addition to the requirements of Section 420.4, all applicable standards described in Chapter 9 for smoke alarms shall apply.*

420.4.4 Visible alarms. *In buildings meeting the definition of "COVERED MULTIFAMILY DWELLINGS" in accordance with Chapter 11A and with fuel-burning appliances and/or attached garages as described in Section 420.4.1, all required carbon monoxide alarms shall be provided with the capability to support visible alarm notification appliances in accordance with NFPA 720 and Chapter 11B.*

SECTION 424
SPECIAL PROVISIONS FOR RESIDENTIAL HOTELS [HCD 1 & HCD 1-AC)

424.1 Locking mail receptacles. *A locking mail receptacle for each residential unit shall be provided in all residential hotels pursuant to the requirements specified in Heath and Safety Code Section 17958.3.*

NOTE:
Authority Cited: Health and Safety Code Sections 17040, 17050, 17920.9, 17921, 17921.3, 17921.6, 17921.10, 17922, 17922.6, 17922.12, 17927, 17928, 17959.6, 18300, 18552, 18554, 18620, 18630, 18640, 18670, 18690, 18691, 18865, 18871.3, 18871.4, 18873, 18873.1, 18873.2, 18873.3, 18873.4, 18873.5, 18938.3, 18944.11 and 19990; and Government Code Section 12955.1.

Reference: Health and Safety Code Sections 17000 through 17062.5, 17910 through 17995.5, 18200 through 18700, 18860 through 18874, and 19960 through 19997; and Government Code Sections 12955.1 and 12955.1.1.

---

5. HCD proposes to adopt Chapter 5 with prior amendments brought forward.

CHAPTER 5

GENERAL BUILDING HEIGHTS AND AREAS

NOTE:
Authority Cited: Health and Safety Code Sections 17040, 17050, 17920.9, 17921, 17921.3, 17921.6, 17921.10, 17922, 17922.6, 17922.12, 17927, 17928, 17959.6, 18300, 18552, 18554, 18620, 18630, 18640, 18670, 18690, 18691, 18865, 18871.3, 18871.4, 18873, 18873.1, 18873.2, 18873.3, 18873.4, 18873.5, 18938.3, 18944.11, and 19990; and Government Code Section 12955.1.

Reference: Health and Safety Code Sections 17000 through 17062.5, 17910 through 17995.5, 18200 through 18700, 18860 through 18874, and 19960 through 19997; and Government Code Sections 12955.1 and 12955.1.1.

---

6. HCD proposes to adopt Chapter 6 with amendments as follows:

CHAPTER 6

TYPES OF CONSTRUCTION

SECTION 602
CONSTRUCTION CLASSIFICATION

TABLE 602
FIRE RESISTANCE RATING REQUIREMENTS FOR EXTERIOR WALLS BASED ON FIRE SEPARATION DISTANCE[a, e]

FIRE SEPARATION DISTANCE = X (feet)	TYPE OF CONSTRUCTION	OCCUPANCY GROUP H[f]	OCCUPANCY GROUP F-1, M, S-1[g]	OCCUPANCY GROUP A, B, E, F-2, I, R[~~f~~ h], S-2[g], U[b ~~f~~ h]
X < 5[c]	All	3	2	1
5 ≤ X < 10	IA Others	3 2	2 1	1 1
10 ≤ X < 30	IA, IB IIB, VB Others	2 1 1	1 0 1	1[d] 0 1[d]
X ≥ 30	All	0	0	0

For SI: 1 foot = 304.8 mm.

a. Load-bearing exterior walls shall also comply with the fire-resistance rating requirements of Table 601.
b. For special requirements for Group U occupancies, see Section 406.1.2
c. See Section 706.1.1 for party walls.
d. Open parking garages complying with Section 406 shall not be required to have a fire-resistance rating.
e. The fire-resistance rating of an exterior wall is determined based upon the fire separation distance of the exterior wall and the story in which the wall is located.
f. For special requirements for Group H occupancies, see Section 415.3.
g. For special requirements for Group S aircraft hangers, see Section 412.4.1.

~~f.~~ h. Group R-3 and Group U, when used as accessory to Group R-3, shall not be required to have a fire-resistance rating where the fire separation distance is ~~5~~ 3 feet or more.

SECTION 603
COMBUSTIBLE MATERIAL IN TYPE I AND II CONSTRUCTION

603.1 Allowable materials. Combustible materials shall be permitted in buildings of Type I or Type II construction in the following applications and in accordance with Sections 603.1.1 through 603.1.3:

1. Thermal and acoustical insulation, other than foam plastics, having a flame spread index of not more than 25.

. . .

17. Nailing or furring strips as permitted by Section ~~803.4~~ *803.11*.

. . .

24. Materials exposed within plenums complying with Section 602 of the ~~*International*~~ *California Mechanical Code.*

. . .

603.1.1 Ducts. The use of nonmetallic ducts shall be permitted when installed in accordance with the limitations of the ~~*International*~~ *California Mechanical Code*.

603.1.2 Piping. The use of combustible piping materials shall be permitted when installed in accordance with the limitations of the ~~*International*~~ *California Mechanical Code* and the ~~*International*~~ *California Plumbing Code*.

603.1.3 Electrical. The use of electrical wiring methods with combustible insulation, tubing, raceways and related components shall be permitted when installed in accordance with the limitations of ~~this code~~ the *California Electrical Code*.

NOTE:
Authority Cited: Health and Safety Code Sections 17040, 17050, 17920.9, 17921, 17921.3, 17921.6, 17921.10, 17922, 17922.6, 17922.12, 17927, 17928, 17959.6, 18300, 18552, 18554, 18620, 18630, 18640, 18670, 18690, 18691, 18865, 18871.3, 18871.4, 18873, 18873.1, 18873.2, 18873.3, 18873.4, 18873.5, 18938.3, 18944.11, and 19990; and Government Code Section 12955.1.

Reference: Health and Safety Code Sections 17000 through 17062.5, 17910 through 17995.5, 18200 through 18700, 18860 through 18874, and 19960 through 19997; and Government Code Sections 12955.1 and 12955.1.1.

7. HCD proposes to adopt Chapter 7 with amendments as follows:

CHAPTER 7

FIRE AND SMOKE PROTECTION FEATURES

SECTION 708
SHAFT ENCLOSURES

708.2 Shaft enclosure required. Openings through a floor/ceiling assembly shall be protected by a shaft enclosure complying with this section.

Exceptions:

1. A shaft enclosure is not required for openings totally within an individual residential dwelling unit and connecting four stories or less.

. . .

4. A shaft enclosure is not required for penetrations by ducts protected in accordance with Section 716.6. Grease ducts shall be protected in accordance with the ~~International~~ *California Mechanical Code.*

. . .

SECTION 709
FIRE PARTITIONS

709.4 Continuity. Fire partitions shall extend from the top of the foundation or floor/ceiling assembly below to the underside of the floor or roof sheathing, slab or deck above or to the fire-resistance-rated floor/ceiling or roof/ceiling assembly above, and shall be securely attached thereto. If the partitions are not continuous to the sheathing, deck or slab, and where constructed of combustible construction, the space between the ceiling and the sheathing, deck or slab above shall be fireblocked or draftstopped in accordance with Sections 717.2 and 717.3 at the partition line. The supporting construction shall be protected to afford the required fire-resistance rating of the wall supported, except for walls separating tenant spaces in covered mall buildings, walls separating dwelling units, walls separating sleeping units and corridor walls in buildings of Types IIB, IIIB and VB construction.

Exceptions:

1. The wall need not be extended into the crawl space below where the floor above the crawl space has a minimum 1-hour fire-resistance rating.

. . .

~~*7. **[HCD 1]** Wall assemblies in two-family dwellings need not extend through attic spaces when the ceiling is protected by not less than $^5/_8$-inch (15.9 mm). Type X gypsum board, and an attic draftstop constructed as specified in Section 717.3.1 is provided above and along the wall assembly separating the dwellings. The structural framing supporting the ceiling shall also be protected by not less than $^1/_2$-inch (12.7 mm) gypsum board or equivalent.*~~

709.8 Joints. Joints made in or between fire partitions shall comply with Section 714.

~~***Exception: [HCD 1]** Fire-resistance-rated wall assemblies in two-family dwellings which extend to and are tight against the exterior wall, the ceiling as permitted in Section 708.4 or the underside of the roof sheathing.*~~

SECTION 716
DUCTS AND AIR TRANSFER OPENINGS

716.2.2 Hazardous exhaust ducts. Fire dampers for hazardous exhaust duct systems shall comply with the ~~*International*~~ *California Mechanical Code.*

716.5.3 Shaft enclosures. Shaft enclosures that are permitted to be penetrated by ducts and air transfer openings shall be protected with approved fire and smoke dampers installed in accordance with their listing.

Exceptions:

1. Fire dampers are not required at penetrations of shafts where:

. . .

5. Fire dampers and combination fire/smoke dampers are not required in kitchen and clothes dryer exhaust systems when installed in accordance with the ~~*International*~~ *California Mechanical Code*.

716.5.4 Fire partitions. Ducts and air transfer openings that penetrate fire partitions shall be protected with listed fire dampers installed in accordance with their listing.

Exceptions: In occupancies other than Group H, fire dampers are not required where any of the following apply:

1. Corridor walls in buildings equipped throughout with an automatic sprinkler system in accordance with Section 903.3.1.1 or 903.3.1.2 and the duct is protected as a through penetration in accordance with Section 713.

. . .

3. The duct system is constructed of approved materials in accordance with the ~~*International*~~ *California Mechanical Code* and the duct penetrating the wall complies with all of the following requirements:

. . .

716.6.1 Through penetrations. In occupancies other than Groups I-2 and I-3, a duct constructed of approved materials in accordance with the ~~*International*~~ *California Mechanical Code* that penetrates a fire-resistance-rated floor/ceiling assembly that connects not more than two stories is permitted without shaft enclosure protection, provided a listed fire damper is installed at the floor line or the duct is protected in accordance with Section 713.4. For air transfer openings, see Exception 7 to Section 708.2.

. . .

716.6.2 Membrane penetrations. Ducts and air transfer openings constructed of approved materials in accordance with the ~~*International*~~ *California Mechanical Code* that penetrate the ceiling membrane of a fire-resistance-rated floor/ceiling or roof/ceiling assembly shall be protected with one of the following:

. . .

716.6.3 Nonfire-resistance-rated floor assemblies. Duct systems constructed of approved materials in accordance with the ~~*International*~~ *California Mechanical Code* that penetrate nonfire-resistance-rated floor assemblies shall be protected by any of the following methods:

. . .

SECTION 717
CONCEALED SPACES

717.5 Combustible materials in concealed spaces in Type I or II construction. Combustible materials shall not be permitted in concealed spaces of buildings of Type I or II construction.

Exceptions:

1. Combustible materials in accordance with Section 603.

2. Combustible materials exposed within plenums complying with Section 602 of the ~~*International*~~ *California Mechanical Code*.

. . .

5. Combustible piping within concealed ceiling spaces installed in accordance with the ~~*International*~~ *California Mechanical Code* and the ~~*International*~~ *California Plumbing Code*.

. . .

SECTION 719
THERMAL- AND SOUND-INSULATING MATERIALS

719.1 General. Insulating materials, including facings such as vapor retarders and vapor-permeable membranes, similar coverings and all layers of single and multilayer reflective foil insulations, shall comply with the requirements of this section. Where a flame spread index or a smoke-developed index is specified in this section, such index shall be determined in accordance with ASTM E 84 or UL 723. Any material that is subject to an increase in flame spread index or smoke-developed index beyond the limits herein established through the effects of age, moisture or other atmospheric conditions shall not be permitted.

Exceptions:

1. Fiberboard insulation shall comply with Chapter 23.

. . .

3. Duct and pipe insulation and duct and pipe coverings and linings in plenums shall comply with the ~~*International*~~ *California Mechanical Code*.

. . .

719.7 Insulation and covering on pipe and tubing. Insulation and covering on pipe and tubing shall have a flame spread index of not more than 25 and a smoke-developed index of not more than 450.

Exception: Insulation and covering on pipe and tubing installed in plenums shall comply with the ~~*International*~~ *California Mechanical Code.*

SECTION 720
PRESCRIPTIVE FIRE RESISTANCE

720.2 Cellular concrete. [HCD 1 & HCD 2]

720.2.1 Use and application [HCD 1 & HCD 2] *Controlled-density cellular concrete, when used or applied, shall be in accordance with the use of materials in Bulletin No. 65 of the Federal Housing Administration, United States Department of Housing and Urban Development.*

Exceptions:

1. *Regardless of the provisions of Subsections 3.2, 3.3, 3.4 and 3.6 in Section 3, Bulletin No. 65 provisions relating to proportioning, mixing and testing, in the following shall apply to this chapter.*

   . . .

   1.3 The minimum air-dry density shall be 90 pounds per cubic foot (1,440 kg/m³). The minimum design compressive strength shall be 1,000 psi (6,890 kPa) when the curing procedure specified herein is applied. The minimum design compressive strength shall be 1,250 psi (8,619 kPa) if the slab is placed in a covered area of a building and a specified curing medium is not applied. The specified design compressive strength shall be increased 20 percent when the specified strength is greater than 1,000 psi (6,890 kPa) and the slab is placed in a covered area of a building and a specified curing medium is not applied.

   . . .

NOTE:
Authority Cited: Health and Safety Code Sections 17040, 17050, 17920.9, 17921, 17921.3, 17921.6, 17921.10, 17922, 17922.6, 17922.12, 17927, 17928, 17959.6, 18300, 18552, 18554, 18620, 18630, 18640, 18670, 18690, 18691, 18865, 18871.3, 18871.4, 18873, 18873.1, 18873.2, 18873.3, 18873.4, 18873.5, 18938.3, 18944.11 and 19990; and Government Code Section 12955.1.

Reference: Health and Safety Code Sections 17000 through 17062.5, 17910 through 17995.5, 18200 through 18700, 18860 through 18874, and 19960 through 19997; and Government Code Sections 12955.1 and 12955.1.1.

7-A. HCD proposes to bring forward Chapter 7A from the 2007 California Building Code without amendment:

CHAPTER 7A

MATERIALS AND CONSTRUCTION METHODS FOR EXTERIOR WILDFIRE EXPOSURE

NOTE:
Authority Cited: Health and Safety Code Sections 17040, 17050, 17920.9, 17921, 17921.3, 17921.6, 17921.10, 17922, 17922.6, 17922.12, 17927, 17928, 17959.6, 18300, 18552, 18554, 18620, 18630, 18640, 18670, 18690, 18691, 18865, 18871.3, 18871.4, 18873, 18873.1, 18873.2, 18873.3, 18873.4, 18873.5, 18938.3, 18944.11 and 19990; and Government Code Section 12955.1.

Reference: Health and Safety Code Sections 17000 through 17062.5, 17910 through 17995.5, 18200 through 18700, 18860 through 18874, and 19960 through 19997; and Government Code Sections 12955.1 and 12955.1.1.

8. HCD proposes to adopt Chapter 8 without amendment:

CHAPTER 8

INTERIOR FINISHES

NOTE:
Authority Cited: Health and Safety Code Sections 17040, 17050, 17920.9, 17921, 17921.3, 17921.6, 17921.10, 17922, 17922.6, 17922.12, 17927, 17928, 17959.6, 18300, 18552, 18554, 18620, 18630, 18640, 18670, 18690, 18691, 18865, 18871.3, 18871.4, 18873, 18873.1, 18873.2, 18873.3, 18873.4, 18873.5, 18938.3, 18944.11 and 19990; and Government Code Section 12955.1.

Reference: Health and Safety Code Sections 17000 through 17062.5, 17910 through 17995.5, 18200 through 18700, 18860 through 18874, and 19960 through 19997; and Government Code Sections 12955.1 and 12955.1.1.

9. HCD proposes to adopt Chapter 9 with amendments as follows:

CHAPTER 9

FIRE PROTECTION SYSTEMS

SECTION 903
AUTOMATIC SPRINKLER SYSTEMS

903.2.8 Group R. An automatic sprinkler system installed in accordance with Section 903.3 shall be provided throughout all buildings with a Group R fire area.

~~***Exceptions:***~~

~~*1. Detached one- and two-family dwellings and multiple single-family dwellings (townhouses) not more than three stories above grade plane in height with a separate means of egress, unless specifically required by other sections of this code, or classified as Group R-4.*~~

~~*2. Group U private garages accessory to a Group R-3 occupancy.*~~

903.2.11.4 Ducts conveying hazardous exhausts. Where required by the ~~*International*~~ *California Mechanical Code*, automatic sprinklers shall be provided in ducts conveying hazardous exhaust, or flammable or combustible materials.

Exception: Ducts in which the largest cross-sectional diameter of the duct is less than 10 inches (254 mm).

903.3.5 Water supplies. Water supplies for automatic sprinkler systems shall comply with this section and the standards referenced in Section 903.3.1. The potable water supply shall be protected against backflow in accordance with the requirements of this section and the ~~*International*~~ *California Plumbing Code*.

SECTION 904
ALTERNATIVE AUTOMATIC FIRE-EXTINGUISHING SYSTEMS

904.2.1 Commercial hood and duct systems. Each required commercial kitchen exhaust hood and duct system required by Section 609 of the *International Fire Code* or ~~Chapter 5 of~~ the ~~*International*~~ *California Mechanical Code* to have a Type I hood shall be protected with an approved automatic fire-extinguishing system installed in accordance with this code.

904.11 Commercial cooking systems. The automatic fire-extinguishing system for commercial cooking systems shall be of a type recognized for protection of commercial cooking equipment and exhaust systems of the type and arrangement protected. Preengineered automatic dry- and wet-chemical extinguishing systems shall be tested in accordance with UL 300 and listed and labeled for the intended application. Other types of automatic fire-extinguishing systems shall be listed and labeled for specific use as protection for commercial cooking operations. The system shall be installed in accordance with this code, its listing and the manufacturer's installation instructions. Automatic fire-extinguishing systems of the following types shall be installed in accordance with the referenced standard indicated, as follows:

1. Carbon dioxide extinguishing systems, NFPA 12.

. . .

5. Wet-chemical extinguishing systems, NFPA 17A.

Exception: Factory-built commercial cooking recirculating systems that are tested in accordance with UL 710B and listed, labeled and installed in accordance with ~~Section 304.1~~ *Chapter 3* of the ~~*International*~~ *California Mechanical Code*.

SECTION 908
EMERGENCY ALARM SYSTEMS

908.6 Refrigerant detector. Machinery rooms shall contain a refrigerant detector with an audible and visual alarm. The detector, or a sampling tube that draws air to the detector, shall be located in an area where refrigerant from a leak will concentrate. The alarm shall be actuated at a value not greater than the corresponding TLV-TWA values for the refrigerant classification indicated in the ~~*International*~~ *California Mechanical Code*. Detectors and alarms shall be placed in approved locations.

SECTION 909
SMOKE CONTROL SYSTEMS

909.1 Scope and purpose. This section applies to mechanical or passive smoke control systems when they are required by other provisions of this code. The purpose of this section is to establish minimum requirements for the design, installation and acceptance testing of smoke control systems that are intended to provide a tenable environment for the evacuation or relocation of occupants. These provisions are not intended for the preservation of contents, the timely restoration of operations or for assistance in fire suppression or overhaul activities. Smoke control systems regulated by this section serve a different purpose than the smoke- and heat-venting provisions found in Section 910. Mechanical smoke control systems shall not be considered exhaust systems under Chapter 5 of the ~~*International*~~ *California Mechanical Code*.

909.10.2 Ducts. Duct materials and joints shall be capable of withstanding the probable temperatures and pressures to which they are exposed as determined in accordance with Section 909.10.1. Ducts shall be constructed and supported in accordance with the ~~*International*~~ *California Mechanical Code*. Ducts shall be leak tested to 1.5 times the maximum design pressure in accordance with nationally accepted practices. Measured

leakage shall not exceed 5 percent of design flow. Results of such testing shall be a part of the documentation procedure. Ducts shall be supported directly from fire-resistance-rated structural elements of the building by substantial, noncombustible supports.

Exception: Flexible connections (for the purpose of vibration isolation) complying with the ~~*International*~~ *California Mechanical Code*, that are constructed of approved fire-resistance-rated materials.

SECTION 912
FIRE DEPARTMENT CONNECTIONS

912.5 Backflow protection. The potable water supply to automatic sprinkler and standpipe systems shall be protected against backflow as required by the ~~*International*~~ *California Plumbing Code*.

NOTE:
Authority Cited: Health and Safety Code Sections 17040, 17050, 17920.9, 17921, 17921.3, 17921.6, 17921.10, 17922, 17922.6, 17922.12, 17927, 17928, 17959.6, 18300, 18552, 18554, 18620, 18630, 18640, 18670, 18690, 18691, 18865, 18871.3, 18871.4, 18873, 18873.1, 18873.2, 18873.3, 18873.4, 18873.5, 18938.3, 18944.11 and 19990; and Government Code Section 12955.1.

Reference: Health and Safety Code Sections 17000 through 17062.5, 17910 through 17995.5, 18200 through 18700, 18860 through 18874, and 19960 through 19997; and Government Code Sections 12955.1 and 12955.1.1.

---

10. HCD proposes to adopt Chapter 10 with amendments as follows:

CHAPTER 10

MEANS OF EGRESS

SECTION 1002
DEFINITIONS

GUARD *([HCD 1 & HCD 2] or GUARDRAIL).* A building component or a system of building components located at or near the open sides of elevated walking surfaces that minimizes the possibility of a fall from the walking surface to a lower level.

SECTION 1003
GENERAL MEANS OF EGRESS

1003.1 Applicability. The general requirements specified in Sections 1003 through 1013 shall apply to all three elements of the means of egress system, in addition to those specific requirements for the exit access, the exit and the exit discharge detailed elsewhere in this chapter.

[HCD 1-AC] *In addition to the requirements of this chapter, means of egress, which provide access to, or egress from, buildings or facilities where accessibility is required for applications listed in Section ~~108.2.1.2~~ 1.8.2.1.2 regulated by the Department of Housing and Community Development, or Section ~~109.1~~ 1.9.1 regulated by the Division of the State Architect--Access Compliance, shall also comply with Chapter 11A or Chapter 11B, as applicable.*

1003.2 Ceiling height. The means of egress shall have a ceiling height of not less than 7 feet 6 inches (2286 mm).

Exceptions:

1. Sloped ceilings in accordance with Section 1208.2.

. . .

7. The clear height of floor levels in vehicular and pedestrian traffic areas in parking garages in accordance with Section 406.2.2. ***[HCD 1-AC]*** *The clear height of vehicle and pedestrian areas*

required to be accessible, or identified as accessible, shall comply with Chapter 11A or Chapter 11B, as applicable.

. . .

1003.3.4 Clear width. Protruding objects shall not reduce the minimum clear width of accessible routes *as required* in *Chapter 11A or Chapter 11B, Section 1133B.8.6.*

1003.5 Elevation Change. Where changes in elevation of less than 12 inches (305 mm) exist in the means of egress, sloped surfaces shall be used. Where the slope is greater than one unit vertical in 20 units horizontal (5-percent slope), ramps complying with Section 1010 shall be used. Where the difference in elevation is 6 inches (152 mm) or less, the ramp shall be equipped with either handrails or floor finish materials that contrast with adjacent floor finish materials.

Exceptions:

1. A single step with a maximum riser height of 7 inches (178 mm) is permitted for buildings with occupancies in Groups F, H, R-2, R-3, S and U at exterior doors not required to be accessible by ~~Chapter 11~~ *Chapter 11A or 11B*.

2. A stair with a single riser or with two risers and a tread is permitted at locations not required to be accessible by ~~Chapter 11~~ *Chapter 11A or 11B*, provided that the risers and treads comply with Section 1009.4, the minimum depth of the tread is 13 inches (330 mm) and at least one handrail complying with Section 1012 is provided within 30 inches (762 mm) of the centerline of the normal path of egress travel on the stair.
3. A step is permitted in aisles serving seating that has a difference in elevation less than 12 inches (305 mm) is permitted at locations not required to be accessible by ~~Chapter 11~~ *Chapter 11A or 11B*, provided that the risers and treads comply with Section 1028.11 and the aisle is provided with a handrail complying with Section 1028.13.

Throughout a story in a Group I-2 occupancy, any change in elevation in portions of the exit access that serve nonambulatory persons shall be by means of a ramp or sloped walkway.

SECTION 1007
ACCESSIBLE MEANS OF EGRESS

1007.1 Accessible means of egress required. Accessible means of egress shall comply with this section. Accessible spaces shall be provided with not less than one accessible means of egress. Where more than one means of egress is required by Section 1015.1 or 1021.1 from any accessible space, each accessible portion of the space shall be served by ~~not less than two~~ accessible means of egress *in at least the same number as required by Section 1015.1 or ~~1019.1~~ 1021.1. In addition to the requirements of this chapter, means of egress, which provide access to, or egress from, buildings for persons with disabilities, shall also comply with the requirements of Chapter 11A or 11B, as applicable.*

Exceptions:

1. Accessible means of egress are not required in alterations to existing buildings.

. . .

1007.2 Continuity and components. Each required accessible means of egress shall be continuous to a public way and shall consist of one or more of the following components:

1. Accessible routes complying with ~~Section 1104~~ *Chapter 11A, Sections 1110A.1 and 1120A, or Chapter 11B, Section 1114B.1.2, as applicable*.

2. Interior exit stairways complying with Sections 1007.3, ~~and~~ 1026 *and Chapter~~s~~ 11A, Section 1123A, or Chapter 11B, Section 1133B.4, as applicable.*

3. Exterior exit stairways complying with Sections 1007.3, ~~and~~ 1026 *and Chapter 11A, Section 1115A, or Chapter 11B, Section 1133B.4, as applicable*.

. . .

1007.5 Platform lifts. Platform (wheelchair) lifts shall not serve as part of an accessible means of egress, except where allowed as part of a required accessible route in ~~Section 1109.7, Items 1 through 9~~ *Chapter 11A, Sections 1121A and 1124A.11; or Chapter 11B, Sections 1116B.2.1 through 1116B.2.4, as applicable.* Standby power shall be provided in accordance with Chapter 27 for platform lifts permitted to serve as part of a means of egress.

1007.6.1 Size. Each area of refuge shall be sized to accommodate ~~one~~ *two* wheelchair space*s that are not less than* ~~of~~ 30 inches by 48 inches (762 mm by 1219 mm) *each. The total number of such 30-inch by 48-inch (762 mm by 1219 mm) spaces per story shall be not less than one for every 200 persons of calculated occupant load served by the area of refuge.* ~~for each 200 occupants or portion thereof, based on occupant load of the area of refuge and areas served by the area of refuge.~~ Such wheelchair spaces shall not reduce the required means egress width. Access to any of the required wheelchair spaces in an area of refuge shall not be obstructed by more than one adjoining wheelchair space.

> ***Exception:*** *The enforcing agency may reduce the size of the each required area of refuge to accommodate one wheelchair space that is not less than 30 inches by 48 inches (762 mm by 1219 mm) on floors where the occupant load is less than 200.*

1007.6.3.1 Visible communication method. [HCD 1-AC] *A button complying with Section 1117B.6 in the area of refuge shall activate both a light in the area of refuge indicating that rescue has been requested and a light at the central control point indicating that rescue is being requested. A button at the central control point shall activate both a light at the central control point and a light in the area of refuge indicating that the request has been received.*

1007.9 Signage. Signage indicating special accessibility provisions shall be provided as shown:

1. Each door providing access to an area of refuge from an adjacent floor area shall be identified by a sign stating: AREA OF REFUGE.

2. Each door providing access to an exterior area for assisted rescue shall be identified by a sign stating: EXTERIOR AREA FOR ASSISTED RESCUE.

Signage shall comply with the ~~ICC A117.1~~ *Section 1117B.5.1, Item 1,* requirements for visual characters and include the International Symbol of Accessibility *complying with Section 1117B.5.8.1*. Where exit sign illumination is required by Section 1011.2, the signs shall be illuminated. Additionally, tactile signage complying with ~~ICC A117.1~~ *Section 1117B.5.1, Item 1, and the International Symbol of Accessibility* shall be located at each door to an area of refuge and exterior area for assisted rescue in accordance with Section 1011.3.

~~1007.9~~ 1007.12 Alarms/emergency warning systems/accessibility. *If emergency warning systems are required, they shall activate a means of warning the hearing impaired. Emergency warning systems as part of the fire-alarm system shall be designed and installed in accordance with NFPA 72 as amended in Chapter 35.*

SECTION 1008
DOORS, GATES AND TURNSTILES

1008.1.1 Size of Doors. The minimum width of each door opening shall be sufficient for the occupant load thereof and shall provide a clear width of 32 inches (813 mm). Clear openings of doorways with swinging doors shall be measured between the face of the door and the stop, with the door open 90 degrees (1.57 rad). Where this section requires a minimum clear width of 32 inches (813 mm) and a door opening includes two door leaves without a mullion, one leaf shall provide a clear opening width of 32 inches (813 mm). The maximum width of a swinging door leaf shall be 48 inches (1219 mm) nominal. Means of egress doors in a Group I-2 occupancy used for the movement of beds shall provide a clear width not less than 41 1/2 inches (1054 mm). The height of doors shall not be less than 80 inches (2032 mm).

Exceptions:

1. The minimum and maximum width shall not apply to door openings that are not part of the required means of egress in Group R-2 and R-3 occupancies.

. . .

7. In other than Group R-1 occupancies, the minimum widths shall not apply to interior egress doors within a dwelling unit or sleeping unit that is not required to be ~~an Accessible unit, Type A unit or Type B unit~~ *adaptable or accessible as specified in Chapter 11A or 11B, as applicable*.

8. Door openings required to be accessible within dwelling units shall have a minimum clear width *as specified in Chapter 11A or 11B, as applicable*.

1008.1.4.1 Revolving doors. Revolving doors shall comply with the following:

1. Each revolving door shall be capable of collapsing into a bookfold position with parallel egress paths providing an aggregate width of 36 inches (914 mm).

. . .

5. Revolving doors shall not be part of an accessible route required by Section 1007*,* ~~and~~ Chapter *11A or Chapter 11B*.

1008.1.5 Floor elevation. There shall be a floor or landing on each side of a door. Such floor or landing shall be at the same elevation on each side of the door. Landings shall be level except for exterior landings, which are permitted to have a slope not to exceed 0.25 unit vertical in 12 units horizontal (2-percent slope).

Exceptions:

1. Doors serving individual dwelling units in Groups R-2 and R-3 where the following apply:

. . .

3. In Group R-3 occupancies not required to be ~~Accessible units, Type A units or Type B units~~ *adaptable or accessible,* the landing at an exterior doorway shall not be more than 7-3/4 inches (197 mm) below the top of the threshold, provided the door, other than an exterior storm or screen door, does not swing over the landing.

. . .

~~5. Exterior decks, patios or balconies that are part of Type B dwelling units, have impervious surfaces and that are not more than 4 inches (102 mm) below the finished floor level of the adjacent interior space of the dwelling unit.~~

1008.1.7 Thresholds. Thresholds at doorways shall not exceed 3/4 inch (19.1 mm) in height for sliding doors serving dwelling units or 1/2 inch (12.7 mm) for other doors. Raised thresholds and floor level changes greater than 1/4 inch (6.4 mm) at doorways shall be beveled with a slope not greater than one unit vertical in two units horizontal (50-percent slope).

Exception: The threshold height shall be limited to 7-3/4 inches (197 mm) where the occupancy is Group R-2 or R-3; the door is an exterior door that is not a component of the required means of egress; the door, other than an exterior storm or screen door*,* does not swing over the landing or step; and the doorway is not on an accessible route as required by Chapter 11*A or 11B* and is not part of an ~~Accessible unit, Type A unit or Type B unit~~ *adaptable or accessible dwelling unit*.

1008.1.8 Door arrangement. Space between two doors in a series shall be 48 inches (1219 mm) minimum plus the width of a door swinging into the space. Doors in a series shall swing either in the same direction or away from the space between doors.

Exceptions:

1. The minimum distance between horizontal sliding power-operated doors in a series shall be 48 inches (1219 mm).

. . .

3. Doors within individual dwelling units in Groups R-2 and R-3 *occupancies* other than ~~within Type A dwelling units~~ *adaptable or accessible dwelling units*.

SECTION 1009
STAIRWAYS

1009.4.2 Riser height and tread depth. Stair riser heights shall be 7 inches (178 mm) maximum and 4 inches (102 mm) minimum. The riser height shall be measured vertically between the leading edges of adjacent treads. Rectangular stair tread depths shall be 11 inches (279 mm) minimum measured horizontally between the vertical planes of the foremost projection of adjacent treads and at a right angle to the tread's leading edge. Winder treads shall have a minimum tread depth of 11 inches (279 mm) measured between the vertical planes of the foremost projection of adjacent treads at the intersections with the walkline and a minimum tread depth of 10 inches (254 mm) within the clear width of the stair.

Exceptions:

1. Alternating tread devices in accordance with Section 1009.10.

. . .

6. See the Section 3404.1 for the replacement of existing stairways. ***[HCD 1]*** *See Chapter 34, Section ~~3403.1~~ 3401.4.3~~, Exception 2~~ for additions, alterations, or repairs to existing buildings.*

. . .

1009.5 Stairway landings. There shall be a floor or landing at the top and bottom of each stairway. The width of landings shall not be less than the width of stairways they serve. Every landing shall have a minimum dimension measured in the direction of travel equal to the width of the stairway. Such dimension need not exceed 48 inches (1219 mm) where the stairway has a straight run. Doors opening onto a landing shall not reduce the landing to less than one-half the required width. When fully open, the door shall not project more than 7 inches (178 mm) into a landing. When wheelchair spaces are required on the stairway landing in accordance with Section 1007.6.1, the wheelchair space shall not be located in the required width of the landing and doors shall not swing over the wheelchair spaces.

Exception: Aisle stairs complying with Section 1028.

~~*3. **[HCD 1]** In Group R-3 occupancies, a floor or landing is not required at the top of an interior flight of stairs, including stairs in an enclosed garage, provided a door does not swing over the stairs.*~~

1009.12 Handrails. Stairways shall have handrails on each side and shall comply with Section 1012. Where glass is used to provide the handrail, the handrail shall also comply with Section 2407.

Exceptions:

1. Handrails for aisle stairs are not required where permitted by Section 1028.13.

. . .

4. ~~***[HCD 1]***~~ In Group R-3 occupancies, a change in elevation consisting of a single riser at an entrance or egress door does not require handrails ~~*a continuous run of treads or flight of stairs with fewer than four risers does not require handrails.*~~

. . .

SECTION 1010
RAMPS

1010.1 Scope. The provisions of this section shall apply to ramps used as a component of a means of egress.

Exceptions:

1. Other than ramps that are part of the accessible routes providing access in accordance with ~~Sections 1108.2 through 1108.2.4 and 1108.2.6~~ *Chapter 11A or 11B*, ramped aisles within assembly rooms or spaces shall conform with the provisions in Section 1028.11.

2. Curb ramps shall comply with ~~ICC A117.1~~ *Chapter 11A or 11B, Section 1127B.5, as applicable.*

. . .

1010.6.3 Length. The landing length shall be 60 inches (1525 mm) minimum.

Exceptions:

1. In Group R-2 and R-3 individual dwelling and sleeping units that are not required to be ~~A~~*accessible* ~~units, Type A units or Type B units~~ in accordance with ~~Section 1107~~ *Chapter 11A*, landings are permitted to be 36 inches (914 mm) minimum.

. . .

1010.6.4 Change in direction. Where changes in direction of travel occur at landings provided between ramp runs, the landing shall be 60 inches by 60 inches (1524 mm by 1524 mm) minimum.

Exception: In Group R-2 and R-3 individual dwelling or sleeping units that are not required to be ~~A~~accessible ~~units, Type A units or Type B units~~ in accordance with ~~Section 1107~~ *Chapter 11A*, landings are permitted to be 36 inches by 36 inches (914 mm by 914 mm) minimum.

1010.6.5 Doorways. Where doorways are located adjacent to a ramp landing, maneuvering clearances required ~~by ICC A117.1~~ *for accessibility* are permitted to overlap the required landing area *as specified in Chapter 11A or 11B, Section 1133B.5*.

1010.9 Edge protection. Edge protection complying with Section 1010.9.1 or 1010.9.2 shall be provided on each side of ramp runs and at each side of ramp landings. ***[HCD 1-AC]*** *See Chapter 11A, Sections 1114A.7 and 1122A.6, for curb and wheel guide requirements.*

Exceptions:

1. Edge protection is not required on ramps that are not required to have handrails, provided they have flared sides that comply with ~~the ICC A117.1 curb ramp provisions~~ *Chapter 11A or Chapter 11B, Section 1127B.5*.

. . .

SECTION 1011
EXIT SIGNS

1011.3 Tactile exit signs. A tactile sign stating EXIT and complying with ~~ICC A117.1~~ *Section 1117B.5,1, Item 1,* shall be provided adjacent to each door to an area of refuge, an exterior area for assisted rescue, an exit stairway, and exit ramp, an exit passageway and the exit discharge.

SECTION 1014
EXIT ACCESS

1014.2 Egress through intervening spaces. Egress through intervening spaces shall comply with this section.

1. Egress from a room or space shall not pass through adjoining or intervening rooms or areas, except where such adjoining rooms or areas and the area served are accessory to one or the other, are not a Group H occupancy and provide a discernible path of egress travel to an exit.

. . .

3. ~~***[HCD 1]****Except for one- and two- family dwellings and townhouses, means*~~ Means of egress from dwelling units or sleeping areas shall not lead through other sleeping areas, toilet rooms or bathrooms.

. . .

~~*5.* ***[HCD 1]*** *For one- and two- family dwellings and townhouses, means of egress is allowed to pass through rooms and intervening spaces except garages.*~~

SECTION 1015
EXIT AND EXIT ACCESS DOORWAYS

1015.5 Refrigerated rooms or spaces. Rooms or spaces having a floor area larger than 1,000 square feet (93 m^2), containing a refrigerant evaporator and maintained at a temperature below 68°F (20°C), shall have access to not less than two exits or exit access doors.

Travel distance shall be determined as specified in Section 1016.1, but all portions of a refrigerated room or space shall be within 150 feet (45 720 mm) of an exit or exit access door where such rooms are not protected by an approved automatic sprinkler system. Egress is allowed through adjoining refrigerated rooms or spaces.

Exception: Where using refrigerants in quantities limited to the amounts based on the volume set forth in the ~~*International*~~ *California Mechanical Code.*

SECTION 1018
CORRIDORS

1018.5.1 Corridor ceiling. Use of the space between the corridor ceiling and the floor or roof structure above as a return air plenum is permitted for one or more of the following conditions:

1. The corridor is not required to be of fire-resistance-rated construction;

. . .

3. The air-handling system serving the corridor is shut down upon activation of the air-handling unit smoke detectors required by the ~~*International*~~ *California Mechanical Code*.

. . .

SECTION 1022
EXIT ENCLOSURES

1022.8 Floor identification signs. A sign shall be provided at each floor landing in exit enclosures connecting more than three stories designating the floor level, the terminus of the top and bottom of the exit enclosure and the identification of the stair or ramp. The signage shall also state the story of, and the direction to, the exit discharge and the availability of roof access from the enclosure for the fire department. The sign shall be located 5 feet (1524 mm) above the floor landing in a position that is readily visible when the doors are in the open and closed positions. Floor level identification signs in tactile characters complying with ~~ICC A117.1~~ *Chapter 11A or Chapter 11B, Section 1117B.5.1, Item 1,* shall be located at each floor level landing adjacent to the door leading from the enclosure into the corridor to identify the floor level.

NOTE:
Authority Cited: Health and Safety Code Sections 17040, 17050, 17920.9, 17921, 17921.3, 17921.6, 17921.10, 17922, 17922.6, 17922.12, 17927, 17928, 17959.6, 18300, 18552, 18554, 18620, 18630, 18640, 18670, 18690, 18691, 18865, 18871.3, 18871.4, 18873, 18873.1, 18873.2, 18873.3, 18873.4, 18873.5, 18938.3, 18944.11 and 19990; and Government Code Section 12955.1.

Reference: Health and Safety Code Sections 17000 through 17062.5, 17910 through 17995.5, 18200 through 18700, 18860 through 18874, and 19960 through 19997; and Government Code Sections 12955.1 and 12955.1.1.

---

11. HCD proposes to not adopt Chapter 11 and remove it from the printed California Building Code.

CHAPTER 11

ACCESSIBILITY

NOTE:
Authority Cited: Health and Safety Code Sections 17040, 17050, 17920.9, 17921, 17921.3, 17921.6, 17921.10, 17922, 17922.6, 17922.12, 17927, 17928, 17959.6, 18300, 18552, 18554, 18620, 18630, 18640, 18670, 18690, 18691, 18865, 18871.3, 18871.4, 18873, 18873.1, 18873.2, 18873.3, 18873.4, 18873.5, 18938.3, 18944.11 and 19990; and Government Code Section 12955.1.

Reference: Health and Safety Code Sections 17000 through 17062.5, 17910 through 17995.5, 18200 through 18700, 18860 through 18874, and 19960 through 19997; and Government Code Sections 12955.1 and 12955.1.1.

11-A. HCD proposes to bring forward Chapter 11A from the 2007 California Building Code with amendments as follows:

CHAPTER 11A

HOUSING ACCESSIBILITY

Division I — APPLICATION, GENERAL PROVISIONS, AND DEFINITIONS

SECTION 1101A
APPLICATION

1101A.1 Scope. *The application and authority of this chapter are identified and referenced in Sections 1.8.2.1.2 ~~108.2.1.2~~ and 1102A for the Department of Housing and Community Development. Applicable sections are identified in the Matrix Adoption Tables of this code under the abbreviation HCD 1-AC. The provisions of this chapter shall apply to the following:*

1. *All newly-constructed covered multifamily dwellings.*

. . .

These building standards generally do not apply to public accommodations such as hotels and motels. Public use areas, public accommodations and housing which is publicly funded as defined in Chapter 2~~, Chapter 11A, and Chapter 11B~~ of this ~~C~~code are subject to provisions of the Division of the State Architect ~~(DSA/AC)~~ (DSA-AC) and are referenced in Section ~~109.1.1~~ 1.9.1.1.

SECTION 1102A
BUILDING ACCESSIBILITY

1102A.1 Where required. *Buildings or portions of buildings and facilities within the scope of this chapter shall be accessible to persons with disabilities. Each building on a building site shall be considered separately when determining the requirements contained in this chapter, except when calculating the number of units which must comply with Section 1102A.3.1. Dwelling units within a single structure separated by firewalls do not constitute separate buildings*

Newly-constructed covered multifamily dwellings as defined in this chapter, include, but are not limited to, the following:

1. *Apartment buildings with 3 or more dwelling units including timeshare apartments not considered a place of public accommodation or transient lodging as defined in Health and Safety Code Section 19955 (a),and Chapter 2 of the California Building Code.*

. . .

9. *Other Group R Occupancies in covered multifamily dwellings which are regulated by the Office of the State Fire Marshal. See Section 1.11 ~~111~~.*

10. *Housing which is publicly funded as defined in Chapter 2 of this code is subject to provisions of the Division of the State Architect (DSA-AC). See Section 1111~~.~~B.5.*

1102A.2 Existing buildings. *The building standards contained in this chapter do not apply to the alteration, repair, rehabilitation or maintenance of multifamily dwellings ~~Group R Occupancies~~ constructed for first occupancy prior to March 13, 1991. Housing which is publicly funded as defined in Chapter 2 of this code ~~are~~ is subject to provisions of the Division of the State Architect (DSA-AC). See Section 1111~~.~~B.5.*

Covered multifamily dwellings shall be maintained in compliance with the accessibility standards in effect at the time of construction. Apartments constructed prior to March 13, 1991, shall be maintained in compliance with the accessibility standards in effect at the time of construction.

Additions ~~to Group R occupancies~~ shall be subject to the requirements of this chapter, provided the addition, when considered alone, meets the definition of a covered multifamily dwelling, as defined in this chapter.

New common use spaces serving existing covered multifamily dwellings shall be subject to the requirements of this chapter.

Note: *For all existing public use areas, public accommodations, and housing which is publicly funded, see Chapter 11B, Division IV, Section 1134B, for provisions of the Division of the State Architect, Access Compliance (DSA-AC).*

1102A.3 Multistory dwellings.

1102A.3.1 Multistory apartment or condominium dwellings in buildings with no elevator. *This section shall apply to multistory dwelling units on the ground floor of buildings without elevators for which an application for a construction permit is submitted on or after July 1, 2005.*

> ***Exception:*** *Carriage units as defined in Section 1107A.3-C and regulated only by the Department of Housing and Community Development as referenced in Section 1.8.2.1.2 ~~108.2.1.2~~.*

At least 10 percent but not less than one of the multistory dwellings in apartment buildings with 3 or more dwelling units and/or condominiums with 4 or more dwelling units shall comply with the following:

1. *The primary entry to the dwelling unit shall be on an accessible route unless exempted by site impracticality tests in Section 1150A.*

. . .

4. *Common use areas covered by this section shall be accessible as required by this chapter. Public use areas as defined in Chapter 2, Chapter 11A, and Chapter 11B of this code are subject to provisions of the Division of the State Architect (DSA-AC) and are referenced in Section 1.9.1.1 ~~109.1.1~~.*

The minimum number of multifamily dwelling units which must comply with this section shall be calculated using the total number of all multistory dwelling units in buildings on a site which are subject to this section. Any fraction thereof shall be rounded to the next highest whole number.

SECTION 1103A
DESIGN AND CONSTRUCTION

1103A.1 General.

1103A.1.1 *When buildings are required to be accessible, they shall be designed and constructed as provided in this chapter.*

Note: *Public use areas, public accommodations, and housing which is publicly funded as defined in Chapter 2~~, Chapter 11A, and Chapter 11B~~ of this code are subject to provisions of the Division of the State Architect (DSA-AC) and are referenced in Section 1.9.1.1 ~~109.1.1~~.*

SECTION 1104A
COVERED MULTIFAMILY DWELLINGS

1104A.1 General. *All ground-floor dwelling units in nonelevator buildings shall be adaptable and on an accessible route, unless an accessible route is not required as determined by site impracticality provisions in Section 1150A. For buildings with elevators, see Section 1106A.*

Multistory dwelling~~s~~ units shall comply with Section 1102A.3.

1104A.2 Ground floors above grade. *Where the first floor containing dwelling units in a building is above grade, all units on that floor shall be served by an accessible route. This floor will be considered a ground floor and all dwelling units are considered covered multifamily dwelling units.*

> ***Exception:*** *Carriage units as defined in Section 1107A.3.C and regulated only by the Department of Housing and Community Development as referenced in Section 1.8.2.1.2 ~~108.2.1.2~~.*

Multistory dwelling~~s~~ units shall comply with Section 1102A.3.

SECTION 1106A
SITE AND BUILDING CHARACTERISTICS

1106A.1 General. *Covered multifamily dwellings with elevators shall be designed and constructed to provide at least one accessible entrance on an accessible route, regardless of terrain or unusual characteristics of the site. Covered multifamily dwellings without elevators shall be designed and constructed to provide at least one accessible entrance on an accessible route unless terrain or unusual characteristics of the site prevent an accessible route based on the conditions listed below:*

1. *Accessible Entrance. Regardless of site considerations described in Section 1150A, an accessible entrance on an accessible route is required when there is an elevator connecting the parking area with the dwelling units on a ground floor. (In this case, those dwelling units on the ground floor served by an elevator, and at least one of each type of public- and common-use areas, would be subject to these requirements.)*

2. *Elevator Building. When a building elevator or elevators are provided as a means of access to dwelling units other than dwelling units on a ground floor (see Section 1104A.2), the building is an elevator building. All dwelling units become covered multifamily dwellings in that building. The elevator in that building must provide accessibility to all dwelling units in the building, regardless of the slope of the natural terrain. For multistory dwelling units in buildings with one or more elevators, see Section 1102A.3.2.*

. . .

SECTION 1107A
DEFINITIONS

For the purpose of this chapter, certain terms are defined as follows:

1107A.3-C

COVERED MULTIFAMILY DWELLINGS *are dwelling units in buildings consisting of 3 or more dwelling units or 4 or more condominium units. Covered multifamily dwellings include dwelling units listed in Section 1102A.1. Dwelling units within a single structure separated by firewalls do not constitute separate buildings.*

Note: *For buildings or complexes containing publicly funded dwelling units, see Chapter 11B, Section 1111B.5 for provisions of the Division of the State Architect~~,~~ Access Compliance (DSA-AC).*

1107A.4-D

DETECTABLE WARNING *is a standardized surface or feature built into or applied to walking surfaces or other elements to warn visually impaired persons of hazards in the path of travel. Only approved ~~DSA/AC~~ DSA-AC detectable warning products and directional surfaces shall be installed as provided in the CCR, Title 24, Part 1, Articles 2, 3, and 4. Refer to CCR, Title 24, Part 12, Chapter 12-11A and B for building and ~~facilities~~ facility access specifications for product approval for detectable warning products and directional surfaces.*

Note: *Detectable warning products and directional surfaces installed after January 1, 2001, shall be evaluated by an independent entity, selected by the Department of General Services, Division of the State Architect – Access Compliance, for all occupancies, including transportation and other outdoor environments, except that when products and surfaces are for use in residential housing, evaluation shall be in consultation with the Department of Housing and Community Development. See Government Code Section 4460.*

1107A.5-E

EQUIVALENT FACILITATION *is an alternate means of complying with the literal requirements of these standards and specifications that provides access consistent with the purpose of these standards and specifications.*

Notes:

1. *See Section 1.8.1 ~~108.1~~, Purpose.*

. . .

Division II — EXTERIOR FACILITIES

SECTION 1108A
GENERAL REQUIREMENTS FOR ACCESSIBLE PARKING AND EXTERIOR ROUTES OF TRAVEL

Notes:

1. *In addition to provisions of this division, exterior routes of travel that provide access to, or egress from, buildings for persons with disabilities shall also comply with Chapter 10.*

2. *Public use areas, public accommodations, and housing which is publicly funded as defined in Chapter 2~~, Chapter 11A, and Chapter 11B~~ of this code are subject to provisions of the Division of the State Architect (DSA-AC) and are referenced in Section 1.9.1.1 ~~109.1.1~~.*

SECTION 1109A
PARKING FACILITIES

1109A.8.1 Vertical Clearances. *~~Where required to be accessible, all entrances into, and vertical clearances within parking facilities shall have a minimum vertical clearance of 8 feet 2 inches (2489 mm) from the floor to the lowest projection from the ceiling.~~ All entrances, exits, and vehicular passageways to and from required accessible parking spaces within parking facilities, shall have a minimum vertical clearance of 8 feet 2 inches (2489 mm) from the floor to the lowest projection of the ceiling. Reflective warning signs complying with Section 1117B.5.4 for character height shall be installed at transitions from the 8 feet 2 inch ceiling to lower ceiling heights in vehicular passageways in the same parking level,*

1109A.8.5 Accessible single parking space*. Where accessible single spaces are provided, they shall be constructed in accordance with the following:*

1. *Single spaces shall be 14 feet (4267 mm) wide and lined to provide a 9-foot (2743 mm) wide parking area and a 5-foot (1524 mm) wide loading and unloading access aisle on the passenger side of the vehicle (see Figure 11A-2B) with the vehicle parked in the forward position.*

2. *When more than one space is provided, two 9-foot (2743 mm) wide parking spaces may be lined on each side of a 5-foot (1524 mm) wide loading and unloading access aisle (see Figure 11A-2A, and 11A-2C).*

3. *The minimum length of each parking space shall be 18 feet (5486 mm).*

4. *The loading and unloading access aisle shall be marked by a border painted blue. Within the blue border, hatched lines a maximum of 36 inches (914 mm) on center shall be painted a color contrasting with the parking surface, preferably blue or white. The words "NO PARKING" shall be painted on the ground within each 5-foot (1524 mm) wide loading and unloading access aisle. This notice shall be painted in white letters no less than 12 inches (305 mm) high and located so that it is visible to traffic enforcement officials (see Figures 11A-2A, 11A-2B, and 11A-2C).*

1109A.8.6 Van accessible parking space. *One in every eight accessible spaces, but not less than one, shall be van accessible and shall be constructed in accordance with the following:*

1. *Each space shall be served by a loading and unloading access aisle at least 8 feet (2438 mm) wide, placed on the passenger side with the vehicle parked in the forward position.*

. . .

5. *The loading and unloading access aisle shall be marked by a border painted blue. Within the blue border, hatched lines a maximum of 36 inches (914 mm) on center shall be painted a color contrasting with the parking surface, preferably blue or white. The words "NO PARKING" shall be painted on the ground within each 8-foot (2438 mm) wide loading and unloading access aisle. This notice shall be painted in white letters no less than 12 inches (305 mm) high and located so that it is visible to traffic enforcement officials.*

   Note: *See Figures 11A-2A, 11A-2B, and 11A-2C.*

1109A.8.8 Parking signage. *Each accessible parking space reserved for persons with disabilities shall be identified by a reflective sign permanently posted immediately adjacent to and visible from each stall or space consisting of the "International Symbol of Accessibility" in white on a dark blue background. The sign shall not be smaller than 70 square inches (4516 mm^2) in area and, when in a path of travel, shall be posted at a minimum height of 80 inches (2032 mm) from the bottom of the sign to the parking space finished grade. Signs may also be centered on the wall at the interior end of the parking space at a minimum height of 36 inches (914 mm) from the parking space finished grade, ground or sidewalk. Van accessible spaces shall comply with Section 1109A.8.6 and shall have an additional sign or additional language stating "Van Accessible" below the symbol of accessibility.*

Note: *When assigned resident parking is provided, signage is not required except for unassigned or visitor parking spaces.*

An additional sign shall also be posted in a conspicuous place at each entrance to off-street parking facilities or immediately adjacent to and visible from each accessible stall or space. The sign shall not be less than 17 inches (432 mm) by 22 inches (559 mm) in size with lettering not less than 1 inch (25.4 mm) in height, and shall clearly and conspicuously state the following:

"Unauthorized vehicles parked in designated accessible spaces not displaying distinguishing placards or special license plates issued for persons with disabilities ~~may~~ will be towed away at the owner's expense. Towed vehicles may be reclaimed at _____ or by telephoning_____."

Blank spaces are to be filled in with appropriate information as a permanent part of the sign.

. . .

SECTION 1112A
CURB RAMPS ON ACCESSIBLE ROUTES

1112A.4 Diagonal curb ramps*. If diagonal (or corner-type) curb ramps have returned curbs or other well-defined edges, such edges shall be parallel to the direction of pedestrian flow. The bottom of diagonal curb ramps shall have a 48-inch (1219 mm) minimum clear space as shown in Figures 11A-3A through 11A-3M. If diagonal curb ramps are provided at marked crossings, the 48-inch (1219 mm) clear space shall be within the markings (see Figures 11A-3A through 11A-3M). If diagonal curb ramps have flared sides, they shall also have at least a 24-inch-long (610 mm) segment of straight curb located on each side of the curb ramp and within the marked crossing. See Figures 11A-3A through 11A-3M.*

SECTION 1113A
WALKS AND SIDEWALKS ON AN ACCESSIBLE ROUTE

1113A.5 Smooth surface. *The bottom 10 inches (254 mm) of all doors and/or gates except automatic and sliding doors or gates shall have a smooth, uninterrupted surface to allow the door or gate to be opened by a wheelchair footrest without creating a trap or hazardous condition. Where narrow frame doors are used, a 10-inch (254 mm) high smooth panel shall be installed on the push side of the door, which will allow the door to be opened by a wheelchair footrest without creating a trap or hazardous condition.*

1113A.6 Gratings. *Walks, sidewalks and pedestrian ways on an accessible route shall be free of gratings whenever possible. Gratings located in the surface of any of these areas, grid openings in gratings shall be limited to 1/2 inch (12.7 mm) in the direction of traffic flow.*

Exceptions:

1. *Where the enforcement agency determines that compliance with this section would create an unreasonable hardship, an exception may be granted when equivalent ~~facilities are~~ facilitation is provided.*

. . .

SECTION 1114A
EXTERIOR RAMPS AND LANDINGS ON ACCESSIBLE ROUTES

1114A.1 Width. *The width of ramps shall be consistent with the requirements for exits in Chapter 10 of this code, but in no case shall the ramp width be less than the following:*

1. *Ramps serving accessible entrances to covered multifamily buildings where the ramp is the only exit discharge path and serves an occupant load of 300 or more shall have a minimum clear width of 60 inches (1524 mm).*

2. *Ramps serving accessible entrances of covered multifamily dwellings ~~in Group R Occupancies~~ with an occupant load of 10 or less may be 36 inches (914 mm) in clear width.*

. . .

1114A.4.1 Location of landings. *Landings shall be provided at the top and bottom of each ramp. Intermediate landings shall be provided at intervals not exceeding 30 inches (762 mm) of vertical rise and at each change of direction. Landings are not considered in determining the maximum horizontal distance of each ramp.*

Note: *Examples of ramp dimensions are:*

SLOPE (GRADING %)	***MAXIMUM RISE (Inches)***	***MAXIMUM HORIZONTAL PROJECTION ~~(FEET)~~ (Feet)***
	(x 25.4 for mm)	***(x 304.8) for mm)***
1:12 (8.33%)	*30*	*30*
1:15 (6.67%)	*30*	*37.5*
1:16 (6.25%)	*30*	*40*
1:20 (5.00%)	*30*	*50*

1114A.5 Ramp height. *Ramps more than 30 inches (762 mm) above the adjacent floor or ground and open on one or both sides shall be provided with guardrails as required by Section 1013 ~~509~~. Guardrails shall be continuous from the top of the ramp to the bottom of the ramp.*

1114A.6 Ramp handrails.

1114A.6.1 Where required. *Handrails shall be provided at each side of ramps when the slope exceeds 1 unit vertical in 20 units horizontal (5~~%~~-percent slope). Handrails on all ramps shall be continuous.*

Exceptions:

1. *Curb ramps.*

. . .

SECTION 1115A
EXTERIOR STAIRWAYS

1115A.6 Exterior stairway handrails.

1115A.6.1 Where required. *Stairways shall have handrails on each side. Intermediate handrails shall be located equidistant from the sides of the stairway and comply with Section ~~1012.8~~ 1012.9.*

Exception: *Stairways serving an individual dwelling unit may have one handrail, except that stairways open on one or both sides shall have handrails on the open side or sides.*

SECTION 1116A
HAZARDS ON ACCESSIBLE ROUTES

1116A.4 Free-standing signs. *Wherever signs mounted on posts or pylons protrude from the post or pylons and the bottom edge of the sign is less than 80 inches (2032 mm) above the finished floor or ground level, the edges of such signs shall be rounded or eased and the corners shall have a minimum radius of 0.125 inches (see Section 1116A.2 for required headroom clearance).*

Division III — BUILDING FEATURES

SECTION 1121A
CHANGES IN LEVEL ON ACCESSIBLE ROUTES

1121A.2 Changes greater than ~~one-half~~ ½ inch. *Changes in level greater than 1/2 inch (12.7 mm) shall be made by means of a sloped surface not greater than 1 unit vertical in 20 units horizontal (5-percent slope), or a curb ramp, ramp, elevator or platform (wheelchair) lift. When stairs are located along or adjacent to an accessible route they shall comply with Section 1123A for interior stairways.*

SECTION 1122A
INTERIOR RAMPS AND LANDINGS ON ACCESSIBLE ROUTES

1122A.1 Width. *The width of ramps shall be consistent with the requirements for exits in Chapter 10 of this code, but in no case shall the ramp width be less than the following:*

1. *Ramps serving accessible entrances to covered multifamily buildings where the ramp is the only exit discharge path and serves an occupant load of 300 or more shall have a minimum clear width of 60 inches (1524 mm).*

2. *Ramps serving accessible entrances to covered multifamily dwellings ~~in Group R Occupancies~~ with an occupant load of 10 or less may be 36 inches (914 mm) in clear width.*

. . .

1122A.3.1 Location of landings. *Landings shall be provided at the top and bottom of each ramp. Intermediate landings shall be provided at intervals not exceeding 30 inches (762 mm) of vertical rise and at each change of direction. Landings are not considered in determining the maximum horizontal distance of each ramp.*

Note: *Examples of ramp dimensions are:*

SLOPE (GRADING %)	***MAXIMUM RISE (~~INCHES~~Inches)***	***MAXIMUM HORIZONTAL PROJECTION ~~(FEET)~~ (Feet)***
	(x 25.4 for mm)	***(x 304.8) for mm)***
1:12 (8.33%)	*30*	*30*
1:15 (6.67%)	*30*	*37.5*
1:16 (6.25%)	*30*	*40*
1:20 (5.00%)	*30*	*50*

1122A.3.4 Encroachment of doors. *Doors in any position shall not reduce the minimum dimension of the landing to less than 42 inches (1067 mm) and shall not reduce the required width by more than 3 inches (76.2 mm) when fully open. (See Figure ~~11A-6d~~ 11A-6D).*

1122A.4 Ramp height. *Ramps more than 30 inches (762 mm) above the adjacent floor or ground and open on one or both sides shall be provided with a guard~~rails~~ as required by Section 1013 ~~509~~. Guardrails shall be continuous from the top of the ramp to the bottom of the ramp.*

SECTION 1123A
INTERIOR STAIRWAYS

1123A.1. General. *Interior stairways serving buildings containing covered multifamily dwelling units shall comply with this section.*

~~***Note:*** *This section shall not apply to interior stairways serving floors or dwelling units not required to be accessible.*~~

1123A.6 Interior stairway handrails.

1123A.6.1 Where required. *Stairways shall have handrails on each side. Intermediate handrails shall be located equidistant from the sides of the stairway and comply with Section ~~1012.8~~ 1012.9.*

Exception: *Stairways serving an individual dwelling unit may have one handrail, except that stairways open on one or both sides shall have handrails on the open side or sides.*

SECTION 1124A
ELEVATORS AND PLATFORM (WHEELCHAIR) LIFTS

1124A.1 General. *Elevators provided in covered multifamily buildings shall be accessible. Elevators required to be accessible shall ~~and~~ comply with this chapter, ASME A17.1, Safety Code for Elevators and Escalators, Title 8, ~~24, Part 7~~ of the California Code of Regulations, under "Elevator Safety Orders," and any other applicable safety regulations of other administrative authorities having jurisdiction.*

Exception: *Private elevators serving only one dwelling unit.*

1124A.3 Size of cab and control locations.

1124A.3.4 Emergency telephone. *The emergency telephone handset shall be positioned no higher than 48 inches (1219 mm) above the floor, and the handset cord shall be a minimum of 29 inches (737 mm) in length. If the telephone system is located in a closed compartment, the compartment door hardware shall be a lever type conforming to the provisions of Section ~~1003.3.1.8~~ 1126A.6.1. Emergency intercommunication shall not require voice communication.*

SECTION 1126A
DOORS

1126A.1 Width and height of doors. *Doorways which provide access to common use areas or covered multifamily dwellings shall comply with the following:*

1. *Permit the installation of a door not less than 36 inches (914 mm) in width, not less than 80 inches (2032 mm) in height and provide a clear width of not less than 32 inches (813 mm), measured with the door positioned at an angle of 90 degrees from its closed position.*

. . .

4. *The width of any component in the egress system shall not be less than the minimum width required by Section 1005 ~~1003.2.3~~.*

. . .

1126A.5 Type of lock or latch. *The type of latch and lock required for all doors shall be in accordance with Chapter 10, Section 1008 ~~1003.3.1.8~~.*

1126A.7 Smooth surface. *The bottom 10 inches (254 mm) of all doors and/or gates shall have a smooth, uninterrupted surface to allow the door or gate to be opened by a wheelchair footrest without creating a trap or hazardous condition. Where narrow frame doors are used, a 10-inch (254 mm) high smooth panel shall be installed on the push side of the door, which will allow the door to be opened by a wheelchair footrest without creating a trap or hazardous condition. ~~(See Figure 11A-8J).~~*

Exception: *Automatic and sliding doors or gates.*

SECTION 1127A
COMMON USE FACILITIES

1127A.2.2 Single-accommodation toilet facilities. *Single-accommodation toilet facilities shall comply with the following:*

1. ***Wheelchair Clearance.*** *There shall be sufficient space in the toilet room for a wheelchair measuring 30 inches (762 mm) wide by 48 inches (1219 mm) long to enter the room and permit the door to close. There shall be in the room a clear floor space of at least 60 inches (1524 mm) in diameter, or a T-shaped space complying with Figure 11A-1D.*

. . .

5. ***Accessible Route.*** *All doors, fixtures and controls shall be on an accessible route. The minimum clear width of an accessible route shall be 36 inches (914 mm) except at doors~~,~~ (See Section 1126A). If a person in a wheelchair must make a turn around an obstruction, the minimum clear width of the accessible route shall be as shown in Figure 11A-1C. (See also Figure 11A-9B).*

1127A.9.4 Clear floor or ground space for wheelchairs.

1127A.9.4.3.1 Gratings. *Gratings located in ground and floor surfaces along accessible routes shall be limited to spaces no greater than ½-inch (12.7 mm) wide in one direction. If gratings have elongated openings, they shall be placed so that the long dimension is perpendicular to the ~~dominate~~ dominant direction of traffic.*

1127A.9.5 Reach ranges.

1127A.9.5.2 Side reach. *If the clear floor space allows parallel approach by a person in a wheelchair, the maximum high side reach allowed shall be 54 inches (1372 mm) and the low side reach shall be no less than 9 inches (228.6 mm) above the floor (see Figure 11A-1J(a) and 11A-1J(b)). If the side reach is over an obstruction, the reach and clearances shall be as shown in Figure 11A-1J~~C~~(c).*

1127A.10 Common accessible laundry rooms*.*

1127A.10.2 Clear floor space. *There shall be a minimum clear space 30 inches perpendicular by 48 inches parallel (762 mm by 1219 mm) in front of clothes washers and dryers required to be accessible.*
There shall be a minimum clear space 30 inches by 48 inches (762mm by 1219 mm) provided for at least one of each type of fixture or appliance provided in the laundry room (e.g., soap dispensers, wash sinks, tables, storage areas).

1127A.11 Storage.

1127A.11.1 General. *If fixed storage facilities such as cabinets, shelves, closets or drawers are provided where access is required by Sections 1.8.2.1.2 ~~108.2.1.2~~ and 1102A, at least one of each type of facility provided shall comply with this section. Additional storage may be provided outside of the reach ranges shown in Figure 11A-1J.*

SECTION 1132A
DOORS

1132A.3 Width and height of doors. *Doors shall comply with the following:*

1. *Doors shall not be less than 6 feet 8 inches (2032 mm) in height.*

. . .

6. *The width of any component in the means of egress system shall not be less than the minimum width required by Section 1005 ~~1003.2.3~~.*

1132A.4 Level floor or landing. *See also Chapter 10~~, Section 1003.3.1.6.2~~. The floor or landing on each side of a door shall be level. Primary entry doors, required exit doors or secondary exterior doors with changes in height between the interior surface or floor level and the exterior surface or floor level shall comply with the following:*

1. *Exterior landings of impervious construction (e.g., concrete, brick, flagstone) serving primary entry doors and required exit doors are limited to not more than 1/2 inch (12.7 mm) of change in height between floor surfaces. Changes in level shall comply with Section 1131A.*

. . .

1132A.4.1 Thresholds. *Thresholds at the primary entry and required exit doors shall be no higher than 1/2 inch (12.7 mm). Thresholds at secondary exterior doors, including sliding door tracks, shall be no higher than 3/4 inch (19.05 mm). Changes in height at interior door thresholds (e.g.~~,~~ floor material changes at door thresholds) shall not exceed 1/2 inch (12.7 mm). Thresholds shall comply with the following:*

1. *Thresholds with a change in height of not more than 1/4 inch (6.35 mm) may be vertical.*

. . .

1132A.5 Maneuvering clearances at doors.

1132A.5.1 General. *Maneuvering clearances at interior doors shall provide a minimum length on both sides of the door of at least 42 inches (1067 mm) measured at a right angle to the plane of the door in its closed position.*

Exceptions:

1. *A 39-inch (991 mm) length is acceptable when a minimum clear opening width of 34 inches (864 mm) is provided.*

. . .

1132A.7 Type of lock or latch. *The type of latch and lock required for all doors shall be in accordance with Chapter 10, Section 1008 ~~1003.3.1.8~~.*

1132A.9 Smooth surface. *The bottom 10 inches (254 mm) of all doors shall have a smooth, uninterrupted surface to allow the door to be opened by a wheelchair footrest without creating a trap or hazardous condition. Where narrow frame doors are used, a 10-inch-high (254 mm) smooth panel shall be installed on the push side of the door which will allow the door to be opened by a wheelchair footrest without creating a trap or hazardous condition. ~~(See Figure 11A-8J).~~*

Exception: *Automatic and sliding doors.*

1132A.10 Door signal devices. *Every primary entrance to a covered multifamily dwelling unit shall be provided with a door buzzer, bell, chime or equivalent~~,~~. The activating mechanism shall be mounted a maximum of 48 inches (1219 mm) above the floor and connected to permanent wiring.*

SECTION 1133A
KITCHENS

1133A.2 Clear floor space. *Clear floor space at kitchens shall comply with the following:*

1. *A clear floor space at least ~~30-inches~~ 30 inches (762 mm) by ~~48-inches~~ 48 inches (1219 mm) that allows a parallel approach by a person in a wheelchair shall be provided at the range or cooktop.*

. . .

1133A.2.1 Clear width. *Kitchens shall have a minimum clear width measured between any cabinet, countertop or the face of any appliance (excluding handles and controls) that projects into the kitchen and the opposing cabinet, countertop, appliance or wall as follows:*

1. *U-shaped kitchens, designed with parallel approach at a range or cooktop located at the base of the U, shall have a minimum clear width of at least 60 inches (1524 mm). (See Figure 11A-10A).*

2. *U-~~S~~shaped kitchens, designed with a cooktop or sink located at the base of the U which provides a 30-inch wide (762 mm) knee space to a height of 27 inches (686 mm) above the floor to allow for a forward approach, shall have a clear width of at least 48 inches (1219 mm). (See Figure 11A-10A).*

. . .

1133A.4.1 Repositionable countertops. *Repositionable countertops shall be provided in a minimum of 5 percent of the covered multifamily dwelling units. Repositionable countertops shall comply with the following:*

1. *The kitchen sink and work surface space required by 1133A.4 shall be designed to enable repositioning to a minimum height of 28 inches (711 mm).*

. . .

4. *Finished flooring shall be extended to the wall beneath the sink and work surface.*

   Exceptions:

   1. *Stone, cultured stone and tiled countertops may be used without meeting the repositioning requirements.*

   . . .

SECTION 1134A
BATHING AND TOILET FACILITIES

1134A.6 Showers. *Showers required to be accessible shall comply with this section.*

1. ***Size.*** *When one or more shower stalls are provided within the same dwelling unit, at least one shower stall shall comply with one of the following requirements.*

2. ***Slope.*** *The maximum slope of the shower floor shall be ½ inch (12.7 mm) per foot in any direction and shall slope to a drain ~~located within 6 inches (152.4 mm) of the rear wall~~. The floor surfaces shall be of Carborundum or grit-faced tile or of material providing equivalent slip resistance.*

. . .

5. ***Thresholds.*** *When a threshold is used, it shall be a maximum of 2 inches (50.8 mm) in height and have a beveled or sloped angle not exceeding 1 unit vertical in 2 units horizontal (26.6 degrees from the horizontal). Thresholds ½ inch (12.7 mm) or less in height may have a beveled or sloped angle not exceeding 1 unit vertical in 1 unit horizontal (45 degrees from the horizontal).*

. . .

7. ***Shower Enclosures.*** *Doors and panels of shower enclosures shall be substantially constructed from approved, shatter-resistant materials. Hinged shower doors shall open outward. Glazing used in doors and panels of shower enclosures shall be fully tempered, laminated safety glass or approved plastic. When glass is used, it shall have minimum thickness of not less than 1/8 inch (3.17 mm) when fully tempered, or ¼ inch (6.35 mm) when laminated, and shall pass the test requirements of this part, Chapter 24, Glass and Glazing. Plastics used in doors and panels of shower~~s~~ enclosures shall be of a shatter-resistant type.*

1134A.8 Lavatories, vanities, mirrors and towel fixtures. 1134A.8 Lavatories, vanities, mirrors and towel fixtures*. Bathrooms or powder rooms required to be accessible shall have at least one accessible lavatory. Where mirrors and towel fixtures are provided, at least one of each shall be accessible.*

1. ***Location.*** *Vanities and lavatories shall be installed with the centerline of the fixture a minimum of 18 inches (457 mm) horizontally from an adjoining wall or fixture to allow for forward approach. When parallel approach is provided, lavatories shall be installed with the centerline of the fixture a minimum of 24 inches (610 mm) horizontally from an adjoining wall or fixture. The top of the fixture rim shall be a maximum of 34 inches (864 mm) above the finished floor.*

. . .

4. ***Knee and ~~t~~Toe ~~s~~Space.*** *Knee and toe space shall be provided as follows:*

4.1. The knee space shall be at least 30 inches (762 mm) wide and 8 inches (203.2 mm) deep.

. . .

SECTION 1136A
ELECTRICAL RECEPTACLE, SWITCH AND CONTROL HEIGHTS

1136A.2 Switch and control heights. *Controls or switches intended to be used by the occupant of the room or area to control lighting and receptacle outlets, appliances, alarms or cooling, heating and ventilating equipment shall be located no more than 48 inches (1219 mm) measured from the top of the outlet box nor less than 15 inches (381 mm) measured from the bottom of the outlet box to the level of the finished floor or working platform. If the reach is over a physical barrier or an obstruction (for example, a kitchen base cabinet) between 20 and 25 inches (508 and 635 mm) in depth, the maximum height is reduced to 44 inches (1118 mm) for forward approach, or 46 inches (1168 mm) for side approach, provided the obstruction is no more than 24 inches (610 mm) in depth. Physical barriers or obstructions shall not extend more than 25 inches (635 mm) from the wall beneath a control.*
Controls that do not satisfy these specifications are ~~acceptable provided~~ acceptable provided that comparable controls or outlets, that perform the same functions, are provided within the same area and are accessible.

Exception: *Appliances (e.g., kitchen stoves, dishwashers, range hoods, microwave ovens and similar appliances) which have controls located on the appliance.*

Division V — FEATURES COMMON TO EXTERIOR AND INTERIOR OF BUILDINGS

SECTION 1139A
ACCESSIBLE DRINKING FOUNTAINS

1139A.3.1 Location. *Water fountains shall be located completely within alcoves or otherwise positioned so as not to encroach into pedestrian ways. The alcove in which the water fountain is located shall not be less than 32 inches (813 mm) in width and 18 inches (457 mm) in depth. Protruding objects located in alcoves or otherwise positioned so as to limit encroachment into pedestrian ways are permitted to project 4 inches (102 mm) into walks, halls, corridors, passageways or aisles. (See Figure 11A-11A).*

Exception: *When the enforcing agency determines that it would create an unreasonable hardship to locate the water fountain in an alcove, the water fountain may project into the path of travel, and the path of travel shall be identifiable to the blind as follows:*

1. *The surface of the path of travel at the water fountain shall be textured so that it is clearly identifiable by a blind person using a cane. The minimum textured area shall extend from the wall supporting the water fountain to 1 foot (305 mm) beyond the front edge of the water fountain and shall extend 1 foot (~~305mm~~ 305 mm) beyond each side of the water fountain, or*

. . .

SECTION 1140A
ACCESSIBLE TELEPHONES

1140A.4 Mounting height. *The highest operable part of the telephone shall be within the reach ranges specified in ~~the~~ Figure 11A-11B. Telephones mounted diagonally in a corner that require wheelchair users to reach diagonally shall have the highest operable part no higher than 54 inches (1372 mm) above the floor. (See Figure 11A-11B).*

SECTION 1142A
ELECTRICAL RECEPTACLE, SWITCH AND CONTROL HEIGHTS

1142A.1 Receptacle heights. *Electrical receptacle outlets on branch circuits of 30 amperes or less and communication system receptacles shall be located no more than 48 inches (1219 mm) measured from the top of the receptacle outlet box or receptacle housing nor less than 15 inches (381 mm) measured from the bottom of the receptacle outlet box or receptacle housing to the level of the finished floor or working platform. If the reach is over an obstruction (for example, a kitchen base cabinet) between 20 and 25 inches (508 and 635 mm) in depth, the maximum height measured at the box is reduced to 44 inches (1118 mm) for forward approach, or 46 inches (1168 mm) for side approach, provided the obstruction is no more than 24 inches (610 mm) in depth. Obstructions shall not extend more than 25 inches (635 mm) from the wall beneath the receptacle.*

Outlets that do not satisfy these specifications are acceptable provided that comparable outlets, that perform the same functions, are provided within the same area and are accessible.

Exceptions:

1. *Receptacle outlets installed as part of permanently installed baseboard heaters are exempt.*

. . .

4. *This section shall not apply to existing buildings when the enforcing agency determines that compliance with these standards would create an unreasonable hardship.*

Note: *The intent of the measurement is to ensure that receptacles fall within the reach range of 15 inches to 48 inches (381 mm to 1219 mm).*

SECTION 1143A
SIGNAGE

1143A.3. Directional and informational signs. *When signs direct to or give information about permanent rooms and spaces of a building or site, they shall comply with 1143A.5, 1143A.6 and 1143A.7.*

1143A.5 Finish and contrast. *Characters, symbols and their background shall have a non-glare finish. Characters and symbols shall contrast with their background, either light on a dark background or dark on a light background.*

Division VI — SITE IMPRACTICALITY TESTS

SECTION 1150A
SITE IMPRACTICALITY TESTS

1150A.1 General. *Covered multifamily dwellings in buildings without an elevator, located on sites with difficult terrain conditions or unusual characteristics, may employ the site impracticality tests in this division for determining the accessibility and adaptability provisions required by this chapter.*

Except as provided for in Section 1102A.3.1, the provisions of this section do not apply to multistory dwelling units in nonelevator buildings.

SINGLE BUILDING WITH ONE COMMON (LOBBY) ENTRANCE

The following may only be used for determining required access to covered multifamily dwelling units, in a single building with one common (lobby) entrance, located on a site with difficult terrain conditions or unusual characteristics:

All ~~ground-floor~~ ground floor units in nonelevator buildings shall be adaptable and on an accessible route unless an accessible route to the common (lobby) entrance is not required as determined by Test No. 1, Individual Building Test, or Test No. 3, Unusual Characteristics Test, as described in this section.

Sites where either Test No. 1 or Test No. 3 is used and it is determined that an accessible route to the common (lobby) entrance is not required, at least 20 percent of the ground floor dwelling units shall comply with Division IV, and all remaining ground floor dwelling units shall comply with the features listed in Section 1150A.2 unless exempted by Test No. 3, Unusual Characteristics Test.

Test No. 1-- Individual Building Test may only be used if the site has terrain over 15 percent slope.

Test No. 3 -- Unusual Characteristics Test may be used if applicable.

Provisions to Test Nos. 1 and 2. *Where a building elevator is provided only as means of creating an accessible route to covered multifamily dwelling units on a ground floor, the building is not considered to be an elevator building for purposes of this code; hence, only the ground floor dwelling units would be covered.*

TEST NO. 1 – INDIVIDUAL BUILDING TEST

. . .

TEST NO. 2 – SITE ANALYSIS TEST

For a site having multiple buildings, or a site with a single building with multiple entrances, it is not required to provide an accessible route to all ground floor units under the following conditions:

1. *Calculate the percentage of the total buildable area of the undisturbed site with a natural grade less than 10- percent slope. The analysis of the existing slope (before grading) shall be done on a topographic survey with 2-foot (610 mm) contour intervals with slope determination made between each successive interval. The accuracy of the slope analysis shall be certified by a licensed engineer, landscape architect, architect or surveyor.*

2. *Determine the requirement of providing an accessible route to planned multifamily dwellings based on the topography of the existing natural terrain. The minimum percentage of ~~ground-floor~~ ground floor units required on an accessible route shall equal the percentage of the total buildable area (not restricted-use areas) of the undisturbed site with an existing natural grade of less than 10-percent slope. In no case shall less than 20 percent of the ground floor dwelling units be on an accessible route and comply with the provisions of Division IV.*

. . .

TEST NO. 3 – UNUSUAL CHARACTERISTICS TEST

Unusual characteristics include sites located in a state or federally designated floodplain or coastal high-hazard areas and sites subject to other similar requirements of law or code that require the lowest floor or the lowest structural member of the lowest floor be designed to a specified level at or above the base flood elevation. An accessible route to a building entrance is impractical due to unusual characteristics of the site when:

1. *The original site characteristics result in a difference in finished grade elevation exceeding 30 inches (762 mm) and 10 percent measured between an entrance and all vehicular or pedestrian arrival points within 50 feet (15 240 mm) of the planned entrance; or*

. . .

Division VII — FIGURES **(NOTE: FIGURES ATTACHED FOLLOWING EXPRESS TERMS)**

FIGURE 11A-1D – MINIMUM CLEAR WIDTH FOR TWO WHEELCHAIRS
Correct figure number of top right figure to "*FIGURE 11A-1F."*

FIGURE 11A-1I – FORWARD REACH
NOTE: X SHALL BE LESS THAN OR EQUAL TO 25 INCHES. Z SHALL BE GREATER THAN …

FIGURE 11A-1L – CORRIDOR OVER 200 FEET (60 960 mm)
Insert "feet" after "200" under top right graphic.

FIGURE 11A-2B – ~~DIAGONAL PARKING STALLS~~ SINGLE AND VAN ACCESSIBLE PARKING STALLS

FIGURE 11A-3E – CURB DETAIL
Complete description of retaining curb in middle of page to read "RETAINING CURB IF NECESSARY AT BACK OF SIDEWALK."

FIGURE 11A-3H/FIGURE 11A-3I* and *FIGURE 11A-3J/FIGURE 11A-3K.
Reverse order of pages to keep figures in correct sequence.

FIGURE 11A-6B – STAIR HANDRAILS
Delete extraneous reference to "18" MIN." between top two figures.

FIGURE 11A-7B – ELEVATOR CONTROL PANEL
Correct spelling of "numeral" at top of figure.

FIGURE 11A-8B – HINGE SIDE APPROPROACHES – SWINGING DOORS
Correct spelling of "swinging" in figure title.

NOTE:
Authority Cited: Health and Safety Code Sections 17040, 17050, 17920.9, 17921, 17921.3, 17921.6, 17921.10, 17922, 17922.6, 17922.12, 17927, 17928, 17959.6, 18300, 18552, 18554, 18620, 18630, 18640, 18670, 18690, 18691, 18865, 18871.3, 18871.4, 18873, 18873.1, 18873.2, 18873.3, 18873.4, 18873.5, 18938.3, 18944.11 and 19990; and Government Code Section 12955.1.

Reference: Health and Safety Code Sections 17000 through 17062.5, 17910 through 17995.5, 18200 through 18700, 18860 through 18874, and 19960 through 19997; and Government Code Sections 12955.1 and 12955.1.1.

---

12. HCD proposes to adopt Chapter 12 with amendments as follows:

CHAPTER 12

INTERIOR ENVIRONMENT

SECTION 1203
VENTILATION

1203.1 General. Buildings shall be provided with natural ventilation in accordance with Section 1203.4, or mechanical ventilation in accordance with the ~~*International*~~ *California Mechanical Code*.

1203.2.1 Openings into attic. Exterior openings into the attic space of any building intended for human occupancy shall be protected to prevent the entry of birds, squirrels, rodents, snakes and other similar creatures. Openings for ventilation having a least dimension of 1/16 inch (1.6 mm) minimum and 1/4 inch (6.4 mm) maximum shall be permitted. Openings for ventilation having a least dimension larger than 1/4 inch (6.4 mm) shall be provided with corrosion-resistant wire cloth screening, hardware cloth, perforated vinyl or similar material with openings having a least dimension of 1/16 inch (1.6 mm) minimum and 1/4 inch (6.4 mm) maximum. Where combustion air is obtained from an attic area, it shall be in accordance with Chapter 7 of the ~~*International*~~ *California Mechanical Code*.

1203.3.2 Exceptions. The following are exceptions to Sections 1203.3 and 1203.3.1:

1. Where warranted by climatic conditions, ventilation openings to the outdoors are not required if ventilation openings to the interior are provided.

. . .

4. Ventilation openings are not required when the ground surface is covered with a Class I vapor retarder, the perimeter walls are insulated and the space is conditioned in accordance with the ~~*International*~~ *California Energy* ~~*Conservation*~~ *Code, Title 24, Part 6*.

. . .

1203.4 Natural ventilation. Natural ventilation of an occupied space shall be through windows, doors, louvers or other openings to the outdoors. The operating mechanism for such openings shall be provided with ready access so that the openings are readily controllable by the building occupants.

. . .

[HCD 1] *The windows, doors, louvers or other approved closeable openings not required by Section ~~1026~~ 1029 may open into a passive solar energy collector for ventilation required by this section. The area of ventilation openings to the outside of the passive solar energy collector shall be increased to compensate for the openings required by the interior space.*

1203.4.2 Contaminants exhausted. Contaminant sources in naturally ventilated spaces shall be removed in accordance with the ~~*International*~~ *California Mechanical Code* and the *International Fire Code.*

1203.4.2.1 Bathrooms. Rooms containing bathtubs, showers, spas and similar bathing fixtures shall be mechanically ventilated in accordance with the ~~*International*~~ *California Mechanical Code*. *The minimum ventilation or exhaust rate shall not be less than that established by Table 4-4, Minimum Exhaust Rates. See California Mechanical Code for additional provisions related to environmental air ducts.*

1203.5 Other ventilation and exhaust systems. Ventilation and exhaust systems for occupancies and operations involving flammable or combustible hazards or other contaminant sources as covered in the ~~*International*~~ *California Mechanical Code* or the *International Fire Code* shall be provided as required by both codes.

SECTION 1205
LIGHTING

1205.1 General. Every space intended for human occupancy shall be provided with natural light by means of exterior glazed openings in accordance with Section 1205.2 or shall be provided with artificial light in accordance with Section 1205.3. Exterior glazed openings shall open directly onto a public way or onto a yard or court in accordance with Section 1206.
[HCD 1] *Glazed openings may open into a passive solar energy collector provided the area of exterior glazed openings in the passive solar energy collector is increased to compensate for the area required by the interior space.*

SECTION 1206
YARDS OR COURTS

1206.3.3 Court drainage. The bottom of every court shall be properly graded and drained to a public sewer or other approved disposal system complying with the ~~*International*~~ *California Plumbing Code*.

SECTION 1207
[HCD 1 & HCD 2] SOUND TRANSMISSION

~~**1207.1 Scope.** This section shall apply to common interior walls, partitions and floor/ceiling assemblies between adjacent dwelling units or between dwelling units and adjacent public areas such as halls, corridors, stairs or service areas.~~

~~**1207.2 Air-borne sound.** Walls, partitions and floor/ceiling assemblies separating dwelling units from each other or from public or service areas shall have a sound transmission class (STC) of not less than 50 (45 if field tested) for air-borne noise when tested in accordance with ASTM E 90. Penetrations or openings in construction assemblies for piping; electrical devices; recessed cabinets; bathtubs; soffits; or heating, ventilating or exhaust~~

~~ducts shall be sealed, lined, insulated or otherwise treated to maintain the required ratings. This requirement shall not apply to dwelling unit entrance doors; however, such doors shall be tight fitting to the frame and sill.~~

~~**1207.2.1 Masonry.** The sound transmission class of concrete masonry and clay masonry assemblies shall be calculated in accordance with TMS 0302 or determined through testing in accordance with ASTM 90.~~

~~**1207.3 Structure-borne sound.** Floor/ceiling assemblies between dwelling units or between a dwelling unit and a public or service area within the structure shall have an impact insulation class (IIC) rating of not less than 50 (45 if field tested) when tested in accordance with ASTM E 492.~~

1207.1 Purpose and scope. *The purpose of this section is to establish uniform minimum noise insulation performance standards to protect persons within hotels, motels, dormitories, apartment houses and dwellings other than detached single-family dwellings from the effects of excessive noise, including, but not limited to, hearing loss or impairment and interference with speech and sleep. This section shall apply to all buildings for which applications for building permits were made subsequent to August 22, 1974.*

. . .

1207.3 Relevant standards. *The current edition of the following standards is generally applicable for determining compliance with this section. Copies may be obtained from the American Society for Testing and Materials (ASTM) at 100 Barr Harbor Drive, West Conshohocken, PA, 19428-2959.*

ASTM C 634, Standard ~~Definitions~~ Terminology ~~of Terms~~ Relating to Building and Environmental Acoustics.

ASTM E 90, Standard Test Method for Laboratory Measurement of Airborne Sound Transmission Loss of Building Partitions and Elements.

ASTM E 336, Standard Test Method for Measurement of Airborne Sound ~~Insulation~~ Attenuation Between Rooms in Buildings.

ASTM E 413, ~~Standard~~ Classification for ~~Determination of~~ Rating Sound ~~Transmission Class~~ Insulation.

ASTM E 492, Standard Test Method ~~of~~ for Laboratory Measurement of Impact Sound Transmission Through Floor-Ceiling Assemblies Using the Tapping Machine.

ASTM E 497, Standard Recommended Practice for Installation of Fixed Partitions of Light Frame Type for the Purpose of Conserving Their Sound Insulation Efficiency.

ASTM E 597, Recommended Practice for Determining A Single-Number Rating of Airborne Sound Isolation in Multi-unit Building Specifications.

ASTM E 966, Standard Guide for Field Measurements of Airborne Sound Insulation of Building Facades and Facade Elements.
ASTM E 989, Standard Classification for Determination of Impact Insulation Class (IIC).

ASTM E 1007, Standard Test Method for Field Measurement of Tapping Machine Impact Sound Transmission Through Floor-Ceiling Assemblies and Associated Support Structures.

ASTM E 1014, Standard Guide for Measurement of Outdoor A-Weighted Sound Levels.

. . .

1207.9 Tested assemblies. *Laboratory-tested wall or floor-ceiling designs having STC or IIC ratings of 50 or more may be used by the building official to determine compliance with this section during the plan review phase. Field tests shall be required by the building official when evidence of sound leaks ~~of~~ or flanking paths is noted, or when the separating assembly is not built according to the approved design.*

Generic sound transmission control systems as listed in the Catalog of STC and IIC Ratings for Wall and Floor-Ceiling Assemblies, as published by the Office of Noise Control, California Department of Health Services, or the Fire Resistance Design Manual, as published by the Gypsum Association, may be used to evaluate construction assemblies for their sound transmission properties. Other tests from recognized laboratories may also be used. When ratings for essentially similar assemblies differ, and when ratings are below STC or ~~ICC~~ IIC 50, field testing may be used to demonstrate that the building complies with this section.

. . .

1207.11 Exterior sound transmission control.

1207.11.1 Application*. Consistent with local land-use standards, residential structures located in noise critical areas, such as proximity to highways, county roads, city streets, railroads, rapid transit lines, airports or industrial areas, shall be designed to prevent the intrusion of exterior noises beyond prescribed levels. Proper design shall include, but shall not be limited to, orientation of the residential structure, setbacks, shielding and sound insulation of the building itself.*

. . .

1207.11.3 Airport noise sources. *Residential structures to be located where the annual Ldn or CNEL (as defined in Title 21, Division 2.5, Chapter 6, Article 1, Section 5001, ~~Subchapter 6,~~ California Code of Regulations) exceeds 60 db shall require an acoustical analysis showing that the proposed design will achieve prescribed allowable interior level. For public-use airports or heliports, the Ldn or CNEL shall be determined from the airport land-use plan prepared by the county wherein the airport is located. For military bases, the Ldn shall be determined from the facility Air Installation Compatible Use Zone (AICUZ) plan. For all other airports or heliports, or public-use airports or heliports for which a land-use plan has not been developed, the Ldn or CNEL shall be determined from the noise element of the general plan of the local jurisdiction.*

When aircraft noise is not the only significant source, noise levels from all sources shall be added to determine the composite site noise level.

. . .

SECTION 1208
INTERIOR SPACE DIMENSIONS

1208.4 Efficiency dwelling units. ~~An efficiency living unit shall conform to the requirements of the code except as modified herein:~~ ***[HCD 1]*** *Unless modified by local ordinance pursuant to Health and Safety Code Section 17958.1, efficiency dwelling units shall comply with the following:*

1. The unit shall have a living room of not less than 220 square feet (20.4 m^2) of floor area. An additional 100 square feet (9.3 m^2) of floor area shall be provided for each occupant of such unit in excess of two.

. . .

SECTION 1209
ACCESS TO UNOCCUPIED SPACES

1209.3 Mechanical appliances. Access to mechanical appliances installed in under-floor areas, in attic spaces and on roofs or elevated structures shall be in accordance with the ~~*International*~~ *California Mechanical Code*.

SECTION 1210
SURROUNDING MATERIALS

1210.2 Walls and partitions. Walls and partitions within 2 feet (610 mm) of urinals and water closets shall have a smooth, hard, nonabsorbent surface, to a height of 4 feet (1219 mm) above the floor, and except for structural elements, the materials used in such walls shall be of a type that is not adversely affected by moisture.

Exceptions:

1. Dwelling units and sleeping units.
2. Toilet rooms that are not accessible to the public and which have not more than one water closet.

Accessories such as grab bars, towel bars, paper dispensers and soap dishes, provided on or within walls, shall be installed and sealed to protect structural elements from moisture. ~~For walls and partitions also see Section 2903.~~

SECTION 1211 [HCD 1 & HCD 2]
GARAGE DOOR SPRINGS

Section 1211.1 General. *This section shall apply to applications listed in Sections ~~108.2.1.1~~ 1.8.2.1.1 and ~~108.2.1.3~~ 1.8.2.1.3 regulated by the Department of Housing and Community Development.*

1211.1.1 Extension garage door springs. *Every extension garage door spring sold or offered for sale, whether new or as a replacement, or installed in any garage or carport which is accessory to an apartment house, hotel, motel or dwelling shall conform to the following requirements:*
Hard-drawn spring wire shall conform to ASTM A 227-71 or a more current version, and shall be made by the steel processes described therein, conforming to the chemical composition requirements listed and meeting the standards of steel heat as set forth by the ladle analysis. Wire tensile strength and dimension variations shall meet the prescribed properties of established standards.

Oil-tempered wire shall conform to ASTM A 229 -71 or a more current version, and shall be made by the steel processes described therein, conforming to the chemical composition requirements listed and meeting the standards of steel heat as set forth by the ladle analysis. Wire tensile strength and dimension variations shall meet the prescribed properties of established standards.

Extension springs shall be fabricated from either hard-drawn spring wire or oil-tempered wire as specified above.

1211.2 Design standards. ***~~[HCD 1 & HCD 2]~~*** *Minimum design standard shall be 9,000 cycles. (One cycle is equal to door opening plus door closing at maximum working load.)*

1211.3 Certification. ***~~[HCD 1 & HCD 2]~~***

Mill certification of wire physical tests and chemical properties shall be kept on file by the spring manufacturer.

Physical cycling tests shall be performed for each extension spring design and shall be certified by an approved testing agency acceptable to the department and reports kept on file by the manufacturer.

Containment devices shall be physically tested for each extension spring design by installing the device on the spring and by destroying the spring at maximum recommended stretch. Containment tests shall be certified by an approved testing agency acceptable to the department and reports kept on file by the manufacturer.

1211.4 Containment devices. ***~~[HCD 1 & HCD 2]~~*** *Each extension spring shall be equipped with an approved device capable of restraining the spring or any part thereof in the event it breaks.*

1211.5 Identification. ***~~[HCD 1 & HCD 2]~~*** *Extension s~~S~~prings shall be permanently identified as to manufacturer and also to indicate maximum recommended stretch. Both extension springs and containment devices shall bear information stating that they have been manufactured in accordance with requirements of the California Department of Housing and Community Development.*

1211.6 Installation. ***~~[HCD 1 & HCD 2]~~*** *Installation of extension springs, containment devices and hardware shall be in accordance with the manufacturer's installation instructions. Instructions shall be provided by the manufacturer and shall specify the approved method of restraint and maximum recommended stretch. Unless otherwise permitted by the manufacturer's installation instructions, the hardware and extension springs shall be mounted to nominal 12 by 6 framing members which shall be of a species identified as Group I or II in Volume 3, Chapter 23, Division III.*

NOTE:
Authority Cited: Health and Safety Code Sections 17040, 17050, 17920.9, 17921, 17921.3, 17921.6, 17921.10, 17922, 17922.6, 17922.12, 17927, 17928, 17959.6, 18300, 18552, 18554, 18620, 18630, 18640, 18670, 18690, 18691, 18865, 18871.3, 18871.4, 18873, 18873.1, 18873.2, 18873.3, 18873.4, 18873.5, 18938.3, 18944.11 and 19990; and Government Code Section 12955.1.

Reference: Health and Safety Code Sections 17000 through 17062.5, 17910 through 17995.5, 18200 through 18700, 18860 through 18874, and 19960 through 19997; and Government Code Sections 12955.1 and 12955.1.1.

13. HCD proposes to not adopt Chapter 13 and remove it from the printed California Building Code.

CHAPTER 13

ENERGY EFFICIENCY

NOTE:
Authority Cited: Health and Safety Code Sections 17040, 17050, 17920.9, 17921, 17921.3, 17921.6, 17921.10, 17922, 17922.6, 17922.12, 17927, 17928, 17959.6, 18300, 18552, 18554, 18620, 18630, 18640, 18670, 18690, 18691, 18865, 18871.3, 18871.4, 18873, 18873.1, 18873.2, 18873.3, 18873.4, 18873.5, 18938.3, 18944.11, and 19990; and Government Code Section 12955.1.

Reference: Health and Safety Code Sections 17000 through 17062.5, 17910 through 17995.5, 18200 through 18700, 18860 through 18874, and 19960 through 19997; and Government Code Sections 12955.1 and 12955.1.1.

---

14. HCD proposes to adopt Chapter 14 with amendments as follows:

CHAPTER 14

EXTERIOR WALLS

SECTION 1405
INSTALLATION OF WALL COVERINGS

1405.3 Vapor retarders. Vapor retarders. Class I or II vapor retarders shall be provided on the interior side of frame walls in Zones 5, 6, 7, 8 and Marine 4.

[HCD 1 & HCD 2] *Class I or II vapor retarders shall be provided on the interior side of frame walls of low-rise residential buildings as required in Title 24, Part 6, the California Energy Code (see "vapor barriers" and definition of "Low-rise residential building").*

Exceptions:

1. Basement walls.
2. Below-grade portion of any wall.
3. Construction where moisture or its freezing will not damage the materials.

1405.3.1 Class III vapor retarders. Class III vapor retarders shall be permitted where any one of the conditions in Table 1405.3.1 is met.

[HCD 1 & HCD 2] *Class III vapor retarders shall be permitted where any one of the conditions in Items 1, 2 or 3 below are met. This section shall apply to "Low-rise residential buildings" as defined in Title 24, Part 6, the California Energy Code.*

1. Vented cladding over fiberboard.

2. Vented cladding over gypsum.

3. Insulated sheathing with R-value ≥ R4.

Spray foam with a minimum density of 2 lbs/ft^3 applied to the interior cavity side of OSB, plywood, fiberboard, insulating sheathing or gypsum is deemed to meet the insulating sheathing requirement where the spray foam R-value meets or exceeds the specified insulating sheathing R-value.

TABLE 1405.3.1 ***[Not adopted by HCD 1 & HCD 2]***
CLASS III VAPOR RETARDERS

ZONE	CLASS III VAPOR RETARDERS PERMITTED FOR:[a]
Marine 4	Vented cladding over OSB Vented cladding over plywood Vented cladding over fiberboard Vented cladding over gypsum Insulated sheathing with *R*-value ≥ R2.5 over 2×4 wall Insulated sheathing with *R*-value ≥ R3.75 over 2×6 wall
5	Vented cladding over OSB Vented cladding over plywood Vented cladding over fiberboard Vented cladding over gypsum Insulated sheathing with *R*-value ≥ R5 over 2×4 wall Insulated sheathing with *R*-value ≥ R7.5 over 2×6 wall
6	Vented cladding over fiberboard Vented cladding over gypsum
	Insulated sheathing with *R*-value ≥ R7.5 over 2×4 wall
	Insulated sheathing with *R*-value ≥ R11.25 over 2×6 wall
7 and 8	Insulated sheathing with *R* value ≥ R10 over 2×4 wall Insulated sheathing with *R* value ≥ R15 over 2×6 wall

For SI: 1 pound per cubic foot = 16 kg/m^3.

a. Spray foam with a minimum density of 2 lbs/ft^3 applied to the interior cavity side of OSB, plywood, fiberboard, insulating sheathing or gypsum is deemed to meet the insulating sheathing requirement where the spray foam R-value meets or exceeds the specified insulating sheathing R-value.

MATRIX ADOPTION TABLE NOTATION:
The ♦ designation indicates that the State Fire Marshal's adoption of this chapter is applicable to structures subject to HCD 1 and HCD 2.

NOTE:
Authority Cited: Health and Safety Code Sections 17040, 17050, 17920.9, 17921, 17921.3, 17921.6, 17921.10, 17922, 17922.6, 17922.12, 17927, 17928, 17959.6, 18300, 18552, 18554, 18620, 18630, 18640, 18670, 18690, 18691, 18865, 18871.3, 18871.4, 18873, 18873.1, 18873.2, 18873.3, 18873.4, 18873.5, 18938.3, 18944.11, and 19990; and Government Code Section 12955.1.

Reference: Health and Safety Code Sections 17000 through 17062.5, 17910 through 17995.5, 18200 through 18700, 18860 through 18874, and 19960 through 19997; and Government Code Sections 12955.1 and 12955.1.1.

15. HCD proposes to adopt Chapter 15 with amendments as follows:

CHAPTER 15

ROOF ASSEMBLIES AND ROOFTOP STRUCTURES

MATRIX ADOPTION TABLE NOTATION:
The ♦ designation indicates that the State Fire Marshal's adoption of this chapter is applicable to structures subject to HCD 1 and HCD 2.

SECTION 1503 WEATHER PROTECTION

1503.4 Roof Drainage. Design and installation of roof drainage systems shall comply with Section 1503 and the ~~*International*~~ *California Plumbing Code*.

NOTE:
Authority Cited: Health and Safety Code Sections 17040, 17050, 17920.9, 17921, 17921.3, 17921.6, 17921.10, 17922, 17922.6, 17922.12, 17927, 17928, 17959.6, 18300, 18552, 18554, 18620, 18630, 18640, 18670, 18690, 18691, 18865, 18871.3, 18871.4, 18873, 18873.1, 18873.2, 18873.3, 18873.4, 18873.5, 18938.3, 18944.11, and 19990; and Government Code Section 12955.1.

Reference: Health and Safety Code Sections 17000 through 17062.5, 17910 through 17995.5, 18200 through 18700, 18860 through 18874, and 19960 through 19997; and Government Code Sections 12955.1 and 12955.1.1.

---

16. HCD proposes to adopt Chapter 16 with amendments as follows:

CHAPTER 16

STRUCTURAL DESIGN

MATRIX ADOPTION TABLE NOTATION:
The ♦ designation indicates that the State Fire Marshal's adoption of this chapter is applicable to structures subject to HCD 1 and HCD 2.

SECTION 1609
WIND LOADS

1609.1.1 Determination of wind loads. Wind loads on every building or structure shall be determined in accordance with Chapter 6 of ASCE 7 or provisions of the alternate all-heights method in accordance in Section 1609.6. ~~*[HCD 1 & HCD 2] or provisions of the Alternate All-heights Method in Section 1609.6.*~~ The type of opening protection required, the basic wind speed and the exposure category for a site is permitted to be determined in accordance with Section 1609 or ASCE 7. Wind shall be assumed to come from any horizontal direction and wind pressures shall be assumed to act normal to the surface considered.

Exceptions:

1. Subject to the limitations of Section 1609.1.1.1, the provisions of ICC-600 shall be permitted for applicable Group R-2 and R-3 buildings.

. . .

~~***1609.6 [HCD 1 & HCD 2] Alternate all-heights method.*** *The alternate wind design provisions in this section are simplifications of the ASCE 7 Method 2-Analytical Procedure.*~~

~~***1609.6.1 Scope.*** *As an alternate to ASCE 7 Section 6.5, the following provisions are permitted to be used to determine the wind effects on regularly shaped buildings, or other structures which meet all of the following conditions:*~~

1. ~~*The building or other structure is less than or equal to 75 feet height having height to least width ratio of 4 or less, or the building or other structure has a fundamental frequency greater than or equal to 1 hertz.*~~
2. ~~*The building or other structure is not sensitive to dynamic effects.*~~
3. ~~*The building or other structure is not located on a site for which channeling effects or buffeting in the wake of upwind obstructions warrant special consideration.*~~
4. ~~*The building shall meet the requirements of a simple diaphragm building as defined in ASCE 7 Section 6.2.*~~

~~***1609.6.1.1 Modifications****. The following modifications shall be made to certain subsections in ASCE 7: Section 1609.6.2 Symbols and Notations that are specific to this section are used in conjunction with the Symbols and Notations in ASCE 7 Section 6.3.*~~

~~**1609.6.2 Symbols and notations.** Coefficients and variables used in the Alternate All-Heights Method equations are as follows:~~

~~C_{net} = net pressure coefficient based on K_d [(G) (C_p) – (GC_{pi})], Ref. Table 1609.6.2(2)~~
~~G = Gust effect factor equal to 0.85 for rigid structures per ASCE 7 Section 6.5.8.1.~~
~~K_d = Wind directionality factor per ASCE 7 Table 6-4.~~
~~P_{net} = Design wind pressure to be used in determination of wind loads on buildings or other structures or their components and cladding, in lb/ft^2 (N/m^2).~~
~~q_s = Wind velocity pressure in lb/ft^2 (N/m^2). (Per Table 1609.6.2(1))~~

~~**1609.6.3 Design equations.** When using the Alternate All-Heights Method, the Main Wind-Force-Resisting System (MWFRS), and Components and Cladding of every structure shall be designed to resist the effects of wind pressures on the building envelope in accordance with Equation (16-36).~~

~~$P_{net} = q_s K_z C_{net} [I K_{zt}]$ (Equation 16-36)~~

~~Design wind forces for the MWFRS shall not be less than 10 lb/ft^2 (0.48 KN/m^2) multiplied by the area of the structure projected on a plane normal to the assumed wind direction. See ASCE 7 Section 6.1.4 for criteria. Design net wind pressure for components and cladding shall not be less than 10 lb/ft^2 (0.48 KN/m^2) acting in either direction normal to the surface.~~

~~**1609.6.4 Design procedure.** The MWFRS and the components and cladding of every building or other structure shall be designed for the pressures calculated using Equation (16-36).~~

~~**1609.6.4.1 Main wind-force-resisting systems.** The MWFRS shall be investigated for the torsional effects identified in ASCE 7 Figure 6-9.~~
~~**1609.6.4.2 Determination of K_z and K_{zt}. velocity pressure exposure coefficient,** K_z, shall be determined in accordance with ASCE 7 Section 6.5.6.6 and the Topographic Factor, K_{zt} shall be determined in accordance with ASCE 7 Section 6.5.7.~~
~~1. For the windward side of a structure, K_{zt} and K_z shall be based on height z.~~
~~2. For leeward and side walls, and for windward and leeward roofs, K_{zt} and K_z shall be based on mean roof height h.~~
~~**1609.6.4.3 Determination of net pressure coefficients,** C_{net}. For the design of the Main Wind-Force-Resisting System and for Components and Cladding, the sum of the internal and external net pressure shall be based on the net pressure coefficient C_{net}.~~
~~1. The pressure coefficient, C_{net}, for walls and roofs shall be determined from Table 1609.6.2(2).~~
~~2. Where C_{net} may have more than one value, the more severe wind load combination shall be used for design.~~
~~**1609.6.4.4 Application of wind pressures**. When using the Alternate All-Heights Method, wind pressures shall be applied simultaneously on, and in a direction normal to, all building envelope wall and roof surfaces.~~
~~**1609.6.4.4.1 Components and cladding.** Wind pressure for each component or cladding element is applied as follows using C_{net} values based on the effective wind area, A, contained within the zones in areas of discontinuity of width and/or length "a", "2a" or "4a" at: corners of roofs and walls; edge strips for ridges, rakes and eaves; or field areas on walls or roofs as indicated in Figures in Table 1609.6.2(2) in accordance with the following:~~

~~1. Calculated pressures at local discontinuities acting over specific edge strips or corner boundary areas.~~
~~2. Include "field" (zone 1, 2 or 4, as applicable) pressures applied to areas beyond the boundaries of the areas of discontinuity.~~
~~3. Where applicable, the calculated pressures at discontinuities (Zones 2 or 3) shall be combined with design pressures that apply specifically on rakes or eave overhangs.~~

~~**TABLE 1609.6.2(1)**~~
~~**WIND VELOCITY PRESSURE (q_s) AT STANDARD HEIGHT OF 33 FEET**[a,b,c]~~

~~**BASIC WIND SPEED, V (mph)**~~	~~85~~	~~90~~	~~100~~	~~105~~	~~110~~	~~120~~	~~125~~	~~130~~	~~140~~	~~150~~	~~160~~	~~170~~
~~**PRESSURE, q_s (psf)**~~	~~18.5~~	~~20.7~~	~~25.6~~	~~28.2~~	~~31.0~~	~~36.9~~	~~40.0~~	~~43.3~~	~~50.2~~	~~57.6~~	~~65.5~~	~~74.0~~

~~a. For wind speeds not shown, use $q_s = 0.00256 V^2$~~
~~b. Multiply by 1.61 to convert to km/h~~

~~c. Multiply by 0.048 to convert to kN/m^2~~

~~TABLE 1609.6.2(2) – NET PRESSURE COEFFICIENTS, C_{net}[a,b,c]~~

~~STRUCTURE OR PART THEREOF~~	~~DESCRIPTION~~		~~C_{net} FACTOR~~		
~~1. Main Wind Force Resisting Frames and Systems~~	~~WALLS:~~		~~Enclosed~~	~~Partially Enclosed~~	
	~~Windward Wall~~		~~0.43~~	~~0.11~~	
	~~Leeward Wall~~		~~-0.51~~	~~-0.83~~	
	~~Side Wall~~		~~-0.66~~	~~-0.97~~	
	~~Parapet Wall~~	~~Windward~~	~~1.28~~	~~1.28~~	
		~~Leeward~~	~~-0.85~~	~~-0.85~~	
	~~ROOFS:~~		~~Enclosed~~	~~Partially Enclosed~~	
	~~Wind perpendicular to ridge~~				
	~~Leeward roof or flat roof~~		~~-0.66~~	~~-0.97~~	
	~~Windward roof slopes:~~				
	~~Slope < 2:12 (10°)~~	~~Case 1~~	~~-1.09~~	~~-1.41~~	
		~~Case 2~~	~~-0.28~~	~~-0.60~~	
	~~Slope = 4:12 (18°)~~	~~Case 1~~	~~-0.73~~	~~-1.04~~	
		~~Case 2~~	~~-0.05~~	~~-0.37~~	
	~~Slope = 5:12 (23°)~~	~~Case 1~~	~~-0.58~~	~~-0.90~~	
		~~Case 2~~	~~0.03~~	~~-0.29~~	
	~~Slope = 6:12 (27°)~~	~~Case 1~~	~~-0.47~~	~~-0.78~~	
		~~Case 2~~	~~0.06~~	~~-0.25~~	
	~~Slope = 7:12 (30°)~~	~~Case 1~~	~~-0.37~~	~~-0.68~~	
		~~Case 2~~	~~0.07~~	~~-0.25~~	
	~~Slope 9:12 (37°)~~	~~Case 1~~	~~-0.27~~	~~-0.58~~	
		~~Case 2~~	~~0.14~~	~~-0.18~~	
	~~Slope 12:12 (45°)~~		~~-0.15~~	~~-0.47~~	
	~~Wind parallel to ridge and flat roofs~~		~~-1.09~~	~~-1.41~~	
	~~Non building structures: chimneys, tanks and similar structures:~~				
			~~h/D~~		
			~~1~~	~~7~~	~~25~~
	~~Square (wind normal to face)~~		~~0.99~~	~~1.07~~	~~1.53~~
	~~Square (wind on diagonal)~~		~~0.77~~	~~0.84~~	~~1.15~~
	~~Hexagonal or Octagonal~~		~~0.81~~	~~0.97~~	~~1.13~~
	~~Round~~		~~0.65~~	~~0.81~~	~~0.97~~
	~~Open signs and lattice frameworks~~		~~Ratio of solid to gross area~~		
			~~< 0.1~~	~~0.1 to 0.29~~	~~0.3 to 0.7~~
	~~Flat~~		~~1.45~~	~~1.30~~	~~1.16~~
	~~Round~~		~~0.87~~	~~0.94~~	~~1.08~~

~~2. Components and Cladding not in areas of discontinuity – Roofs and overhangs~~	~~Roof elements and slopes~~		~~Enclosed~~	~~Partially Enclosed~~
	~~Gable or hipped configurations (Zone 1)~~			
	~~Flat < slope < 6:12 (27°)~~			
	~~Positive~~	~~10 SF or less~~	~~0.58~~	~~0.89~~
		~~100 SF or more~~	~~0.41~~	~~0.72~~
	~~Negative~~	~~10 SF or less~~	~~-1.00~~	~~-1.32~~
		~~100 SF or more~~	~~-0.92~~	~~-1.23~~
	~~Overhang: flat < slope < 6:12 (27°)~~			
	~~Negative~~	~~10 SF or less~~	~~-1.45~~	
		~~100 SF or more~~	~~-1.36~~	
		~~500 SF or more~~	~~-0.94~~	
	~~6:12 (27°) < slope < 12:12 (45°)~~			
	~~Positive~~	~~10 SF or less~~	~~0.92~~	~~1.23~~
		~~100 SF or more~~	~~0.83~~	~~1.15~~
	~~Negative~~	~~10 SF or less~~	~~-1.00~~	~~-1.32~~
		~~100 SF or more~~	~~-0.83~~	~~-1.15~~
	~~Monosloped configurations (Zone 1)~~		~~Enclosed~~	~~Partially Enclosed~~
	~~Flat < slope < 7:12 (30°)~~			
	~~Positive~~	~~10 SF or less~~	~~0.49~~	~~0.81~~
		~~100 SF or more~~	~~0.41~~	~~0.72~~
	~~Negative~~	~~10 SF or less~~	~~-1.26~~	~~-1.57~~
		~~100 SF or more~~	~~-1.09~~	~~-1.40~~
	~~Tall flat topped roofs h> 60'~~		~~Enclosed~~	~~Partially Enclosed~~

	~~Flat <slope < 2:12 (10') (Zone 1)~~			
	~~Negative~~	~~10 SF or less~~	~~-1.34~~	~~-1.66~~
		~~500 SF or more~~	~~-1.00~~	~~-1.32~~
~~3. Components and Cladding in areas of discontinuities – Roofs and overhangs~~	~~Roof elements and slopes~~		~~Enclosed~~	~~Partially Enclosed~~
	~~Gable or hipped configurations at ridges, eaves and rakes (Zone 2)~~			
	~~Flat < Slope < 6:12 (27°)~~			
	~~Positive~~	~~10 SF or less~~	~~0.58~~	~~0.89~~
		~~100 SF or more~~	~~0.41~~	~~0.72~~
	~~Negative~~	~~10 SF or less~~	~~-1.68~~	~~-2.00~~
		~~100 SF or more~~	~~-1.17~~	~~-1.49~~
	~~Overhang for slope flat < slope < 6:12 (27°)~~			
	~~Negative~~	~~10 SF or less~~	~~-1.87~~	
		~~100 SF or more~~	~~-1.87~~	
	~~6:12 (27°) < slope < 12:12 (45°)~~		~~Enclosed~~	~~Partially Enclosed~~
	~~Positive~~	~~10 SF or less~~	~~0.92~~	~~1.23~~
		~~100 SF or more~~	~~0.83~~	~~1.15~~
	~~Negative~~	~~10 SF or less~~	~~-1.17~~	~~-1.49~~
		~~100 SF or more~~	~~-1.00~~	~~-1.32~~
	~~Overhang for 6:12 (27°) < slope < 12:12 (45°)~~			
	~~Negative~~	~~10 SF or less~~	~~-1.70~~	
		~~100 SF or more~~	~~-1.53~~	
	~~Monosloped configurations at ridges, eaves and rakes (Zone 2)~~			
	~~Flat < slope < 7:12 (30°)~~			
	~~Positive~~	~~10 SF or less~~	~~0.49~~	~~0.81~~
		~~100 SF or more~~	~~0.41~~	~~0.72~~
	~~Negative~~	~~10 SF or less~~	~~-1.51~~	~~-1.83~~

		~~100 SF or more~~	~~-1.43~~	~~-1.74~~
	~~Tall flat topped roofs h> 60'~~		~~Enclosed~~	~~Partially Enclosed~~
	~~Flat <slope < 2:12 (10°) (Zone 2)~~			
	~~Negative~~	~~10 SF or less~~	~~-2.11~~	~~-2.42~~
		~~500 SF or more~~	~~-1.51~~	~~-1.83~~
	~~Gable or hipped configurations at corners (Zone 3)~~			
	~~Flat < slope < 6:12 (27°)~~		~~Enclosed~~	~~Partially Enclosed~~
	~~Positive~~	~~10 SF or less~~	~~0.58~~	~~0.89~~
		~~100 SF or more~~	~~0.41~~	~~0.72~~
	~~Negative~~	~~10 SF or less~~	~~-2.53~~	~~-2.85~~
		~~100 SF or more~~	~~-1.85~~	~~-2.17~~
	~~Overhang for slope flat < slope < 6:12 (27°)~~			
	~~Negative~~	~~10 SF or less~~	~~-3.15~~	
		~~100 SF or more~~	~~-2.13~~	
	~~6:12 (27°) < slope < 12:12 (45°)~~			
	~~Positive~~	~~10 SF or less~~	~~0.92~~	~~1.23~~
		~~100 SF or more~~	~~0.83~~	~~1.15~~
	~~Negative~~	~~10 SF or less~~	~~-1.17~~	~~-1.49~~
		~~100 SF or more~~	~~-1.00~~	~~-1.32~~
	~~Overhang for 6:12 (27°) < slope < 12:12 (45°)~~			
	~~Negative~~	~~10 SF or less~~	~~-1.70~~	
		~~100 SF or more~~	~~-1.53~~	
	~~Monosloped configurations at corners (Zone 3)~~			
	~~Flat < slope < 7:12 (30°)~~			
	~~Positive~~	~~10 SF or less~~	~~0.49~~	~~0.81~~
		~~100 SF or more~~	~~0.41~~	~~0.72~~

	~~Negative~~	~~10 SF or less~~	~~-2.62~~	~~-2.93~~
		~~100 SF or more~~	~~-1.85~~	~~-2.17~~
	~~Tall flat topped roofs h> 60'~~		~~Enclosed~~	~~Partially Enclosed~~
	~~Flat <slope < 2:12 (10°) (Zone 3)~~			
	~~Negative~~	~~10 SF or less~~	~~-2.87~~	~~-3.19~~
		~~500 SF or more~~	~~-2.11~~	~~-2.42~~
~~4. Components and Cladding not in areas of discontinuity – Walls and parapets~~	~~Wall elements: h ≤ 60' (Zone 4)~~		~~Enclosed~~	~~Partially Enclosed~~
	~~Positive~~	~~10 SF or less~~	~~1.00~~	~~1.32~~
		~~500 SF or more~~	~~0.75~~	~~1.06~~
	~~Negative~~	~~10 SF or less~~	~~-1.09~~	~~-1.40~~
		~~500 SF or more~~	~~-0.83~~	~~-1.15~~
	~~Wall elements: h > 60' (Zone 4)~~			
	~~Positive~~	~~20 SF or less~~	~~0.92~~	~~1.23~~
		~~500 SF or more~~	~~0.66~~	~~0.98~~
	~~Negative~~	~~20 SF or less~~	~~-0.92~~	~~-1.23~~
		~~500 SF or more~~	~~-0.75~~	~~-1.06~~
	~~Parapet walls~~			
	~~Positive~~		~~2.87~~	~~3.19~~
	~~Negative~~		~~-1.68~~	~~-2.00~~
~~5. Components and Cladding in areas of discontinuity - Walls and parapets~~	~~Wall elements: h ≤ 60' (Zone 5)~~		~~Enclosed~~	~~Partially Enclosed~~
	~~Positive~~	~~10 SF or less~~	~~1.00~~	~~1.32~~
		~~500 SF or more~~	~~0.75~~	~~1.06~~
	~~Negative~~	~~10 SF or less~~	~~-1.34~~	~~-1.66~~
		~~500 SF or more~~	~~-0.83~~	~~-1.05~~
	~~Wall elements: h > 60' (Zone 5)~~			
	~~Positive~~	~~20 SF or less~~	~~0.92~~	~~1.23~~

		~~500 SF or more~~	~~0.66~~	~~0.98~~
	~~Negative~~	~~20 SF or less~~	~~-1.68~~	~~-2.00~~
		~~500 SF or more~~	~~-1.00~~	~~-1.32~~
	~~Parapet walls~~			
	~~Positive~~		~~3.64~~	~~3.95~~
	~~Negative~~		~~-2.45~~	~~-2.76~~

~~a. Linear interpolation between values in the table is acceptable.~~
~~b. For open buildings, multispan gable roofs, stepped roofs, sawtooth roofs, domed roofs, solid free standing walls and solid signs apply ASCE 7.~~
~~c. Some C_{net} values have been grouped together. Less conservative results may be obtained by applying ASCE 7.~~

NOTE:
Authority Cited: Health and Safety Code Sections 17040, 17050, 17920.9, 17921, 17921.3, 17921.6, 17921.10, 17922, 17922.6, 17922.12, 17927, 17928, 17959.6, 18300, 18552, 18554, 18620, 18630, 18640, 18670, 18690, 18691, 18865, 18871.3, 18871.4, 18873, 18873.1, 18873.2, 18873.3, 18873.4, 18873.5, 18938.3, 18944.11 and 19990; and Government Code Section 12955.1.

Reference: Health and Safety Code Sections 17000 through 17062.5, 17910 through 17995.5, 18200 through 18700, 18860 through 18874, and 19960 through 19997; and Government Code Sections 12955.1 and 12955.1.1.

17. HCD proposes to adopt Chapter 17 with prior amendments brought forward.

CHAPTER 17

STRUCTURAL TESTS AND SPECIAL INSPECTIONS

MATRIX ADOPTION TABLE NOTATION:
The ♦ designation indicates that the State Fire Marshal's adoption of this chapter is applicable to structures subject to HCD 1 and HCD 2.

NOTE:
Authority Cited: Health and Safety Code Sections 17040, 17050, 17920.9, 17921, 17921.3, 17921.6, 17921.10, 17922, 17922.6, 17922.12, 17927, 17928, 17959.6, 18300, 18552, 18554, 18620, 18630, 18640, 18670, 18690, 18691, 18865, 18871.3, 18871.4, 18873, 18873.1, 18873.2, 18873.3, 18873.4, 18873.5, 18938.3, 18944.11 and 19990; and Government Code Section 12955.1.

Reference: Health and Safety Code Sections 17000 through 17062.5, 17910 through 17995.5, 18200 through 18700, 18860 through 18874, and 19960 through 19997; and Government Code Sections 12955.1 and 12955.1.1.

18. HCD proposes to adopt Chapter 18 with amendments as follows:

CHAPTER 18

SOILS AND FOUNDATIONS

SECTION 1803
GEOTECHNICAL INVESTIGATIONS

1803.1 General. Geotechnical investigations shall be conducted in accordance with Section 1803.2 and reported in accordance with Section 1803.6. Where required by the building official, or where geotechnical investigations involve in-situ testing, laboratory testing or engineering calculations, such investigations shall be conducted by a registered design professional.

~~1802.1.1~~ 1803.1.1 General and where required for applications listed in Section ~~108.2.1.1~~ 1.8.2.1.1 regulated by the Department of Housing and Community Development. [HCD 1] *Foundation and soils investigations shall be conducted in conformance with Health and Safety Code Sections 17953 through 17955 as summarized below.*

~~1802.1.1.1~~ 1803.1.1.1 Preliminary soil report. *Each city, county, or city and county shall enact an ordinance which requires a preliminary soil report, prepared by a civil engineer who is registered by the state. The report shall be based upon adequate test borings or excavations, of every subdivision, where a tentative and final map is required pursuant to Section 66426 of the Government Code.*

The preliminary soil report may be waived if the building department of the city, county or city and county, or other enforcement agency charged with the administration and enforcement of the provisions of this part, shall determine that, due to the knowledge such department has as to the soil qualities of the soil of the subdivision or lot, no preliminary analysis is necessary.

~~1802.1.1.2~~ 1802.1.1.2 Soil investigation by lot, necessity, preparation, and recommendations. *If the preliminary soil report indicates the presence of critically expansive soils or other soil problems which, if not corrected, would lead to structural defects, such ordinance shall require a soil investigation of each lot in the subdivision.*

The soil investigation shall be prepared by a civil engineer who is registered in this state. It shall recommend corrective action which is likely to prevent structural damage to each dwelling proposed to be constructed on the expansive soil.

~~1802.1.1.3~~ 1803.1.1.3 Approval, building permit conditions, appeal. *The building department of each city, county or city and county, or other enforcement agency charged with the administration and enforcement of the provisions of this part, shall approve the soil investigation if it determines that the recommended action is likely to prevent structural damage to each dwelling to be constructed. As a condition to the building permit, the ordinance shall require that the approved recommended action be incorporated in the construction of each dwelling. Appeal from such determination shall be to the local appeals board.*

SECTION 1805
DAMPPROOFING AND WATERPROOFING

1805.4.3 Drainage discharge. The floor base and foundation perimeter drain shall discharge by gravity or mechanical means into an approved drainage system that complies with the ~~*International*~~ *California Plumbing Code*.

Exception: Where a site is located in well-drained gravel or sand/gravel mixture soils, a dedicated drainage system is not required.

NOTE:
Authority Cited: Health and Safety Code Sections 17040, 17050, 17920.9, 17921, 17921.3, 17921.6, 17921.10, 17922, 17922.6, 17922.12, 17927, 17928, 17959.6, 18300, 18552, 18554, 18620, 18630, 18640, 18670, 18690, 18691, 18865, 18871.3, 18871.4, 18873, 18873.1, 18873.2, 18873.3, 18873.4, 18873.5, 18938.3, 18944.11, and 19990; and Government Code Section 12955.1.

Reference: Health and Safety Code Sections 17000 through 17062.5, 17910 through 17995.5, 18200 through 18700, 18860 through 18874, and 19960 through 19997; and Government Code Sections 12955.1 and 12955.1.1.

19. HCD proposes to adopt Chapter 19 with amendments as follows:

CHAPTER 19

CONCRETE

SECTION 1908
MODIFICATIONS TO ACI 318

NOTE: Italics in model code showing differences from ACI 318 have been removed to differentiate proposed California amendments from model code language.

1908.1.2 ACI 318, Section 21.1.1. Modify ACI 318 Sections 21.1.1.3 and 21.1.1.7 to read as follows:
21.1.1.3 – Structures assigned to Seismic Design Category A shall satisfy requirements of Chapters 1 to 19 and 22; Chapter 21 does not apply. Structures assigned to Seismic Design Category B, C, D, E or F also shall satisfy 21.1.1.4 through 21.1.1.8, as applicable. Except for structural elements of plain concrete complying with Section 1908.1.8 of the ~~*International*~~ *California Building Code*, structural elements of plain concrete are prohibited in structures assigned to Seismic Design Category C, D, E or F.
. . .

1908.1.6 ACI 318, Section 21.12.1.1. Modify ACI 318, Section 21.12.1.1, to read as follows:
21.12.1.1 – Foundations resisting earthquake-induced forces or transferring earthquake-induced forces between a structure and ground shall comply with the requirements of Section 21.12 and other applicable provisions of ACI 318 unless modified by Chapter 18 of the ~~*International*~~ *California Building Code*.

NOTE:
Authority Cited: Health and Safety Code Sections 17040, 17050, 17920.9, 17921, 17921.3, 17921.6, 17921.10, 17922, 17922.6, 17922.12, 17927, 17928, 17959.6, 18300, 18552, 18554, 18620, 18630, 18640, 18670, 18690, 18691, 18865, 18871.3, 18871.4, 18873, 18873.1, 18873.2, 18873.3, 18873.4, 18873.5, 18938.3, 18944.11, and 19990; and Government Code Section 12955.1.

Reference: Health and Safety Code Sections 17000 through 17062.5, 17910 through 17995.5, 18200 through 18700, 18860 through 18874, and 19960 through 19997; and Government Code Sections 12955.1 and 12955.1.1.

20. HCD proposes to adopt Chapter 20 without amendment:

CHAPTER 20

ALUMINUM

NOTE:
Authority Cited: Health and Safety Code Sections 17040, 17050, 17920.9, 17921, 17921.3, 17921.6, 17921.10, 17922, 17922.6, 17922.12, 17927, 17928, 17959.6, 18300, 18552, 18554, 18620, 18630, 18640, 18670, 18690, 18691, 18865, 18871.3, 18871.4, 18873, 18873.1, 18873.2, 18873.3, 18873.4, 18873.5, 18938.3, 18944.11 and 19990; and Government Code Section 12955.1.

Reference: Health and Safety Code Sections 17000 through 17062.5, 17910 through 17995.5, 18200 through 18700, 18860 through 18874, and 19960 through 19997; and Government Code Sections 12955.1 and 12955.1.1.

21. HCD proposes to adopt Chapter 21 with amendments as follows:

CHAPTER 21

MASONRY

SECTION 2113
MASONRY CHIMNEYS

2113.11.1.2 Gas appliances. Flue lining systems for gas appliances shall be in accordance with the ~~*International Fuel Gas*~~ *California Mechanical Code*.

2113.15 Flue area (appliance). Chimney flues shall not be smaller in area than the area of the connector from the appliance. Chimney flues connected to more than one appliance shall not be less than the area of the largest connector plus 50 percent of the areas of additional chimney connectors.

Exceptions:

1. Chimney flues serving oil-fired appliances sized in accordance with NFPA 31.

2. Chimney flues serving gas-fired appliances sized in accordance with the ~~*International Fuel Gas*~~ *California Mechanical Code*.

NOTE:
Authority Cited: Health and Safety Code Sections 17040, 17050, 17920.9, 17921, 17921.3, 17921.6, 17921.10, 17922, 17922.6, 17922.12, 17927, 17928, 17959.6, 18300, 18552, 18554, 18620, 18630, 18640, 18670, 18690, 18691, 18865, 18871.3, 18871.4, 18873, 18873.1, 18873.2, 18873.3, 18873.4, 18873.5, 18938.3, 18944.11 and 19990; and Government Code Section 12955.1.

Reference: Health and Safety Code Sections 17000 through 17062.5, Sections 17910 through 17995.5, Sections 18200 through 18700, Sections 18860 through 18874, and Sections 19960 through 19997; and Government Code Sections 12955.1 and 12955.1.1.

---

22. HCD proposes to adopt Chapter 22 without amendment:

CHAPTER 22

STEEL

NOTE:
Authority Cited: Health and Safety Code Sections 17040, 17050, 17920.9, 17921, 17921.3, 17921.6, 17921.10, 17922, 17922.6, 17922.12, 17927, 17928, 17959.6, 18300, 18552, 18554, 18620, 18630, 18640, 18670, 18690, 18691, 18865, 18871.3, 18871.4, 18873, 18873.1, 18873.2, 18873.3, 18873.4, 18873.5, 18938.3, 18944.11 and 19990; and Government Code Section 12955.1.

Reference: Health and Safety Code Sections 17000 through 17062.5, 17910 through 17995.5, 18200 through 18700, 18860 through 18874, and 19960 through 19997; and Government Code Sections 12955.1 and 12955.1.1.

---

23. HCD proposes to adopt Chapter 23 with amendments as follows:

CHAPTER 23

WOOD

SECTION 2304
GENERAL CONSTRUCTION REQUIREMENTS

2304.2 Size of structural members. Computations to determine the required sizes of members shall be based on the net dimensions (actual sizes) and not nominal sizes.

~~*[HCD 1] For limited density owner-built rural dwellings, owner-produced or used materials and appliances may be utilized unless found not to be of sufficient strength or durability to perform the intended function; owner-produced or used lumber, or shakes and shingles may be utilized unless found to contain dry rot, excessive splitting or other defects obviously rendering the material unfit in strength or durability for the intended purpose.*~~

2304.5 Framing around flues and chimneys. Combustible framing shall be a minimum of 2 inches (51 mm), but shall not be less than the distance specified in Sections 2111 and 2113 and the ~~*International*~~ *California Mechanical Code*, from flues, chimneys and fireplaces, and 6 inches (152 mm) away from flue openings.

SECTION 2308
CONVENTIONAL LIGHT-FRAME CONSTRUCTION

2308.1 General. The requirements of this section are intended for conventional light-frame construction. Other methods are permitted to be used, provided a satisfactory design is submitted showing compliance with other provisions of this code. Interior nonload-bearing partitions, ceilings and curtain walls of conventional light-frame construction are not subject to the limitations of this section. Alternatively, compliance with AF&PA WFCM shall be permitted subject to the limitations therein and the limitations of this code. Detached one- and two-family dwellings and multiple single-family dwellings (townhouses) not more than three stories above grade plane in height with a separate means of egress and their accessory structures shall comply with the ~~*International*~~ *California Residential Code*.

2308.2.2 Buildings in Seismic Design Category B, C, D or E. Buildings of conventional light-frame construction in Seismic Design Category B or C, as determined in Section 1613, shall comply with the additional requirements in Section 2308.11.

Buildings of conventional light-frame construction in Seismic Design Category D or E, as determined in Section 1613, shall comply with the additional requirements in Section 2308.12.

~~***Exceptions:***~~

1. ~~***[HCD 1]*** *Detached one- and two-family dwellings in Seismic Design Category B.*~~

2. ~~***[HCD 1]*** *Detached one- and two-family dwellings in Seismic Design Category C where masonry veneer is limited to the first two stories above grade.*~~

TABLE 2308.9.3(1)
BRACED WALL PANELS[a]

SEISMIC DESIGN CATEGORY	CONDITION	CONSTRUCTION METHODS[b,c]								BRACED PANEL LOCATION AND LENGTH[d]
		1	2	3	4	5	6	7	8	
A and B	One story, top of two or three story	X	X	X	X	X	X	X	X	Located in accordance with Section 2308.9.3 and not more than 25 feet on center.
	First story of two story or second story of three story	X	X	X	X	X	X	X	X	
	First story of three story	—	X	X	X	X[e]	X	X	X	
C	One story or top of two story ~~*[HCD 1] or three story*~~	—	X	X	X	X	X	X	X	Located in accordance with Section 2308.9.3 and not more than 25 feet on center.
	First story of two story ~~*[HCD 1] or second story of three story*~~	—	X	X	X	X[e]	X	X	X	Located in accordance with Section 2308.9.3 and not more than 25 feet on center, but total length shall not be less than 25% of building length[f].
	~~*[HCD 1] First story of three story*~~	~~—~~	~~X~~	~~X~~	~~X~~	~~X[e]~~	~~X~~	~~X~~	~~X~~	~~*[HCD 1] Located in accordance with Section 2308.9.3 and not more than 25 feet on center, but total length shall not be less than 40% of building length.*~~

For SI: 1 inch = 25.4 mm, 1 foot = 304.8 mm.
a. This table specifies minimum requirements for braced panels that form interior or exterior braced wall lines.
b. See Section 2308.9.3 for full description.
c. See Sections 2308.9.3.1 and 2308.9.3.2 for alternative braced panel requirements.
d. Building length is the dimension parallel to the braced wall length.
e. Gypsum wallboard applied to framing supports that are spaced at 16 inches on center.
f. The required lengths shall be doubled for gypsum board applied to only one face of a braced wall panel.

2308.11 Additional requirements for conventional construction in Seismic Design Category B or C. Structures of conventional light-frame construction in Seismic Design Category B or C, as determined in Section 1613, shall comply with Sections 2308.11.1 through 2308.11.3, in addition to the provisions of Sections 2308.1 through 2308.10.

2308.11.1 Number of Stories. Structures of conventional light-frame construction shall not exceed two stories above grade plane in Seismic Design Category C.

> ~~***Exception**: **[HCD 1]** Detached one- and two-family dwellings are permitted to be three stories in height in Seismic Design Category C.*~~

2308.12 Additional requirements for conventional construction in Seismic Design Category D or E. Structures of conventional light-frame construction in Seismic Design Category D or E, as determined in Section 1613, shall conform to Sections 2308.12.1 through 2308.12.9, in addition to the requirements for Seismic Design Category B or C in Section 2308.11.

2308.12.1 Number of stories. Structures of conventional light-frame construction shall not exceed one story above grade plane in Seismic Design Category D or E.

> ~~***Exception: [HCD 1]** Detached one- and two-family dwellings are permitted to be two stories high in Seismic Design Category D or E.*~~

TABLE 2308.12.4
WALL BRACING IN SEISMIC DESIGN CATEGORIES D AND E
(Minimum Length of Wall Bracing per each 25 Linear Feet of Braced Wall Line[a])

CONDITION	SHEATHING TYPE[b]	S_{DS} < 0.50	0.50 ≤ S_{DS} < 0.75	0.75 ≤ S_{DS} ≤ 1.00	S_{DS} > 1.00
One story	G-P[c]	10 feet 8 inches	14 feet 8 inches	18 feet 8 inches	25 feet 0 inches
	S-W	5 feet 4 inches	8 feet 0 inches	9 feet 4 inches	12 feet 0 inches
~~*Story below top story* **[HCD 1]***~~	~~*G-P*[c,d]~~	~~*18 feet 8 inches*[d]~~	~~*NP*~~	~~*NP*~~	~~*NP*~~
	~~*S-W*[d]~~	~~*10 feet 8 inches*[d]~~	~~*13 feet 4 inches*[d]~~	~~*17 feet 4 inches*[d]~~	~~*21 feet 4 inches*[d]~~
~~*Bottom story of three stories* **[HCD 1]***~~	~~*G-P*~~	~~*Conventional construction not permitted; conformance with Section 2301.2, Item 1 or 2 is required.*~~			
	~~*S-W*~~				

For SI: 1 inch = 25.4 mm, 1 foot = 304.8 mm.

a. Minimum length of panel bracing of one face of the wall for S-W sheathing or both faces of the wall for G-P sheathing; h/w ratio shall not exceed 2:1. For S-W panel bracing of the same material on two faces of the wall, the minimum length is permitted to be one-half the tabulated value but the h/w ratio shall not exceed 2:1 and design for uplift is required.

b. G-P = gypsum board, fiberboard, particleboard, lath and plaster or gypsum sheathing boards; S-W = wood structural panels and diagonal wood sheathing. ~~*NP = not permitted*~~.

c. Nailing as specified below shall occur at all panel edges at studs, at top and bottom plates and, where occurring, at blocking:
For $^{1}/_{2}$-inch gypsum board, 5d (0.113 inch diameter) cooler nails at 7 inches on center;
For $^{5}/_{8}$-inch gypsum board, No. 11 gage (0.120 inch diameter) at 7 inches on center;
For gypsum sheathing board, $1^{3}/_{4}$ inches long by $^{7}/_{16}$-inch head, diamond point galvanized nails at 4 inches on center;
For gypsum lath, No. 13 gage (0.092 inch) by $1^{1}/_{8}$ inches long, $^{19}/_{64}$-inch head, plasterboard at 5 inches on center;
For Portland cement plaster, No. 11 gage (0.120 inch) by $1^{1}/_{2}$ inches long, $^{7}/_{16}$- inch head at 6 inches on center;
For fiberboard and particleboard, No. 11 gage (0.120 inch) by $1^{1}/_{2}$ inches long, $^{7}/_{16}$-inch head, galvanized nails at 3 inches on center.

~~*d.* ***[HCD 1]*** *Applies to detached one- and two- family dwellings only*~~.

NOTE:
Authority Cited: Health and Safety Code Sections 17040, 17050, 17920.9, 17921, 17921.3, 17921.6, 17921.10, 17922, 17922.6, 17922.12, 17927, 17928, 17959.6, 18300, 18552, 18554, 18620, 18630, 18640, 18670, 18690, 18691, 18865, 18871.3, 18871.4, 18873, 18873.1, 18873.2, 18873.3, 18873.4, 18873.5, 18938.3, 18944.11 and 19990; and Government Code Section 12955.1.

Reference: Health and Safety Code Sections 17000 through 17062.5, 17910 through 17995.5, 18200 through 18700, 18860 through 18874, and 19960 through 19997; and Government Code Sections 12955.1 and 12955.1.1.

24. HCD proposes to adopt Chapter 24 without amendment:

CHAPTER 24

GLASS AND GLAZING

NOTE:
Authority Cited: Health and Safety Code Sections 17040, 17050, 17920.9, 17921, 17921.3, 17921.6, 17921.10, 17922, 17922.6, 17922.12, 17927, 17928, 17959.6, 18300, 18552, 18554, 18620, 18630, 18640, 18670, 18690, 18691, 18865, 18871.3, 18871.4, 18873, 18873.1, 18873.2, 18873.3, 18873.4, 18873.5, 18938.3, 18944.11 and 19990; and Government Code Section 12955.1.

Reference: Health and Safety Code Sections 17000 through 17062.5, 17910 through 17995.5, 18200 through 18700, 18860 through 18874, and 19960 through 19997; and Government Code Sections 12955.1 and 12955.1.1.

---

25. HCD proposes to adopt Chapter 25 without amendment:

CHAPTER 25

GYPSUM BOARD AND PLASTER

NOTE:
Authority Cited: Health and Safety Code Sections 17040, 17050, 17920.9, 17921, 17921.3, 17921.6, 17921.10, 17922, 17922.6, 17922.12, 17927, 17928, 17959.6, 18300, 18552, 18554, 18620, 18630, 18640, 18670, 18690, 18691, 18865, 18871.3, 18871.4, 18873, 18873.1, 18873.2, 18873.3, 18873.4, 18873.5, 18938.3, 18944.11 and 19990; and Government Code Section 12955.1.

Reference: Health and Safety Code Sections 17000 through 17062.5, 17910 through 17995.5, 18200 through 18700, 18860 through 18874, and 19960 through 19997; and Government Code Sections 12955.1 and 12955.1.1.

---

26. HCD proposes to adopt Chapter 26 without amendment:

CHAPTER 26

PLASTIC

NOTE:

Authority Cited: Health and Safety Code Sections 17040, 17050, 17920.9, 17921, 17921.3, 17921.6, 17921.10, 17922, 17922.6, 17922.12, 17927, 17928, 17959.6, 18300, 18552, 18554, 18620, 18630, 18640, 18670, 18690, 18691, 18865, 18871.3, 18871.4, 18873, 18873.1, 18873.2, 18873.3, 18873.4, 18873.5, 18938.3, 18944.11 and 19990; and Government Code Section 12955.1.

Reference: Health and Safety Code Sections 17000 through 17062.5, 17910 through 17995.5, 18200 through 18700, 18860 through 18874, and 19960 through 19997; and Government Code Sections 12955.1 and 12955.1.1.

---

27. HCD proposes to <u>not</u> adopt Chapter 27; however, HCD proposes the editorial correction of Section 2701.1 as follows:

CHAPTER 27

ELECTRICAL

SECTION 2701
GENERAL

2701.1 Scope. This chapter governs the electrical components, equipment and systems used in buildings and structures covered by this code. Electrical components, equipment and systems shall be designed and constructed in accordance with the provisions of the ~~NFPA 70~~ *California Electrical Code*.

NOTE:
Authority Cited: Health and Safety Code Sections 17040, 17050, 17920.9, 17921, 17921.3, 17921.6, 17921.10, 17922, 17922.6, 17922.12, 17927, 17928, 17959.6, 18300, 18552, 18554, 18620, 18630, 18640, 18670, 18690, 18691, 18865, 18871.3, 18871.4, 18873, 18873.1, 18873.2, 18873.3, 18873.4, 18873.5, 18938.3, 18944.11 and 19990; and Government Code Section 12955.1.

Reference: Health and Safety Code Sections 17000 through 17062.5, 17910 through 17995.5, 18200 through 18700, 18860 through 18874, and 19960 through 19997; and Government Code Sections 12955.1 and 12955.1.1.

---

28. HCD proposes to not adopt Chapter 28; however, HCD proposes the editorial correction of Section 2801.1 as follows:

CHAPTER 28

MECHANICAL SYSTEMS

SECTION 2801
GENERAL

2801.1 Scope. Mechanical appliances, equipment and systems shall be constructed, installed and maintained in accordance with the ~~International Mechanical Code and the International Fuel Gas Code~~ *California Mechanical Code*. Masonry chimneys, fireplaces and barbecues shall comply with the ~~International~~ *California Mechanical Code* and Chapter 21 of this code.

NOTE:
Authority Cited: Health and Safety Code Sections 17040, 17050, 17920.9, 17921, 17921.3, 17921.6, 17921.10, 17922, 17922.6, 17922.12, 17927, 17928, 17959.6, 18300, 18552, 18554, 18620, 18630, 18640, 18670, 18690, 18691, 18865, 18871.3, 18871.4, 18873, 18873.1, 18873.2, 18873.3, 18873.4, 18873.5, 18938.3, 18944.11 and 19990; and Government Code Section 12955.1.

Reference: Health and Safety Code Sections 17000 through 17062.5, 17910 through 17995.5, 18200 through 18700, 18860 through 18874, and 19960 through 19997; and Government Code Sections 12955.1 and 12955.1.1.

---

29. HCD proposes to not adopt Chapter 29; however, HCD proposes the editorial correction of Section 2901.1 as follows:

CHAPTER 29

PLUMBING SYSTEMS

SECTION 2901
GENERAL

2901.1 Scope. The provisions of t~~his chapter and~~ the ~~International~~ *California Plumbing Code* shall govern the erection, installation, alteration, repairs, relocation, replacement, addition to, use or maintenance of plumbing equipment and systems. Plumbing systems and equipment shall be constructed, installed and maintained in accordance with the ~~International~~ *California Plumbing Code*. Private sewage disposal systems shall conform to the ~~International Private Sewage Disposal~~ *California Plumbing* Code.

NOTE:
Authority Cited: Health and Safety Code Sections 17040, 17050, 17920.9, 17921, 17921.3, 17921.6, 17921.10, 17922, 17922.6, 17922.12, 17927, 17928, 17959.6, 18300, 18552, 18554, 18620, 18630, 18640, 18670, 18690, 18691, 18865, 18871.3, 18871.4, 18873, 18873.1, 18873.2, 18873.3, 18873.4, 18873.5, 18938.3, 18944.11 and 19990; and Government Code Section 12955.1.

Reference: Health and Safety Code Sections 17000 through 17062.5, 17910 through 17995.5, 18200 through 18700, 18860 through 18874, and 19960 through 19997; and Government Code Sections 12955.1 and 12955.1.1.

---

30. HCD proposes to adopt Chapter 30, Sections 3001.1 and 3001.3, with amendments, and proposes the editorial correction of Section 3004.3 as follows:

CHAPTER 30

ELEVATORS AND CONVEYING SYSTEMS

MATRIX ADOPTION TABLE NOTATION:
The ♦ designation indicates that the State Fire Marshal's adoption of this chapter or sections is applicable to structures subject to HCD 1 and/or HCD 2.

SECTION 3001
GENERAL

3001.1 Scope. This chapter governs the design, construction, installation, alteration and repair of elevators and conveying systems and their components.

Exception: [DSA-AC and HCD 1-AC] *For accessibility requirements for platform (wheelchair) lifts and elevators, see California Code of Regulations, Title 8 and Title 24, Part 2, Sections 1124A and 1116B.*

3001.3 Accessibility. Passenger elevators *and platform (wheelchair) lifts* required to be accessible by Chapters 11*A or 11B* shall conform to ~~ICC A117.1~~ *Chapter 11A for applications listed in Section ~~108.2.1.2~~ 1.8.2.1.2 regulated by the Department of Housing and Community Development or Chapter 11B for applications listed in Section ~~109.1~~ 1.9.1 regulated by the Division of the State Architect--Access Compliance.*

SECTION 3004
HOISTWAY VENTING

3004.3.1 Reduced vent area. Where mechanical ventilation conforming to the ~~*International*~~ *California Mechanical Code* is provided, a reduction in the required vent area is allowed provided that all of the following conditions are met:

1. The occupancy is not in Group R-1, R-2, I-1 or I-2 or of a similar occupancy with overnight sleeping units.

. . .

NOTE:
Authority Cited: Health and Safety Code Sections 17040, 17050, 17920.9, 17921, 17921.3, 17921.6, 17921.10, 17922, 17922.6, 17922.12, 17927, 17928, 17959.6, 18300, 18552, 18554, 18620, 18630, 18640, 18670, 18690, 18691, 18865, 18871.3, 18871.4, 18873, 18873.1, 18873.2, 18873.3, 18873.4, 18873.5, 18938.3, 18944.11 and 19990; and Government Code Section 12955.1.

Reference: Health and Safety Code Sections 17000 through 17062.5, 17910 through 17995.5, 18200 through 18700, 18860 through 18874, and 19960 through 19997; and Government Code Sections 12955.1 and 12955.1.1.

---

31. HCD proposes to adopt Chapter 31, except Section 3109, with amendments as follows:

CHAPTER 31
SPECIAL CONSTRUCTION

SECTION 3104
PEDESTRIAN WALKWAYS AND TUNNELS

3104.2 Separate structures. Connected buildings shall be considered to be separate structures.

Exceptions:

1. Buildings on the same lot in accordance with Section 503.1.2.

2. ***[HCD 1-AC]*** For purposes of *accessibility* ~~calculating the number of Type B units required by Chapter 11~~ *as required by Chapter 11A*, structurally connected buildings*, buildings connected by stairs, walkways, or roofs,* and buildings with multiple wings shall be considered one structure.

NOTE:
Authority Cited: Health and Safety Code Sections 17040, 17050, 17920.9, 17921, 17921.3, 17921.6, 17921.10, 17922, 17922.6, 17922.12, 17927, 17928, 17959.6, 18300, 18552, 18554, 18620, 18630, 18640, 18670, 18690, 18691, 18865, 18871.3, 18871.4, 18873, 18873.1, 18873.2, 18873.3, 18873.4, 18873.5, 18938.3, 18944.11 and 19990; and Government Code Section 12955.1.

Reference: Health and Safety Code Sections 17000 through 17062.5, 17910 through 17995.5, 18200 through 18700, 18860 through 18874, and 19960 through 19997; and Government Code Sections 12955.1 and 12955.1.1.

---

32. HCD proposes to adopt Chapter 32 without amendment:

CHAPTER 32

ENCROACHMENTS INTO THE PUBLIC RIGHT-OF-WAY

NOTE:
Authority Cited: Health and Safety Code Sections 17040, 17050, 17920.9, 17921, 17921.3, 17921.6, 17921.10, 17922, 17922.6, 17922.12, 17927, 17928, 17959.6, 18300, 18552, 18554, 18620, 18630, 18640, 18670, 18690, 18691, 18865, 18871.3, 18871.4, 18873, 18873.1, 18873.2, 18873.3, 18873.4, 18873.5, 18938.3, 18944.11 and 19990; and Government Code Section 12955.1.

Reference: Health and Safety Code Sections 17000 through 17062.5, 17910 through 17995.5, 18200 through 18700, 18860 through 18874, and 19960 through 19997; and Government Code Sections 12955.1 and 12955.1.1.

---

33. HCD proposes to adopt Chapter 33, <u>Section 3306.2 only</u>, with amendments, and proposes the editorial correction of Section 3305.1 as follows:

CHAPTER 33

SAFEGUARDS DURING CONSTRUCTION

SECTION 3305
SANITARY

3305.1 Facilities required. Sanitary facilities shall be provided during construction, remodeling or demolition activities in accordance with the ~~*International*~~ *California Plumbing Code*.

SECTION 3306
PROTECTION OF PEDESTRIANS

3306.2 Walkways. A walkway shall be provided for pedestrian travel in front of every construction and demolition site unless the applicable governing authority authorizes the sidewalk to be fenced or closed. Walkways shall be of sufficient width to accommodate the pedestrian traffic, but in no case shall they be less than 4 feet (1219 mm) in width. Walkways shall be provided with a durable walking surface. Walkways shall be accessible in accordance with Chapter*s* 11*A or 11B* and shall be designed to support all imposed loads and in no case shall the design live load be less than 150 pounds per square foot (psf) (7.2 kN/m^2).

NOTE:
Authority Cited: Health and Safety Code Sections 17040, 17050, 17920.9, 17921, 17921.3, 17921.6, 17921.10, 17922, 17922.6, 17922.12, 17927, 17928, 17959.6, 18300, 18552, 18554, 18620, 18630, 18640, 18670, 18690, 18691, 18865, 18871.3, 18871.4, 18873, 18873.1, 18873.2, 18873.3, 18873.4, 18873.5, 18938.3, 18944.11 and 19990; and Government Code Section 12955.1.

Reference: Health and Safety Code Sections 17000 through 17062.5, 17910 through 17995.5, 18200 through 18700, 18860 through 18874, and 19960 through 19997; and Government Code Sections 12955.1 and 12955.1.1.

---

34. HCD proposes to adopt Chapter 34, Sections 3401.1, 3401.3, 3401.4.3, 3403.1, 3403.1.1, 3404.1, 3404.1.1, 3405.1.2 and 3410.1 with amendments, and Sections 3403.4.1, 3404.4.1, 3405.1 and 3405.1.1 without amendments as follows:

CHAPTER 34

EXISTING STRUCTURES

MATRIX ADOPTION TABLE NOTATION:
The ♦ designation indicates that the State Fire Marshal's adoption of this chapter is applicable to structures subject to HCD 1 and HCD 2.

SECTION 3401
GENERAL

3401.1 Scope. The provisions of this chapter shall control the alteration, repair, addition and change of occupancy of existing structures.

Exceptions:

1. Existing bleachers, grandstands and folding and telescopic seating shall comply with ICC 300-02.

2. ***[HCD 2]*** *For moved buildings and maintenance, alteration, repair, addition, or change of occupancy to existing buildings and accessory structures in mobilehome parks or special occupancy parks as provided in Section ~~108.2.1.3~~ 1.8.2.1.3. See California Code of Regulations, Title 25, Division 1, Chapter 2~~,~~ and 2.2.*
3. ***[HCD 1]*** *Limited-density owner-built rural dwellings.*

3401.3 Compliance. Alterations, repairs, additions and changes of occupancy to existing structures shall comply with the provisions for alterations, repairs, additions and changes of occupancy in the International Fire Code, *~~International Fuel Gas Code, International~~ California Mechanical Code, ~~International~~ California Plumbing Code, ~~International Property Maintenance Code, International Private Sewage Disposal Code,~~ , ~~International~~ California Residential Code* and ~~NFPA 70~~ *California Electrical Code*.

[HCD 1] *See Chapter 34, Sections ~~3403.1, Exception 2~~ 3401.4.3, 3403.1.1 and 3404.1.1 and Title 25, Division 1, Chapter 1, Subchapter 1, ~~Article 1,~~ commencing with Article 1, Section 1 for existing buildings or structures.*

3401.4 Building materials. Building materials shall comply with the requirements of this section.
. . .

3401.4.3 Replacement, retention and extension of original materials*.* ***[HCD 1]*** *Local ordinances or regulations shall permit the replacement, retention and extension of original materials, and the use of original methods of construction, for any building or accessory structure, provided such building or structure complied with the building code provisions in effect at the time of original construction and the building or accessory structure does not become or continue to be a substandard building. For additional information, see Health and Safety Code Sections 17912, 17920.3, 17922(d), 17922.3, 17958.8 and 17958.9.*

SECTION 3403
ADDITIONS

~~**3403.1 Existing buildings or structures.**~~

~~***Exceptions: [HCD 1]***~~

~~*1 Limited-density owner-built rural dwellings.*~~

~~*2. Local ordinances or regulations shall permit the replacement, retention and extension of original materials, and the use of original methods of construction, for any building or accessory structure, provided such building or structure complied with the building code provisions in effect at the time of original construction and the building or accessory structure does not become or continue to be a substandard building. For additional information, see Health and Safety Code Sections 17912, 17920.3, 17922(d), 17922.3, 17958.8 and 17958.9*~~

3403.1 General. Additions to any building or structure shall comply with the requirements of this code for new construction. Alterations to the existing building or structure shall be made to ensure that the existing building or structure together with the addition are no less conforming with the provisions of this code than the existing building or structure was prior to the addition. An existing building together with its additions shall comply with the height and area provisions of Chapter 5.

***3403.1.1 Replacement, retention and extension of original materials**. [HCD 1] Local ordinances or regulations shall permit the replacement, retention and extension of original materials, and the use of original methods of construction, for any building or accessory structure, provided such building or structure complied with the building code provisions in effect at the time of original construction and the building or accessory structure does not become or continue to be a substandard building. For additional information, see Health and Safety Code Sections 17912, 17920.3, 17922(d), 17922.3, 17958.8 and 17958.9.*

SECTION 3404
ALTERATIONS

3404.1 General. Except as provided by Section 3401.4 or this section, alterations to any building or structure shall comply with the requirements of the code for new construction. Alterations shall be such that the existing building or structure is no less complying with the provisions of this code than the existing building or structure was prior to the alteration.

Exceptions:

1. An existing stairway shall not be required to comply with the requirements of Section 1009 where the existing space and construction does not allow a reduction in pitch or slope.
2. Handrails otherwise required to comply with Section 1009.12 shall not be required to comply with the requirements of Section 1012.6 regarding full extension of the handrails where such extensions would be hazardous due to plan configuration.

***3404.1.1 Replacement, retention and extension of original materials**. [HCD 1] Local ordinances or regulations shall permit the replacement, retention and extension of original materials, and the use of original methods of construction, for any building or accessory structure, provided such building or structure complied with the building code provisions in effect at the time of original construction and the building or accessory structure does not become or continue to be a substandard building. For additional information, see Health and Safety Code Sections 17912, 17920.3, 17922(d), 17922.3, 17958.8 and 17958.9*

SECTION 3405
REPAIRS

3405.1 General. Buildings and structures, and parts thereof, shall be repaired in compliance with Section 3401.2. Work on nondamaged components that is necessary for the required repair of damaged components shall be considered part of the repair and shall not be subject to the requirements for alterations in this chapter. Routine maintenance required by Section 3401.2, ordinary repairs exempt from permit in accordance with Section 105.2, and abatement of wear due to normal service conditions shall not be subject to the requirements for repairs in this section.

3405.1.1 Dangerous conditions. Regardless of the extent of structural or nonstructural damage, the building code official shall have the authority to require the elimination of conditions deemed dangerous.

3405.1.2 Replacement, retention and extension of original materials. [HCD 1] *Local ordinances or regulations shall permit the replacement, retention and extension of original materials, and the use of original methods of construction, for any building or accessory structure, provided such building or structure complied with the building code provisions in effect at the time of original construction and the building accessory structure does not become or continue to be a substandard building. For additional information, see Health and Safety Code Sections 17912, 17920.3, 17922(d), 17922.3, 17958.8 and 17958.9.*

SECTION 3410
MOVED STRUCTURES

3410.1 Conformance. Structures moved into or within the jurisdiction shall comply with the provisions of this code for new structures.

Exception: [HCD 1 & HCD 2] *After July 1, 1978, local ordinances or regulations for moved apartment houses and dwellings shall permit the retention of existing materials and methods of construction, provided the apartment house or dwelling complies with the building standards for foundations applicable to new construction and does not become or continue to be a substandard building. For additional information, see Health and Safety Code Section 17958.9.*

~~**SECTION 3411**~~
~~**ACCESSIBILITY FOR EXISTING BUILDINGS**~~

NOTE:
Authority Cited: Health and Safety Code Sections 17040, 17050, 17920.9, 17921, 17921.3, 17921.6, 17921.10, 17922, 17922.6, 17922.12, 17927, 17928, 17959.6, 18300, 18552, 18554, 18620, 18630, 18640, 18670, 18690, 18691, 18865, 18871.3, 18871.4, 18873, 18873.1, 18873.2, 18873.3, 18873.4, 18873.5, 18938.3, 18944.11 and 19990; and Government Code Section 12955.1.

Reference: Health and Safety Code Sections 17000 through 17062.5, 17910 through 17995.5, 18200 through 18700, 18860 through 18874, and 19960 through 19997; and Government Code Sections 12955.1 and 12955.1.1.

---

35. HCD proposes to adopt Chapter 35 with amendments as follows:

CHAPTER 35

REFERENCED STANDARDS

This chapter lists the standards that are referenced in various sections of this document. The standards are listed herein by the promulgating agency of the standard, the standard identification, the effective date and title, and the section or sections of this document that reference the standard. The application of the referenced standards shall be as specified in *Chapter 1, Administration, Division I,* Sections ~~101.5~~ 1.1.5 and ~~101.7~~ 1.1.7 and in ~~Appendix~~ Chapter 1, *Administration, Division II,* Section 102.4

ICC	International Code Council 500 New Jersey Avenue, NW 6th Floor Washington, DC 20001	
Standard Reference Number	Title	Referenced in code section number
~~ICC/ANSI A117.1—03~~	~~Accessible and Usable Buildings and Facilities~~	~~406.2.2, 907.9.1.4,1007.6.5, 1010.1, 1010.6.5, 1010.9, 1011.3, 1101.2, 1102.1, 1103.2.14, 1106.7, 1107.2, 1108.2.2, 1109.1, 1109.2, 1109.2.1.1, 1109.2.2, 1109.2.3, 1109.3, 1109.4, 1109.8, 2902.4, 3001.3, 3008.13.1, 3008.13.2, 3411.6, 3411.8.2, 3411.8.3, E101.2, E104.2, E104.2.1, E104.3, E104.3.1, E104.3.4, E105.1, E105.2.1, E105.2.2, E105.3, E105.4, E105.6, E106.2, E106.3, E106.4, E106.4.9, E106.5, E107.2, E107.3, E108.3, E108.4, E109.2.1, E109.2.2.1, E109.2.2.2, E109.2.2.3, E109.2.3, E110.4~~
ICC 300-07	ICC Standard on Bleachers, Folding and Telescopic Seating and Grandstands	1028.1.1, Table 1607.1, 3401.1
ICC 400-07	Standard on Design and Construction of Log Structures	2301.2
ICC 500—08	ICC/NSSA Standard on the Design and Construction of Storm Shelters	423.1, 423.2
ICC 600-08	Standard for Residential Construction in High Wind Regions	1609.1.1, 1609.1.1.1, 2308.2.1
~~IECC 09~~	~~International Energy Conservation Code®~~	~~101.4.7, 1203.3.2, 1301.1.1, K201.3~~
~~IFC 09~~	~~International Fire Code®~~	~~101.4.5, 102.6, 201.3, 307.1, 307.1(2), 307.1.1, 307.2, Table 307.1(1), 404.2, 403.4.4, 406.5.1, 406.6.1, 410.3.6, 411.1, 412.1, 412.6.1, 413.1, 414.1.1, 414.1.2, 414.1.2.1, 414.2, 414.2.5,Table 414.2.5(1), Table 414.2.5(2), 414.3, 414.5, 414.5.1,Table 414.5.1, 414.5.2, 414.5.4, 414.5.5, 414.6, 415.1, 415.2, 415.3, 415.3.1, Table 415.3.1, Table 415.3.2, 415.6, 415.6.1, 415.6.1.4, 415.6.2, 415.6.2.3, 415.6.2.5, 415.6.2.7, 415.6.2.8, 415.6.2.9, 415.6.3, 415.6.4, 415.7, 415.8.1, 415.8.2.7, 415.8.5.1, 415.8.7.2, 415.8.9.3, 415.8.10.1, 416.1,421.1, 421.7, 507.3, 707.1, 901.2, 901.3, 901.5, 901.6.2, 903.2.6.1, 903.2.11,Table 903.2.13, 903.5, 904.2.1, 905.1, 905.3.6, 906.1, 907.2.5, 907.2.12.2, 907.2.14, 907.2.16, 907.14, 907.19, 909.20, 910.2.2, Table 910.3, 1001.3, 1203.4.2, 1203.5, 2702.1, 2702.2.9, 2702.2.11, 2702.2.12, 2702.2.13, 2702.3, 3102.1, 3103.1, 3309.2, 3401.3, 3412.3.2, 3412.6.8.1, 3412.6.14, 3412.16.14.1, K201.3, K1202.8, K1202.9~~
~~IFGC 09~~	~~International Fuel Gas Code®~~	~~.101.4.1, 201.3, Table 307.1(1),~~

		~~415.6.3, 2113.11.1.2, 2113.15, 2801.1, 3401.3, A101.2, K201.3, K1202.11~~
~~IMC-09~~	~~International Mechanical Code®~~	~~101.4.2, 201.3, 307.1, Table 307.1(1), 406.4.2, 406.6.3, 406.6.5, 409.3, 412.6.6, 414.1.2, 414.3, 415.6.1.4, 415.6.2, 415.6.2.8, 415.6.3, 415.6.4, 415.8.11.1, 416.3, 421.5, 603.1, 603.1.1, 603.1.2, 708.2, 716.2.2, 716.5.4, 716.6.1, 716.6.2, 716.6.3, 717.5, 719.1, 719.7, 903.2.12.1, 904.2.1, 904.11, 908.6, 909.1, 909.10.2, 1015.5, 1018.5.1, 1203.1, 1203.2.1, 1203.4.2, 1203.4.2.1, 1203.5, 1209.3, 2304.5, 2801.1, 3004.3.1, 3401.3,3412.6.7.1, 3412.6.8, 3412.6.8.1, A101.2, K201.3, K1202.10, K1202.10.1, K1202.11~~
~~IPC-09~~	~~International Plumbing Code®~~	~~.101.4.3, 201.3, 415.6.4, 717.5, 903.3.5, 912.5, 1206.3.3,1503.4, 1805.4.3, 2901.1, Table 2902.1, 3305.1, 3401.3, A101.2, K201.3~~
~~IPMC-09~~	~~International Property Maintenance Code®~~	~~101.4.4, 102.6, 103.3, 3401.3, 3412.3.2, K201.3, K1203.1~~
~~IPSDC-09~~	~~International Private Sewage Disposal Code®~~	~~.101.4.3, 2901.1, 3401.3, K201.3~~
~~IRC-09~~	~~International Residential Code®~~	~~101.2, 308.2, 308.3, 308.5, 310.1, 2308.1, 3401.3, K201.3, K1202.11~~
~~IWUIC-09~~	~~International Wildland-Urban Interface Code™~~	~~Table 1505.1~~
IZC-09	International Zoning Code	K201.3
SBCCI SSTD 11-97	Test Standard for Determining Wind Resistance of Concrete or Clay Roof Tiles	1716.2.1, 1716.2.2

NFPA	National Fire Protection Association 1 Batterymarch Park Quincy, MA 02169-7471	
Standard Reference Number	Title	Referenced in code section number
720	Standard for the Installation of Carbon Monoxide (CO) Detection and Warning Equipment 2009 Edition	420.4

UL	Underwriters Laboratories, Inc. 333 Pfingsten Road Northbrook, IL 60062-2096	
Standard Reference Number	Title	Referenced in code section number
2034	Single and Multiple Station Carbon Monoxide Alarms effective August 1, 2009	420.4

NOTE:
Authority Cited: Health and Safety Code Sections 17040, 17050, 17920.9, 17921, 17921.3, 17921.6, 17921.10, 17922, 17922.6, 17922.12, 17927, 17928, 17959.6, 18300, 18552, 18554, 18620, 18630, 18640, 18670, 18690, 18691, 18865, 18871.3, 18871.4, 18873, 18873.1, 18873.2, 18873.3, 18873.4, 18873.5, 18938.3, 18944.11 and 19990; and Government Code Section 12955.1.

Reference: Health and Safety Code Sections 17000 through 17062.5, 17910 through 17995.5, 18200 through 18700, 18860 through 18874, and 19960 through 19997; and Government Code Sections 12955.1 and 12955.1.1.

---

36. HCD proposes a note for the former location of California Appendix Chapter 1 as follows:

APPENDIX CHAPTER 1

ADMINISTRATION

("Appendix Chapter 1, Administration" has been relocated to "Chapter 1, Administration, *Division II*")

NOTE:
Authority Cited: Health and Safety Code Sections 17040, 17050, 17920.9, 17921, 17921.3, 17921.6, 17921.10, 17922, 17922.6, 17922.12, 17927, 17928, 17959.6, 18300, 18552, 18554, 18620, 18630, 18640, 18670, 18690, 18691, 18865, 18871.3, 18871.4, 18873, 18873.1, 18873.2, 18873.3, 18873.4, 18873.5, 18938.3, 18944.11 and 19990; and Government Code Section 12955.1.

Reference: Health and Safety Code Sections 17000 through 17062.5, 17910 through 17995.5, 18200 through 18700, 18860 through 18874, and 19960 through 19997; and Government Code Sections 12955.1 and 12955.1.1.

---

37. HCD proposes to not adopt Appendix A.

APPENDIX A

EMPLOYEE QUALIFICATIONS

NOTE:
Authority Cited: Health and Safety Code Sections 17040, 17050, 17920.9, 17921, 17921.3, 17921.6, 17921.10, 17922, 17922.6, 17922.12, 17927, 17928, 17959.6, 18300, 18552, 18554, 18620, 18630, 18640, 18670, 18690, 18691, 18865, 18871.3, 18871.4, 18873, 18873.1, 18873.2, 18873.3, 18873.4, 18873.5, 18938.3, 18944.11 and 19990; and Government Code Section 12955.1.

Reference: Health and Safety Code Sections 17000 through 17062.5, 17910 through 17995.5, 18200 through 18700, 18860 through 18874, and 19960 through 19997; and Government Code Sections 12955.1 and 12955.1.1.

---

38. HCD proposes to not adopt Appendix B.

APPENDIX B

BOARD OF APPEALS

NOTE:
Authority Cited: Health and Safety Code Sections 17040, 17050, 17920.9, 17921, 17921.3, 17921.6, 17921.10, 17922, 17922.6, 17922.12, 17927, 17928, 17959.6, 18300, 18552, 18554, 18620, 18630, 18640, 18670, 18690, 18691, 18865, 18871.3, 18871.4, 18873, 18873.1, 18873.2, 18873.3, 18873.4, 18873.5, 18938.3, 18944.11 and 19990; and Government Code Section 12955.1.

Reference: Health and Safety Code Sections 17000 through 17062.5, 17910 through 17995.5, 18200 through 18700, 18860 through 18874, and 19960 through 19997; and Government Code Sections 12955.1 and 12955.1.1.

---

39. HCD proposes to not adopt Appendix C.

APPENDIX C

GROUP U – AGRICULTURAL BUILDINGS

NOTE:
Authority Cited: Health and Safety Code Sections 17040, 17050, 17920.9, 17921, 17921.3, 17921.6, 17921.10, 17922, 17922.6, 17922.12, 17927, 17928, 17959.6, 18300, 18552, 18554, 18620, 18630, 18640, 18670, 18690, 18691, 18865, 18871.3, 18871.4, 18873, 18873.1, 18873.2, 18873.3, 18873.4, 18873.5, 18938.3, 18944.11 and 19990; and Government Code Section 12955.1.

Reference: Health and Safety Code Sections 17000 through 17062.5, 17910 through 17995.5, 18200 through 18700, 18860 through 18874, and 19960 through 19997; and Government Code Sections 12955.1 and 12955.1.1.

---

40. HCD proposes to not adopt Appendix D.

APPENDIX D

FIRE DISTRICTS

NOTE:
Authority Cited: Health and Safety Code Sections 17040, 17050, 17920.9, 17921, 17921.3, 17921.6, 17921.10, 17922, 17922.6, 17922.12, 17927, 17928, 17959.6, 18300, 18552, 18554, 18620, 18630, 18640, 18670, 18690, 18691, 18865, 18871.3, 18871.4, 18873, 18873.1, 18873.2, 18873.3, 18873.4, 18873.5, 18938.3, 18944.11 and 19990; and Government Code Section 12955.1.

Reference: Health and Safety Code Sections 17000 through 17062.5, 17910 through 17995.5, 18200 through 18700, 18860 through 18874, and 19960 through 19997; and Government Code Sections 12955.1 and 12955.1.1.

---

41. HCD proposes to not adopt Appendix E and remove it from the printed California Building Code.

APPENDIX E

SUPPLEMENTARY ACCESSIBILITY REQUIREMENTS

NOTE:
Authority Cited: Health and Safety Code Sections 17040, 17050, 17920.9, 17921, 17921.3, 17921.6, 17921.10, 17922, 17922.6, 17922.12, 17927, 17928, 17959.6, 18300, 18552, 18554, 18620, 18630, 18640, 18670, 18690, 18691, 18865, 18871.3, 18871.4, 18873, 18873.1, 18873.2, 18873.3, 18873.4, 18873.5, 18938.3, 18944.11 and 19990; and Government Code Section 12955.1.

Reference: Health and Safety Code Sections 17000 through 17062.5, 17910 through 17995.5, 18200 through 18700, 18860 through 18874, and 19960 through 19997; and Government Code Sections 12955.1 and 12955.1.1.

---

42. HCD proposes to <u>not</u> adopt Appendix F.

APPENDIX F

RODENTPROOFING

NOTE:
Authority Cited: Health and Safety Code Sections 17040, 17050, 17920.9, 17921, 17921.3, 17921.6, 17921.10, 17922, 17922.6, 17922.12, 17927, 17928, 17959.6, 18300, 18552, 18554, 18620, 18630, 18640, 18670, 18690, 18691, 18865, 18871.3, 18871.4, 18873, 18873.1, 18873.2, 18873.3, 18873.4, 18873.5, 18938.3, 18944.11 and 19990; and Government Code Section 12955.1.

Reference: Health and Safety Code Sections 17000 through 17062.5, 17910 through 17995.5, 18200 through 18700, 18860 through 18874, and 19960 through 19997; and Government Code Sections 12955.1 and 12955.1.1.

---

43. HCD proposes to <u>not</u> adopt Appendix G.

APPENDIX G

FLOOD-RESISTANT CONSTRUCTION

NOTE:
Authority Cited: Health and Safety Code Sections 17040, 17050, 17920.9, 17921, 17921.3, 17921.6, 17921.10, 17922, 17922.6, 17922.12, 17927, 17928, 17959.6, 18300, 18552, 18554, 18620, 18630, 18640, 18670, 18690, 18691, 18865, 18871.3, 18871.4, 18873, 18873.1, 18873.2, 18873.3, 18873.4, 18873.5, 18938.3, 18944.11 and 19990; and Government Code Section 12955.1.

Reference: Health and Safety Code Sections 17000 through 17062.5, 17910 through 17995.5, 18200 through 18700, 18860 through 18874, and 19960 through 19997; and Government Code Sections 12955.1 and 12955.1.1.

---

44. HCD proposes to <u>not</u> adopt Appendix H.

APPENDIX H

SIGNS

NOTE:
Authority Cited: Health and Safety Code Sections 17040, 17050, 17920.9, 17921, 17921.3, 17921.6, 17921.10, 17922, 17922.6, 17922.12, 17927, 17928, 17959.6, 18300, 18552, 18554, 18620, 18630, 18640, 18670, 18690, 18691, 18865, 18871.3, 18871.4, 18873, 18873.1, 18873.2, 18873.3, 18873.4, 18873.5, 18938.3, 18944.11 and 19990; and Government Code Section 12955.1.

Reference: Health and Safety Code Sections 17000 through 17062.5, 17910 through 17995.5, 18200 through 18700, 18860 through 18874, and 19960 through 19997; and Government Code Sections 12955.1 and 12955.1.1.

---

45. HCD proposes to adopt Appendix I without amendments for HCD 1 only:

APPENDIX I

PATIO COVERS

NOTE:
Authority Cited: Health and Safety Code Sections 17040, 17050, 17920.9, 17921, 17921.3, 17921.6, 17921.10, 17922, 17922.6, 17922.12, 17927, 17928, 17959.6, 18300, 18552, 18554, 18620, 18630, 18640, 18670, 18690, 18691, 18865, 18871.3, 18871.4, 18873, 18873.1, 18873.2, 18873.3, 18873.4, 18873.5, 18938.3, 18944.11 and 19990; and Government Code Section 12955.1.

Reference: Health and Safety Code Sections 17000 through 17062.5, 17910 through 17995.5, 18200 through 18700, 18860 through 18874, and 19960 through 19997; and Government Code Sections 12955.1 and 12955.1.1.

---

46. HCD proposes to adopt Appendix J without amendments for HCD 1 only:

APPENDIX J

GRADING

NOTE:
Authority Cited: Health and Safety Code Sections 17040, 17050, 17920.9, 17921, 17921.3, 17921.6, 17921.10, 17922, 17922.6, 17922.12, 17927, 17928, 17959.6, 18300, 18552, 18554, 18620, 18630, 18640, 18670, 18690, 18691, 18865, 18871.3, 18871.4, 18873, 18873.1, 18873.2, 18873.3, 18873.4, 18873.5, 18938.3, 18944.11 and 19990; and Government Code Section 12955.1.

Reference: Health and Safety Code Sections 17000 through 17062.5, 17910 through 17995.5, 18200 through 18700, 18860 through 18874, and 19960 through 19997; and Government Code Sections 12955.1 and 12955.1.1.

---

47. HCD proposes to <u>not</u> adopt Appendix K. This new appendix contains only administrative provisions that are intended to be used by a jurisdiction to implement and enforce NFPA 70, the *National Electrical Code*.

APPENDIX K

ADMINISTRATIVE PROVISIONS

NOTE:
Authority Cited: Health and Safety Code Sections 17040, 17050, 17920.9, 17921, 17921.3, 17921.6, 17921.10, 17922, 17922.6, 17922.12, 17927, 17928, 17959.6, 18300, 18552, 18554, 18620, 18630, 18640, 18670, 18690, 18691, 18865, 18871.3, 18871.4, 18873, 18873.1, 18873.2, 18873.3, 18873.4, 18873.5, 18938.3, 18944.11 and 19990; and Government Code Section 12955.1.

Reference: Health and Safety Code Sections 17000 through 17062.5, 17910 through 17995.5, 18200 through 18700, 18860 through 18874, and 19960 through 19997; and Government Code Sections 12955.1 and 12955.1.1.

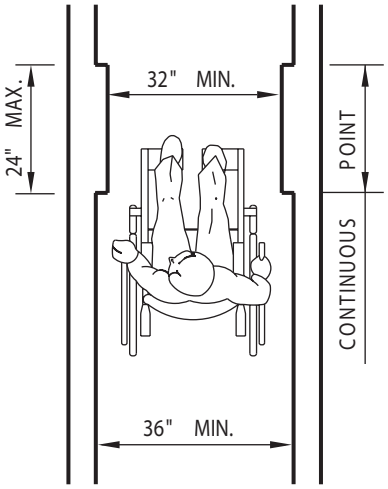

FIGURE 11A-1E—MINIMUM CLEAR WIDTH FOR SINGLE WHEELCHAIR

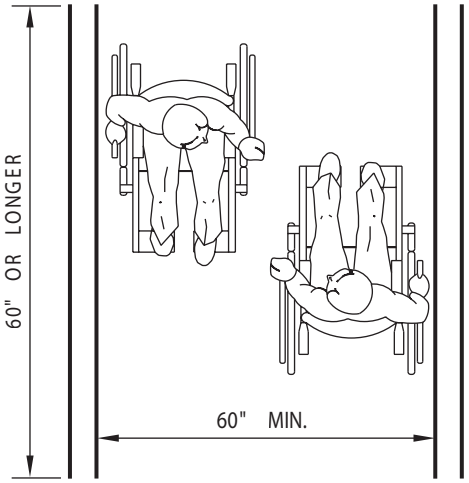

FIGURE 11A-~~1D~~ 1F—MINIMUM CLEAR WIDTH FOR TWO WHEELCHAIRS

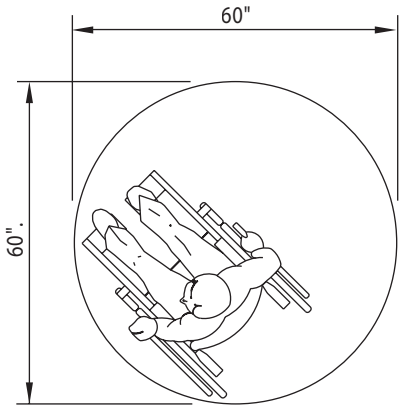

(a) 60 INCHES DIAMETER SPACE

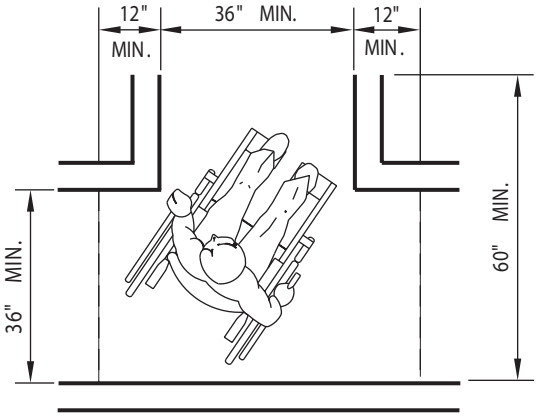

(b) T–SHAPED SPACE FOR 180° TURNS

THESE DIAGRAMS ILLUSTRATE THE SPECIFIC REQUIREMENTS OF THESE REGULATIONS AND ARE INTENDED ONLY AS AN AID FOR BUILDING DESIGN AND CONSTRUCTION.

FIGURE 11A-1D—WHEELCHAIR TURNING SPACE

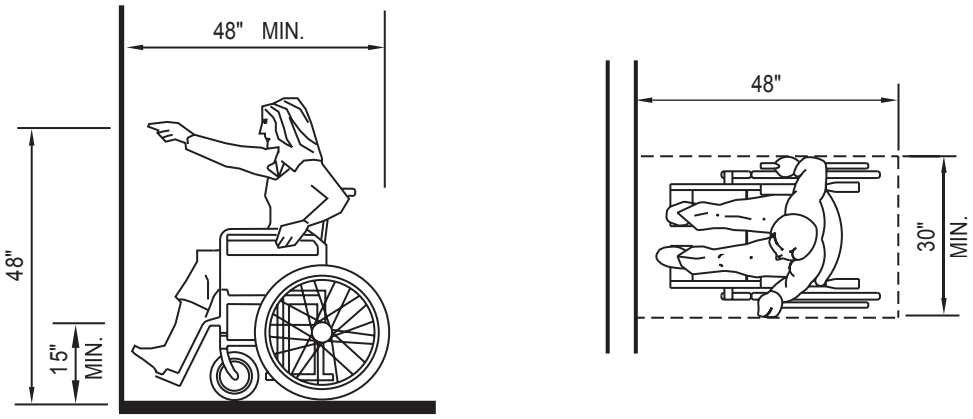

(a) HIGH FORWARD REACH LIMIT

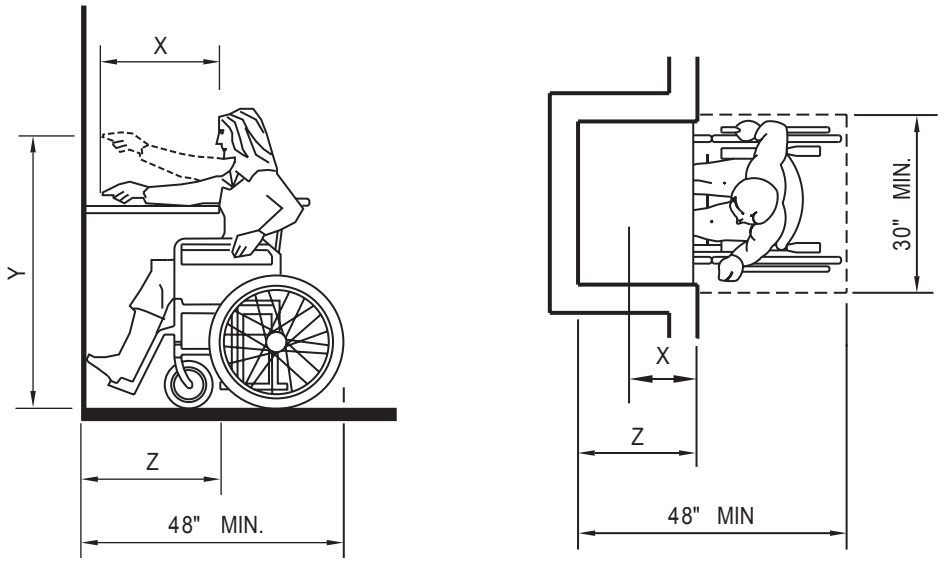

NOTE :
X SHALL BE LESS THAN OR EQUAL TO 25 INCHES. Z SHALL BE GREATER THAN OR EQUAL TO X. WHEN X IS LESS THAN 20 INCHES, THEN Y SHALL BE 48 INCHES MAXIMUM. WHEN X IS 20 TO 25 INCHES, THEN Y SHALL BE 44 INCHES MAXIMUM.

(b) MAXIMUM FORWARD REACH OVER AN OBSTRUCTION

THESE DIAGRAMS ILLUSTRATE THE SPECIFIC REQUIREMENTS OF THESE REGULATIONS AND ARE INTENDED ONLY AS AN AID FOR BUILDING DESIGN AND CONSTRUCTION

FIGURE 11A-1I—FORWARD REACH

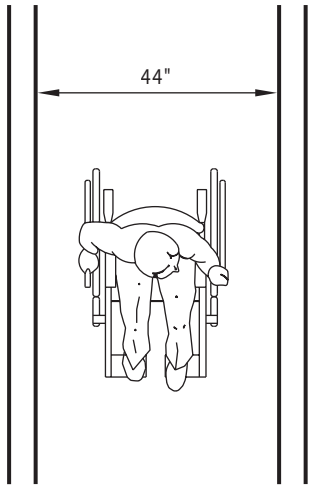

MINIMUM CORRIDOR WIDTH

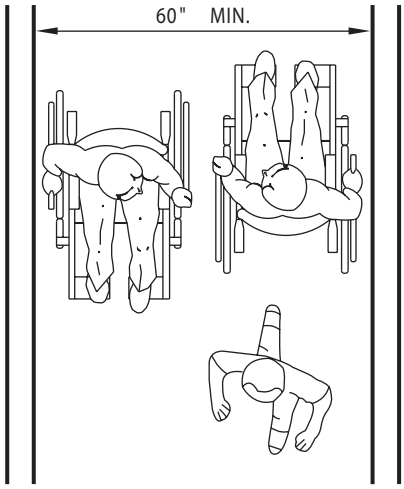

MINIMUM WIDTH FOR
CORRIDORS OVER 200 FEET

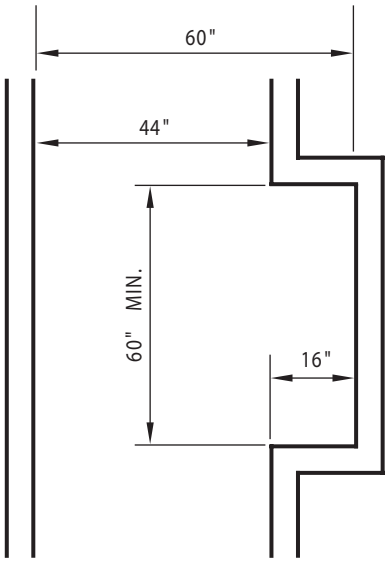

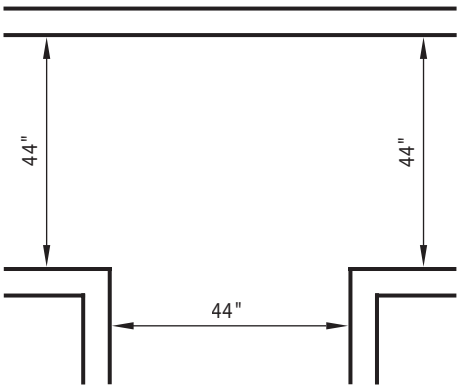

PASSING ALCOVES FOR CORRIDORS OVER
200' IN LIEU OF 60" MIN. WIDTH

THESE DIAGRAMS ILLUSTRATE THE SPECIFIC REQUIREMENTS OF THESE REGULATIONS AND ARE INTENDED ONLY AS AN AID FOR BUILDING DESIGN AND CONSTRUCTION.

FIGURE 11A-1L—CORRIDOR OVER 200 FEET (60 960 mm)

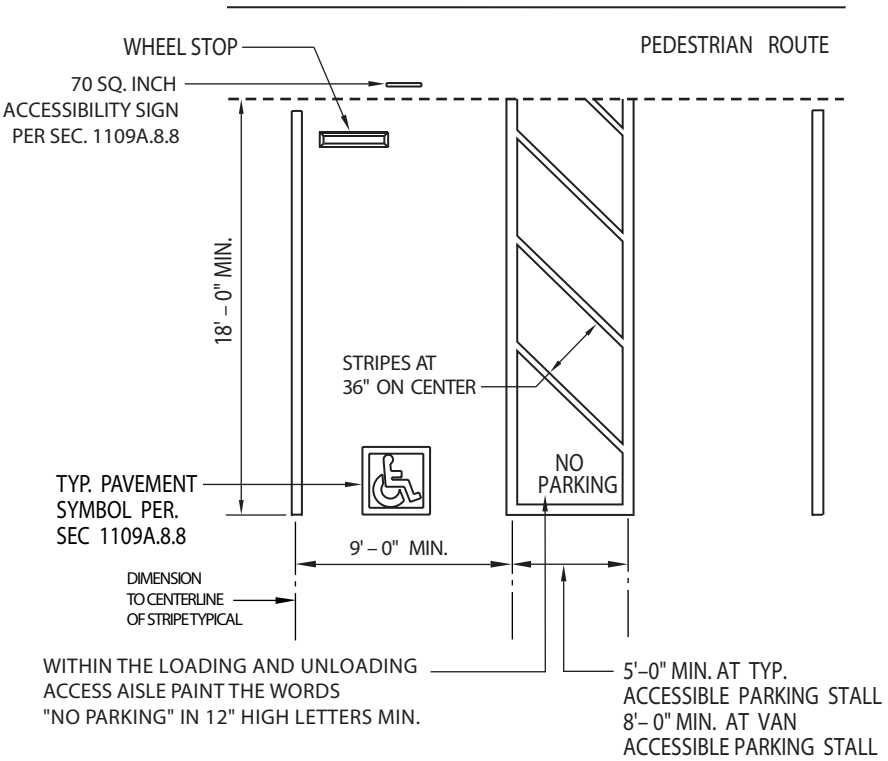

FIGURE 11A-2B—~~DIAGONAL~~ SINGLE AND VAN ACCESSIBLE PARKING STALLS

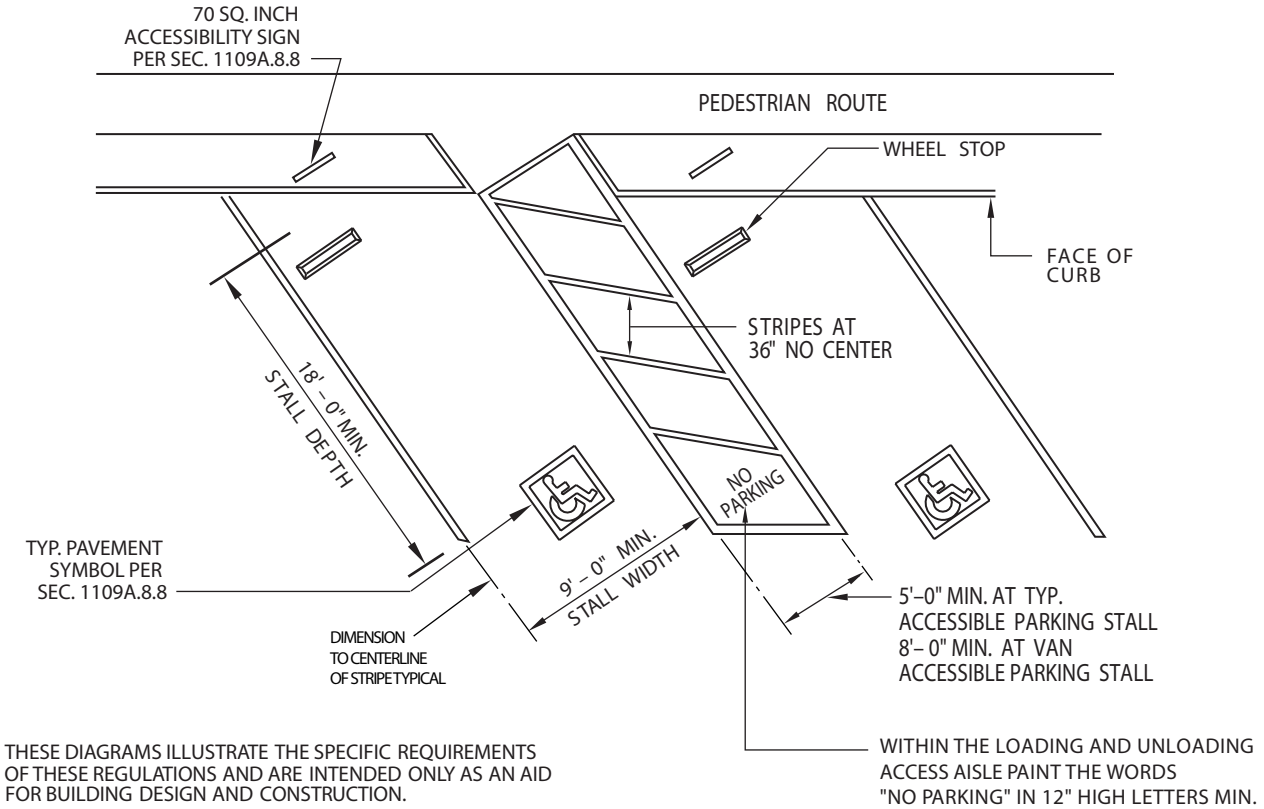

FIGURE 11A-2C—DIAGONAL PARKING STALLS

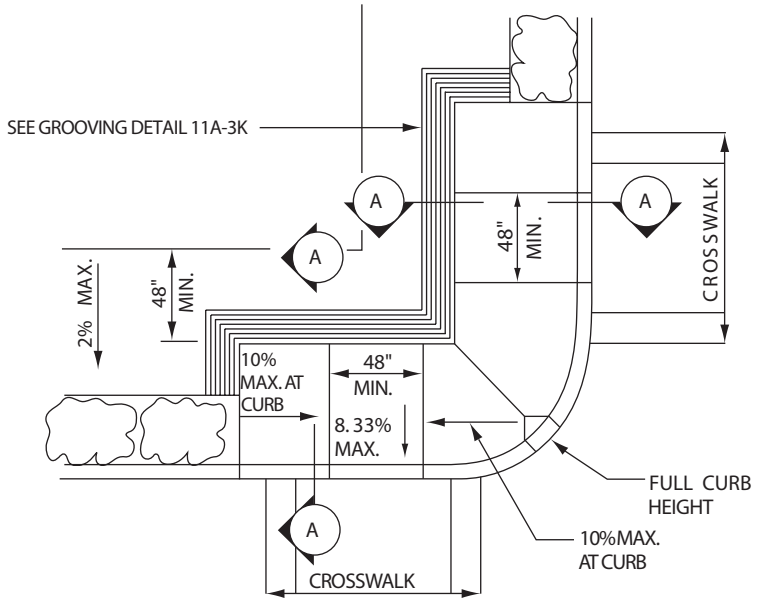

FIGURE 11A-3D—CURB DETAIL

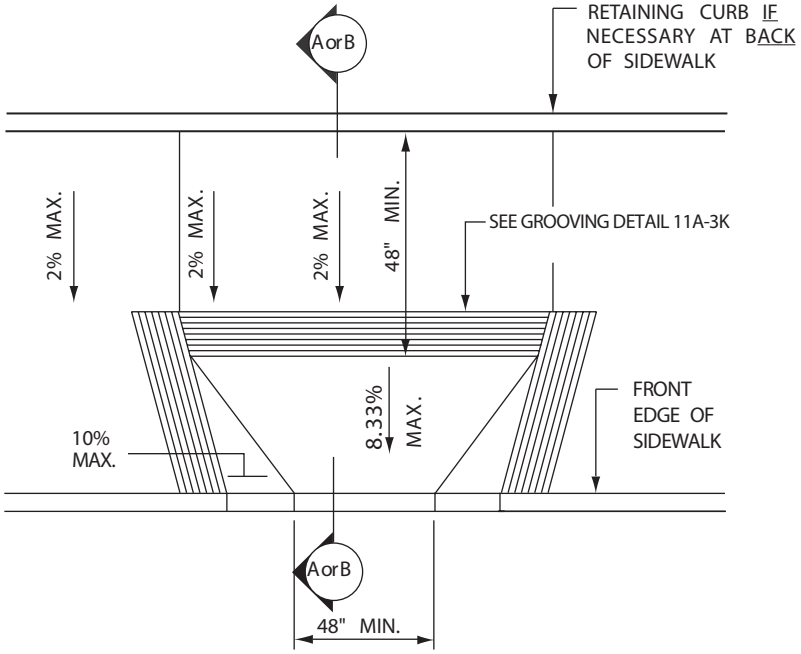

FIGURE 11A-3E—CURB DETAIL

THESE DIAGRAMS ILLUSTRATE THE SPECIFIC REQUIREMENTS OF THESE REGULATIONS AND ARE INTENDED ONLY AS AN AID FOR BUILDING DESIGN AND CONSTRUCTION.

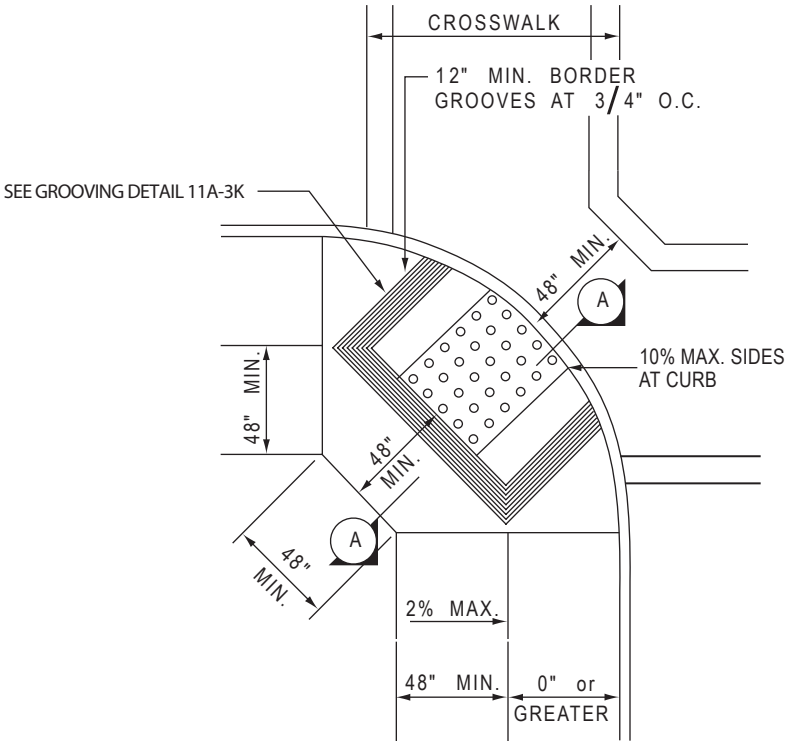

FIGURE 11A-3H—CURB DETAIL

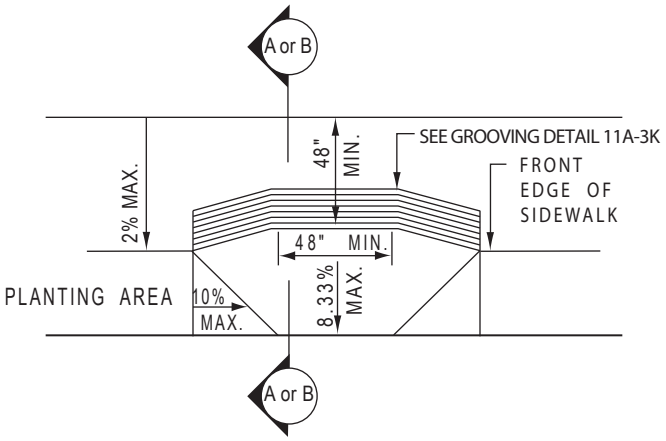

FIGURE 11A-3I—CURB DETAIL

THESE DIAGRAMS ILLUSTRATE THE SPECIFIC REQUIREMENTS OF THESE REGULATIONS AND ARE INTENDED ONLY AS AN AID FOR BUILDING DESIGN AND CONSTRUCTION.

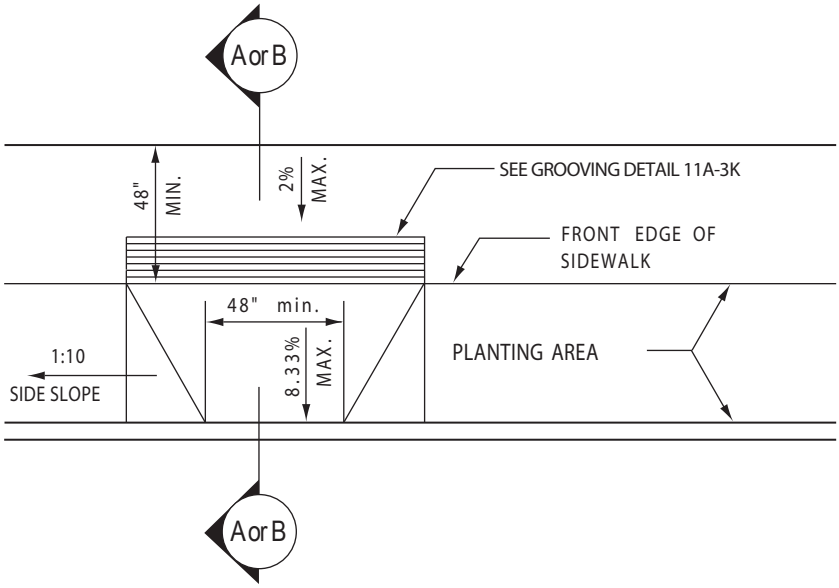

FIGURE 11A-3J—CURB DETAIL

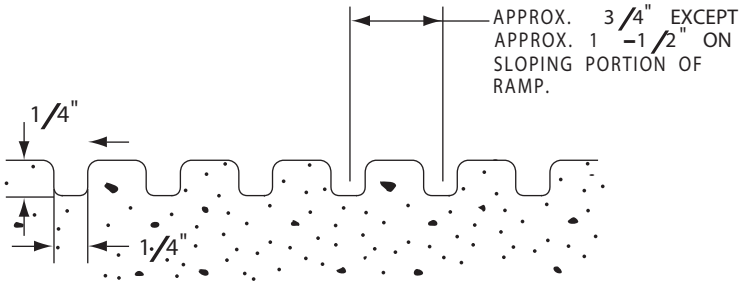

GROOVING DETAIL

FIGURE 11A-3K—CURB DETAIL

THESE DIAGRAMS ILLUSTRATE THE SPECIFIC REQUIREMENTS OF THESE REGULATIONS AND ARE INTENDED ONLY AS AN AID FOR BUILDING DESIGN AND CONSTRUCTION.

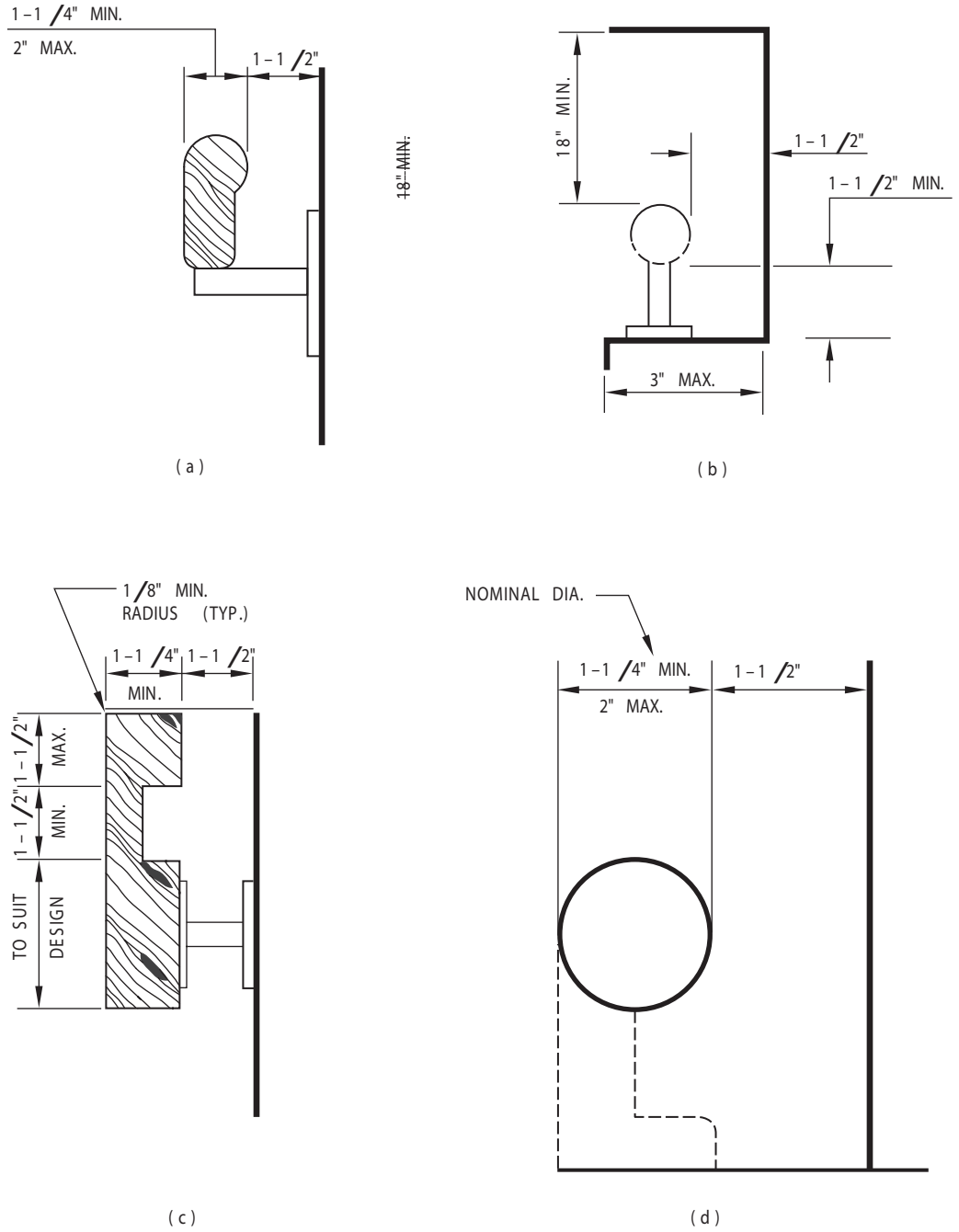

THESE DIAGRAMS ILLUSTRATE THE SPECIFIC REQUIREMENTS OF THESE REGULATIONS AND ARE INTENDED ONLY AS AN AID FOR BUILDING DESIGN AND CONSTRUCTION.

FIGURE 11A-6B—STAIR HANDRAILS

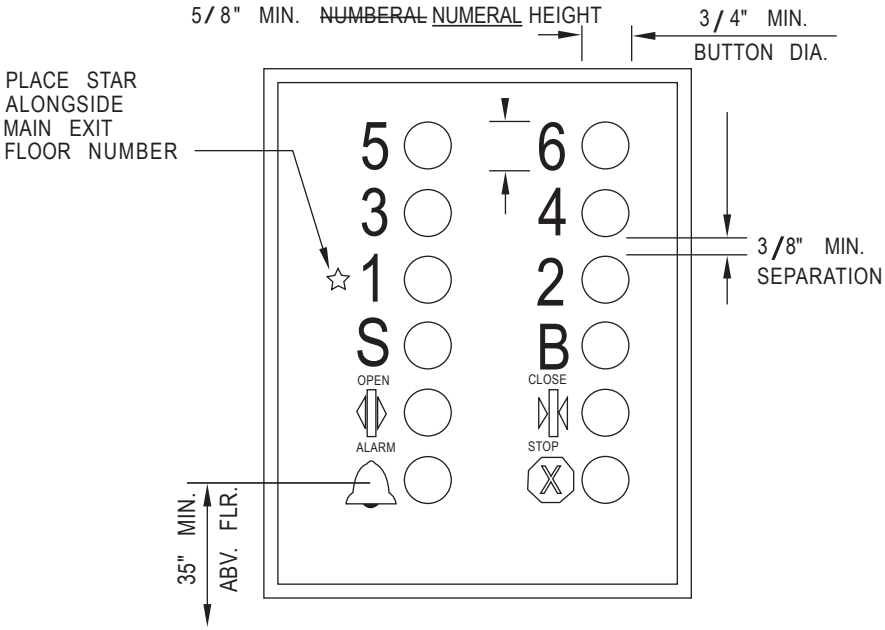

(a) ELEVATOR CONTROL PANEL DETAIL

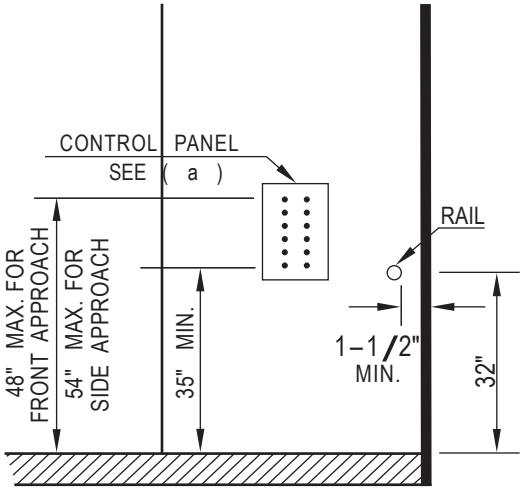

(b) MAXIMUM INSTALLATION HEIGHTS ABOVE CAB FLOOR

THIS DIAGRAM ILLUSTRATES THE SPECIFIC REQUIREMENTS OF THESE REGULATIONS AND IS INTENDED ONLY AS AN AID FOR BUILDING DESIGN AND CONSTRUCTION.

FIGURE 11A-7B—ELEVATOR CONTROL PANEL

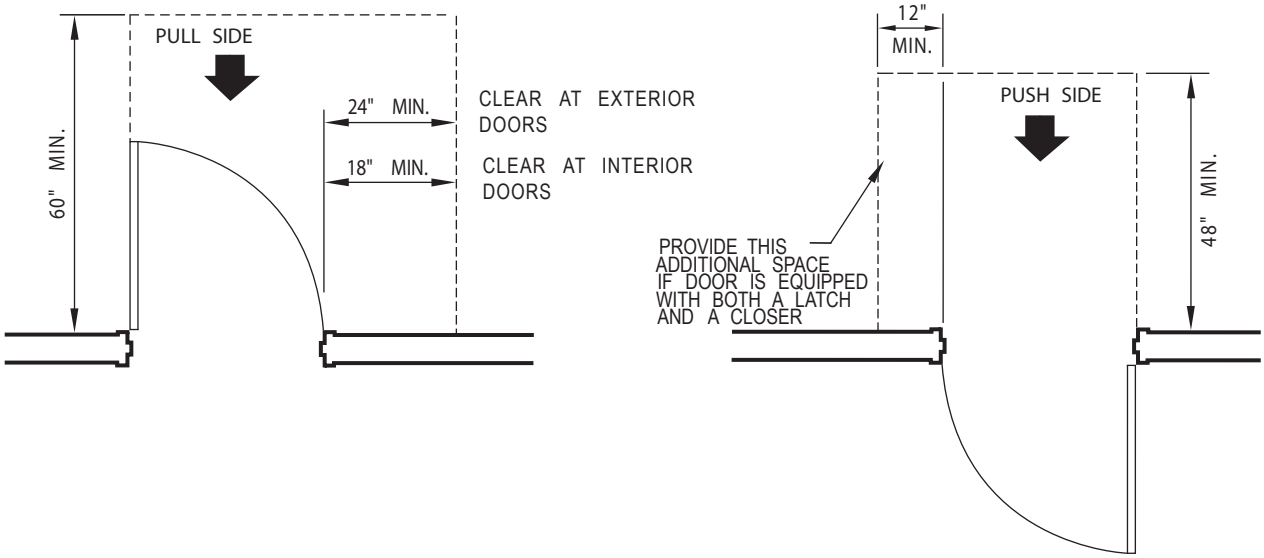

FIGURE 11A-8A—FRONT APPROACHES - SWINGING DOORS

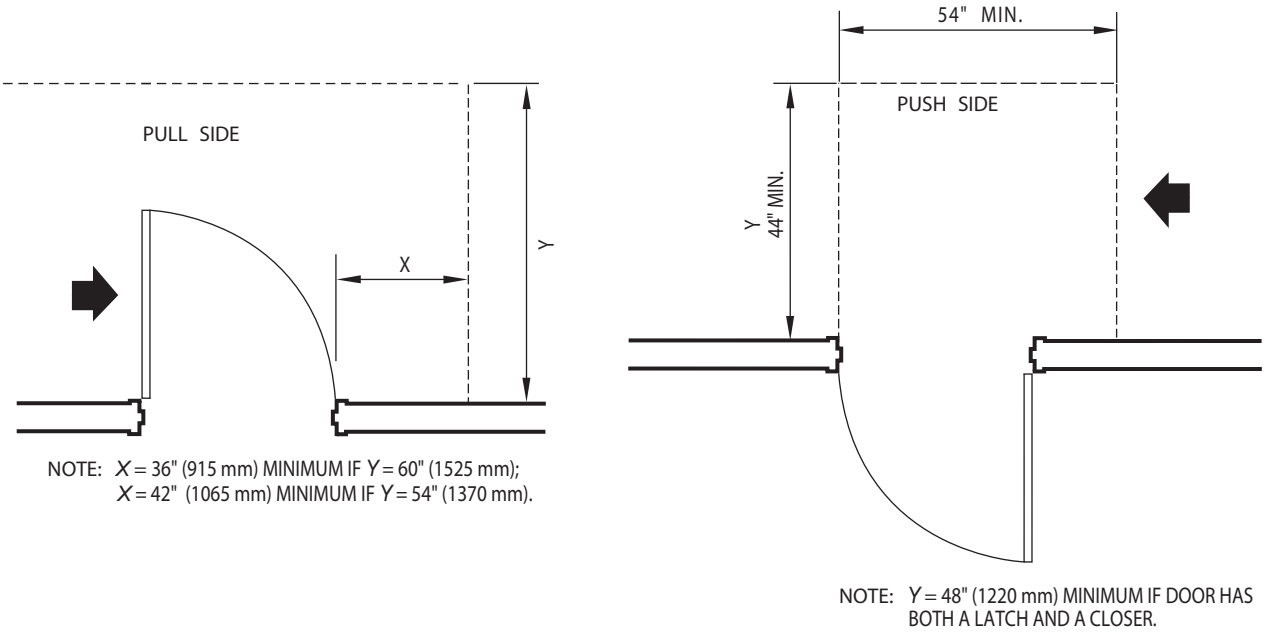

FIGURE 11A-8B—HINGE SIDE APPROACHES - ~~SWINING~~ SWINGING DOORS

THESE DIAGRAMS ILLUSTRATE THE SPECIFIC REQUIREMENTS OF THESE REGULATIONS AND ARE INTENDED ONLY AS AN AID FOR BUILDING DESIGN AND CONSTRUCTION.

LEVEL MANEUVERING CLEARANCE AT DOORS