FINAL EXPRESS TERMS
FOR
PROPOSED BUILDING STANDARDS
OF THE
DIVISION OF THE STATE ARCHITECT (DSA-AC)

REGARDING THE CALIFORNIA BUILDING CODE
CALIFORNIA CODE OF REGULATIONS, TITLE 24, PART 2

2013 CALIFORNIA BUILDING CODE

The California Building Standards Code (California Code of Regulations, Title 24, Part 1, 2, 3, 4, 5, 6, 7, 8, 9, 10, 11, and 12) is published in its entirety every three years and is applicable to all buildings for which an application for a building permit is made during the Code's effective period. Each triennial edition of the California Building Standards Code becomes effective 180 days after its publication.

These DSA-AC proposed regulations will update the California Code of Regulations, Title 24, Part 2 by:

- Repealing DSA-AC's adoption of the 2009 edition International Building Code;
- Repealing DSA-AC's adoption of the 2010 California Building Code, Chapter 11A - Housing Accessibility, with the exception of Division IV, which will be retained;
- Repealing DSA-AC's adoption of the 2010 California Building Code, Chapter 11B - Accessibility to Public Buildings, Public Accommodations, Commercial Buildings and Publicly Funded Housing;
- Repealing DSA-AC's adoption of the 2010 California Building Code Chapter 11C - Standards for Card Readers at Gasoline Fuel Dispensing Facilities;
- Adopting selected portions of the 2012 edition International Building Code (2012 IBC) published by the International Code Council;
- Adopting those portions of the 2010 Americans with Disabilities Act Standards for Accessible Design (2010 ADAS) federal regulations, as adopted by the U.S. Department of Justice and known as the 2010 Standards for Title II and Title III Facilities: 2004 Americans with Disabilities Act Accessibility Guidelines (2010 ADAS/2004 ADAAG), as the model code for the accessibility provisions of the 2013 California Building Code Chapter 11B Accessibility to Public Buildings, Public Accommodations, Commercial Buildings and Public Housing;
- Amending the selected portions of the IBC and the 2010 ADAS/2004 ADAAG with provisions from the 2010 Standards for State and Local Government Facilities: Title II regulations at 28 CFR part 35.151 (Title II Regulations), as adopted by the U.S. Department of Justice;
- Amending the selected portions of the IBC and the 2010 ADAS/2004 ADAAG with provisions from the 2010 Standards for Public Accommodations and Commercial Facilities: Title III regulations at 28 CFR part 36, subpart D (Title III Regulations), as adopted by the U.S. Department of Justice.
- Amending the selected portions of the IBC and the 2010 ADAS/2004 ADAAG with provisions equivalent to those from the 2010 California Building Code Chapters 11A, 11B and 11C that provide greater accessibility: and
- Amending selected portions of the IBC and the 2010 ADAS/2004 ADAAG to implement California state statutory mandates.

DSA proposes these actions to comply with state law requiring state agencies to propose adoption of the latest edition model codes within one year of their publication date.

LEGEND FOR FINAL EXPRESS TERMS (combination of 45-Day and 15-Day changes)

1. For 45-Day and 15-Day changes, existing California amendments or code language being modified appears in *italics*, with modified language <u>underlined</u>.
2. For 45-Day and 15-Day changes, repealed text appears in ~~strikeout~~.

CHAPTER 1
SCOPE AND ADMINISTRATION

TOPIC 1.0

CHAPTER 1, DIVISION 1 – MATRIX ADOPTION TABLE

Adopting Agency		DSA-AC
Adopt entire California Chapter		
Adopt entire California Chapter as amended (amended Sections listed below)		
Adopt only those Sections that are listed below		X
Chapter / Section	Codes	
Division I		
1.1	CA	X
1.9.1 – 1.9.1.8	CA	X
Division II – Scope and Administration		
101.1 – 101.4.5	CA	X
111.2	IBC	X

CHAPTER 1
SCOPE AND ADMINISTRATION

DIVISION I
CALIFORNIA ADMINISTRATION

TOPIC 1.1

SECTION 1.1
GENERAL

1.1.1 Title. These regulations shall be known as the California Building Code, may be cited as such and will be referred to herein as "this code." The California Building Code is Part 2 of twelve parts of the official compilation and publication of the adoption, amendment and repeal of building regulations to the California Code of Regulations, Title 24, also referred to as the California Building Standards Code. This part incorporates by adoption the ~~2009~~ 2012 International Building Code of the International Code Council with necessary California amendments.

1.1.2 Purpose. The purpose of this code is to establish the minimum requirements to safeguard the public health, safety and general welfare through structural strength, means of egress facilities, stability, access to persons with disabilities, sanitation, adequate lighting and ventilation, and energy conservation; safety to life and property from fire and other hazards attributed to the built environment; and to provide safety to fire fighters and emergency responders during emergency operations.

1.1.3 Scope. The provisions of this code shall apply to the construction, alteration, movement, enlargement, replacement, repair, equipment, use and occupancy, location, maintenance, removal and demolition of every building or structure or any appurtenances connected or attached to such buildings or structures throughout the State of California.

1.1.3.1 Nonstate-regulated buildings, structures, and applications. Except as modified by local ordinance pursuant to Section 1.1.8, the following standards in the California Code of Regulations, Title 24, Parts 2, 2.5, 3, 4, 5, 6, 9, 10 and 11 shall apply to all occupancies and applications not regulated by a state agency.

1.1.3.2 State-regulated buildings, structures, and applications. The model code, state amendments to

the model code, and/or state amendments where there are no relevant model code provisions shall apply to the following buildings, structures, and applications regulated by state agencies ~~as referenced in the Matrix Adoption Tables and~~ as specified in Sections 1.2 through 1.14, except where modified by local ordinance pursuant to Section 1.1.8. When adopted by a state agency, the provisions of this code shall be enforced by the appropriate enforcing agency, but only to the extent of authority granted to such agency by the state legislature.

Note: See Preface to distinguish the model code provisions from the California provisions.

1. *State-owned buildings, including buildings constructed by the Trustees of the California State University, and to the extent permitted by California laws, buildings designed and constructed by the Regents of the University of California, and regulated by the Building Standards Commission. See Section 1.2 for additional scope provisions.*

2. *Local detention facilities regulated by the Corrections Standards Authority. See Section 1.3 for additional scope provisions.*

3. *Barbering, cosmetology or electrolysis establishments, acupuncture offices, pharmacies, veterinary facilities, and structural pest control locations regulated by the Department of Consumer Affairs. See Section 1.4 for additional scope provisions.*

4. *Energy efficiency standards regulated by the California Energy Commission. See Section 1.5 for additional scope provisions.*

5. *Dairies and places of meat inspection regulated by the Department of Food and Agriculture. See Section 1.6 for additional scope provisions.*

6. *Organized camps, laboratory animal quarters, public swimming pools, radiation protection, commissaries serving mobile food preparation vehicles and wild animal quarantine facilities regulated by the Department of Public Health. See Section 1.7 for additional scope provisions.*

7. *Hotels, motels, lodging houses, apartment houses, dwellings, dormitories, condominiums, shelters for homeless persons, congregate residences, employee housing, factory-built housing and other types of dwellings containing sleeping accommodations with or without common toilets or cooking facilities. See Section 1.8.2.1.1 for additional scope provisions.*

8. *Accommodations for persons with disabilities in buildings containing newly constructed covered multifamily dwellings, new common use spaces serving existing covered multifamily dwellings, additions to existing buildings where the addition alone meets the definition of "COVERED MULTIFAMILY DWELLINGS," and common-use spaces serving covered multifamily dwellings which are regulated by the Department of Housing and Community Development. See Section 1.8.2.1.2 for additional scope provisions.*

9. *Permanent buildings and permanent accessory buildings or structures constructed within mobile home parks and special occupancy parks regulated by the Department of Housing and Community Development. See Section 1.8.2.1.3 for additional scope provisions.*

10. *Accommodations for persons with disabilities regulated by the Division of the State Architect. See Section 1.9.1 for additional scope provisions.*

11. *Public elementary and secondary schools, community college buildings and state-owned or state-leased essential service buildings regulated by the Division*

of the State Architect. See Section 1.9.2 for additional scope provisions.

12. *Reserved for the State Historical Building Safety Board with the Division of the State Architect. See Section 1.9.3 for additional scope provisions.*

13. *General acute care hospitals, acute psychiatric hospitals, skilled nursing and/or intermediate care facilities, clinics licensed by the Department of Public Health and correctional treatment centers regulated by the Office of Statewide Health Planning and Development. See Section 1.10 for additional scope provisions.*

14. *Applications regulated by the Office of State Fire Marshal include but are not limited to the following in accordance with Section 1.11.*

    14. 1. Buildings or structures used or intended for use as an:

        1. *Asylum, jail.*

        2. *Mental hospital, hospital, home for the elderly, children's nursery, children's home or institution, school or any similar occupancy of any capacity.*

        3. *Theater, dancehall, skating rink, auditorium, assembly hall, meeting hall, nightclub, fair building or similar place of assemblage where 50 or more persons may gather together in a building, room or structure for the purpose of amusement, entertainment, instruction, deliberation, worship, drinking or dining, awaiting transportation, or education.*

        4. *Small family day care homes, large family day-care homes, residential facilities and residential facilities for the elderly, residential care facilities.*

        5. *State institutions or other state-owned or state-occupied buildings*

        6. *High rise structures.*

        7. *Motion picture production studios.*

        8. *Organized camps.*

        9. *Residential structures.*

    14. 2. Tents, awnings or other fabric enclosures used in connection with any occupancy.

    14.3. Fire alarm devices, equipment and systems in connection with any occupancy.

    14.4. Hazardous materials, flammable and combustible liquids.

    14.5. Public school automatic fire detection, alarm, and sprinkler systems.

    14.6. Wildland-urban interface fire areas.

15. *Public libraries constructed and renovated using funds from the California Library Construction and Renovation Bond Act of 1988 and regulated by the State Librarian. See Section 1.12 for additional scope provisions.*

16. *Graywater systems regulated by the Department of Water Resources. See Section 1.13 for additional scope provisions.*

17. *For applications listed in Section 1.9.1 regulated by the Division of the State Architect – Access Compliance, outdoor environments and uses shall be classified according to accessibility uses described in Chapter ~~11A,~~ 11B ~~and 11C~~.*

18. *Marine Oil Terminals regulated by the California State Lands Commission. See Section 1.14 for additional scope provisions.*

1.1.4 Appendices. Provisions contained in the appendices of this code shall not apply unless specifically adopted by a state agency or adopted by a local enforcing agency in compliance with Health and Safety Code Section 18901 et. seq. for Building Standards Law, Health and Safety Code Section 17950 for State Housing Law and Health and Safety Code Section 13869.7 for Fire Protection Districts. See Section 1.1.8 of this code.

1.1.5 Referenced codes. The codes, standards and publications adopted and set forth in this code, including other codes, standards and publications referred to therein are, by title and date of publication, hereby adopted as standard reference documents of this code. When this code does not specifically cover any subject related to building design and construction, recognized architectural or engineering practices shall be employed. The National Fire Codes, standards, and the Fire Protection Handbook of the National Fire Protection Association are permitted to be used as authoritative guides in determining recognized fire prevention engineering practices.

1.1.6 Nonbuilding standards, orders and regulations. Requirements contained in the International Building Code, or in any other referenced standard, code or document, which are not building standards as defined in Health and Safety Code Section 18909, shall not be construed as part of the provisions of this code. For nonbuilding standards, orders, and regulations, see other titles of the California Code of Regulations.

1.1.7 Order of precedence and use.

1.1.7.1 Differences. In the event of any differences between these building standards and the standard reference documents, the text of these building standards shall govern.

1.1.7.2 Specific provisions. Where a specific provision varies from a general provision, the specific provision shall apply.

1.1.7.3 Conflicts. When the requirements of this code conflict with the requirements of any other part of the California Building Standards Code, Title 24, the most restrictive requirements shall prevail.

1.1.8 City, county or city and county amendments, additions or deletions. The provisions of this code do not limit the authority of city, county, or city and county governments to establish more restrictive and reasonably necessary differences to the provisions contained in this code pursuant to complying with Section 1.1.8.1. The effective date of amendments, additions or deletions to this code by a city, county, or a city and county filed pursuant to Section 1.1.8.1 shall be the date filed. However, in no case shall the amendments, additions or deletions to this code be effective any sooner than the effective date of this code.

Local modifications shall comply with Health and Safety Code Section 18941.5 for Building Standards Law or health and Safety Code Section 13869.7 for Fire Protection Districts.

1.1.8.1 Findings and filings.

1. *The city, county, or city and county shall make express findings for each amendment, addition or deletion based upon climatic, topographical or geological conditions.*

   Exception: Hazardous building ordinances and programs mitigating unreinforced masonry buildings.

2. *The city, county, or city and county shall file the amendments, additions or deletions expressly marked and identified as to the applicable findings. Cities, counties, cities and counties, and fire departments shall file the amendments, additions or deletions, and the findings with the California Building Standards Commission at 2525 Natomas Park Drive, Suite 130, Sacramento, CA 95833.*

3. *Findings prepared by fire protection districts shall be ratified by the local city, county, or city and county and filed with the California Department of Housing and Community Development, Division of Codes and Standards, P.O. Box 1407, Sacramento, CA 95812-1407 or 1800 3rd Street, Room 260, Sacramento, CA 95811.*

1.1.9 Effective date of this code. Only those standards approved by the California Building Standards Commission that are effective at the time an application for building permit is submitted shall apply to the plans and specifications for, and to the construction performed under, that permit. For the effective dates of the provisions contained in this code, see the History Note page of this code.

1.1.10 Availability of codes. At least one complete copy each of Titles 8, 19, 20, 24, and 25 with all revisions shall be maintained in the office of the building official responsible for the administration and enforcement of this code. Each state department concerned and each city, county or city and county shall have an up-to-date copy of the code available for public inspection, See Health and Safety Code Section 18942 (d) (1) and (2).

1.1.11 Format. This part fundamentally adopts the International Building Code by reference on a chapter-by-chapter basis. ~~Such adoption is reflected in the Matrix Adoption Table of each chapter of this part. When the Matrix Adoption Tables make no reference to a specific chapter of the International Building Code such chapter of the International Building Code is not adopted as a portion of this code.~~

When a specific chapter of the International Building Code is not printed in the code and is marked "Reserved" such chapter of the International Building Code is not adopted as a portion of this code. When a specific chapter of the International Building Code is marked "Not adopted by the State of California" but appears in the code, it may be available for adoption by local ordinance.

Note: Matrix Adoption Tables at the front of each chapter may aid the code user in determining which chapter or sections within a chapter are applicable to buildings under the authority of a specific state agency, but they are not to be considered regulatory.

1.1.12 Validity. If any chapter, section, subsection, sentence, clause or phrase of this code is for any reason held to be unconstitutional, contrary to statute, exceeding the authority of the state as stipulated by statutes or otherwise inoperative, such decision shall not affect the validity of the remaining portion of this code.

TOPIC 1.2

SECTION 1.9 - DIVISION OF THE STATE ARCHITECT

1.9.1 Division of the State Architect — Access Compliance.

General. The purpose of this code is to ensure that barrier-free design is incorporated in all buildings, facilities, site work and other improvements to which this code applies in compliance with state law to ensure that these improvements are accessible to and usable by persons with disabilities. Additions, alterations and structural repairs in all buildings and facilities shall comply with these provisions for new buildings, except as otherwise provided and specified herein.

The provisions of these regulations shall apply to any portable buildings leased or owned by a school district, and shall also apply to temporary and emergency buildings and facilities. Temporary buildings and facilities are not of permanent construction but are extensively used or are essential for public use for a period of time. Examples of temporary buildings or facilities covered include, but are not limited to: reviewing stands, temporary classrooms, bleacher areas, exhibit areas, temporary banking facilities, temporary health screening services, or temporary safe pedestrian passageways around a construction site.

In addition, to incorporate standards at least as restrictive as those required by the federal government for barrier-free design under (1) Title III (Public Accommodations and Commercial Facilities), Subpart D (New Construction and Alteration) ~~and Appendix A (Americans with Disabilities Act Standards for Accessible Design)~~ (see 28 C.F.R., Part 36), and (2) Title II (Public Entities), Section 35.151 (New Construction and Alterations) (see 28 C.F.R., Part 35) both from the Americans with Disabilities Act of 1990, 2004 Americans with Disabilities Act Accessibility Guidelines, as adopted by the US Department of Justice (see 36 C.F.R. Part 1191, Appendices B and D), and (3) under the Fair Housing Amendments Act of 1988. Some of these regulations may be more stringent than state law in order to meet the federal requirement.

1.9.1.1 Application. See Government Code commencing with Section 4450.

Publicly funded buildings, structures, sidewalks, curbs and related facilities shall be accessible to and usable by persons with disabilities as follows:

1.9.1.1.1 All buildings, structures, sidewalks, curbs and related facilities constructed in the state by the use of state, county or municipal funds, or the funds of any political subdivision of the state.

1.9.1.1.2 All buildings, structures and facilities that are leased, rented, contracted, sublet or hired by any municipal, county, or state division of government, or by a special district.

1.9.1.1.3 All publicly funded buildings used for congregate residences or for one- or two-family dwelling unit purposes shall conform to the provisions applicable to living accommodations.

1.9.1.1.4 All existing publicly funded buildings and facilities when alterations, structural repairs or additions are made to such buildings or facilities. For detailed requirements on existing buildings, see Chapter 11B, Division ~~IV~~ 2, Section 11B-202.

1.9.1.1.5 With respect to buildings, structures, sidewalks, curbs and related facilities not requiring a building permit, building standards published in the California Building Standards Code relating to access for persons with disabilities and other regulations adopted pursuant to Government Code Section 4450, and in effect at the time construction is commenced, shall be applicable.

1.9.1.2 Application. See Health and Safety Code commencing with Section 19952.

All privately funded public accommodations, as defined and commercial facilities, as defined, shall be accessible to persons with disabilities as follows:

Exception: Certain types of privately funded multistory buildings do not require installation of an elevator to provide access above and below the first floor. See Chapter 11B.

1.9.1.2.1 Any building, structure, facility, complex or improved area, or portions thereof, which are used by the general public.

1.9.1.2.2 Any sanitary facilities which are made available for the public, clients or employees in such accommodations or facilities.

1.9.1.2.3 Any curb or sidewalk intended for public use that is constructed in this state with private funds.

1.9.1.2.4 All existing privately funded public accommodations when alterations, structural repairs or additions are made to such public accommodations as set forth under Chapter 11B.

1.9.1.3 Application — public housing and private housing available for public use. See Government

Code Sections 4450 and 12955.1~~(d)~~(c).

1.9.1.4 Enforcing agency.

1.9.1.4.1 The director of the Department of General Services where state funds are utilized for any project or where funds of counties, municipalities or other political subdivisions are utilized for the construction of elementary, secondary or community college projects.

1.9.1.4.2 The governing bodies where funds of counties, municipalities or other political subdivisions are utilized except as otherwise provided above.

1.9.1.4.3 The building department of every city, county, or city and county within the territorial area of its city, county, or city and county, where private funds are utilized. "Building department" means the department, bureau or officer charged with the enforcement of laws or ordinances regulating the erection or construction, or both the erection and construction, of buildings.

1.9.1.5 Special conditions for persons with disabilities requiring appeals action ratification. Whenever reference is made in these regulations to this section, the findings and determinations required to be rendered by the local enforcing agency shall be subject to ratification through an appeals process.

1.9.1.6 Authority cited. Government Code Section 4450.

1.9.1.7 Reference cited. Government Code Sections 4450 through 4461, 12955.1~~(d)~~(c) and Health and Safety Code Sections 18949.1, 19952 through 19959.

1.9.1.8 Adopting agency identification. The provision of this code applicable to buildings identified in this Subsection 1.9.1 will be identified in the Matrix Adoption Tables under the acronym DSA-AC.

TOPIC 1.3

CHAPTER 1

DIVISION II
SCOPE AND ADMINISTRATION

Note: Sections adopted or amended by state agencies are specifically indicated by an agency banner or ~~identified~~ indicated in the Matrix Adoption Table.

PART 1—SCOPE AND APPLICATION

SECTION 101
GENERAL

101.1 Title. These regulations shall be known as the *California* Building Code of *the State of California,* ~~[NAME OF JURISDICTION],~~ hereinafter referred to as "this code."

101.2 Scope. The provisions of this code shall apply to the construction, alteration, relocation, enlargement, replacement, repair, equipment, use and occupancy, location, maintenance, removal and demolition of every building or structure or any appurtenances connected or attached to such buildings or structures.

Exception: Detached one- and two-family dwellings and multiple single-family dwellings (townhouses) not more than three stories above grade plane in height with a separate means of egress and their accessory structures shall comply with the ~~International~~ *California* Residential Code.

101.2.1 Appendices. Provisions in the appendices shall not apply unless specifically adopted.

101.3 Intent. The purpose of this code is to establish the minimum requirements to safeguard the public health, safety and general welfare through structural strength, means of egress facilities, stability, sanitation, adequate light and ventilation, energy conservation, and safety to life and property from fire and other hazards attributed to the built environment and to provide safety to fire fighters and emergency responders during emergency operations.

101.4 Referenced codes. The other codes listed in Sections 101.4.1 through 101.4.6 and referenced elsewhere in this code shall be considered part of the requirements of this code to the prescribed extent of each such reference.

101.4.1 Gas. The provisions of the ~~International Fuel Gas Code~~ *California Mechanical Code* shall apply to the installation of gas piping from the point of delivery, gas appliances and related accessories as covered in this code. These requirements apply to gas piping systems extending from the point of delivery to the inlet connections of appliances and the installation and operation of residential and commercial gas appliances and related accessories.

101.4.2 Mechanical. The provisions of the ~~International~~ *California* Mechanical Code shall apply to the installation, alterations, repairs and replacement of mechanical systems, including equipment, appliances, fixtures, fittings and/or appurtenances, including ventilating, heating, cooling, air-conditioning and refrigeration systems, incinerators and other energy-related systems.

101.4.3 Plumbing. The provisions of the ~~International~~ *California* Plumbing Code shall apply to the installation, alteration, repair and replacement of plumbing systems, including equipment, appliances, fixtures, fittings and appurtenances, and where connected to a water or sewage system and all aspects of a medical gas system. The provisions of the International Private Sewage Disposal Code shall apply to private sewage disposal systems.

101.4.4 Property maintenance. The provisions of the International Property Maintenance Code shall apply to existing structures and premises; equipment and facilities; light, ventilation, space heating, sanitation, life and fire safety hazards; responsibilities of owners, operators and occupants; and occupancy of existing premises and structures.

101.4.5 Fire prevention. The provisions of the ~~International~~ *California* Fire Code shall apply to matters affecting or relating to structures, processes and premises from the hazard of fire and explosion arising from the storage, handling or use of structures, materials or devices; from conditions hazardous to life, property or public welfare in the occupancy of structures or premises; and from the construction, extension, repair, alteration or removal of fire suppression, automatic sprinkler systems and alarm systems or fire hazards in the structure or on the premises from occupancy or operation.

101.4.6 Energy. The provisions of the ~~International~~ *California* Energy Conservation Code shall apply to all matters governing the design and construction of buildings for energy efficiency.

SECTION 111
CERTIFICATE OF OCCUPANCY

111.2 Certificate issued. After the building official inspects the building or structure and finds no violations of the provisions of this code or other laws that are enforced by the department of building safety, the building official shall issue a certificate of occupancy that contains the following:

1. The building permit number.

2. The address of the structure.

3. The name and address of the owner.

4. A description of that portion of the structure for which the certificate is issued.

5. A statement that the described portion of the structure has been inspected for compliance with the requirements of this code for the occupancy and division of occupancy and the use for which the proposed occupancy is classified.

6. The name of the building official.

7. The edition of the code under which the permit was issued.

8. The use and occupancy, in accordance with the provisions of Chapter 3.

9. The type of construction as defined in Chapter 6.

10. The design occupant load.

11. If an automatic sprinkler system is provided, whether the sprinkler system is required.

12. Any special stipulations and conditions of the building permit.

Notation
Authority: Government Code Section 4450. Reference(s): Government Code Section(s) 4450 through 4461, and 12955.1(c) and Health and Safety Code Sections 18949.1, 19952 through 19959.

TOPIC 2.0

CHAPTER 2 – MATRIX ADOPTION TABLE

Adopting Agency		DSA-AC
Adopt entire California Chapter		
Adopt entire California Chapter as amended (amended Sections listed below)		
Adopt only those Sections that are listed below		X
Chapter / Section	Codes	
202 Access aisle		X
202 Accessibility		X
202 Accessible		X
202 Accessible element		X
202 Accessible means of egress		X
202 Accessible route		X
~~202 Accessible route of travel~~		~~X~~
202 Accessible space		X
~~202 Adaptability~~		~~X~~
202 Adaptable		X
~~202 Adaptable dwelling unit~~		~~X~~
202 Addition		X
202 Administrative authority		X
202 Aisle		X
~~202 Aisle, employee areas~~		~~X~~
202 Alteration ~~(or Alter)~~		X
~~202 Alternate card reader~~		~~X~~
202 Amusement attraction		X
202 Amusement ride		X
202 Amusement ride seat		X
202 ANSI		X
202 Approved w/o Notes		X
202 Approved testing agency		X
202 Area of refuge		X
202 Area of sport activity		X
202 Assembly area		X
~~202 Assistive device~~		~~X~~
202 Assistive listening system (ALS)		X
202 Automatic door		X
202 Automatic Teller Machine (ATM)		X
202 Bathroom		X
202 Blended Transition		X
202 Boarding pier		X
202 Boat launch ramp		X
202 Boat slip		X
202 Building		X
~~202 Building entrance on an accessible route~~		~~X~~
~~202 Building, existing~~		~~X~~
202 Building official		X
202 Catch pool		X
202 CCR		X

202 Characters		X
202 Children's use		X
202 Circulation path		X
202 Clear		X
202 Clear floor space		X
202 Closed-circuit telephone		X
202 Commercial facilities		X
202 Common use		X
~~202 Common use areas~~		~~X~~
202 Comply with		X
~~202 Covered multifamily dwellings~~		~~X~~
202 Cross slope		X
202 Curb cut		X
202 Curb ramp		X
202 Detectable warning		X
202 Directional sign		X
202 Disability		X
~~202 Disabled~~		~~X~~
202 Dormitory		X
~~202 Dwelling unit~~		~~X~~
202 Element		X
202 Elevated play component		X
202 Elevator, passenger		X
202 Employee work area		X
202 Enforcing agency		X
202 Entrance		X
202 Equivalent facilitation		X
~~202 Existing building~~		~~X~~
202 Existing building or facility		X
202 Exit		X
202 Facility ~~(or facilities)~~		X
~~202 Free-standing pedestal~~		~~X~~
202 Functional area		X
202 Gangway		X
202 Golf car passage		X
202 Grab bar		X
202 Grade (adjacent ground elevation)		X
202 Grade Break		X
202 Ground floor		X
202 Ground level play component		X
202 Guard ~~(or guardrail)~~		X
202 Handrail		X
202 Health care provider		X
202 Historical Buildings		X
202 Housing at a place of education		X
202 If, If . . . Then		X
~~202 Independent entity~~		~~X~~
202 International Symbol of Accessibility		X
202 Key station		X
202 Kick plate		X
202 Kitchen or kitchenette		X
202 Lavatory		X
~~202 Level accessible area~~		~~X~~
~~202 Level area~~		~~X~~
~~202 Lift, platform (wheelchair)~~		~~X~~

202 Mail boxes		X
202 Marked crossing		X
202 May		X
202 Mezzanine		X
~~202 Multiple-accommodation toilet facility~~		~~X~~
~~202 Multistory dwelling unit~~		~~X~~
~~202 Newly constructed~~		~~X~~
202 NFPA		X
202 Nosing ~~(or nose)~~		X
202 Occupant load		X
202 Occupiable space		X
202 Open riser		X
202 Operable part		X
~~202 Passage door~~		~~X~~
202 Passenger elevator		X
202 Path of travel		X
202 Pedestrian		X
~~202 Pedestrian grade separation~~		~~X~~
~~202 Pedestrian ramp~~		~~X~~
202 Pedestrian way		X
202 Permanent		X
202 Permit		X
~~202 Persons with disabilities~~		~~X~~
202 Pictogram		X
202 Place of public accommodation		X
202 Platform		X
202 Platform (wheelchair) lift		X
202 Play area		X
202 Play component		X
202 Point-of-Sale Device		X
202 Powder room		X
202 Power-assisted door		X
202 Private building or facility		X
202 Professional office of a health care provider		X
~~202 Public accommodation~~		~~X~~
202 Public building or facility		X
202 Public entity		X
202 Public entrance		X
202 Public housing		X
202 Public use		X
202 Public-use areas		X
202 Public way		X
~~202 Qualified historical building (or property)~~		~~X~~
202 Qualified historic building or facility		X
202 Ramp		X
202 Reasonable portion		X
202 Recommend		X
202 Remodeling		X
202 Repair		X
202 Residential dwelling unit		X
202 Restricted entrance		X
202 Riser		X
202 Running slope		X
~~202 Sanitary facility~~		~~X~~
202 Self-service storage		X

202 Service entrance		X
202 Shall		X
202 Shopping center (or shopping mall)		X
202 Should		X
202 Sidewalk		X
202 Signage		X
~~202 Single-accommodation sanitary facility~~		~~X~~
202 Sink		X
202 Site		X
~~202 Site development~~		~~X~~
202 Sleeping accommodations		X
~~202 Slope~~		~~X~~
202 Soft contained play structure		X
202 Space		X
~~202 Special access lift~~		~~X~~
202 Specified public transportation		X
202 Stage		X
202 Stair		X
202 Stairway		X
202 Story		X
~~202 Story, first~~		~~X~~
202 Structural frame		X
202 Structure		X
202 Tactile		X
202 Tactile Sign		X
202 Technically infeasible		X
202 Teeing ground		X
202 Temporary		X
202 Text telephone		X
202 Transfer device		X
202 Transient lodging		X
202 Transit boarding platform		X
202 Transition plate		X
202 Tread		X
202 TTY		X
~~202 Type of motor fuel~~		~~X~~
202 Unreasonable hardship		X
202 Use zone		X
202 Valuation threshold		X
~~202 Vehicular or pedestrian arrival points~~		~~X~~
202 Vehicular way		X
202 Walk		X
202 Wet bar		X
202 Wheelchair		X
~~202 Wheelchair occupant (or wheelchair user)~~		~~X~~
202 Wheelchair space		X
202 Work station		X
202 Work area equipment		X

TOPIC 2.1

SECTION 202
DEFINITIONS

ACCESS AISLE. [DSA-AC] ~~See Chapter 11B, Section 1102B.~~ An accessible pedestrian space adjacent to

or between parking spaces that provides clearances in compliance with this code.

ACCESSIBILITY. [DSA-AC] ~~See Chapter 11A, Section 1107A.1-A, and Chapter 11B, Section 1102B.~~ Accessibility is the combination of various elements in a building, facility, site, or area, or portion thereof which allows access, circulation and the full use of the building and facilities by persons with disabilities in compliance with this code.

ACCESSIBLE. ~~A site, building, facility or portion thereof that complies with Chapter 11.~~
[DSA-AC] ~~See Chapter 11A, Section 1107A.1-A, and Chapter 11B, Section 1102B.~~ A site, building, facility, or portion thereof that is approachable and usable by persons with disabilities in compliance with this code.

ACCESSIBLE ELEMENT. [DSA-AC] ~~See Chapter 11B, Section 1102B.~~ Accessible element is an element specified by the regulations adopted by the Division of the State Architect-Access Compliance.

ACCESSIBLE MEANS OF EGRESS. A continuous and unobstructed way of egress travel from any accessible point in a building or facility to a public way.

ACCESSIBLE ROUTE. [DSA-AC] A continuous unobstructed path connecting accessible elements and spaces of an accessible site, building or facility that can be negotiated by a person with a disability using a wheelchair and that is also safe for and usable by persons with other disabilities. Interior accessible routes may include corridors, hallways, floors, ramps, elevators and lifts. Exterior accessible routes may include parking access aisles, curb ramps, crosswalks at vehicular ways, walks, ramps and lifts.

~~ACCESSIBLE ROUTE OF TRAVEL. [DSA-AC] See Chapter 11B, Section 1102B.~~

ACCESSIBLE SPACE. [DSA-AC] ~~See Chapter 11B, Section 1102B.~~ A space that complies with the accessibility provisions of this code.

~~ADAPTABILITY. [DSA-AC] See Chapter 11B, Section 1102B.~~

ADAPTABLE. [DSA-AC] Capable of being readily modified and made accessible.

~~ADAPTABLE DWELLING UNIT. [DSA-AC] See Chapter 11A, Section 1107A.1-A.~~

ADDITION. …
[DSA-AC] ~~"Addition" is an extension, expansion, or increase in floor area or height of a building, facility or structure.~~ An expansion, extension, or increase in the gross floor area or height of a building or facility.

ADMINISTRATIVE AUTHORITY. [DSA-AC] ~~See Chapter 11B, Section 1102B.~~ A governmental agency that adopts or enforces regulations and guidelines for the design, construction, or alteration of buildings and facilities.

AISLE. …
[DSA-AC] ~~See Chapter 11B, Section 1102B.~~ A circulation path between objects such as seats, tables, merchandise, equipment, displays, shelves, desks, etc., that provides clearances in compliance with this code.

~~AISLE, EMPLOYEE AREAS. [DSA-AC] See Chapter 11B, Section 1102B.~~

ALTERATION ~~*or ALTER*~~. …
[DSA-AC] ~~"Alteration or Alter" is any change, addition or modification in construction or occupancy or structural repair or change in primary function to an existing structure made by, on behalf of, or for the use of a public accommodation or commercial facility. Alterations include, but are not limited to, remodeling, renovation, rehabilitation, reconstruction, historic restoration, changes or rearrangement of the structural parts or elements, and changes or rearrangement in the plan configuration of walls and full-height partitions.~~ A change, addition or modification in construction, change in occupancy or use, or structural repair to an existing building or facility. Alterations include, but are not limited to, remodeling, renovation,

rehabilitation, reconstruction, historic restoration, resurfacing of circulation paths or vehicular ways, changes or rearrangement of the structural parts or elements, and changes or rearrangement in the plan configuration of walls and full-height partitions. Normal maintenance, reroofing, painting or wallpapering, or changes to mechanical and electrical systems are not alterations unless they affect the usability of the building or facility.

~~ALTERNATE CARD READER. [DSA-AC] See Chapter 11C, Section 1101C.1.~~

AMUSEMENT ATTRACTION. [DSA-AC] Any facility, or portion of a facility, located within an amusement park or theme park which provides amusement without the use of an amusement device. Amusement attractions include, but are not limited to, fun houses, barrels, and other attractions without seats.

AMUSEMENT RIDE. [DSA-AC] A system that moves persons through a fixed course within a defined area for the purpose of amusement.

AMUSEMENT RIDE SEAT. [DSA-AC] A seat that is built-in or mechanically fastened to an amusement ride intended to be occupied by one or more passengers.

ANSI. [DSA-AC] The American National Standards Institute.

APPROVED. …
[DSA-AC] "Approved" means meeting the approval of the enforcing agency, except as otherwise provided by law, when used in connection with any system, material, type of construction, fixture or appliance as the result of investigations and tests conducted by the agency, or by reason of accepted principles or tests by national authorities or technical, health, or scientific organizations or agencies.

APPROVED TESTING AGENCY. [DSA-AC] Any agency, which is determined by the enforcing agency, except as otherwise provided by law, to have adequate personnel and expertise to carry out the testing of systems, materials, type of construction, fixtures or appliances.

AREA OF REFUGE. An area where persons unable to use stairways can remain temporarily to await instructions or assistance during emergency evacuation.

AREA OF SPORT ACTIVITY. [DSA-AC] That portion of a room or space where the play or practice of a sport occurs.

ASSEMBLY AREA. [DSA-AC] ~~See Chapter 11B, Section 1102B.~~ A building or facility, or portion thereof, used for the purpose of entertainment, educational or civic gatherings, or similar purposes. For the purposes of these requirements, assembly areas include, but are not limited to, classrooms, lecture halls, courtrooms, public meeting rooms, public hearing rooms, legislative chambers, motion picture houses, auditoria, theaters, playhouses, dinner theaters, concert halls, centers for the performing arts, amphitheaters, arenas, stadiums, grandstands, or convention centers.

~~ASSISTIVE DEVICE. [DSA-AC] See Chapter 11A, Section 1107A.1-A.~~

ASSISTIVE LISTENING SYSTEM (ALS). [DSA-AC] An amplification system utilizing transmitters, receivers, and coupling devices to bypass the acoustical space between a sound source and a listener by means of induction loop, radio frequency, infrared, or direct-wired equipment.

AUTOMATIC DOOR. [DSA-AC] ~~See Chapter 11A, Section 1107A.1-A, and Chapter 11B, Section 1102B.~~ A door equipped with a power operated mechanism and controls that open and close the door automatically upon receipt of a momentary actuating signal. The switch that begins the automatic cycle may be a photoelectric device, floor mat or manual switch.

~~AUTOMATED~~ AUTOMATIC TELLER MACHINE (ATM). [DSA-AC] ~~See Chapter 11B, Section 1102B.~~ Any electronic information processing device which accepts or dispenses cash in connection with a credit, deposit, or convenience account. The term does not include devices used solely to facilitate check guarantees or check authorizations, or which are used in connection with the acceptance or dispensing of

cash on a person-to-person basis, such as by a store cashier.

BATHROOM. [DSA-AC] ~~See Chapter 11A, Section 1107A.2-B.~~ For the purposes of Chapter 11B, a room which includes a water closet (toilet), a lavatory, and a bathtub and/or a shower. It does not include single-fixture facilities or those with only a water closet and lavatory. It does include a compartmented bathroom. A compartmented bathroom is one in which the fixtures are distributed among interconnected rooms. A compartmented bathroom is considered a single unit and is subject to the requirements of Chapter 11B.

BLENDED TRANSITION. [DSA-AC] A raised pedestrian street crossing, depressed corner, or similar connection between the pedestrian access route at the level of the sidewalk and the level of the pedestrian street crossing that has a grade of 5 percent or less.

BOARDING PIER. [DSA-AC] A portion of a pier where a boat is temporarily secured for the purpose of embarking or disembarking.

BOAT LAUNCH RAMP. [DSA-AC] A sloped surface designed for launching and retrieving trailered boats and other water craft to and from a body of water.

BOAT SLIP. [DSA-AC] That portion of a pier, main pier, finger pier, or float where a boat is moored for the purpose of berthing, embarking, or disembarking.

BUILDING. Any structure used or intended for supporting or sheltering any use or occupancy.

~~*BUILDING ENTRANCE ON AN ACCESSIBLE ROUTE. [DSA-AC] See Chapter 11A, Section 1107A.2-B.*~~

~~*BUILDING, EXISTING. [DSA-AC] A building erected prior to the adoption of this code, or one for which a legal building permit has been issued.*~~

BUILDING OFFICIAL. The officer or other designated authority charged with the administration and enforcement of this code, or a duly authorized representative.

CATCH POOL. [DSA-AC] A pool or designated section of a pool used as a terminus for water slide flumes.

CCR. [DSA-AC] The California Code of Regulations.

CHARACTERS. [DSA-AC] Letters, numbers, punctuation marks and typographic symbols.

CHILDREN'S USE. [DSA-AC] Describes spaces and elements specifically designed for use primarily by people 12 years old and younger.

CIRCULATION PATH. …
[DSA-AC] ~~See Chapter 11B, Section 1102B.~~ An exterior or interior way of passage provided for pedestrian travel, including but not limited to, walks, hallways, courtyards, elevators, platform lifts, ramps, stairways, and landings.

CLEAR. [DSA-AC] ~~See Chapter 11B, Section 1102B.~~ Unobstructed.

CLEAR FLOOR SPACE. [DSA-AC] ~~See Chapter 11B, Section 1102B.~~ The minimum unobstructed floor or ground space required to accommodate a single, stationary wheelchair and occupant.

CLOSED-CIRCUIT TELEPHONE. [DSA-AC] ~~See Chapter 11B, Section 1102B.~~ A telephone with a dedicated line such as a house phone, courtesy phone or phone that must be used to gain entry to a facility.

COMMERCIAL FACILITIES [DSA-AC] ~~Facilities that are intended for nonresidential use and whose operations will affect commerce, including factories, warehouses, office buildings, and other buildings in which employment may occur. Commercial facilities shall not include railroad locomotives, railroad freight~~

~~cars, railroad cabooses, railroad cars covered under Title II of the Americans with Disabilities Act of 1990, or facilities that are covered or expressly exempted from coverage under the Fair Housing Amendment Act of 1988 (42 USC 3601-3631, et seq.).~~ Facilities whose operations will affect commerce and are intended for non-residential use by a private entity. Commercial facilities shall not include (1) facilities that are covered or expressly exempted from coverage under the Fair Housing Act of 1968, as amended (42 U.S.C. 3601 - 3631); (2) aircraft; or (3) railroad locomotives, railroad freight cars, railroad cabooses, commuter or intercity passenger rail cars (including coaches, dining cars, sleeping cars, lounge cars, and food service cars), any other railroad cars described in Section 242 of the Americans With Disabilities Act or covered under Title II of the Americans With Disabilities Act, or railroad rights-of-way. For purposes of this definition, "rail" and "railroad" have the meaning given the term "railroad" in Section 202(e) of the Federal Railroad Safety Act of 1970 (45 U.S.C. 431(e)).

COMMON USE. Interior or exterior circulation paths, rooms, spaces or elements that are not for public use and are made available for the shared use of two or more people.

~~COMMON USE AREAS. [DSA-AC] See Chapter 11A, Section 1107A.3-C, and Chapter 11B, Section 1102B.~~

COMPLY WITH. [DSA-AC] ~~See Chapter 11B, Section 1102B.~~ Comply with means to meet one or more provisions of this code.

~~COVERED MULTIFAMILY DWELLINGS. [DSA-AC] See Chapter 11A, Section 1107A.3-C.~~

CROSS SLOPE. [DSA-AC] ~~See Chapter 11A, Section 1107A.3-C, and Chapter 11B, Section 1102B.~~ The slope that is perpendicular to the direction of travel.

CURB CUT. [DSA-AC] ~~See Chapter 11A, Section 1107A.3-C, and Chapter 11B, Section 1102B.~~ An interruption of a curb at a pedestrian way, which separates surfaces that are substantially at the same elevation.

CURB RAMP. [DSA-AC] ~~See Chapter 11A, Section 1107A.3-C, and Chapter 11B, Section 1102B.~~ A sloping pedestrian way, intended for pedestrian traffic, which provides access between a walk or sidewalk and a surface located above or below an adjacent curb face.

DETECTABLE WARNING. ...
[DSA-AC] ~~See Chapter 11A, Section 1107A.4-D, and Chapter 11B, Section 1102B.~~ A standardized surface feature built in or applied to walking surfaces or other elements to warn of hazards on a circulation path.

DIRECTIONAL SIGN. [DSA-AC] A publicly displayed notice which indicates by use of words or symbols a recommended direction or route of travel.

DISABILITY [DSA-AC] Disability is (1) a physical or mental impairment that limits one or more of the major life activities of an individual, (2) a record of such an impairment, or (3) being regarded as having such an impairment.

~~DISABLED. [DSA-AC] See "Disability".~~

DORMITORY. A space in a building where group sleeping accommodations are provided in one room, or in a series of closely associated rooms, for persons not members of the same family group, under joint occupancy and single management, as in college dormitories or fraternity houses.

DWELLING UNIT. …
~~[DSA-AC] See Chapter 11A, Section 1107A.4-D, and Chapter 11B, Section 1102B.~~

ELEMENT. [DSA-AC] ~~See Chapter 11B, Section 1102B.~~ An architectural or mechanical component of a building, facility, space or site.

ELEVATED PLAY COMPONENT. [DSA-AC] A play component that is approached above or below grade and that is part of a composite play structure consisting of two or more play components attached or functionally linked to create an integrated unit providing more than one play activity.

ELEVATOR, PASSENGER. [DSA-AC] ~~See Chapter 11B, Section 1102B.~~ An elevator used primarily to carry passengers.

EMPLOYEE WORK AREA. [DSA-AC] All or any portion of a space used only by employees and used only for work. Corridors, toilet rooms, kitchenettes and break rooms are not employee work areas.

ENFORCING AGENCY. [DSA-AC] The designated department or agency as specified by statute or regulation.

ENTRANCE. [DSA-AC] ~~See Chapter 11B, Section 1102B.~~ Any access point to a building or portion of a building or facility used for the purpose of entering. An entrance includes the approach walk, the vertical access leading to the entrance platform, the entrance platform itself, vestibule if provided, the entry door or gate, and the hardware of the entry door or gate.

EQUIVALENT FACILITATION. [DSA-AC] ~~See Chapter 11A, Section 1107A.5-E, and Chapter 11B, Section 1102B.~~ The use of designs, products, or technologies as alternatives to those prescribed, resulting in substantially equivalent or greater accessibility and usability.

> *Note: In determining equivalent facilitation, consideration shall be given to means that provide for the maximum independence of persons with disabilities while presenting the least risk of harm, injury or other hazard to such persons or others.*

~~EXISTING BUILDINGS. [DSA-AC] See "Building, Existing."~~

EXISTING BUILDING OR FACILITY. [DSA-AC] A facility in existence on any given date, without regard to whether the facility may also be considered newly constructed or altered under this code.

EXIT. That portion of a means of egress system between the exit access and the exit discharge or public way. Exit components include exterior exit doors at the level of exit discharge, interior exit stairways, interior exit ramps, exit passageways, exterior exit stairways and exterior exit ramps and horizontal exits.

FACILITY *~~(or FACILITIES)~~. …*
[DSA-AC] ~~See Chapter 11A, Section 1107A.6-F, and Chapter 11B, Section 1102B.~~ All or any portion of buildings, structures, site improvements, elements, and pedestrian routes or vehicular ways located on a site.

~~FREE-STANDING PEDESTAL. [DSA-AC] See Chapter 11C, Section 1101C.1.~~

FUNCTIONAL AREA. [DSA-AC] A room, space or area intended or designated for a group of related activities or processes.

GANGWAY. [DSA-AC] A variable-sloped pedestrian walkway that links a fixed structure or land with a floating structure. Gangways that connect to vessels are not addressed by this code.

GOLF CAR PASSAGE. [DSA-AC] A continuous passage on which a motorized golf car can operate.

GRAB BAR. [DSA-AC] ~~See Chapter 11A, Section 1107A.7-G, and Chapter 11B, Section 1102B.~~ A bar for the purpose of being grasped by the hand for support.

GRADE (Adjacent Ground Elevation) [DSA-AC] The lowest point of elevation of the finished surface of the ground, paving or sidewalk within the area between the building and the property line or, when the property line is more than 5 feet (1524 mm) from the building, between the building and a line 5 feet (1524 mm) from the building. See Health and Safety Code Section 19955.3 (d).

GRADE BREAK. [DSA-AC] The line where two surface planes with different ~~grades~~ slopes meet.

GROUND FLOOR. ~~[DSA-AC] See Chapter 11A, Section 1107A.7-G.~~ The floor of a building with a building entrance on an accessible route. A building may have one or more ground floors.

GROUND LEVEL PLAY COMPONENT. [DSA-AC] A play component that is approached and exited at the ground level.

GUARD ~~*[DSA-AC] or GUARDRAIL*~~. A building component or a system of building components located at or near the open sides of elevated walking surfaces that minimizes the possibility of a fall from the walking surface to a lower level.

HANDRAIL. A horizontal or sloping rail intended for grasping by the hand for guidance or support.

HEALTH CARE PROVIDER. [DSA-AC] See "Professional Office of a Health Care Provider" ~~in Chapter 11B, Section 1102B~~.

HISTORICAL BUILDINGS. [DSA-AC] See "Qualified historical building or property," C.C.R., Title 24, Part 8.

HOUSING AT A PLACE OF EDUCATION. [DSA-AC] Housing operated by or on behalf of an elementary, secondary, undergraduate, or postgraduate school, or other place of education, including dormitories, suites, apartments, or other places of residence.

IF, IF . . . THEN. [DSA-AC] ~~See Chapter 11B, Section 1102B.~~ The terms "if" and "if … then" denotes a specification that applies only when the conditions described are present.

~~*INDEPENDENT ENTITY [DSA-AC] is a not-for-profit product safety testing and certification organization, dedicated to testing for public safety. An independent entity would operate for the testing, certification and quality assessment of products, systems and services.*~~

INTERNATIONAL SYMBOL OF ACCESSIBILITY. [DSA-AC] ~~See Chapter 11A, Section 1107A.9-I, and Chapter 11B, Section 1102B.~~ The symbol adopted by Rehabilitation International's 11th World Congress for the purpose of indicating that buildings and facilities are accessible to persons with disabilities.

KEY STATION. [DSA-AC] Certain rapid and light rail stations, and commuter rail stations, as defined under criteria established by the Department of Transportation in 49 CFR 37.47 and 49 CFR 37.51, respectively.

KICK PLATE. [DSA-AC] ~~See Chapter 11A, Section 1107A.11-K, and Chapter 11B, Section 1102B.~~ An abrasion-resistant plate affixed to the bottom portion of a door to prevent a trap condition and protect its surface.

KITCHEN OR KITCHENETTE. [DSA-AC] A room, space or area with equipment for the preparation and cooking of food.

LAVATORY. [DSA-AC] A fixed bowl or basin with running water and drainpipe, as in a toilet or bathing facility, for washing or bathing purposes. (As differentiated from the definition of "Sink".)

~~*LEVEL ACCESSIBLE AREA. [DSA-AC] See Chapter 11C, Section 1101C.1.*~~

~~*LEVEL AREA. [DSA-AC] See Chapter 11A, Section 1107A.12-L, and Chapter 11B, Section 1102B.*~~

~~*LIFT, PLATFORM (WHEELCHAIR). [DSA-AC] See "Platform (Wheelchair) Lift". Chapter 11A, Section 1107A.16-P, and Chapter 11B, Section 1102B.*~~

MAIL BOXES. [DSA-AC] Receptacles for the receipt of documents, packages, or other deliverable matter. Mail boxes include, but are not limited to, post office boxes and receptacles provided by commercial mail-

receiving agencies, apartment facilities, or schools.

MARKED CROSSING. [DSA-AC] ~~See Chapter 11A, Section 1107A.13-M, and Chapter 11B, Section 1102B.~~ A crosswalk or other identified path intended for pedestrian use in crossing a vehicular way.

MAY. [DSA-AC] ~~See Chapter 11B, Section 1102B.~~ May denotes an option or alternative.

MEZZANINE. [DSA-AC] An intermediate level or levels between the floor and ceiling of any story with an aggregate floor area of not more than one-third of the area of the room or space in which the level or levels are located. Mezzanines have sufficient elevation that space for human occupancy can be provided on the floor below.

~~*MULTIPLE-ACCOMMODATION TOILET FACILITY [DSA-AC] is a room that has more than one sanitary fixture, is intended for the use of more than one person at a time and which usually is provided with privacy compartments or screens shielding some fixtures from view. A bathroom serving a hotel guest room and a privacy toilet in small offices, stores and similar locations are not included in this category.*~~

~~*MULTISTORY DWELLING UNITS. [DSA-AC] See Chapter 11A, Section 1107A.13-M.*~~

~~*NEWLY CONSTRUCTED. [DSA-AC] See Chapter 11A, Section 1107A.14-N.*~~

NFPA [DSA-AC] The National Fire Protection Association.

NOSING ~~*(or NOSE)*~~. The leading edge of treads of stairs and of landings at the top of stairway flights. ~~*[DSA-AC] See Chapter 11A, Section 1107A.14-N, and Chapter 11B, Section 1102B.*~~

OCCUPANT LOAD. The number of persons for which the means of egress of a building or portion thereof is designed.

OCCUPIABLE SPACE. A room or enclosed space designed for human occupancy in which individuals congregate for amusement, educational or similar purposes or in which occupants are engaged at labor, and which is equipped with means of egress and light and ventilation facilities meeting the requirements of this code.

OPEN RISER. [DSA-AC] ~~See Chapter 11A, Section 1107A.15-O, and Chapter 11B, Section 1102B.~~ The space between two adjacent stair treads not closed by a riser.

OPERABLE PART. [DSA-AC] ~~See Chapter 11B, Section 1102B.~~ A component of an element used to insert or withdraw objects, or to activate, deactivate, or adjust the element.

~~*PASSAGE DOOR. [DSA-AC] See Chapter 11A, Section 1107A.16-P, and Chapter 11B, Section 1102B.*~~

PASSENGER ELEVATOR. [DSA-AC] See "Elevator, passenger" ~~in Chapter 11B, Section 1102B~~.

PATH OF TRAVEL. [DSA-AC] ~~See Chapter 11B, Section 1102B.~~ An identifiable accessible route within an existing site, building or facility by means of which a particular area may be approached, entered and exited, and which connects a particular area with an exterior approach (including sidewalks, streets, and parking areas), an entrance to the facility, and other parts of the facility. When alterations, structural repairs or additions are made to existing buildings or facilities, the term "path of travel" also includes the toilet and bathing facilities, telephones, drinking fountains and signs serving the area of work.

PEDESTRIAN. [DSA-AC] ~~See Chapter 11A, Section 1107A.16-P, and Chapter 11B, Section 1102B.~~ An individual who moves in walking areas with or without the use of walking assistive devices such as crutches, leg braces, wheelchairs, white cane, service animal, etc.

~~*PEDESTRIAN GRADE SEPARATION. [DSA-AC] See Chapter 11B, Section 1102B. A structure erected over or under an obstacle such as a freeway, roadway, street, railroad, stream, etc., and intended primarily for pedestrian use.*~~

~~*PEDESTRIAN RAMP. [DSA-AC] See Chapter 11A, Section 1107A.16-P, and Chapter 11B, Section 1102B.*~~

PEDESTRIAN WAY. [DSA-AC] ~~*See Chapter 11A, Section 1107A.16-P, and Chapter 11B, Section 1102B.*~~ *A route by which a pedestrian may pass.*

PERMANENT [DSA-AC] Facilities which, are intended to be used for periods longer than those designated in this code under the definition of "Temporary."

PERMIT. An official document or certificate issued by the authority having jurisdiction which authorizes performance of a specified activity.

~~*PERSONS WITH DISABILITIES. [DSA-AC] See Chapter 11A, Section 1107A.16-P.*~~

PICTOGRAM. [DSA-AC] A pictorial symbol that represents activities, facilities, or concepts.

PLACE OF PUBLIC ACCOMMODATION. [DSA-AC] A facility operated by a private entity whose operations affect commerce and fall within at least one of the following categories –

(1) Place of lodging, except for an establishment located within a facility that contains not more than five rooms for rent or hire and that actually is occupied by the proprietor of the establishment as the residence of the proprietor. For purposes of this code, a facility is a "place of lodging" if it is

(i) An inn, hotel, or motel; or

(ii) A facility that –

(A) Provides guest rooms for sleeping for stays that primarily are short-term in nature (generally 30 days or less) where the occupant does not have the right to return to a specific room or unit after the conclusion of his or her stay; and

(B) Provides guest rooms under conditions and with amenities similar to a hotel, motel, or inn, including the following –

(1) On- or off-site management and reservations service;

(2) Rooms available on a walk-up or call-in basis;

(3) Availability of housekeeping or linen service; and

(4) Acceptance of reservations for a guest room type without guaranteeing a particular unit or room until check-in, and without a prior lease or security deposit.

(2) A restaurant, bar, or other establishment serving food or drink;

(3) A motion picture house, theater, concert hall, stadium, or other place of exhibition or entertainment;

(4) An auditorium, convention center, lecture hall, or other place of public gathering;

(5) A bakery, grocery store, clothing store, hardware store, shopping center, or other sales or rental establishment;

(6) A Laundromat, dry-cleaner, bank, barber shop, beauty shop, travel service, shoe repair service, funeral parlor, gas station, office of an accountant or lawyer, pharmacy, insurance office, professional office of a health care provider, hospital, or other service establishment;

(7) A terminal, depot, or other station used for specified public transportation;

(8) A museum, library, gallery, or other place of public display or collection;

(9) A park, zoo, amusement park, or other place of recreation;

(10) A nursery, elementary, secondary, undergraduate, or postgraduate private school, or other place of education;

(11) A day care center, senior citizen center, homeless shelter, food bank, adoption agency, or other social service center establishment; and

(12) A gymnasium, health spa, bowling alley, golf course, or other place of exercise or recreation.

(13) A religious facility.

(14) An office building.

(15) A public curb or sidewalk.

PLATFORM. A raised area within a building used for worship, the presentation of music, plays or other entertainment; the head table for special guests; the raised area for lecturers and speakers; boxing and wrestling rings; theater-in-the-round stages; and similar purposes wherein there are no overhead hanging curtains, drops, scenery or stage effects other than lighting and sound. A temporary platform is one installed for not more than 30 days.

PLATFORM (WHEELCHAIR) LIFT. [DSA-AC] ~~See Chapter 11A, Section 1107A.16-P and Chapter 11B, Section 1102B.~~ A hoisting and lowering mechanism equipped with a car or platform or support that serves two landings of a building or structure and is designed to carry a passenger or passengers and (or) luggage or other material a vertical distance as may be allowed.

PLAY AREA. [DSA-AC] A portion of a site containing play components designed and constructed for children.

PLAY COMPONENT. [DSA-AC] An element intended to generate specific opportunities for play, socialization, or learning. Play components are manufactured or natural; and are stand-alone or part of a composite play structure.

POINT-OF-SALE DEVICE. [DSA-AC] A device used for the purchase of a good or service where a personal identification number (PIN), zip code or signature is required.

POWDER ROOM. [DSA-AC] ~~See Chapter 11A, Section 1107A.16-P.~~ A room containing a water closet (toilet) and a lavatory, and which is not defined as a bathroom.

POWER-ASSISTED DOOR [DSA-AC] A door used for human passage with a mechanism that helps to open the door, or relieves the opening resistance of a door, upon the activation of a switch or a continued force applied to the door itself.

PRIVATE BUILDING OR FACILITY. [DSA-AC] A place of public accommodation or a commercial building or facility subject to Chapter 1, Section 1.9.1.2.

PROFESSIONAL OFFICE OF A HEALTH CARE PROVIDER. [DSA-AC] ~~See Chapter 11B, Section 1102B.~~ A location where a person or entity, regulated by the State to provide professional services related to the physical or mental health of an individual, makes such services available to the public. The facility housing the professional office of a health care provider only includes floor levels housing at least one health care provider, or any floor level designed or intended for use by at least one health care provider.

~~*PUBLIC ACCOMMODATION [DSA-AC] includes, but is not limited to, any public use building or facility that may be classified into one or more of the following categories:*~~

~~*1. Places of public lodging.*~~

~~*2. Establishments serving food or drink open to public use.*~~

~~*3. Places of exhibition or entertainment open to public use.*~~

~~*4. Places of public gathering.*~~

~~*5. Sales or rental establishments open to public use.*~~

~~*6. Service establishments open to public use.*~~

~~*7. Stations used for public transportation.*~~

~~*8. Places of public display or collection.*~~

~~*9. Places of public recreation.*~~

~~*10. Places of public education.*~~

~~*11. Social service center establishments open to public use.*~~

~~*12. Places of exercise or recreation open to public use.*~~

~~*Examples of public accommodations for purposes of this code shall include, but not be limited to, the following private entities:*~~

~~*1. An inn, hotel, motel or other place of public lodging, except for a lodging house located within a building that contains not more than five rooms for rent or hire and that is actually occupied by the proprietor of such establishment as the residence of such proprietor.*~~

~~*2. A restaurant, bar or other establishment serving food or drink.*~~

~~*3. A motion picture house, theater, concert hall, stadium or other place of exhibition or entertainment.*~~

~~*4. An auditorium, convention center, lecture hall or other place of public gathering.*~~

~~*5. A bakery, grocery store, clothing store, hardware store, shopping center, or other sales or rental establishment.*~~

~~*6. A Laundromat, dry cleaner, bank, barber shop, beauty shop, travel service, shoe repair service, funeral parlor, gas station, office of an accountant or lawyer, pharmacy, insurance office, professional office of a health care provider, hospital or other service establishment.*~~

~~*7. A terminal, depot or other station used for specified public transportation.*~~

~~*8. A museum, library, gallery or other place of public display or collection.*~~

~~*9. A park, zoo, amusement park or other place of recreation.*~~

~~*10. A nursery, elementary, secondary, undergraduate or postgraduate private school, or other place of education.*~~

~~*11. A day care center, senior citizen center, homeless shelter, food bank, adoption agency or other social service center establishment.*~~

~~*12. A gymnasium, health spa, bowling alley, golf course or other place of exercise.*~~

~~*13. A church.*~~

~~*14. An office building.*~~

~~*15. A public curb or sidewalk.*~~

PUBLIC BUILDING OR FACILITY. [DSA-AC] A building or facility or portion of a building or facility designed, constructed, or altered by, on behalf of, or for the use of a public entity subject to Chapter 1, Section 1.9.1.1.

PUBLIC ENTITY. [DSA-AC] Any State or local government; any department, agency, special-purpose district, or other instrumentality of a State or local government.

PUBLIC ENTRANCE. [DSA-AC] An entrance that is not a service entrance or a restricted entrance.

PUBLIC HOUSING. [DSA-AC] Housing facilities owned and/or operated by, for or on behalf of a public entity including but not limited to the following:

1. *Publically owned and/or operated one- or two- family dwelling units or congregate residences;*
2. *Publically owned and/or operated buildings or complexes with three or more residential dwellings units;*
3. *Publically owned and/or operated housing provided by entities subject to regulations issued by the United State Department of Housing and Urban Development under Section 504 of the Rehabilitation Act of 1973 as amended;*
4. *Publically owned and/or operated homeless shelters, group homes and similar social service establishments;*
5. *Publically owned and/or operated transient lodging, such as hotels, motels, hostels and other facilities providing accommodations of a short term nature of not more than 30 days duration;*
6. *Housing at a place of education owned or operated by a public entity, such as housing on or serving a public school, public college or public university campus;*
7. *Privately owned housing made available for public use as housing.*

PUBLIC USE. [DSA-AC] Interior or exterior rooms, spaces, or elements that are made available to the public. Public use may be provided at a building or facility that is privately or publicly owned. Private interior or exterior rooms, spaces, or elements associated with a residential dwelling unit provided by a public housing program or in a public housing facility are not public use areas and shall not be required to be made available to the public. In the context of public housing, public use is the provision of housing programs by, for or on behalf of a public entity.

PUBLIC-USE AREAS. …
[DSA-AC] ~~*See Chapter 11A, Section 1107A.16-P, and Chapter 11B, Section 1102B.*~~ *Interior or exterior rooms or spaces of a building that are made available to the general public and does not include common use areas. Public use areas may be provided at a building that is privately or publicly owned.*

PUBLIC WAY. A street, alley or other parcel of land open to the outside air leading to a street, that has been deeded, dedicated or otherwise permanently appropriated to the public for public use and which has a clear width and height of not less than 10 feet (3048 mm).

~~*QUALIFIED HISTORICAL BUILDING (or PROPERTY). [DSA-AC] See C.C.R. Title 24, Part 8.*~~

QUALIFIED HISTORIC BUILDING OR FACILITY. [DSA-AC] A building or facility that is listed in or eligible for listing in the National Register of Historic Places, or designated as historic under an appropriate State or local law. See C.C.R. Title 24, Part 8.

RAMP. A walking surface that has a running slope steeper than one unit vertical in 20 units horizontal (5-percent slope).
~~*[DSA-AC] See Chapter 11A, Section 1107A.18-R and Chapter 11B, Section 1102B.*~~

REASONABLE PORTION [DSA-AC] That segment of a building, facility, area, space or condition, which would normally be necessary if the activity therein is to be accessible by persons with disabilities.

RECOMMEND. [DSA-AC] Does not require mandatory acceptance, but identifies a suggested action that shall be considered for the purpose of providing a greater degree of accessibility to persons with disabilities.

REMODELING. [DSA-AC] See "Alteration."

REPAIR. The reconstruction or renewal of any part of an existing building for the purpose of its maintenance.

RESIDENTIAL DWELLING UNIT. [DSA-AC] A unit intended to be used as a residence that is primarily long-term in nature. Residential dwelling units do not include transient lodging, inpatient medical care, licensed long-term care, and detention or correctional facilities.

RESTRICTED ENTRANCE. [DSA-AC] An entrance that is made available for common use on a controlled basis but not public use and that is not a service entrance.

RISER. [DSA-AC] ~~See Chapter 11A, Section 1107A.18-R, and Chapter 11B, Section 1102B.~~ The upright part between two adjacent stairs treads.

RUNNING SLOPE. [DSA-AC] ~~See Chapter 11B, Section 1102B.~~ The slope that is parallel to the direction of travel. (As differentiated from the definition of "Cross Slope".)

~~*SANITARY FACILITY. [DSA-AC] Any single water closet, urinal, lavatory, bathtub or shower, or a combination thereof, together with the room or space in which they are housed.*~~

SELF-SERVICE STORAGE. [DSA-AC] Building or facility designed and used for the purpose of renting or leasing individual storage spaces to customers for the purpose of storing and removing personal property on a self-service basis.

SERVICE ENTRANCE. An entrance intended primarily for delivery of goods or services.
~~*[DSA-AC] An entrance intended primarily for the delivery of goods or services.*~~

SHALL. [DSA-AC] ~~See Chapter 11B, Section 1102B.~~ Denotes a mandatory specification or requirement.

SHOPPING CENTER (or SHOPPING MALL). [DSA-AC] ~~See Chapter 11B, Section 1102B.~~ One or more sales or rental establishments or stores. A shopping center may include a series of buildings on a common site, connected by a common pedestrian access route on, above or below the ground floor, that is either under common ownership or common control or developed either as one project or as a series of related projects. For the purposes of this section, "shopping center" or "shopping mall" includes a covered mall building.

SHOULD. [DSA-AC] ~~See Chapter 11B, Section 1102B.~~ Denotes an advisory specification or recommendation.

SIDEWALK. [DSA-AC] A surfaced pedestrian way contiguous to a street used by the public. (As differentiated from the definition of "Walk" ~~in Chapter 11A, Section 1107A.23-W and Chapter 11B, Section 1102B~~.)

SIGNAGE [DSA-AC] Displayed verbal, symbolic, tactile, and/or pictorial information.

~~*SINGLE-ACCOMMODATION SANITARY FACILITY [DSA-AC] A room that has not more than one of each type of sanitary fixture, is intended for use by only one person at a time, has no partition around the toilet, and has a door that can be locked on the inside by the room occupant.*~~

SINK. [DSA-AC] A fixed bowl or basin with running water and drainpipe, as in a kitchen or laundry, for washing dishes, clothing, etc. (As differentiated from the definition of "Lavatory".)

SITE. A parcel of land bounded by a lot line or a designated portion of a public right-of-way. ~~*[DSA-AC] A parcel of land bounded by a property line or a designated portion of a public right-of-way.*~~

~~*SITE DEVELOPMENT. [DSA-AC] "On-site" and "off-site" work, including, but not limited to, walks, sidewalks, ramps, curbs, curb ramps, parking facilities, stairs, planting areas, pools, promenades, exterior gathering or assembly areas and raised or depressed paved areas.*~~

SLEEPING ACCOMMODATIONS. [DSA-AC] ~~*See Chapter 11A, Section 1107A.19-S, and Chapter 11B, Section 1102B.*~~ *Rooms intended and designed for sleeping.*

~~*SLOPE. [DSA-AC] See Chapter 11A, Section 1107A.19-S.*~~

SOFT CONTAINED PLAY STRUCTURE. [DSA-AC] A play structure made up of one or more play components where the user enters a fully enclosed play environment that utilizes pliable materials, such as plastic, netting, or fabric.

SPACE. [DSA-AC] ~~*A definable area, e.g., a room, toilet room, hall, assembly area, entrance, storage room, alcove, courtyard, or lobby.*~~ *A definable area, such as a room, toilet room, hall, assembly area, entrance, storage room, alcove, courtyard, or lobby.*

SPECIFIED PUBLIC TRANSPORTATION. [DSA-AC] ~~*See Chapter 11B, Section 1102B.*~~ *Transportation by bus, rail or any other conveyance (other than by aircraft) that provides the general public with general or special service (including charter service) on a regular and continuing basis.*

STAGE. A space within a building utilized for entertainment or presentations, which includes overhead hanging curtains, drops, scenery or stage effects other than lighting and sound.

STAIR. A change in elevation, consisting of one or more risers.

STAIRWAY. One or more flights of stairs, either exterior or interior, with the necessary landings and platforms connecting them, to form a continuous and uninterrupted passage from one level to another.

STORY. ...
[DSA-AC] ~~*See Chapter 11B, 1102B.*~~ *That portion of a building or facility designed for human occupancy included between the upper surface of a floor and upper surface of the floor or roof next above. A story containing one or more mezzanines has more than one floor level. If the finished floor level directly above a basement or unused under-floor space is more than six feet (1829 mm) above grade for more than 50 percent of the total perimeter or is more than 12 feet (3658 mm) above grade at any point, the basement or unused under-floor space shall be considered as a story.*

~~*STORY, FIRST. [DSA-AC] See Chapter 11B, Section 1102B. The lowest story in a building which qualifies as a story and which provides the basic services or functions for which the building is used. A floor level in a building having only one floor level shall be classified as a first story, if the floor level is not more than 4 feet (1219 mm) below grade, for more than 50 percent of the total perimeter, or more than 8 feet (2438 mm) below grade at any point.*~~

STRUCTURAL FRAME. [DSA-AC] ~~See Chapter 11B, Section 1102B.~~ The columns and the girders, beams, and trusses having direct connections to the columns and all other members that are essential to the stability of the building or facility as a whole.

STRUCTURE. That which is built or constructed.

TACTILE. [DSA-AC] ~~Describes an object that can be perceived using the sense of touch.~~ An object that can be perceived using the sense of touch.

TACTILE SIGN. [DSA-AC] A sign containing raised characters and/or symbols and accompanying Braille.

TECHNICALLY INFEASIBLE. An alteration of a building or a facility, that has little likelihood of being accomplished because the existing structural conditions require the removal or alteration of a load-bearing member that is an essential part of the structural frame, or because other existing physical or site constraints prohibit modification or addition of elements, spaces, or features that are in full and strict compliance with the minimum requirements for new construction and which are necessary to provide accessibility.
~~[DSA-AC] "Technically infeasible" means, with respect to an alteration of a building or a facility, that it has little likelihood of being accomplished because existing structural conditions would require removing or altering a load-bearing member which is an essential part of the structural frame; or because other existing physical or site constraints prohibit modification or addition of elements, spaces, or features which are in full and strict compliance with the minimum requirements for new construction and which are necessary to provide accessibility.~~

TEEING GROUND. [DSA-AC] In golf, the starting place for the hole to be played.

TEMPORARY [DSA-AC] Buildings and facilities intended for use at one location for not more than one year and seats intended for use at one location for not more than 90 days.

TEXT TELEPHONE. [DSA-AC] ~~See Chapter 11B, Section 1102B.~~ Machinery or equipment that employs interactive text-based communications through the transmission of coded signals across the standard telephone network. Text telephones can include, for example, devices known as TTYs (teletypewriters) or computers.

TRANSFER DEVICE. [DSA-AC] Equipment designed to facilitate the transfer of a person from a wheelchair or other mobility aid to and from an amusement ride seat.

TRANSIENT LODGING. [DSA-AC] ~~See Chapter 11B, Section 1102B and Chapter 11A, Section 1107A.20-T.~~ A building or facility containing one or more guest room(s) for sleeping that provides accommodations that are primarily short-term in nature (generally 30 days or less). Transient lodging does not include residential dwelling units intended to be used as a residence, inpatient medical care facilities, licensed long-term care facilities, detention or correctional facilities, or private buildings or facilities that contain no more than five rooms for rent or hire and that are actually occupied by the proprietor as the residence of such proprietor. See also the definition of Place of Public Accommodation.

TRANSIT BOARDING PLATFORM. [DSA-AC] ~~See Chapter 11B, Section 1102B.~~ A horizontal, generally level surface, whether raised above, recessed below or level with a transit rail, from which persons embark/disembark a fixed rail vehicle.

TRANSITION PLATE. [DSA-AC] A sloping pedestrian walking surface located at the end(s) of a gangway.

TREAD. [DSA-AC] ~~See Chapter 11A, Section 1107A.20-T, and Chapter 11B, Section 1102B.~~ The horizontal part of a step.

TTY. [DSA-AC] An abbreviation for teletypewriter. Machinery that employs interactive text-based communication through the transmission of coded signals across the telephone network. TTYs may include, for example, devices known as TDDs (telecommunication display devices or telecommunication

devices for deaf persons) or computers with special modems. TTYs are also called text telephones.

~~TYPE OF MOTOR FUEL. [DSA-AC] See Chapter 11C, Section 1101C.1.~~

UNREASONABLE HARDSHIP [DSA-AC] When the enforcing agency finds that compliance with the building standard would make the specific work of the project affected by the building standard infeasible, based on an overall evaluation of the following factors:

1. *The cost of providing access.*
2. *The cost of all construction contemplated.*
3. *The impact of proposed improvements on financial feasibility of the project.*
4. *The nature of the accessibility which would be gained or lost.*
5. *The nature of the use of the facility under construction and its availability to persons with disabilities.*

The details of any finding of unreasonable hardship shall be recorded and entered in the files of the enforcing agency.

USE ZONE. [DSA-AC] The ground level area beneath and immediately adjacent to a play structure or play equipment that is designated by ASTM F 1487 (incorporated by reference, see "Referenced Standards" in Chapter 1) for unrestricted circulation around the play equipment and where it is predicted that a user would land when falling from or exiting the play equipment.

VALUATION THRESHOLD. [DSA-AC] An annually adjusted, dollar-amount figure used in part to determine the extent of required path of travel upgrades. The baseline valuation threshold of $50,000 is based on the January 1981, "ENR US20 Cities" Average Construction Cost Index (CCI) of 3372.02 as published in Engineering News Record, McGraw Hill Publishing Company. The current valuation threshold is determined by multiplying the baseline valuation threshold by a ratio of the current year's January CCI to the baseline January 1981 CCI.

~~VEHICULAR OR PEDESTRIAN ARRIVAL POINTS. [DSA-AC] See Chapter 11A, Section 1107A.22-V.~~

VEHICULAR WAY. [DSA-AC] ~~See Chapter 11B, Section 1102B.~~ A route provided for vehicular traffic, such as in a street, driveway, or parking facility.

WALK. [DSA-AC] ~~See Chapter 11A, Section 1107A.23-W, and Chapter 11B, Section 1102B.~~ An exterior prepared surface for pedestrian use, including pedestrian areas such as plazas and courts. (As differentiated from the definition of "Sidewalk".)

WET BAR. [DSA-AC] An area or space with a counter equipped with a sink and running water but without cooking facilities.

WHEELCHAIR. [DSA-AC] A chair mounted on wheels to be propelled by its occupant manually or with the aid of electric power, of a size and configuration conforming to the recognized standard models of the trade.

~~WHEELCHAIR OCCUPANT (or WHEELCHAIR USER) [DSA-AC] is an individual who, due to a physical impairment or disability, utilizes a wheelchair for mobility.~~

WHEELCHAIR SPACE. [DSA-AC] Space for a single wheelchair and its occupant.

WORKSTATION. ...
[DSA-AC] ~~See Chapter 11B, Section 1102B.~~ An area defined by equipment and/or work surfaces intended for use by employees only, and generally for one or a small number of employees at a time. Examples

include ticket booths; the employee side of grocery store check stands; the bartender area behind a bar; the employee side of snack bars, sales counters and public counters; guardhouses; toll booths; kiosk vending stands; lifeguard stations; maintenance equipment closets; counter and equipment areas in restaurant kitchens; file rooms; storage areas; etc.

WORK AREA EQUIPMENT. [DSA-AC] Any machine, instrument, engine, motor, pump, conveyor, or other apparatus used to perform work. As used in this document, this term shall apply only to equipment that is permanently installed or built-in in employee work areas. Work area equipment does not include passenger elevators and other accessible means of vertical transportation.

Notation
Authority: Government Code Section 4450. Reference(s): Government Code Section(s) 4450 through 4461, and 12955.1(c) and Health and Safety Code Section(s) 18949.1, 19952 through 19959.

TOPIC 3.0

CHAPTER 3 – MATRIX ADOPTION TABLE

Adopting Agency		DSA-AC
Adopt entire Chapter		
Adopt entire Chapter as amended (amended Sections listed below)		
Adopt only those Sections that are listed below		X
Chapter / Section	Codes	
~~302.1~~	~~CA~~	~~X~~

TOPIC 3.1

~~SECTION 302~~
~~CLASSIFICATION~~

~~302.1 General. Structures or portions of structures shall be classified with respect to occupancy in one or more of the groups listed in this section. A room or space that is intended to be occupied at different times for different purposes shall comply with all of the requirements that are applicable to each of the purposes for which the room or space will be occupied. Structures with multiple occupancies or uses shall comply with Section 508. Where a structure is proposed for a purpose that is not specifically provided for in this code, such structure shall be classified in the group that the occupancy most nearly resembles, according to the fire safety and relative hazard involved.~~

~~1. Assembly (see Section 303): Groups A-1, A-2, A-3, A-4 and A-5~~
~~2. Business (see Section 304): Group B~~
~~3. Educational (see Section 305): Group E~~
~~4. Factory and Industrial (see Section 306): Groups F-1 and F-2~~
~~5. High Hazard (see Section 307): Groups H-1, H-2, H-3, H-4 and H-5~~
~~6. Institutional (see Section 308): Groups I-1, I-2, I-3 and I-4~~
~~*7. Laboratory (see Section 202): Group B, unless classified as Group L (see Section 443) or Group H (see Section 307.*~~
~~7. 8. Mercantile (see Section 309): Group M~~
~~*9. [SFM] Organized Camps (see Section 440): Group C10.*~~
~~*10. [SFM] Research Laboratories (see Section 443): Group L.*~~
~~8. 11. Residential (see Section 310): Groups R-1, R-2, *R-2.1*, R-3, *R-3.1* and R-4~~
~~9. 12. Storage (see Section 311): Groups S-1 and S-2~~
~~10. 13. Utility and Miscellaneous (see Section 312): Group U~~

~~*[SFM] Existing buildings housing existing protective social care homes or facilities established prior to 1972 (see Section 3413).*~~

Notation
Authority: Government Code Section 4450. Reference(s): Government Code Section(s) 4450 through 4461, and 12955.1(c) and Health and Safety Code Section(s) 18949.1, 19952 through 19959.

CHAPTER 4
SPECIAL DETAILED REQUIREMENTS BASED ON USE AND OCCUPANCY

TOPIC 4.0

CHAPTER 4 — MATRIX ADOPTION TABLE

Adopting Agency		DSA-AC
Adopt entire Chapter		
Adopt entire Chapter as amended (amended Sections listed below)		
Adopt only those Sections that are listed below		X
Chapter / Section	Codes	
~~406.2.2~~ 406.4.1	CA	X
~~412.3.6~~ 412.3.5	CA	X
419.7		

TOPIC 4.1

SECTION 406
MOTOR-VEHICLE-RELATED OCCUPANCIES

406.4 Public parking garages.

~~406.2.2~~ 406.4.1 Clear height. The clear height of each floor level in vehicle and pedestrian traffic areas shall be not less than 7 feet (2134 mm). ~~Vehicle and pedestrian areas accommodating van-accessible parking shall comply with Section 1106.5.~~ *[DSA-AC] The clear height of vehicle and pedestrian areas required to be accessible shall comply with Chapter 11A or 11B, as applicable.*

TOPIC 4.2

SECTION 412
AIRCRAFT-RELATED OCCUPANCIES

412.3 Airport traffic control towers. …

~~412.3.6~~ 412.3.5 Accessibility. ~~Airport traffic control towers need not be accessible as specified in the provisions of Chapter 11.~~ *[DSA-AC] In air traffic control towers, an accessible route shall not be required to serve the cab and the equipment areas on the floor immediately below the cab.*

TOPIC 4.3

SECTION 419
LIVE/WORK UNITS

419.7 Accessibility. Accessibility shall be designed in accordance with ~~Chapter 11 for the function served~~ *Chapters 11A and/or 11B, when applicable.*

Notation
Authority: Government Code Section 4450. Reference(s): Government Code Section(s) 4450 through 4461, and 12955.1(c) and Health and Safety Code Section(s) 18949.1, 19952 through 19959.

TOPIC 9.0

CHAPTER 9 – MATRIX ADOPTION TABLE

Adopting Agency		DSA-AC
Adopt entire Chapter		
Adopt entire Chapter as amended (amended Sections listed below)		
Adopt only those Sections that are listed below		X
Chapter / Section	Codes	
907.4.2.2	CA	X
~~907.5.2.1 w/ Exc 1 & 2~~		~~X~~
~~907.5.2.1.1~~		~~X~~
~~907.5.2.1.2~~		~~X~~
~~907.5.2.1.3 w/ Exc~~		~~X~~
907.5.2.3 w/ Exc 1, 2 & 3	CA	X
907.5.2.3.1	CA	X
907.5.2.3.2	IBC	X
907.5.2.3.3	IBC	X
Table 907.5.2.3.3	CA	X
907.5.2.3.4	CA	X
907.5.2.3.5	CA	X

TOPIC 9.1

SECTION 907
FIRE ALARM AND DETECTION SYSTEMS

907.4.2 Manual fire alarm boxes.

907.4.2.2 Height. The height of the manual fire alarm boxes shall be a minimum of 42 inches (1067 mm) and a maximum of 48 inches (~~1372~~ *1219* mm) measured vertically, from the floor level to the *highest point of the* activating handle or lever of the box. *Manual fire alarm boxes shall also comply with Section ~~1117B.6, Item 4~~ 11B-309.4.*

Exception: [DSA-AC] In existing buildings there is no requirement to retroactively relocate existing manual fire alarm boxes to a minimum of 42 inches (1067 mm) and a maximum of 48 inches (1219 mm) from the floor level to the activating handle or lever of the box.

907.5.2 Alarm notification appliances.

907.5.2.3 Visible alarms. …

907.5.2.3.1 Public and common *use* areas. Visible alarm notification appliances shall be provided in public *use* areas and common *use* areas*, including but not limited to:*

1. *Sanitary facilities including restrooms, bathrooms and shower rooms*
2. *Corridors*
3. *Music practice rooms*

4. *Band rooms*

5. *Gymnasiums*

6. *Multipurpose rooms*

7. *Occupational shops*

8. *Occupied rooms where ambient noise impairs hearing of the fire alarm*

9. *Lobbies*

10. *Meeting rooms*

11. *Classrooms*

907.5.2.3.3 Groups ~~I-1 and~~ R-1 *and R-2.1*. …

TABLE 907.5.2.3.3
VISIBLE ALARMS

NUMBER OF SLEEP UNITS	SLEEPING ACCOMMODATIONS WITH VISIBLE ALARMS
6 to 25	2
26 to 50	4
51 to 75	7
76 to 100	9
101 to 150	12
151 to 200	14
201 to 300	17
301 to 400	20
401 to 500	22
501 to 1,000	5% of total
1,001 and over	50 plus 3 for each 100 over 1,000

[SFM] [DSA-AC] Also see Chapter 11B, Section ~~1111B.4.5, Tables 11B-3 and 11B-4~~ 11B-224.4 and Table 11B-224.4.

907.5.2.3.4 Group R-2. In Group R-2 occupancies required by Section 907 to have a fire alarm system, all dwelling units and sleeping units shall be provided with the capability to support visible alarm notification appliances in accordance with *NFPA 72.* ~~Chapter 10 of ICC A117.1.~~ Such capability shall be permitted to include the potential for future interconnection of the building fire alarm system with the unit smoke alarms, replacement of audible appliances with combination audible/visible appliances, or future extension of the existing wiring from the unit smoke alarm locations to required locations for visible appliances.

Notation
Authority: Government Code Section 4450. Reference(s): Government Code Section(s) 4450 through 4461, and 12955.1(c) and Health and Safety Code Section(s) 18949.1, 19952 through 19959.

TOPIC 10.0

CHAPTER 10 – MATRIX ADOPTION TABLE

Adopting Agency		DSA-AC
Adopt entire Chapter		
Adopt entire Chapter as amended (amended Sections listed below)		
Adopt only those Sections that are listed below		X
Chapter / Section	Codes	
1003.1, not SFM exception	CA	X
1007.1	CA	X
1007.2	CA	X
1007.2.1	IBC	X
1007.3	CA	X
1007.4	IBC	X
1007.5	CA	X
1007.5.1	IBC	X
1007.6	CA	X
1007.6.1	CA	X
1007.6.2	CA	X
1007.6.3	IBC	X
1007.7	CA	X
1007.7.1	IBC	X
1007.7.2	IBC	X
1007.8	IBC	X
~~1007.8.1~~		~~X~~
1007.8.1.1	CA	X
1007.8.2	CA	X
1007.9	CA	X
1007.10	CA	X
1007.11	CA	X
1007.12	CA	X
1008 (1st paragraph below title only)	CA	X
1008.1.9.7 (Item 5.1 only)	CA	X
1009 (1ST paragraph below title only)	CA	X
~~1009.4.2 Exc 6~~ 1009.7.2 Exc. 6 only	CA	X
~~1009.12~~ 1009.15 (2nd paragraph only)	CA	X
1010 (1st paragraph below title only)	CA	X
~~1011.3~~ 1011.4	CA	X
1012 1st paragraph below title only	CA	X
~~1013.1~~ 1013.2	IBC	X
~~1013.2~~ 1013.3	CA	X
~~1013.3~~ ~~1013.4~~		~~X~~

1017 (1st paragraph below title only)	CA	X
~~1017.2~~ 1017.3 Exc only	CA	X
~~1022.8~~ 1022.9 2nd paragraph only	CA	X

TOPIC 10.1

SECTION 1003
GENERAL MEANS OF EGRESS

1003.1 Applicability. The general requirements specified in Sections 1003 through 1013 shall apply to all three elements of the means of egress system, in addition to those specific requirements for the exit access, the exit and the exit discharge detailed elsewhere in this chapter.

[DSA-AC] In addition to the requirement of this chapter, means of egress, which provide access to, or egress from, buildings or facilities where accessibility is required for applications listed in Section 1.8.2.1.2 regulated by the Department of Housing and Community Development, or Section 1.9.1 regulated by the Division of the State Architect-Access Compliance, shall also comply with Chapter 11A or Chapter 11B, as applicable.

1003.5 Elevation change. …

Exceptions:

1. A single step with a maximum riser height of 7 inches (178 mm) is permitted for buildings with occupancies in Groups F, H, R-2, R-3, S and U at exterior doors not required to be *accessible* by Chapter ~~11~~ *11A or 11B*.

2. A *stair* with a single riser or with two risers and a tread is permitted at locations not required to be *accessible* by Chapter ~~11~~ *11A or 11B*, provided that the risers and treads comply with Section 1009.7, the minimum depth of the tread is 13 inches (330 mm) and at least one *handrail* complying with Section 1012 is provided within 30 inches (762 mm) of the centerline of the normal path of egress travel on the *stair*.

3. A step is permitted in *aisles* serving seating that has a difference in elevation less than 12 inches (305 mm) at locations not required to be *accessible* by Chapter ~~11~~ *11A or 11B*, provided that the risers and treads comply with Section 1028.11 and the *aisle* is provided with a *handrail* complying with Section 1028.13. Throughout a story in a Group I-2 occupancy, any change in elevation in portions of the *means of egress* that serve nonambulatory persons shall be by means of a *ramp* or sloped walkway.

TOPIC 10.2

SECTION 1007
ACCESSIBLE MEANS OF EGRESS

1007.1 Accessible means of egress required. Accessible means of egress shall comply with this section. Accessible spaces shall be provided with not less than one accessible means of egress. Where more than one means of egress are required by Section 1015.1 or 1021.1 from any accessible space, each accessible portion of the space shall be served by ~~not less than two~~ accessible means of egress *in at least the same number as required by Section 1015.1 or 1021.1. In addition to the access to, or egress from, buildings for persons with disabilities, shall also comply with the requirements of Chapter 11A or 11B as applicable.*

Exceptions:

1. Accessible means of egress are not required in alterations to existing buildings.

2. One accessible means of egress is required from an accessible mezzanine level in accordance with Section 1007.3, 1007.4 or 1007.5 *and Chapter 11A or 11B, as applicable*.

3. In assembly areas with sloped or stepped aisles, one accessible means of egress is permitted where the common path of travel is accessible and meets the requirements in Section 1028.8*, and Chapter 11A or 11B, as applicable*.

1007.2 Continuity and components. Each required accessible means of egress shall be continuous to a public way and shall consist of one or more of the following components:

1. Accessible routes complying with ~~Section 1104~~ *Chapter 11A, Section 1110A.1 and 1120A, or Chapter 11B,* ~~*Section 1114B.1.2*~~ *Sections 11B-206 and 11B-402, as applicable*.

2. Interior exit stairways complying with Sections 1007.3 and 1022*, Chapter 11A, Section 1123A, or Chapter 11B,* ~~*Section 1133B.4*~~ *Sections 11B-210 and 11B-504, as applicable*.

3. Interior exit access stairways complying with Sections 1007.3 and 1009.3*, Chapter 11A, Section 1123A, or Chapter 11B,* ~~*Section 1133B.4*~~ *Sections 11B-210 and 11B-504, as applicable*.

4. Exterior exit stairways complying with Sections 1007.3*,* ~~and~~ 1026*, and Chapter 11A, Section 1115A, or Chapter 11B,* ~~*Section 1133B.4*~~ *Sections 11B-210 and 11B-504, as applicable*. ~~and serving levels other than the level of exit discharge.~~

5. Elevators complying with Section 1007.4*, and Chapter 11A, Section 1124A, or Chapter 11B,* ~~*Section 1116B.1*~~ *Sections 11B-206.6 and 11B-407, as applicable*.

6. Platform lifts complying with Section 1007.5 *and Chapter 11A, Section 1124A, or Chapter 11B,* ~~*Section 1116B.2*~~ *Sections 11B-206.7, 11B-207.2 and 11B-410 as applicable*.

7. Horizontal exits complying with Section 1025.

8. Ramps complying with Section 1010*, and Chapter 11A, Sections 1114A and 1122A, or Chapter 11B, Section* ~~*1133B.5*~~ *11B-405, as applicable*.

9. Areas of refuge complying with Section 1007.6.

10. Exterior area for assisted rescue complying with Section 1007.7.

1007.3 Stairways. In order to be considered part of an accessible means of egress*,* a stairway between stories shall have a clear width of 48 inches (1219 mm) minimum between handrails and shall either incorporate an area of refuge within an enlarged floor-level landing or shall be accessed from either an area of refuge complying with Section 1007.6 or a horizontal exit. Exit access stairways that connect levels in the same story are not permitted as part an accessible means of egress. *[DSA-AC] In addition, exit stairways shall comply with Chapter 11A, Section 1115A and 1123A, or Chapter 11B,* ~~*Section 1133B.4*~~ *Sections 11B-210 and 11B-504, as applicable.*

Exceptions:

1. The clear width of 48 inches (1219 mm) between handrails is not required in buildings equipped throughout with an automatic sprinkler system installed in accordance with Section 903.3.1.1 or 903.3.1.2.

2. Areas of refuge are not required at stairways in buildings equipped throughout by an automatic sprinkler system installed in accordance with Section 903.3.1.1 or 903.3.1.2.

3. The clear width of 48 inches (1219 mm) between handrails is not required for stairways accessed from a horizontal exit.

4. Areas of refuge are not required at stairways serving open parking garages.

5. Areas of refuge are not required for smoke protected seating areas complying with Section 1028.6.2.
6. The areas of refuge are not required in Group R-2 occupancies.

1007.5 Platform lifts. Platform (wheelchair) lifts shall not serve as part of an accessible means of egress, except where allowed as part of a required accessible route in ~~Section 1109.7, Items 1 through 9~~. *Chapter 11A, Section 1121A, or Chapter 11B,* ~~*Section 1116B.2 Items 1 through 4*~~ *Sections 11B-206.7.1 through 11B-206.7.10, as applicable*. Standby power shall be provided in accordance with Chapter 27 for platform lifts permitted to serve as part of a means of egress.

[DSA-AC] See Chapter 11B, Section ~~*1116B.2.5*~~ *11B-207.2 for additional accessible means of egress requirements at platform* ~~*(wheelchair)*~~ *lifts.*

1007.5.1 Openness. Platform lifts on an accessible means of egress shall not be installed in a fully enclosed hoistway.

1007.6 Areas of refuge. Every required area of refuge shall be accessible from the space it serves by an accessible means of egress. The maximum travel distance from any accessible space to an area of refuge shall not exceed the travel distance permitted for the occupancy in accordance with Section 1016.1. Every required area of refuge shall have direct access to a stairway complying with Sections 1007.3 or an elevator complying with Section 1007.4. Where an elevator lobby is used as an area of refuge, the shaft and lobby shall comply with Section 1022.10 for smokeproof enclosures except where the elevators are in an area of refuge formed by a horizontal exit or smoke barrier. *[DSA-AC] Areas of refuge shall comply with the requirements of this code and shall adjoin an accessible route* ~~*of travel*~~ *complying with* ~~*Section 1114B.1.2*~~ *Sections 11B-206 and 11B-402.*

1007.6.1 Size. Each area of refuge shall be sized to accommodate ~~one~~ *two* wheelchair space*s that are not less than* ~~of~~ 30 inches by 48 inches (762 mm by 1219 mm)*. The total number of such 30-inch by 48-inch (762 mm) by 1219 mm) spaces per story shall be not less than one for every 200 persons of calculated occupant load served by the area of refuge.* ~~for each 200 occupants or portion thereof, based on the occupant load of the area of refuge and areas served by the area of refuge.~~ Such wheelchair spaces shall not reduce the required means of egress width. Access to any of the required wheelchair spaces in an area of refuge shall not be obstructed by more than one adjoining wheelchair space.

Exception: The enforcing agency may reduce the size of each required area of refuge to accommodate one wheelchair space that is not less than 30 inches by 48 inches (762 mm by 1219 mm) on floors where the occupant load is less than 200.

1007.8 Two-way communication. …

1007.8.1.1 Visible communication method. [DSA-AC] A button complying with ~~*Section 1117B.6*~~ *Sections 11B-205 and 11B-309 in the area of refuge shall activate both a light in the area of refuge indicating that rescue has been requested and a light at the central control point indicating that rescue is being requested. A button at the central control point shall activate both a light at the central control point and a light in the area of refuge indicating that the request has been received.*

1007.9 Signage. Signage indicating special accessibility provisions shall be provided as shown:

1. Each door providing access to an area of refuge from an adjacent floor area shall be identified by a sign ~~*complying with Section 1117B.5.1, Item 2*~~ stating: AREA OF REFUGE.

2. Each door providing access to an exterior area for assisted rescue shall be identified by a sign stating: EXTERIOR AREA FOR ASSISTED RESCUE.

Signage shall comply with *Section ~~1117B.5.1, Items 2 and 3~~ 11B-703.5* ~~the ICC A117.1~~ requirements for visual characters and include the International Symbol of Accessibility *complying with Section 11B-703.7.2.1*. Where exit sign illumination is required by Section 1011.3, the signs shall be illuminated. Additionally, raised character and Braille signage complying with *~~Section 1117B.5.1, Item 1,~~ Sections 11B-703.1, 11B-703.2, 11B-703.3 and 11B-703.5 and the International Symbol of Accessibility complying with Section 11B-703.7.2.1* ~~ICC A117.1~~ shall be located at each door to an area of refuge and exterior area for assisted rescue in accordance with Section 1011.4.

~~*[DSA-AC] Signs shall comply with Chapter 11A or Chapter 11B, Section 1117B.5.1, Items 2 and 3, as applicable.*~~

1007.10 Directional signage. Direction signage *complying with Section 11B-703.5* indicating the location of the other means of egress and which are accessible means of egress shall be provided at the following:

1. At exits serving a required accessible space but not providing an approved accessible means of egress.

2. At elevator landings.

3. Within areas of refuge.

1007.11 Instructions. In areas of refuge and exterior areas for assisted rescue, instructions on the use of the area under emergency conditions shall be posted. The instructions shall include all of the following *and shall comply with Section ~~1117B.5.1, Item 2~~ 11B-703.5*:

1. Persons able to use the exit stairway do so as soon as possible, unless they are assisting others.

2. Information on planned availability of assistance in the use of stairs or supervised operation of elevators and how to summon such assistance.

3. Directions for use of the two-way communications system where provided.

TOPIC 10.3

SECTION 1008
DOORS, GATES AND TURNSTILES

[DSA-AC] In addition to the requirements of this section, means of egress, which provide access to, or egress from, buildings or facilities where accessibility is required for applications listed in Section 1.9.1 regulated by the Division of the State Architect—Access Compliance, shall also comply with Chapter 11A or Chapter 11B, ~~Section 1133B.2~~ Sections 11B-206.5 and 11B-404, as applicable.

1008.1.4 Special doors.

1008.1.4.1 Revolving doors. Revolving doors shall comply with the following:

1. ...
2. ...
3. ...
4. ...
5. Revolving doors shall not be part of an *accessible route* required by Section 1007 and Chapter ~~11~~ *11A or 11B*.

1008.1.7 Thresholds. ...

Exception: In occupancy Group R-2 or R-3, threshold heights for sliding and side-hinged exterior doors shall if all of the following apply:

1. ...

2. The door is not part of an *accessible route* as required by Chapter ~~11~~ *11A or 11B*.
3. ...

1008.1.9 Door operations.

1008.1.9.1 Hardware. Door handles, pulls, latches, locks and other operating devices on doors required to be *accessible* by Chapter ~~11~~ *11A or 11B* shall not require tight grasping, tight pinching or twisting of the wrist to operate.

1008.1.9.7 Delayed egress locks. …

1. ...
2. …
3. …
4. The initiation of an irreversible process which will release the latch in not more than 15 seconds when a force of not more than 15 pounds (67 N) is applied for 1 second to the release device. Initiation of the irreversible process shall activate an audible signal in the vicinity of the door. Once the door lock has been released by the application of force to the releasing device, relocking shall be by manual means only. *The time delay established for each egress-control device shall not be field adjustable. For applications listed in Section 1.9.1 regulated by the Division of the State Architect-Access Compliance, see Chapter 11B, Section ~~1133B.2.5~~ 11B-404.2.9.*

5. A sign shall be provided on the door located above and within 12 inches (305 mm) of the release device reading: ~~PUSH UNTIL ALARM SOUNDS. DOOR CAN BE OPENED IN 15 30] SECONDS.~~ *"KEEP PUSHING. THIS DOOR WILL OPEN IN 15 [30] SECONDS. ALARM WILL SOUND." Sign lettering shall be at least 1 inch (25 mm) in height and shall have a stroke of not less than 1/8 inch (3.2 mm).*

   5.1 A tactile sign shall also be provided in Braille and raised characters, which complies with ~~Section 1117B.5.1.1, Item 1~~ Sections 11B-703.1, 11B-703.2, 11B-703.3 and 11B-703.5.

6. ...
7. ..
8. ...
9. ...

TOPIC 10.4

SECTION 1009
STAIRWAYS

[DSA-AC] In addition to the requirements of this section, means of egress, which provide access to, or egress from, buildings or facilities where accessibility is required for applications listed in Section 1.9.1 regulated by the Division of the State Architect-Access Compliance, shall also comply with Chapter 11A or Chapter 11B, ~~Section 1133B.4~~ Sections 11B-210 and 11B-504, as applicable.

~~1009.4.2~~ 1009.7.2 Riser height and tread depth….

Exceptions:

1. ...
2. ...
3. ...
4. ...
5. ...

6. See Section 3404.1 for the replacement of existing stairways. *[HCD] . . . [DSA-AC] For applications listed in Section 1.9.1 regulated by the Division of the State Architect-Access Compliance, see Chapter 11B, Section ~~1134B~~ 11B-202.*
7. ...
8. …

~~1009.12~~ 1009.15 Handrails. ...

[DSA-AC] For applications listed in Section 1.9.1 regulated by the Division of the State Architect-Access Compliance, see Chapter 11B, ~~Section 1133B.4.1~~ Sections 11B-504.6 and 11B-505.

TOPIC 10.5

SECTION 1010
RAMPS

[DSA-AC] In addition to the requirements of this section, means of egress, which provide access to, or egress from, buildings or facilities where accessibility is required for applications listed in Section 1.9.1 regulated by the Division of the State Architect-Access Compliance, shall also comply with Chapter 11A or Chapter 11B, Section ~~1133B.5~~ 11B-405, as applicable.

1010.1 Scope. …

Exceptions:

1. ...
2. Curb ramps shall comply with *Chapter 11A or 11B, Section ~~1127B.5~~ 11B-406, as applicable.* ~~ICC A117.1.~~
3. ...

TOPIC 10.6

SECTION 1011
EXIT SIGNS

~~1011.3~~ 1011.4 Raised character and Braille exit signs.
~~A sign stating EXIT in raised characters and Braille and complying with ICC A117.1 shall be provided adjacent to each door to an area of refuge, an exterior area for assisted rescue, an exit stairway, an exit ramp, an exit passageway and the exit discharge.~~
~~Tactile exit signs~~. Tactile exit signs shall be required at the following locations:

1. *Each grade-level exterior exit door that is required to comply with Section 1011.1, shall be identified by a tactile exit sign with the word, "EXIT."*

2. *Each exit door that is required to comply with Section 1011.1, and that leads directly to a grade-level exterior exit by means of a stairway or ramp shall be identified by a tactile exit sign with the following words as appropriate:*

   2.1. "EXIT STAIR DOWN"

   2.2. "EXIT RAMP DOWN"

   2.3. "EXIT STAIR UP"

   2.4. "EXIT RAMP UP"

3. *Each exit door that is required to comply with Section 1011.1, and that leads directly to a grade-level exterior exit by means of an exit enclosure or an exit passageway shall be identified by a tactile exit sign with the words, "EXIT ROUTE."*

4. Each exit access door from an interior room or area to a corridor or hallway that is required to comply with Section 1011.1, shall be identified by a tactile exit sign with the words "EXIT ROUTE."

5. Each exit door through a horizontal exit that is required to comply with Section 1011.1, shall be identified by a sign with the words, "TO EXIT."

~~For the purposes of this Section "tactile exit signs"~~ Raised character and Braille exit signs shall comply with ~~Section 1117B.5.1 Item 1~~ Sections 11B-703.1, 11B-703.2, 11B-703.3 and 11B-703.5.

TOPIC 10.7

SECTION 1012
HANDRAILS

[DSA-AC] In addition to the requirements of this section, means of egress, which provide access to, or egress from, buildings or facilities where accessibility is required for applications listed in Section 1.9.1 regulated by the Division of the State Architect-Access Compliance, shall also comply with Chapter 11A or Chapter 11B, Section ~~1133B.5.5~~ 11B-505, as applicable.

TOPIC 10.8

SECTION 1013
GUARDS

~~1013.2~~ 1013.3 Height. Required guards shall not be less than 42 inches (1067 mm) high, measured vertically as follows:

1. From the adjacent walking surfaces;

2. On stairs, from the line connecting the leading edges of the tread nosings; and

3. On ramps, from the ramp surface at the guard.

Exceptions:

~~1. For occupancies in Group R-3 not more than three stories above grade in height and within individual dwelling units in occupancies in Group R-2 not more than three stories above grade in height with separate means of egress, required guards shall not be less than 36 inches (914 mm) in height measured vertically above the adjacent walking surfaces or adjacent fixed seating.~~

~~2.~~ 1. For occupancies in Group R-3, and within individual dwelling units in occupancies in Group R-2, guards on the open sides of stairs shall have a height not less than 34 inches (864 mm) measured vertically from a line connecting the leading edges of the treads.

~~3.~~ 2. For occupancies in Group R-3, and within individual dwelling units in occupancies in Group R-2, where the top of the guard also serves as a handrail on the open sides of stairs, the top of the guard shall not be less than 34 inches (864 mm) and not more than 38 inches (965 mm) measured vertically from a line connecting the leading edges of the treads.

~~4.~~ 3. The guard height in assembly seating areas shall comply with Section 1028.14.

~~5.~~ 4. Along alternating tread devices and ship ladders, guards whose top rail also serves as a handrail, shall have height not less than 30 inches (762 mm) and not more than 34 inches (864 mm), measured vertically from the leading edge of the device tread nosing.

TOPIC 10.9

SECTION 1017
AISLES

[DSA-AC] In addition to the requirements of this section, means of egress, which provide access to, or egress from, buildings or facilities where accessibility is required for applications listed in Section 1.9.1 regulated by the Division of the State Architect-Access Compliance, shall also comply with Chapter 11A or Chapter 11B, Section ~~1133B.6~~ 11B-403, as applicable.

~~1017.2~~
1017.3 Aisles in Groups B and M. In Group B and M occupancies, the minimum clear aisle width shall be determined by Section 1005.1 for the occupant load served, but shall not be less than 36 inches (914 mm).

> Exception: Nonpublic aisles serving less than 50 people and not required to be accessible by ~~Chapter 11~~ *Chapter 11B (see ~~Sections 1103B.1, Exception 2 and 1123B.2, Exception~~ Section 11B-403)* need not exceed 28 inches (711 mm) in width.

TOPIC 10.10

SECTION 1022
INTERIOR EXIT STAIRWAYS AND RAMPS

~~1022.8 Floor identification signs.~~
1022.9 Stairway identification signs. A sign shall be provided at each floor landing in an interior exit stairway and ramp connecting more than three stories designating the floor level, the terminus of the top and bottom of the interior exit stairway and ramp and the identification of the stair or ramp. The signage shall also state the story of, and the direction to, the exit discharge and the availability of roof access from the interior exit stairway and ramp for the fire department. The sign shall be located 5 feet (1524 mm) above the floor landing in a position that is readily visible when the doors are in the open and closed positions. ~~In addition to the stairway identification sign, a floor-level sign in raised characters and Braille complying with ICC A117.1 shall be located at each floor-level landing adjacent to the door leading from the interior exit stairway and ramp into the corridor to identify the floor level.~~

~~Tactile~~ In addition to the stairway identification sign, raised characters and Braille floor identification signs that comply with ~~Section 1117B.5.1, Item 1~~ Sections 11B-703.1, 11B-703.2, 11B-703.3 and 11B-703.5 shall be located at the landing of each floor level, placed adjacent to the door on the latch side, in all enclosed stairways in buildings two or more stories in height to identify the floor level. At the exit discharge level, the sign shall include a raised five pointed star located to the left of the identifying floor level. The outside diameter of the star shall be the same as the height of the raised characters.

Notation
Authority: Government Code Section 4450. Reference(s): Government Code Section(s) 4450 through 4461, and 12955.1(c) and Health and Safety Code Section(s) 18949.1, 19952 through 19959.

TOPIC 11A.0

CHAPTER 11A – MATRIX ADOPTION TABLE

Adopting Agency		DSA-AC
Adopt entire Chapter		
Adopt entire Chapter as amended (amended Sections listed below)		~~X~~
Adopt only those Sections that are listed below		X
Chapter / Section	Codes	
~~1102A.3.1, Exc.~~	~~CA~~	~~‡~~
~~1104A.2, Exc.~~	~~CA~~	~~‡~~
1128A	CA	X
1129A	CA	X
1130A	CA	X
1131A	CA	X
1132A	CA	X
1133A	CA	X
1134A	CA	X
1135A	CA	X
1136A	CA	X
1150A.1	CA	X

The state agency does not adopt sections identified with the following symbol: †

Notation
Authority: Government Code Section 4450. Reference(s): Government Code Section(s) 4450 through 4461, and 12955.1(c) and Health and Safety Code Section(s) 18949.1, 19952 through 19959.

TOPIC 11B.0

CHAPTER 11B – MATRIX ADOPTION TABLE

Adopting Agency		DSA-AC
Adopt entire California Chapter		X
Adopt entire California Chapter as amended (amended Sections listed below)		
Adopt only those Sections that are listed below		
Chapter / Section	Codes	

Notation
Authority: Government Code Section 4450. Reference(s): Government Code Section(s) 4450 through 4461, and 12955.1(c) and Health and Safety Code Section(s) 18949.1, 19952 through 19959.

TOPIC 11B.1

~~Division I – NEW BUILDINGS~~

~~SECTION 1101B~~
~~SCOPE~~

~~See Chapter 1, Section 1.9.1.5~~

~~1101B.1 General.~~

1. *~~Buildings or facilities or portions of buildings shall be accessible to persons with disabilities as required by this chapter.~~*

2. *~~Departures from particular technical and scoping requirements of this chapter by the use of other designs and technologies are permitted where the alternative designs and technologies used will provide equivalent or greater access to and usability of the building or facility.~~*

3. *~~In determining equivalent facilitation, consideration shall be given to means that provide for the maximum independence of persons with disabilities while presenting the least risk of harm, injury or other hazard to such persons or others.~~*

~~1101B.2 Design. The design and construction of accessible building and facility elements shall be in accordance with this chapter.~~

~~1101B.3 Maintenance of accessible features.~~

1. *~~A public accommodation shall maintain in operable working condition those features of facilities and equipment that are required to be accessible to and usable by persons with disabilities.~~*

2. *~~This section does not prohibit isolated or temporary interruptions in service or access due to maintenance or repairs.~~*

~~1101B.4 Dimension conventions. Dimensions that are not stated as "maximum" or "minimum" are absolute.~~

*~~1101B.5 Construction and manufacturing tolerances. All dimensions are subject to conventional industry~~

~~*tolerances except where the requirement is stated as a range with specific minimum and maximum end points.*~~

~~*1101B.6 Commercial facilities located in private residences.*~~

1. ~~*When a commercial facility is located in a private residence, the portion of the residence used exclusively as a residence is not covered by this chapter, except as required by Section 1111B.5, but that portion used both for the commercial facility and for residential purposes is covered by the new construction and alterations requirements of this code.*~~

2. ~~*The portion of the residence covered extends to those elements used to enter the commercial facility, including the homeowner's front sidewalk, if any, the door or entryway, and hallways; and those portions of the residence, interior or exterior, available to or used by employees or visitors of the commercial facility, including sanitary facilities.*~~

~~*1101B.7 Provisions for adults. Unless otherwise indicated, the dimensions and specifications in these regulations are based upon adult dimensions and anthropometrics.*~~

~~*SECTION 1102B*~~
~~*DEFINITIONS*~~

~~*For additional definitions pertinent to the Division of the State Architect-Access Compliance accessibility requirements, see Chapter 2, Section 202.*~~

~~*For the purpose of the chapter, certain terms are defined as follows:*~~

~~*ACCESS AISLE is an accessible pedestrian space adjacent to or between parking spaces that provides clearances in conformance with this chapter.*~~

~~*ACCESSIBILITY is the combination of various elements in a building, facility, site, or area, or portion thereof which allows access, circulation and the full use of the building and facilities by persons with disabilities in conformance with this chapter.*~~

~~*ACCESSIBLE is approachable and usable by persons with disabilities in compliance with this code.*~~

~~*ACCESSIBLE ELEMENT is an element specified by the regulations adopted by the Division of the State Architect-Access Compliance.*~~

~~*ACCESSIBLE MEANS OF EGRESS. See Section 1002.1.*~~

~~*ACCESSIBLE ROUTE OF TRAVEL is a continuous unobstructed path connecting all accessible elements and spaces in an accessible building or facility that can be negotiated by a person with a disability using a wheelchair and that is also safe for and usable by persons with other disabilities, and that is consistent with the definition of "Path of travel" in this section. Interior accessible routes may include corridors, floors, ramps, elevators, lifts and clear floor space at fixtures. Exterior accessible routes may include parking access aisles, curb ramps, crosswalks at vehicular ways, walks, sidewalks, ramps, and lifts. An accessible route does not include stairs, steps, or escalators.*~~

~~*ACCESSIBLE SPACE is a space that complies with the regulations adopted by the Division of the State Architect-Access Compliance.*~~

~~*ADAPTABILITY is the capability of spaces or facilities to be readily modified and made accessible.*~~

~~*ADMINISTRATIVE AUTHORITY is a governmental agency that adopts or enforces regulations and guidelines for the design, construction, or alteration of buildings and facilities.*~~

~~*AISLE is a circulation path between objects such as seats, tables, merchandise, equipment, displays, shelves, desks, etc. that provides clearances in conformance with this chapter.*~~

~~*AISLE, EMPLOYEE AREAS (as required for architectural accessibility) is a space that serves as a passageway, which is created by architectural components such as walls, fixed cabinetry or fixtures and not moveable components such as furniture.*~~

~~*AREA OF REFUGE. See Section 1002.1.*~~

~~*ASSEMBLY AREA is a room or space accommodating a group of individuals for recreational, educational, political, social or amusement purposes, or for the consumption of food and drink.*~~

~~*AUTOMATED TELLER MACHINE (ATM) means any electronic information processing device which accepts or dispenses cash in connection with a credit, deposit, or convenience account. The term does not include devices used solely to facilitate check guarantees or check authorizations, or which are used in connection with the acceptance or dispensing of cash on a person-to-person basis, such as by a store cashier.*~~

~~*AUTOMATIC DOOR is a door equipped with a power operated mechanism and controls that open and close the door automatically upon receipt of a momentary actuating signal. The switch that begins the automatic cycle may be a photoelectric device, floor mat or manual switch.*~~

~~*CIRCULATION PATH is an exterior or interior way of passage from one place to another for pedestrians, including, but not limited to, walks, hallways, courtyards, stairways and stair landings.*~~

~~*CLEAR means unobstructed.*~~

~~*CLEAR FLOOR SPACE is the minimum unobstructed floor or ground space required to accommodate a single, stationary wheelchair and occupant.*~~

~~*CLOSED-CIRCUIT TELEPHONE is a telephone with dedicated line(s) such as a house phone, courtesy phone or phone that must be used to gain entrance to a facility.*~~

~~*COMMON USE AREAS are those interior and exterior rooms, spaces or elements that are made available for the use of a restricted group of people (for example, occupants of a homeless shelter, the occupants of an office building or the guests of such occupants).*~~

~~*COMPLY WITH means to meet one or more specifications of these regulations.*~~

~~*CROSS SLOPE is the slope that is perpendicular to the direction of travel (as differentiated from running slope).*~~

~~*CURB CUT is an interruption of a curb at a pedestrian way, which separates surfaces that are substantially at the same elevation.*~~

~~*CURB RAMP is a sloping pedestrian way, intended for pedestrian traffic, which provides access between a walk or sidewalk and a surface located above or below an adjacent curb face, as differentiated from a ramp.*~~

~~*DETECTABLE WARNING is a standardized surface or feature built into or applied to walking surfaces or other elements to warn visually impaired persons of hazards in the path of travel. Only approved DSA-AC detectable warning products and directional surfaces shall be installed as provided in the California Code of Regulations (CCR). Title 24, Part 1, Articles 2, 3 and 4. Refer to CCR Title 24, Part 12, Chapter 12-11A and B, for building and facility access specifications for product approval for detectable warning products and directional surfaces.*~~

~~*Detectable warning products and directional surfaces installed after January 1, 2001, shall be evaluated by an independent entity, selected by the Department of General Services, Division of the State Architect-Access Compliance, for all occupancies, including transportation and other outdoor environments, except that when products and surfaces are for use in residential housing evaluation shall be in consultation with the Department of Housing and Community Development. See Government Code Section 4460.*~~

~~*DWELLING UNIT is a single unit of residence for a family of one or more persons. Examples of dwelling units covered by this chapter include condominiums, an apartment unit within an apartment building and other types*~~

~~*of dwellings in which sleeping accommodations are provided but toileting or cooking facilities are shared by occupants of more than one room or portion of the dwelling. Examples of the latter include dormitory rooms and sleeping accommodations in shelters intended for occupancy as residences for homeless persons.*~~

~~*ELEMENT is an architectural or mechanical component of a building, facility, space or site; for example, a telephone, curb ramp, door, drinking fountain, seating or water closet.*~~

~~*ELEVATOR, PASSENGER is an elevator used primarily to carry passengers.*~~

~~*ENTRANCE means any access point to a building or portion of a building or facility used for the purpose of entering. An entrance includes the approach walk, the vertical access leading to the entrance platform, the entrance platform itself, vestibules if provided, the entry door(s) or gate(s), and the hardware of the entry door(s) or gate(s).*~~

~~*EQUIVALENT FACILITATION is an alternate means of complying with the literal requirements of these standards and specifications that provides access in terms of the purpose of these standards and specifications. See Section 1.9.1.5.*~~

~~*EXIT. See Section 1002.1.*~~

~~*FACILITY (or FACILITIES) is a building, structure, room, site, complex or any portion thereof that is built, altered, improved or developed to serve a particular purpose. Facilities shall include all or any portion of buildings, structures, site developments, complexes, equipment, roads, walks, sidewalks, passageways, parking lots or other real or personal property located on a site.*~~

~~*GRAB BAR is a bar for the purpose of being grasped by the hand for support.*~~

~~*GUARD (or GUARDRAIL). See Section 1002.1.*~~

~~*HANDRAIL. See Section 1002.1.*~~

~~*HEALTH CARE PROVIDER. See "Professional office of a health care provider."*~~

~~*IF, IF…THEN denotes a specification that applies only when the conditions described are present.*~~

~~*INDEPENDENT ENTITY. See Section 202. Detectable warning products and directional surfaces installed after January 1, 2001, shall be evaluated by an independent entity, selected by the Department of General Services, Division of the State Architect—Access Compliance, for all occupancies, including transportation and other outdoor environments, except that when products and surfaces are for use in residential housing evaluation shall be in consultation with the Department of Housing and Community Development. See Government Code Section 4460.*~~

~~*INTERNATIONAL SYMBOL OF ACCESSIBILITY is that symbol adopted by Rehabilitation International's 11th World Congress for the purpose of indicating that buildings and facilities are accessible to persons with disabilities. See Figure 11B-6.*~~

~~*KICK PLATE is an abrasion-resistant plate affixed to the bottom portion of a door to prevent a trap condition and protect its surface.*~~

~~*LEVEL AREA is a specified surface that does not have a slope in any direction exceeding one unit vertical in 50 unit's horizontal (2-percent slope).*~~

~~*LIFT, PLATFORM (WHEELCHAIR). See "Platform (Wheelchair) Lift."*~~

~~*MARKED CROSSING is a crosswalk or other identified path intended for pedestrian use in crossing a vehicular way.*~~

~~*MAY denotes an option or alternative.*~~

~~*NEWLY CONSTRUCTED. See Chapter 11A, Section 1107A.14.N.*~~

~~*NOSE, NOSING is that portion of a stair tread or landing at the top of a stairway flight projecting beyond the face of the riser immediately below.*~~

~~*OPEN RISER is the space between two adjacent stair treads not closed by a riser.*~~

~~*OPERABLE PART is a part of a piece of equipment or appliance used to insert or withdraw objects, or to activate, deactivate or adjust the equipment or appliance (for example, coin slot, pushbutton, handle).*~~

~~*PASSAGE DOOR is a door other than an exit door through which persons may traverse.*~~

~~*PATH OF TRAVEL is a passage that may consist of walks and sidewalks, curb ramps and pedestrian ramps, lobbies and corridors, elevators, other improved areas or a necessary combination thereof, that provides free and unobstructed access to and egress from a particular area or location for pedestrians and/or wheelchair users. A "path of travel" includes a continuous, unobstructed way of pedestrian passage by means of which a particular area may be approached, entered and exited, and which connects a particular area with an exterior approach (including sidewalks, streets, and parking areas), an entrance to the facility, and other parts of the facility. In existing buildings, when alterations, structural repairs or additions are made, the term "path of travel" also includes the sanitary facilities, telephones, drinking fountains and signs serving the altered area.*~~

~~*PEDESTRIAN is an individual who moves in walking areas with or without the use of walking assistive devices such as crutches, leg braces, wheelchairs, white cane, service animal, etc.*~~

~~*PEDESTRIAN GRADE SEPARATION is a structure erected over or under an obstacle such as a freeway, roadway, street, railroad, stream, etc., and intended primarily for pedestrian use.*~~

~~*PEDESTRIAN WAY is a route by which a pedestrian may pass.*~~

~~*PLATFORM. See Section 410.2.*~~

~~*PLATFORM (WHEELCHAIR) LIFT is a hoisting and lowering mechanism equipped with a car or platform or support that serves two landings of a building or structure and is designed to carry a passenger or passengers and (or) luggage or other material a vertical distance as may be allowed.*~~

~~*POINT-OF-SALE DEVICE means any device used for the purchase of a good or service where a personal identification number (PIN), zip code or signature is required.*~~

~~*PROFESSIONAL OFFICE OF A HEALTH CARE PROVIDER is a location where a person or entity, regulated by the State to provide professional services related to the physical or mental health of an individual, makes such services available to the public. The facility housing the professional office of a health care provider only includes floor levels housing at least one health care provider, or any floor level designed or intended for use by at least one health care provider.*~~

~~*PUBLIC USE AREA means interior or exterior rooms or spaces of a building that are made available to the general public and does not include common use areas. Public use areas may be provided at a building that is privately or publicly owned.*~~

~~*PUBLIC WAY. See Section 1002.1.*~~

~~*RAMP is a walking surface which has a running slope greater than one unit vertical in 20 units horizontal (5-percent slope) intended for pedestrian traffic and as differentiated from a curb ramp.*~~

~~*RISER is the upright member between two adjacent stair treads.*~~

~~*RUNNING SLOPE is the slope that is parallel to the direction of travel (as differentiated from cross slope).*~~

~~*SHALL denote a mandatory specification or requirement.*~~

~~*SHOPPING CENTER (or SHOPPING MALL) is one or more sales or rental establishments or stores. A shopping center may include a series of buildings on a common site, connected by a common pedestrian access route on, above or below the ground floor, that is either under common ownership or common control or developed either as one project or as a series of related projects. For the purposes of this section, "shopping center" or "shopping mall" includes a covered mall building.*~~

~~*SHOULD denote an advisory specification or recommendation.*~~

~~*SIDEWALK. See Section 202.*~~

~~*SLEEPING ACCOMMODATIONS are rooms in which people may sleep; for example, dormitory and hotel or motel guest rooms or suites.*~~

~~*SPECIFIED PUBLIC TRANSPORTATION is transportation by bus, rail or any other conveyance (other than by aircraft) that provides the general public with general or special service (including charter service) on a regular and continuing basis.*~~

~~*STAGE. See Section 410.2.*~~

~~*STAIR. See Section 1002.1.*~~

~~*STAIRWAY. See Section 1002.1.*~~

~~*STORY means that portion of a building included between the upper surface of any floor and the upper surface of the floor next above, except that the topmost story shall be that portion of a building included between the upper surface of the topmost floor and the ceiling or roof above. If the finished floor level directly above a basement or unused under-floor space is more than six feet (1829 mm) above grade for more than 50 percent of the total perimeter or is more than 12 feet (3658 mm) above grade at any point, the basement or unused under-floor space shall be considered as a story. There may be more than one floor level within a story as in the case of a mezzanine or mezzanines.*~~

~~*STORY, FIRST means the lowest story in a building which qualifies as a story and which provides the basic services or functions for which the building is used. A floor level in a building having only one floor level shall be classified as a first story, if the floor level is not more than 4 feet (1219 mm) below grade, for more than 50 percent of the total perimeter, or more than 8 feet (2438 mm) below grade at any point.*~~

~~*STRUCTURAL FRAME is considered to be the columns and the girders, beams, trusses and spandrels having direct connections to the columns and all other members which are essential to the stability of the building as a whole.*~~

~~*TEXT TELEPHONE is machinery or equipment that employs interactive text-based communications through the transmission of coded signals across the standard telephone network. Text telephones can include, for example, devices known as TTYs (teletypewriters) or computers.*~~

~~*TRANSIENT LODGING is a building, facility or portion thereof, excluding inpatient medical care facilities that contains one or more dwelling units or sleeping accommodations. Transient lodging may include, but is not limited to, resorts, group homes, hotels, motels and dormitories.*~~

~~*TRANSIT BOARDING PLATFORM is a horizontal, generally level surface, whether raised above, recessed below or level with a transit rail, from which persons embark/disembark a fixed rail vehicle.*~~

~~*TREAD is the horizontal member of a step.*~~

~~*VEHICULAR WAY is a route intended for vehicular traffic, such as a street, driveway or parking lot.*~~

~~*WALK is a surfaced pedestrian way not located contiguous to a street used, by the public. (As differentiated*~~

~~*from the definition of "Sidewalk" in Section 202.)*~~

~~*WORK STATION is an area defined by equipment and/or work surfaces intended for use by employees only, and generally for one or a small number of employees at a time. Examples include ticket booths; the employee side of grocery store checkstands; the bartender area behind a bar; the employee side of snack bars, sales counters and public counters; guardhouses; toll booths; kiosk vending stands; lifeguard stations; maintenance equipment closets; counter and equipment areas in restaurant kitchens; file rooms; storage areas; etc.*~~

~~*SECTION 1103B*~~
~~*BUILDING ACCESSIBILITY*~~

~~*1103B.1 Scope. Accessibility to buildings or portions of buildings shall be provided for all occupancy classifications except as modified or enhanced by this chapter. Occupancy requirements in this chapter may modify general requirements, but never to the exclusion of them. When a building or facility contains more than one use, the occupancy specific accessibility provisions for each portion of the building or facility shall apply.*~~

~~*An accessible route of travel complying with Section 1114B.1.2 shall connect all elements and spaces within a building or facility. Multistory buildings and facilities must provide access to each level, including mezzanines, by ramp or passenger elevator complying with Section 1116B. If more than one elevator is provided, each passenger elevator shall comply with Section 1116B.*~~

~~*Exceptions:*~~

1. ~~*Floors or portions of floors not customarily occupied, including, but not limited to, nonoccupiable or employee spaces accessed only by ladders, catwalks, crawl spaces, very narrow passageways or freight (nonpassenger) elevators, and frequented only by service personnel for repair or maintenance purposes, including, but not limited to, elevator pits and elevator penthouses, piping and equipment catwalks, and machinery rooms.*~~

2. ~~*The following types of privately funded multistory buildings do not require a ramp or elevator above and below the first floor:*~~

   ~~*2.1 Multistoried office buildings (other than the professional office of a health care provider) and passenger vehicle service stations less than three stories high or less than 3,000 square feet (279 m^2) per story.*~~

   ~~*2.2 Any other privately funded multistoried building that is not a shopping center, shopping mall or the professional office of a health care provider, or a terminal, depot or other station used for specified public transportation, or an airport passenger terminal and that is less than three stories high or less than 3,000 square feet (279 m^2) per story if a reasonable portion of all facilities and accommodations normally sought and used by the public in such a building are accessible to and usable by persons with disabilities.*~~

~~*The elevator exception set forth in this section does not obviate or limit in any way the obligation to comply with the other accessibility requirements in this code. For example, floors above or below the accessible ground floor must meet the requirements of this section except for elevator service. If toilet or bathing facilities are provided on a level not served by an elevator, then toilet or bathing facilities must be provided on the accessible ground floor.*~~

~~*If a building or facility is eligible for this exception but a passenger elevator is nonetheless planned, that elevator shall meet the requirements of Section 1116B and shall serve each level in the building. A passenger elevator that provides service from a garage to only one level of a building or facility is not required to serve other levels.*~~
~~*In existing buildings, where elevators are required by Section 1134B.2 or 1103B.1, if an escalator or stair is installed where none existed previously and major structural modifications are necessary for such installation, then a means of accessible vertical access via ramp, elevator or lift shall be provided.*~~

~~*1103B.2 Distance to elevators. In new construction of buildings where elevators are required by Section 1103B.1, and which exceed 10,000 square feet (929 m^2) on any floor, an accessible means of vertical access via ramp, elevator or lift shall be provided within 200 feet (60 960 mm) of travel of each stair and each escalator. In existing buildings that exceed 10,000 square feet (929 m^2) on any floor and in which elevators are required by Sections 1134B.2 and 1103B.1, whenever a newly constructed means of vertical access is provided via stairs or an escalator, an accessible means of vertical access via ramp, elevator or lift shall be provided within 200 feet (60 960 mm) of travel of each new stair or escalator.*~~

~~*Exception: Stairs used solely for emergency egress.*~~

~~*SECTION 1104B*~~
~~*ACCESSIBILITY FOR GROUP A OCCUPANCIES*~~

~~*1104B.1 General. All Group A occupancies shall be accessible as provided in this chapter. See also the general requirements in Section 1114B.1.1.*~~

~~*1104B.2 Assistive-listening systems in assembly areas. Assembly areas, conference and meeting rooms shall provide assistive-listening systems for persons with hearing impairments as provided in this section.*~~

~~*Exception: This section does not apply to systems used exclusively for paging, or background music, or a combination of these two uses.*~~

1. ~~*Number of personal receivers required. The minimum number of receivers to be provided shall be equal to 4 percent of the total number of seats, but in no case less than two.*~~

2. ~~*Types of listening systems. Types of assistive-listening systems include, but are not limited to, audio-induction loops, radio frequency systems (AM or FM) and infrared transmission.*~~

3. ~~*Location. If the assistive-listening system provided is limited to specific areas or seats, then such areas or seats shall be within a 50-foot (15 240 mm) viewing distance of the stage or playing area and shall have a complete view of the stage or playing area.*~~

4. ~~*Signage. A sign shall be posted in a prominent place (for example, a customer service counter, ticket booth or assembly area entrance) indicating the availability of assistive-listening devices. The sign complying with Section 1117B.5.1, Items 2 and 3 shall include the International Symbol of Access for Hearing Loss complying with Figure 11B-14C and include wording that states "Assistive-Listening System Available."*~~

5. ~~*Fees and charges. Nothing in this section shall preclude a facility charging for such assistive-listening system its usual fee for audiovisual equipment. However, no surcharge may be placed directly on any particular individual with a disability or any group of individuals with disabilities to cover the costs of such equipment.*~~

6. ~~*Permanent and portable systems. Permanently installed assistive-listening systems are required in areas if (1) they accommodate at least 50 persons or if they have audio-amplification systems, and (2) they have fixed seating. If portable assistive-listening systems are used for conference or meeting rooms, the system may serve more than one room. An adequate number of electrical outlets or other supplementary wiring necessary to support a portable assistive-listening system shall be provided.*~~

~~*1104B.3 Auditoriums, assembly halls, theaters and related facilities.*~~

~~*1104B.3.1 Seating. In all assembly places where seating is provided, there shall be spaces for persons using wheelchairs and semi-ambulant persons, as provided in this section.*~~

~~*Exceptions:*~~

1. ~~*In existing buildings and facilities when the enforcing agency determines that compliance with the seating requirements of this code would create an unreasonable hardship, such*~~

~~*requirements shall not apply. When the unreasonable hardship finding is applied, at least 1 percent of the total seating provided shall be accessible to and usable by persons with disabilities who use wheelchairs, and such seating shall comply with the level requirements and the individual space requirements of this code.*~~

~~*2. When an existing theater is subdivided into more than one facility having upper levels not accessible by ramp or elevator, and the enforcing agency determines that full compliance with this code would create an unreasonable hardship, such upper levels need not be made accessible, provided all facilities at grade are accessible and any event, showing of motion pictures or other activities made available to the public in all of the facilities are scheduled to ensure that all such functions are available to the public in the accessible facility.*~~

~~*1104B.3.2 Accessibility to key facilities. Seating for persons with disabilities shall be accessible from the main lobby or from a primary entrance, together with related toilet facilities.*~~

~~*1104B.3.3 Variety of locations. Accessible seating or accommodations in places of public amusement and resort, including theaters, concert halls and stadiums, shall be provided in a variety of locations so as to provide persons with disabilities a choice of admission prices otherwise available to members of the general public.*~~

~~*1104B.3.4 Wheelchair spaces.*~~

~~*1. The number of such spaces is as shown in Table 11B-1.*~~

~~*TABLE 11B-1*~~
~~*WHEELCHAIR SEATING SPACES*~~

~~*SEATING CAPACITY*~~	~~*NO. OF WHEELCHAIR SEATING SPACES*~~
~~*4 to 25*~~	~~*1*~~
~~*26 to 50*~~	~~*2*~~
~~*51 to 150*~~	~~*4*~~
~~*151 to 300*~~	~~*5*~~
~~*301 to 500*~~	~~*6*~~
~~*501 to 5,000*~~	~~*6 plus 1 for each 100, or fraction thereof, between 501 through 5,000*~~
~~*5,001 and over*~~	~~*46, plus 1 for each 200, or fraction thereof, over 5,000*~~

~~*3. The ground or floor at spaces shall be level and shall comply with Section 1124B.*~~

~~*1104B.3.5 Placement of wheelchair locations. Wheelchair areas shall be an integral part of any fixed seating plan, and shall be arranged so as to provide persons with disabilities a choice of admission prices and lines of sight comparable to those for members of the general public. Each wheelchair area shall adjoin an accessible route which shall also serve as a means of egress in case of emergency. At least one companion fixed seat shall be provided next to each wheelchair seating area. When the seating capacity exceeds 300, wheelchair spaces shall be provided in more than one location in addition to complying with Section 1104B.3.3.*~~

~~*Exceptions:*~~

~~*1. Accessible viewing positions where seating capacity is less than 300 may be clustered for bleachers, balconies and other areas having sight lines that require slopes of greater than one unit vertical in 20 units horizontal (5-percent slope). Equivalent accessible viewing positions may be located on levels having accessible egress.*~~

~~*2. Where it is determined that dispersing accessible seating throughout an existing assembly area would create an unreasonable hardship, accessible seating areas may be clustered.*~~

~~*Each accessible seating area shall have provisions for companion seating and shall be located on an accessible route that also serves as a means of emergency egress.*~~

~~*1104B.3.6 Size of wheelchair location. Each wheelchair location shall provide minimum clear floor or ground space as shown in Figure 11B-15, and shall adjoin an egress aisle on at least one side.*~~

~~*1104B.3.7 Removable seats. Readily removable seats may be installed in these wheelchair spaces hen such spaces are not required to accommodate wheelchair users.*~~

~~*1104B.3.8 Seating for semi-ambulant individuals. In addition to spaces provided for wheelchair users as noted in Sections 1104B.3.4 through 1104B.3.7 above, there shall be provided seating for semi-ambulant individuals. The number of such seating shall be equal to at least 1 percent of the total seating and shall be no fewer than two. Such seats shall provide at least 24 inches (610 mm) clear leg space between the front of the seat to the nearest obstruction or to the back of the seat immediately in front.*~~

~~*1104B.3.9 Designated aisle seats. In addition to the wheelchair spaces required, 5 percent, but not less than one, of all aisle seats, shall be designated aisle seats with no armrests on the aisle side, or with removable or folding armrests on the aisle side. The designated aisle seats shall be those located closest to accessible routes. Each such seat shall be identified by a sign or marker with the International Symbol of Accessibility (see Figure 11B-6). Signage notifying patrons of the availability of such seats shall be posed at the ticket office. Signs and markers shall comply with Section 1117B.5.1 Items 2 and 3, as applicable.*~~

~~*1104B.3.10 Life safety. In determining the location of seating for persons with disabilities, life safety shall be considered, and all seating provided must comply with the fire and panic safety requirements of the State Fire Marshal.*~~

~~*1104B.3.11 Access to performing areas. An accessible route shall connect wheelchair seating locations with performing areas, including stages, arena floors, dressing rooms, locker rooms and other spaces used by performers.*~~

~~*1104B.3.12 Stages, enclosed and unenclosed platforms, and orchestra pits. Stages, enclosed and unenclosed platforms and orchestra pits shall be made accessible to persons with disabilities.*~~

~~*Exceptions:*~~

1. ~~*When the enforcing agency finds that requiring compliance with this code, for an enclosed or unenclosed platform or depressed area not more than 24 inches (610 mm) above or below an adjacent accessible level, would create an unreasonable hardship, the enclosed and unenclosed platform or depressed area shall be made accessible by a portable ramp with a slope not exceeding 1 unit vertical in 12 units horizontal (8.33 percent slope).*~~

2. ~~*In existing buildings and facilities, all stages, enclosed or unenclosed platforms, and orchestra pits need not be accessible when the enforcing agency determines that compliance with this code would create an unreasonable hardship.*~~

~~*1104B.3.13 Ticket booths. Customer and employee sides of ticket booths and of concession and refreshment sales facilities shall be made accessible to persons with disabilities.*~~

~~*1104B.3.14 Miscellaneous areas. Public toilets and other public areas shall be made accessible to persons with disabilities.*~~

~~*1104B.4 Stadiums, grandstands, bleachers, athletic pavilions, gymnasiums and miscellaneous sport-related facilities.*~~

~~*1104B.4.1 Spectator seating. Spectator seating shall comply with Section 1104B.3.*~~

~~*1104B.4.2 Ticket booth. Ticket booths shall comply with Section 1104B.3.13.*~~

~~1104B.4.3 Participation areas. Participation areas shall be accessible to persons with disabilities, including the following listed and similar activity areas:~~

~~1. Tennis, racquetball and handball courts.~~

~~2. Gymnasium floor areas and general exercise rooms.~~

~~3. Basketball, volleyball and badminton courts, and bowling lanes.~~

~~4. Swimming pool deck areas shall be accessible, and a mechanism to assist persons with disabilities in gaining entry into the pool and in exiting from the pool shall be provided. Such a mechanism may consist of a swimming pool lift device that meets all of the following criteria:~~

~~4.1. Have a seat that meets all of the following:~~

~~4.1.1. The seat shall be rigid;~~

~~4.1.2. The seat shall be not less than 17 inches (423 mm) and not more than 19 inches (483 mm), inclusive of any cushioned surface that might be provided, above the pool deck;~~

~~4.1.3. The seat shall have two armrests. The armrest on the side of the seat by which access is gained shall be either removable or fold clear of the seat;~~

~~4.1.4. The seat shall have a back support that is at least 12 inches (305 mm) tall;~~

~~4.1.5. The seat shall have an occupant restraint for use by the occupant of the seat, and the restraint shall meet the standards for operable controls in compliance with Section 1117B.6, Items 1 through 4.~~

~~4.2. Be capable of unassisted operation from both the deck and water levels.~~

~~4.3. Be stable and not permit unintended movement when a person is getting into or out of the seat.~~

~~4.4. Be designed to have a live-load capacity of not less than 300 pounds (137 kg).~~

~~4.5. Be positioned so that, if the pool has water of different depths, it will place the operator into water that is at least 3 feet (914 mm) deep.~~

~~4.6. Lower the operator at least 18 inches (457 mm) below the surface of the water.~~

~~5. Athletic team rooms and facilities, playing fields and running tracks.~~

~~1104B.4.4 Clubrooms. Clubrooms shall be made accessible to persons with disabilities.~~

~~1104B.4.5 Sanitary and locker facilities. Where spectator and/or participant sanitary and/or locker facilities are provided, they shall conform with the requirements in Section 1115B.~~

~~1104B.5 Dining, banquet and bar facilities.~~

~~1. General. Dining, banquet, and bar facilities shall be made accessible to persons with disabilities as provided in this section. All areas where each type of functional activity occurs shall be made accessible.~~

~~Exceptions:~~

~~1. In existing buildings, when the enforcing agency determines that compliance with any regulation under this section would create an unreasonable hardship, an exception shall be granted when equivalent facilitation is provided.~~

~~2. In existing buildings, these regulations shall not apply when legal or physical constraints would not allow compliance with these regulations or equivalent facilitation without creating an unreasonable hardship. See Section 1.9.1.5.~~

~~2. Entrance. Access to these facilities shall be provided at entrances and exits as required by Section 1133B.1.1.~~

~~3. Raised or sunken areas. All raised or sunken areas, including dining areas, loggias and outdoor seating areas, shall be accessible. A raised platform where a head table or speaker's lectern is located shall be accessible. Open edges of raised or sunken areas shall be protected as required by Sections 1013 Guards, 1133B.8.1 Warning Curbs, or by other means as required by this code. For existing buildings, see Section 1120B, Floors and Levels.~~

~~4. Seating. Each dining, banquet and bar area shall have one wheelchair seating space for each 20 seats, with at least one minimum wheelchair seating space per functional area. Such seating shall be designed and arranged to permit use by wheelchair occupants, and shall comply with Section 1122B, Fixed or Built-in Seating, Tables, and Counters. Access to such seating spaces shall be provided with main aisles not less than 36 inches (914 mm) clear width. In establishments where separate areas are designated for smoking and non-smoking patrons, the required number of accessible fixed tables (or counters) shall be proportionally distributed between the smoking and non-smoking areas. Accessible seating spaces shall be integrated with general seating to allow a reasonable selection of seating area and to avoid having one area specifically highlighted as the area for persons with disabilities. The ratio of accessible seating is based on the total number of seats provided. Where food or drink is served at counters exceeding 34 inches (865 mm) in height for consumption by customers seated or standing at the counter, a portion of the main counter which is 60 inches (1525 mm) in length minimum shall be provided in compliance with Section 1122B.~~

~~5. Food service aisles. Food service aisles shall be a minimum of 36 inches (914 mm) of clear width with a preferred width of 42 inches (1067 mm) where passage of stopped wheelchairs by pedestrians is desired. Tray slides shall be mounted no higher than 34 inches (864 mm) above the floor as shown in Figure 11B-16. If self-service shelves are provided, at least 50 percent of each type must be within the reach ranges in Sections 1118B.5 and 1118B.6.~~

~~6. Tableware and condiment areas. Self-service tableware, dishware, condiments, food and beverage display shelves and dispensing devices shall comply with Sections 1118B and 1122B.4. See Figure 11B-17.~~

~~7. Restrooms. Restrooms and powder rooms shall conform to the requirements in Section 1115B.~~

~~8. Food preparation areas. Access to food preparation areas shall comply with the provisions for entrance doors and doorways in Section 1008, and aisles in Sections 1014.4 and 1014.4.1 1017 and 1017.2.~~

~~1104B.6 Religious facilities.~~

~~1104B.6.1 General. Religious facilities shall be made accessible to persons with disabilities as provided in this section.~~

~~Exception: In existing buildings, when the enforcing agency determines that compliance with any regulation under this section would create an unreasonable hardship, an exception shall be granted when equivalent facilitation is provided.~~

~~1104B.6.2 Sanctuary. Sanctuary areas shall be made accessible to persons with disabilities.~~

~~*1104B.6.2.1 Wheelchair seating spaces in these areas shall conform to the requirements in Section 1104B.3.1.*~~

~~*1104B.6.2.2 Wheelchair access shall be provided to raised platforms, choir rooms, choir lofts, performing areas and other similar areas.*~~

~~*Exception: In existing buildings, these regulations shall not apply to choir lofts when the enforcing agency determines that such compliance would create an unreasonable hardship.*~~

~~*1104B.6.3 Assembly areas. Assembly areas shall be made accessible to persons with disabilities. Enclosed and unenclosed platforms and stages in assembly areas shall conform to these requirements.*~~

~~*1104B.6.4 Classrooms and offices. Classrooms and offices shall have entry doors that conform to the requirements in Chapter 10.*~~

~~*1104B.6.5 Sanitary facilities. Sanitary facilities shall conform to the requirements in Section 1115B.*~~

~~*SECTION 1105B*~~
~~*ACCESSIBILITY FOR GROUP B OCCUPANCIES*~~

~~*Group B occupancies shall be accessible as provided in this chapter. See also the general requirements in Section 1114B.1.1.*~~

~~*Exceptions:*~~

1. ~~*In existing buildings, when the enforcing agency determines that compliance with any regulation under this section would create an unreasonable hardship, an exception shall be granted when equivalent facilitation is provided.*~~

2. ~~*In existing buildings, the provisions of this section shall not apply when legal or physical constraints will not allow compliance with these building standards or equivalent facilitation without creating an unreasonable hardship. See Section 1.9.1.5.*~~

3. ~~*For floors and levels in new and existing buildings, see Section 1120B.*~~

~~*1105B.1 General. The provisions of this section apply to the specified types of facilities and identify specific requirements of accessibility and usability which shall be provided for each of the listed occupancy uses.*~~

~~*1105B.2 Group B occupancies. Group B Occupancies used for assembly purposes shall conform to the requirements as specified in Section 1114B.1.1. For floors and levels in dining, banquet and bar facilities, see Section 1120B.*~~

~~*1105B.3 Office buildings and personal and public service facilities. Office buildings and personal and public service facilities shall conform to the provisions of this section.*~~

~~*1105B.3.1 Facilities covered. Facilities covered in this section are those that are used by the public as customers, clients, visitors or which are potentially places of employment and shall include, but not be limited to, the following requirements:*~~

1. ~~*All types of general and specialized business professional offices, including those related to professional medicine or dentistry, insurance, real estate, attorneys, credit bureaus, consultants, counseling and accounting.*~~

2. ~~*All types of sales establishments, including outlets for all general and special merchandise and equipment, including personal and household furnishings and supplies, foods, sporting equipment, office supplies, vehicles and related parts and supplies, building materials and pet shops.*~~

~~3. All personal and public service facilities, including banks, savings and loan companies, credit unions, newspaper and printing establishments, photographic studios, launder mats, cleaning and laundry outlets, veterinarian clinics and hospitals, automobile rental agencies, travel bureaus, public utility facilities, police stations and detention facilities, courtrooms and fire stations.~~

~~4. In addition to the requirements of this section, all areas used for business transactions with the public shall comply with Sections 1110B.1 Sales and 1122B Fixed or Built in Seating, Tables, and Counters.~~

~~1105B.3.2 Business and professional offices. Areas to be made accessible include the following:~~

~~1. Client and visitor areas and office areas, together with related toilet rooms.\~~

~~2. Conference rooms, counseling rooms or cubicles and similar areas.~~

~~3. Employee work areas shall have a minimum of 36 inches (914 mm) clear width access, except as modified in other portions of these regulations. See Sections 1133B.6.1 and 1133B.6.2.~~

~~4. Professional medical and dental offices shall be made accessible and shall also comply with Section 1109B.~~

~~1105B.3.3 Personal and public service facilities. Areas to be made accessible include the following:~~

~~1. Client and visitor areas, office areas, and related toilet rooms shall be made accessible.~~

~~2. Employee work areas shall have a minimum of 36 inches (914 mm) clear width access, except as modified in other portions of these regulations. See Sections 1133B.6.1 and 1133B.6.2.~~

~~3. Automated teller machines used by a financial institution and its customers for the primary purposes of executing financial transactions shall be located on an accessible route of travel complying with Section 1114B.1.2 and shall comply with Section 1117B.7.~~

~~1105B.3.4 Public utility facilities. Areas to be made accessible include the following:~~

~~1. Office areas, meeting rooms and similar areas together with related toilet rooms shall be made accessible.~~

~~2. Public tour areas, to the extent that such public tours are conducted through or about a facility, or where the public is permitted to walk in such areas, shall provide accessibility in those portions of the facility and grounds where this occurs.~~

~~Exceptions:~~

~~1. Facilities located in operational areas which would not have any reasonable availability to or usage by persons who use wheelchairs for mobility are not subject to the wheelchair accessibility requirements of these regulations.~~

~~2. When the enforcing agency determines that compliance with this subsection would create an unreasonable hardship, an exception to such provision shall be granted when equivalent facilitation is provided.~~

~~3. Visitor overlook facilities, orientation areas and similar public use areas, and any sanitary facilities that serve these facilities shall be made accessible.~~

~~4. Where public parking is provided, spaces shall be provided for persons with disabilities as specified in Sections 1129B and 1130B.~~

~~1105B.3.5 Police department, law enforcement, fire department facilities and courtrooms. Areas to be made accessible include the following:~~

~~1. Office areas, conference rooms, classrooms, dispatch rooms and similar areas, along with related sanitary facilities, shall be made accessible.~~

~~2. Detention area visitor rooms shall be made accessible.~~

~~3. At least one detention cell facility with supporting sanitary facilities shall be made accessible.~~

~~4. Courtroom areas, including the judge's chambers and bench, counsel tables, jury box, witness stand and public seating area shall be made accessible.~~

~~1105B.3.6 Miscellaneous general standards.~~

~~1. Circulation aisles and pedestrian ways shall be sized according to functional requirements and in no case shall be less than 36 inches (914 mm) in clear width.~~

~~2. Storage areas. The doorway providing access to all such areas shall not be less than 32 inches (813 mm) in clear width. Storage areas shall be made accessible in the number and dimensions provided in Section 1125B.~~

~~SECTION 1106B~~
~~ACCESSIBILITY FOR GROUP E OCCUPANCIES~~

~~1106B.1 General. Group E occupancies shall be accessible as provided in this chapter. See also the general requirements in Section 1114B.1.1.~~

~~Exceptions:~~

~~1. In existing buildings, when the enforcing agency determines that compliance with any regulation under this section would create an unreasonable hardship, an exception shall be granted when equivalent facilitation is provided.~~

~~2. In existing buildings, where the enforcing agency determines that, because of physical constraints, compliance with these regulations or equivalent facilitation would create an unreasonable hardship, these regulations shall not apply. See Section 109.1.5 1.9.1.5.~~

~~1106B.2 Laboratory rooms. Laboratory rooms shall have at least one workstation and at least 5 percent of all workstations accessible to and usable by persons with disabilities in compliance with Section 1118B, Space Allowance and Reach Ranges, and Section 1122B, Fixed or Built-in Seating, Tables, and Counters.~~

~~Exception: Where the enforcing agency determines that it would create an unreasonable hardship to require compliance with these regulations for special-use rooms such as laboratory preparation rooms, supply rooms, small research laboratories, and areas containing specialized equipment not readily usable by persons with particular disabilities, such facilities need not comply with these regulations, except that a clear width of 32 inches (813 mm) shall be maintained into such rooms.~~

~~1106B.3 Teaching facility cubicles, study carrels, etc. Teaching facility cubicles, study carrels, etc., shall have 5 percent, but always at least one cubicle or carrel in each group (language, dental, audiovisual, typing, drafting, darkrooms, etc.) made accessible to and usable by persons with disabilities in compliance with Section 1118B, Space Allowance and Reach Ranges, and Section 1122B, Fixed or Built-in Seating, Tables and Counters.~~

~~1106B.4 Library general use areas.~~

~~1. General. Library general use areas such as those housing card files, book stacks, periodicals, reading and study areas, reference areas, information desks, circulation counters, reserve areas, special facilities or collections, etc., shall be made accessible to persons with disabilities.~~

~~2. Open book stacks. Open book stacks (those available for customer use) shall be on an accessible~~

~~*route complying with Section 1114B.1.2, may be of normal height, and shall have main aisles no less than 44 inches (1118 mm) in clear width and side, range and end aisles no less than 36 inches (914 mm) in clear width.*~~

~~*In existing buildings, multitiered, closed book stacks (those restricted to employee use) are exempt from these accessibility standards.*~~

3. ~~*Height of book shelves. Unless an attendant is available to assist persons with disabilities, all book shelving shall be located not more than 54 inches (1372 mm) above the floor.*~~

4. ~~*Card catalogs and magazine displays. Minimum clear aisle space and maximum reach heights at card catalogs and magazine displays shall comply with Sections 1118B.5 and 1118B.6.*~~

5. ~~*Reading and study areas. At least 5 percent or a minimum of one of each element of fixed seating, tables, study carrels, computers or similar workstations shall be on an accessible route complying with Section 1114B.1.2, and shall comply with Section 1118B, "Space Allowance and Reach Ranges", Section 1122B, "Fixed or Built-in Seating, Tables, and Counters" and Section 1133B.6 "Aisles".*~~

6. ~~*Check-out areas. At least one lane at each check-out area shall be on an accessible route complying with Section 1114B.1.2, and shall have a portion of the counter which is at least 36 inches (914 mm) in length with a maximum height of 34 inches (864 mm) above the finish floor with a 36 inch (914 mm) wide aisle on the customer side. Any traffic control or book security gates or turnstiles shall comply with Section 1133B.2.3.4.*~~

~~*SECTION 1107B*~~
~~*FACTORIES AND WAREHOUSES*~~

~~*Factories and warehouses shall conform to the provisions of this section, Section 1103B.1 and 1103B.1, Exception 2, for multistory buildings. See also the general requirements in Section 1114B.1.1.*~~

~~*Exception: In existing buildings, when the enforcing agency determines that compliance with any regulation under this section would create an unreasonable hardship, an exception shall be granted when equivalent facilitation is provided.*~~

~~*1107B.1 Factories.*~~

1. ~~*Major or principal floor areas shall be made accessible.*~~

2. ~~*Office areas shall be made accessible.*~~

3. ~~*Sanitary facilities serving these areas shall be made accessible.*~~

~~*1107B.2 Warehouses.*~~

1. ~~*Miscellaneous warehousing areas which are located on the floor nearest grade and those areas on other floors that are otherwise provided with access by level entry, ramp or elevator shall be made accessible.*~~

2. ~~*Office areas shall be made accessible.*~~

3. ~~*Sanitary facilities serving these areas shall be made accessible.*~~

~~*SECTION 1108B*~~
~~*ACCESSIBILITY FOR GROUP H OCCUPANCIES*~~

~~*1108B.1 General. Group H occupancies shall be accessible as provided in this chapter. See also the general requirements in Section 1114B.1.1.*~~

~~*Exceptions:*~~

1. ~~*In existing Group H occupancies, when the enforcing agency determines that compliance with any regulation under this section would create an unreasonable hardship, an exception shall be granted when equivalent facilitation and protection are provided.*~~

2. ~~*In existing Group H occupancies, the provisions of this section shall not apply when legal or physical constraints prevent compliance with these building standards or the provisions of equivalent facilitation without creating an unreasonable hardship. See Section 1.9.1.5.*~~

~~*1108B.2 Accessible sanitation facilities. Accessible sanitation facilities in all Group H occupancies shall be provided as specified in this chapter.*~~

~~*1108B.3 Accessible routes. Entrances, stairs, ramps, doors, turnstiles, corridors, walks, sidewalks and hazards shall provide accessibility as specified in Section 1133B.*~~

~~*1108B.4 Accessible floors and levels. Accessible floors and levels shall comply with the requirements specified in this chapter.*~~

~~*1108B.5 Employee work areas. Employee work areas shall be accessible by means of a 36-inch (914 mm) minimum aisle width and a 32-inch (813 mm) minimum clear opening door width, as specified in Sections 1133B.6.1 and 1133B.6.2.*~~

~~*1108B.6 Accessible facilities covered in this chapter are those that are used by the public as customers, clients, visitors or which are potential places of employment.*~~

~~*SECTION 1109B*~~
~~*ACCESSIBILITY FOR GROUP I OCCUPANCIES*~~

~~*1109B.1 General. All Group I occupancies shall be accessible as provided in this chapter. See also the general requirements in Section 1114B.1.1.*~~

~~*Exception: In existing buildings, when the enforcing agency determines that compliance with any regulation under this section would create an unreasonable hardship, an exception shall be granted when equivalent facilitation is provided.*~~

~~*1109B.2 Entrance. At medical care facilities in which people receive physical or medical treatment or care and where persons may need assistance in responding to an emergency and where the period of stay may exceed twenty-four hours, at least one accessible entrance shall be protected from the weather by canopy or roof overhang. Such entrances shall incorporate a passenger loading zone complying with Section 11131B.2.*~~

~~*1109B.3 Patient bedrooms and toilet rooms. Patient bedrooms and associated toilet facilities shall be made accessible as follows:*~~

1. ~~*Long-term care facilities, including skilled nursing facilities, intermediate care facilities, bed and care and nursing homes shall have at least 50 percent of patient bedrooms and toilet rooms, and all public use and common use areas, accessible.*~~

2. ~~*General-purpose hospitals, psychiatric facilities and detoxification facilities shall have at least 10 percent of patient bedrooms and toilets, and all public use and common use areas, accessible.*~~

3. ~~*Hospitals and rehabilitation facilities that specialize in treating conditions that affect mobility, or units within either that specialize in treating conditions that affect mobility, shall have all patient bedrooms and toilets and all public use and common use areas accessible.*~~

~~*Exceptions:*~~

1. ~~In existing buildings, when patient bedrooms are being added or altered as part of a planned renovation of an entire wing, a department, or other discrete area of an existing medical facility, the accessible rooms provided shall comply with Section 1109B.4 and shall be consistent with the percentage of rooms required to be accessible by 1109B.3, until the number of accessible patient bedrooms in the facility equals the overall number that would be required if the facility were newly constructed. (For example, if 20 patient bedrooms are being altered in the obstetrics department of a hospital, 2 of the altered rooms must be made accessible. If, within the same hospital, 20 patient bedrooms are being altered in a unit that specializes in treating mobility impairments, all of the altered rooms must be made accessible.) Where toilet/bathrooms are part of patient bedrooms which are added or altered and required to be accessible, each such patient toilet/bathroom shall comply with Section 1109B.5.~~

2. ~~In existing buildings, when patient bedrooms are being added or altered individually, and not as part of an alteration of the entire area, the altered patient bedrooms shall comply with Section 1109B.4, unless either: a) the number of accessible rooms provided in the department or area containing the altered patient bedroom equals the number of accessible patient bedrooms that would be required if the percentage requirements of Section 1109B.3 were applied to that department or area; or b) the number of accessible patient bedrooms in the facility equals the overall number that would be required if the facility were newly constructed. Where toilet/bathrooms are part of patient bedrooms which are added or altered and required to be accessible, each such toilet/bathroom shall comply with Section 1109B.5.~~

~~1109B.4 Patient bedroom areas. Accessible patient bedrooms shall comply with the following requirements:~~

1. ~~Each bedroom shall have a turning space measuring 60 inches (1524 mm) clear in diameter, or that is a T-shaped space complying with Figure 11B-12. In rooms with two beds, it is preferable that this space be located between beds.~~

2. ~~Each bedroom shall have a minimum clear floor space of 36 inches (914 mm) along each side of the bed, and shall provide an accessible route to each side of the bed.~~

3. ~~Each bedroom shall have an accessible door that complies with Section 1133B.2.~~

~~1109B.5 Patient toilet rooms and bathing facilities. Patient toilet rooms and bathing facilities required to be accessible shall comply with Section 1115B.~~

~~1109B.6 Diagnostic and treatment areas. Diagnostic and treatment areas and, where applicable, at least one dressing room, sanitary facility, etc., for each unit or suite shall be made accessible.~~

~~1109B.7 Waiting areas, offices and sanitary facilities. Waiting areas, offices and sanitary facilities serving them shall be made accessible as covered in other portions of these standards.~~

~~1109B.8 Offices and suites. In buildings that house offices and suites of physicians, dentists, etc., all such offices or suites shall be made accessible, subject to other provisions of these regulations.~~

~~SECTION 1110B~~
~~ACCESSIBILITY FOR GROUP M OCCUPANCIES~~

~~1110B.1 Sales.~~

~~1110B.1.1 General areas. General sales, display and office areas together with related toilet rooms shall be made accessible. See also the general requirements in Section 1114B.1.1.~~

~~Exceptions:~~

1. ~~Minor specialized display areas that do not exceed 200 square feet (18.6 m^2) in floor area and to which the general public is excluded need not be made accessible.~~

~~2. Offices in sales facilities that do not exceed 5,000 square feet (465 m^2) in total area, that are located on nonaccessible levels, need not be made accessible.~~

~~1110B.1.2 Work areas. Sales employee workstations shall be located on accessible levels, and the customer side of sales or check-out stations shall be accessible. Employee work areas shall be sized and arranged to provide access to employees in wheelchairs.~~

~~1110B.1.3 Check stands. Where check stands are provided, the minimum number of check stands that are accessible shall be as shown in Table 11B-2. When not all check stands are accessible, accessible check stands shall be identified by a sign clearly visible to a person in a wheelchair displaying the International Symbol of Accessibility complying with Section 1117B.5.8. The sign shall be a minimum of 4 inches by 4 inches (102 mm by 102 mm). When check stands are open for customer use, a minimum of one accessible check stand shall always be available. As check stands are opened and closed based on fluctuating customer levels, the number of accessible check stands available shall comply with Table 11B-2.~~

~~TABLE 11B-2 CHECK STANDS~~

~~TOTAL NUMBER OF CHECK STANDS OF EACH DESIGN~~	~~MINIMUM NUMBER OF CHECK STANDS OF EACH DESIGN TO BE ACCESSIBLE~~
~~1 to 4~~	~~1~~
~~5 to 8~~	~~2~~
~~9 to 15~~	~~3~~
~~over 15~~	~~3 plus 20% of additional aisles~~

~~Accessible check stands shall provide a minimum clear checkout aisle width of 36 inches (914 mm) with a maximum adjoining counter height not exceeding 38 inches (965 mm) above the finish floor. The top of the counter lip shall not exceed 40 inches (1016 mm) above the finish floor.~~

~~In existing buildings, at least one checkout aisle shall be accessible in facilities with less than 5,000 square feet (465 m^2) of selling space. In facilities of 5,000 square feet (465 m^2) or more of selling space, at least one of each design of checkout aisle shall be made accessible when altered until the number of accessible checkout aisles of each design equals the number required in new construction.~~

~~Examples of checkout aisles of different design include those which are specifically designed to serve different functions. A different design includes, but is not limited to, the following features: length of belt or no belt, or permanent signage designating the aisle as an express lane.~~

~~1110B.1.4 Point-of-sale machines. All point-of-sale machines used by customers for the primary purpose of executing transactions between the business entity and the customer shall comply with Section 1117B.7.~~

~~1110B.1.5 Turnstiles. See Section 1133B.2.3.4.~~

~~1110B.1.6 Theft prevention barriers. Where shopping cart theft prevention barriers are used, they shall conform to the following requirements:~~

~~1. Each entrance and exit provided for public use shall be accessible to and usable by persons with disabilities.~~

~~2. Shopping cart barriers located at a public entrance or exit shall be designed to provide a clear, unobstructed opening at least 32 inches (813 mm) in width for ingress and egress of persons with disabilities.~~

~~3. Where gates are used, they shall open in the direction of travel, provide a clear unobstructed opening 32 inches (813 mm) in width and be maintained unlocked during business hours. Gates~~

~~shall not operate a publicly audible alarm system or require more than 5 foot-pounds of force (22.2 N·m).~~

4. ~~Where a clear unobstructed opening is provided, a level area is required on both sides of the clear opening or gate which extends a minimum of 44 inches (1118 mm) on each side of the opening and is at least 48 inches (1219 mm) in width.~~

5. ~~Where a gate is used, the level area on both sides of the clear opening or gate shall be a minimum of 60 inches (1524 mm) in width and extend a minimum of 60 inches (1524 mm) (measured from the gate in a closed position) in the direction of the gate swing. The level area opposite the gate swing shall be a minimum of 48 inches (1219 mm) in width and extend a minimum of 42 inches (1067 mm).~~

6. ~~Where a gate is used, the bottom of the gate shall be within 3 inches (76 mm) of the surface of the path of travel. The surface of the gate on each side shall be smooth to present no hazard to persons with disabilities using the gate and shall be structurally adequate to allow it to be opened with the wheelchair foot pedals.~~

7. ~~The path of travel to and through the clear opening or gate shall be designed to prevent barriers from obstructing it and shall be continuously maintained unobstructed during business hours. Also, the design shall specifically prevent parked vehicles from obstructing ingress and egress.~~

8. ~~Interior and exterior pedestrian traffic barriers (posts, rails, turnstiles, etc.) shall allow unobstructed travel for persons with disabilities through a 32-inch (813 mm) clear opening.~~

~~1110B.2 Miscellaneous general standards.~~

~~1110B.2.1 Circulation. Shelves or display units allowing self-service by customers in mercantile occupancies shall be located on an accessible route of travel complying with Section 1114B.1.2. Circulation aisles and pedestrian ways shall be sized according to functional requirements and in no case shall be less than 36 inches (914 mm) in clear width.~~

~~1110B.2.2 Storage areas. The doorway providing access to all such areas shall not be less than 32 inches (813 mm) in clear width. Storage areas shall be made accessible in the number and dimensions provided in Section 1125B.~~

~~SECTION 1111B~~
~~ACCESSIBILITY FOR GROUP R OCCUPANCIES~~

~~1111B.1 General. Group R occupancies shall be accessible or adaptable as provided in this chapter. Public-use and common use areas serving adaptable guest and/or dwelling units shall be accessible. See also the general accessibility requirements in Sections 1114B.1.1.~~

~~Exception: When the enforcing agency determines that compliance with any regulation under this section would create an unreasonable hardship, an exception shall be granted when equivalent facilitation is provided.~~

~~1111B.2 Public and common use rooms or areas. Public- and common use rooms and similar areas shall be made accessible to persons with disabilities, subject to specific provisions contained in other portions of these regulations. See also general requirements in Section 1114B.1.1.~~
~~At least one of each type of amenity (such as washers, dryers and similar equipment installed for the use of occupants) in each common area shall be accessible and shall be located on an accessible route to any accessible unit or sleeping accommodation.~~

~~Exception: Where elevators are not required, accessible amenities are not required on inaccessible floors as long as one of each type is provided in common areas on accessible floors.~~

~~1111B.3 Recreational facilities. When recreational facilities are provided, including swimming pools, they shall~~

~~*comply with Sections 1104B.4.3 and 1132B.2.*~~

~~*1111B.4 Hotels, motels, inns, dormitories, resorts, homeless shelters, halfway houses, transient group homes and similar places of transient lodging. Hotels, motels, inns, dormitories, resorts, homeless shelters, halfway houses, transient group homes and similar places of transient lodging shall provide access for persons with disabilities in accordance with the provisions of the accessibility requirements of this California Building Code, except as herein provided.*~~

~~*Facilities with multibed rooms or spaces shall comply with Sections 1111B.4.2 and 1111B.4.3.*~~

~~*Occupancies which are not homeless shelters but are being altered to provide shelter accommodations shall meet the requirements of this section.*~~

~~*1111B.4.1 Available range of accommodations. Accessible guest rooms or suites shall be dispersed among the various classes of sleeping accommodations to provide a range of options applicable to room sizes, costs, amenities provided and the number of beds provided.*~~

~~*1111B.4.2 Guest rooms and suites. Places of transient lodging shall incorporate the accessibility requirements of this code as modified by this chapter in at least one guest room or dormitory room together with their sanitary facilities as required in Table 11B-3. All accessible sleeping rooms or suites required by Table 11B-3 shall comply with the requirements of Section 1111B.4.5 for hearing impaired guests.*~~

~~*1111B.4.2.1 Spaces. Where provided as part of an accessible unit, sleeping room or suite, the following spaces shall be accessible and shall be on an accessible route complying with Section 1114B.1.2:*~~

~~*1. The living area;*~~

~~*2. The dining area;*~~

~~*3. At least one sleeping area;*~~

~~*4. Patios, terraces or balconies;*~~

~~*5. Where full bathrooms are provided, at least one full bathroom (that is, one with a water closet, a lavatory and a bathtub or shower);*~~

~~*6. Where only half baths are provided, at least one half bath;*~~

~~*7. Carports, garages or parking spaces.*~~

~~*1111B.4.2.2 Accessible route. Guest rooms and suites shall be on an accessible route complying with Section 1114B.1.2. An accessible route shall also connect all accessible spaces and elements, including telephones, within the unit, sleeping room or suite.*~~

~~*1111B.4.2.3 Doors.*~~

~~*1111B.4.2.3.1 Doors into and within covered rooms and suites. Doors and doorways designed to allow passage into and within all sleeping rooms, suites or other covered units shall comply with Section 1133B.2.*~~

~~*1111B.4.2.3.2 Doors into and within all other rooms and suites. Doors and doorways designed to allow passage into and within all other sleeping rooms and suites shall comply with Section 1133B.2.2.*~~

~~*1111B.4.2.4 Alterations in existing facilities. When guest rooms are being altered in an existing facility, or portion thereof, subject to the requirements of this section, at least one guest room or suite that*~~

~~*complies with the accessibility requirements of this code as modified by this chapter shall be provided for each 25 guest rooms, or fraction thereof, of rooms being altered until the number of such rooms provided equals the number required to be accessible in Table 11B-3. In addition, at least one guest room or suite that complies with the requirements of Section 1111B.4.5 shall be provided for each 25 guest rooms, or fraction thereof, of rooms being altered until the number of such rooms equals the number required to be accessible in Table 11B-4.*~~

~~*1111B.4.3 Access to beds. Accessible sleeping rooms shall have a 36-inch (914 mm) clear width maneuvering space located along both sides of a bed, except that where two beds are provided, this requirement can be met by providing a 36-inch-wide (914 mm) maneuvering space located between the beds.*~~

~~*In addition, there shall be a clear space under the bed for the use of a personal lift device. The clear space shall be on a long side of the bed adjacent to an accessible aisle. The clear space shall extend horizontally to points not more than 12 inches (305 mm) from each end of the bed, vertically not less than 7 inches (178 mm), and not less than 30 inches (762 mm) deep.*~~

~~*1111B.4.4 Kitchens, kitchenettes or wet bar facilities. When accommodations are provided with kitchens, kitchenettes, wet bar units or similar amenities, they shall be accessible and meet the requirements of Section 1133A. Kitchens shall be provided per the number required to be accessible in conformance with Table 11B-3.*~~

~~*1111B.4.5 Visible alarms, notification devices and telephones for persons with hearing impairments. In addition to those accessible sleeping rooms and suites required by Section 1111B.4.2, additional sleeping rooms and suites shall be provided with the following features as required by Table 11B-4 as follows:*~~

~~*1111B.4.5.1 Visible alarms. Visible alarms shall be provided and shall comply with NFPA 72 and Chapter 9, Section 907.5.2.3.*~~

~~*1111B.4.5.2 Visual notification devices. Visual notification devices shall also be provided in units, sleeping rooms and suites to alert room occupants of incoming telephone calls and a door knock or bell. Notification devices shall not be connected to visible alarm signal appliances.*~~

~~*1111B.4.5.3 Telephones. Permanently installed telephones shall have volume controls complying with Section 1117B.2.8; an accessible electrical outlet within 48 inches (1219 mm) of a telephone connection shall be provided to facilitate the use of a text telephone.*~~

~~*1111B.4.6 Bathrooms in hotels, motels, inns, dormitories, resorts, homeless shelters, halfway houses, transient group homes and similar places of transient lodging. Required accessible bathrooms for places of transient lodging shall comply with the following provisions:*~~

1. ~~*Doors. Doors to accessible bathrooms shall comply with Section 1133B.2. Doors shall not swing into the floor space required for any fixture.*~~

2. ~~*Clear floor space. All fixtures and controls shall be on an accessible route. There must be within the bathroom a clear floor space measuring 30 inches by 60 inches (762 mm by 1524 mm). The clear floor spaces at fixtures and controls, the accessible route and the turning space may overlap.*~~

3. ~~*Water closets. If a toilet compartment is provided, it shall comply with Section 1115B.3.1 or 1115B.3.2; its water closet shall comply with Section 1115B.4.1 of this code.*~~

4. ~~*Lavatory and mirrors. If a lavatory and/or mirror is provided, they shall comply with Sections 1115B.4.3 and 1115B.8.1, as applicable.*~~

5. ~~*Controls and dispensers. If controls, dispensers, receptacles or other types of equipment are provided, then at least one of each shall be on an accessible route and shall comply with Section 1117B.6, Controls and Operating Mechanisms.*~~

~~6. Bathing and shower facilities. If tubs or showers are provided, then at least one accessible tub that complies with Section 1115B.4.5 or at least one accessible shower that complies with Section 1115B.4.4 of this code shall be provided.~~

~~7. Toilet facilities. Toilet facilities shall comply with Section 1111B.4.6, as modified for hotel, motel and dormitory accommodations.~~

~~Hotel and motel bathrooms beyond those specified in Section 1111B.4 shall provide the following features:~~

~~1. All bathroom fixtures shall be in a location that allows a person using a wheelchair measuring 30 inches by 48 inches (762 mm by 1219 mm) to touch the wheelchair to any lavatory, urinal, water closet, tub, sauna, shower stall and any other similar sanitary installation, if provided.~~

~~2. All bathroom entrance doors shall have a clear opening width of 32 inches (813 mm) and shall be either sliding doors or shall be hung to swing in the direction of egress from the bathroom.~~

~~1111B.4.7 Storage areas. Fixed or built-in storage facilities located within accessible sleeping rooms or suites required by Table 11B-3 shall be accessible in the number and dimensions provided in Section 1125B.~~

~~1111B.4.8 Dormitory rooms. Dormitory rooms beyond those specified herein shall comply with the adaptability requirements of Section 1111B.5.~~

~~1111B.5 Buildings and complexes containing publicly funded dwelling units.~~

~~1111B.5.1 General. Buildings and complexes containing publicly funded dwelling units shall be accessible as required by Chapter 11A, Housing Accessibility, except that scoping requirements for covered multifamily dwellings include one or more publicly funded dwelling units, and is required to comply with Division IV - Accessibility for Existing Buildings, beginning with Section 1134B.~~

~~TABLE 11B-3 ADDITIONAL ACCESSIBILITY REQUIRED IN GUEST ROOMS OR SUITES*~~

~~TOTAL NUMBER OF ROOMS~~	~~FULLY ACCESSIBLE ROOMS~~	~~PLUS ADDITIONAL ACCESSIBLE ROOMS WITH ROLL-IN SHOWERS~~
~~1 to 25~~	~~0~~	~~1~~
~~26 to 50~~	~~1~~	~~1~~
~~51 to 75~~	~~3~~	~~1~~
~~76 to 100~~	~~4~~	~~1~~
~~101 to 150~~	~~5~~	~~2~~
~~151 to 200~~	~~6~~	~~2~~
~~201 to 300~~	~~7~~	~~3~~
~~301 to 400~~	~~8~~	~~4~~
~~401 to 500~~	~~9~~	~~4 plus 1 for each additional 100 over 400~~
~~501 to 1,000~~	~~2% of total~~	~~4 plus 1 for each additional 100 over 400~~
~~1,001 and over~~	~~20 plus 1 for each 100 over 1,000~~	

~~*Provisions of this chapter are additional modifications to general requirements listed in Section 1114B.1.1.~~

~~TABLE 11B-4~~
~~ADDITIONAL ACCESSIBILITY REQUIRED FOR HEARING IMPAIRED IN GUEST ROOMS*~~

~~TOTAL NUMBER OF ROOMS~~	~~NUMBER OF ROOMS EQUIPPED FOR HEARING IMPAIRED~~

~~1 to 25~~	~~1~~
~~26 to 50~~	~~2~~
~~51 to 75~~	~~3~~
~~76 to 100~~	~~4~~
~~101 to 150~~	~~5~~
~~151 to 200~~	~~6~~
~~201 to 300~~	~~7~~
~~301 to 400~~	~~8~~
~~401 to 500~~	~~9~~
~~501 to 1,000~~	~~2% of total~~
~~1,001 and over~~	~~20 plus 1 for each 100 over 1,000~~

~~*Provisions of this chapter are additional modifications to general requirements listed in Section 1114B.1.1. For Group I-1 and R-1 occupancies, also see Section 907.5.2.3.3.~~

~~**SECTION 1112B**~~
~~Reserved~~

~~**SECTION 1113B**~~
~~Reserved~~

~~**SECTION 1114B**~~
~~**FACILITY ACCESSIBILITY**~~

~~When buildings are required to be accessible, buildings and facilities shall be accessible as provided in this section.~~

~~1114B.1 Design and construction.~~

~~1114B.1.1 General. When accessibility is required by this chapter, it shall be designed and constructed to meet the minimum requirements of the following sections:~~

~~Chapter 11B, Accessibility; Division I, New Buildings; Division II, Site Accessibility; Division III, Accessibility for Entrances, Exits and Paths of Travel; and Division IV, Accessibility for Existing Buildings~~
~~Entrances – [for HCD 1-AC] Section 1120A.1; [for DSA-AC] Section 1133B.1.1~~

~~Doors – [for HCD 1-AC] Sections 1114A.4.4, 1117A.2, 1122A.3.4, 1126A, 1132A; [for DSA-AC] Section 1133B.2~~

~~Corridors – [for HCD 1-AC] Section 1120A; [for DSA-AC] Section 1133B.3~~

~~Stairways – [for HCD 1-AC] Sections 1115A.6, 1123A; [for DSA-AC] Section 1133B.4~~

~~Ramps – [for HCD 1-AC] Sections 1112A, 1114A, 1122A; [for DSA-AC] Section 1133B.5~~

~~Aisles – [for DSA-AC] Section 1133B.6~~

~~Walks and Sidewalks – [for HCD 1-AC] Section 1113A; [for DSA-AC] Section 1133B.7~~

~~Hazards – [for HCD 1-AC] Sections 1116A, 1125A; [for DSA-AC] Section 1133B.8~~

~~Elevators – [for HCD 1-AC] Section 3003; [for DSA-AC] Section 1116B~~

~~Platform (Wheelchair) Lifts – [for HCD 1-AC] Section 1124A; [for DSA-AC] Section 1116B.2~~
~~Alarms – [for DSA-AC] Chapter 9, Sections 907.9.1 and 907.9.2~~

~~Bathing and Toilet Facilities – [for DSA-AC Section 1115B~~

~~*Signs and Identification – [for DSA-AC] Section 1117B.5*~~

~~*Detectable Warnings – [for DSA-AC] Sections 1121B.3.1 Item 8(a), 1127B.5.7, 1133B.8.5, Part 12 – Chapter 12-11A and 12-11B*~~

~~*Other Building Components – [for DSA-AC] Section 1117B*~~

~~*1114B.1.2 Accessible route of travel. When a building, or portion of a building, is required to be accessible or adaptable, an accessible route of travel complying with Sections 1102B, 1114B, 1124B, 1133B.3, 1133B.5, 1133B.7 and 1133B.8.6 shall be provided to all portions of the building, to accessible building entrances and between the building and the public way. All walks, halls, corridors, aisles, skywalks, tunnels, and other spaces that are part of an accessible route shall comply with the applicable provisions of this code. Except within an individual dwelling unit, an accessible route of travel shall not pass through kitchens, storage rooms, restrooms, closets or other spaces used for similar purposes. At least one accessible route within the boundary of the site shall be provided from public transportation stops, accessible parking and accessible passenger loading zones and public streets or sidewalks to the accessible building entrance they serve. The accessible route shall, to the maximum extent feasible, coincide with the route for the general public. At least one accessible route shall connect accessible buildings, facilities, elements and spaces that are on the same site. At least one accessible route shall connect accessible building or facility entrances with all accessible spaces and elements and with all accessible dwelling units within the building or facility. An accessible route shall connect at least one accessible entrance of each accessible dwelling unit with those exterior and interior spaces and facilities that serve the accessible dwelling unit.*~~

~~*Where more than one route of travel is provided, all routes shall be accessible. Unless otherwise indicated, the minimum clear width of an accessible route shall not be less than 36 inches (914 mm) except at doors complying with Section 1133B.2 or obstructions complying with Figure 11B-10. If a person in a wheelchair must make a turn around an obstruction the minimum clear width of the accessible route shall be as shown in Figure 11B-5E(a) and (b).*~~

~~*Exception: Where an elevator is provided for vertical access, only one elevator is required. Where more than one elevator is provided, all elevators shall be accessible. See Section 1114B.1.1 for a list of code sections applicable to accessible routes of travel.*~~

~~*1114B.1.3 Primary entry access. All entrances and all exterior ground-level exits shall be accessible in compliance with Section 1133B.1.1.*~~

~~*1114B.1.4 Signs. See Section 1117B.5.*~~

~~*1114B.1.5 Adaptable dwelling units. See Section 1111B.*~~

~~*1114B.2 Egress and areas of refuge.*~~

~~*1114B.2.1 General. In buildings or facilities or portions of buildings or facilities required to be accessible, accessible means of egress shall be provided as required by Chapter 10, Section 1007.*~~

~~*1114B.2.2 Alarms/emergency warning systems/accessibility. If emergency warning systems are provided, they shall include both audible alarms and visible alarms complying with NFPA 72 and Chapter 9, Sections 907.5.2.1 and 907.5.2.3.*~~

~~*SECTION 1115B*~~
~~*BATHING AND TOILET FACILITIES (SANITARY FACILITIES)*~~

~~*1115B.1 General. Bathing and toilet facilities that serve buildings, facilities or portions of buildings or facilities that are required by these standards to be accessible to persons with disabilities, shall be on an accessible route and shall conform to the following requirements.*~~

~~*The accessible fixtures and controls required in this section shall be on an accessible route. An unobstructed*~~

~~turning space complying with Section 1115B.3.1, Item 1, or 1115B.3.2, Item 1, as applicable, shall be provided within an accessible toilet facility. The clear floor spaces at fixtures and controls, the accessible route and the turning space may overlap.~~

~~See Section 1111B.4.6 and Chapter 11A for bathrooms in residential occupancies.~~

~~Exception: In existing buildings or facilities, when the enforcing agency determines that compliance with any building standard under this section would create an unreasonable hardship, an exception to such standard may be granted when equivalent facilitation is provided. When equivalent facilitation is used, the following criteria shall apply:~~

~~1. All sanitary facilities are not required to comply with these building standards when the enforcing agency determines that sanitary facilities are accessible to and usable by persons with disabilities within a reasonable distance of accessible areas.~~

~~2. When existing sanitary facilities are not being altered to provide accessibility, signage complying with Sections 1117B.5.1, Items 2 and 3, and 1117B.5.8.1 shall be provided at such inaccessible facilities indicating the location of the nearest accessible sanitary facility.~~

~~1115B.1.1 Separate and unisex facilities. Where separate facilities are provided for persons of each sex, these facilities shall be accessible to persons with disabilities. Where unisex facilities are provided, these facilities shall be accessible to persons with disabilities.~~

~~1115B.1.2 Where used by children. Where facilities are to be used solely by small children, the specific heights and clearances may be adjusted to meet their accessibility needs. See Table 1115B-1 for suggested mounting heights and clearances.~~

~~TABLE 1115B-1 SUGGESTED DIMENSIONS FOR CHILDREN'S USE~~

~~The Division of the State Architect–Access Compliance recommends the following dimensions as adequately serving the needs of children in projects under our jurisdiction. These recommendations are based on the federal "Recommendations for Accessibility for Children in Elementary School" and other recognized publications on access for children:~~

~~A = Adult Dimensions (age 12 and over)~~
~~E = Elementary Dimensions~~
~~K = Kindergarten and Preschool Dimensions~~

		~~SUGGESTED~~	
~~DIMENSION~~	~~A (inches)~~	~~E (inches)~~	~~K (inches)~~
~~Toilet centering from wall~~	~~18~~	~~15~~	~~12~~
~~Toilet seat height/Dimensions to top of seat~~	~~17-19~~	~~15~~	~~10-12~~
~~Grab bar height (side)~~	~~33~~	~~27~~	~~20-22~~
~~Toilet paper in front of toilet~~	~~12 max~~	~~6 max~~	~~6 max~~
~~Napkin disposal in front of toilet~~	~~12 max~~	~~12 max~~	~~N/A~~
~~Dispenser or mirror height~~	~~40 max~~	~~36 max~~	~~32 max~~
~~Lavatory/sink top height~~	~~34 max~~	~~29 max~~	~~24 max~~
~~Lavatory/sink knee clearance~~	~~27 min~~	~~24 min~~	~~19 min~~
~~Urinal lip height~~	~~17 max~~	~~15 max~~	~~13 min~~
~~Urinal flush handle height~~	~~44 max~~	~~37 max~~	~~32 max~~
~~Drinking fountain bubbler height~~	~~36 max~~	~~32 max~~	~~30 max~~
~~Drinking fountain knee clearance~~	~~27 min~~	~~24 min~~	~~22 min~~
~~Ramp/stair handrail height~~	~~34-38~~	~~27~~	~~22~~

~~For SI: 1 inch = 25.4 mm.~~

~~1115B.2 Bathing and shower facilities. Where facilities for bathing are provided for the public, clients or employees, including showers or bathtubs, at least one shower or bathtub and support facilities such as~~

~~lockers, and not less than 1 percent of all facilities, shall be accessible.~~

~~1115B.3 Toilet facilities.~~

~~1115B.3.1 Multiple-accommodation toilet facilities. See Figure 11B-1B. Multiple-accommodation toilet facilities shall have the following:~~

1. ~~Wheelchair clearance. A clear space measured from the floor to a height of 27 inches (686 mm) above the floor, within the sanitary facility room, of sufficient size to inscribe a circle with a diameter not less than 60 inches (1524 mm) in size. Other than the door to the accessible water closet compartment, a door, in any position, may encroach into this space by not more than 12 inches (305 mm).~~

2. ~~Clear floor space at fixtures. Doors shall not swing into the clear floor space required for any fixture. Doors may swing into that portion of maneuvering space which does not overlap the fixture's required clear floor space. See Figures 11B-1E (c) and (e).~~

3. ~~Accessible fixtures. Provide a minimum of one accessible water closet in compliance with Section 1115B.4.1. At least 5 percent of lavatories, but not less than one lavatory, shall be accessible in compliance with Section 1115B.4.3.~~

4. ~~Accessible water closet compartment. Accessible water closet compartments shall comply with the following:~~

   ~~4.1. The compartment shall be a minimum of 60 inches (1524 mm) wide.~~

   ~~4.2. If the compartment has a side-opening door, either in-swinging or out-swinging, a minimum 60-inches (1524 mm) wide and 60-inches (1524 mm) deep clear floor maneuvering space shall be provided in front of the water closet.~~

   ~~4.3. If the compartment has an end-opening door (facing the water closet), a minimum 60-inches-wide (1524 mm) and 48-inches-deep (1219 mm) clear floor space shall be provided in front of the water closet. The door shall be located in front of the clear floor space and diagonal to the water closet, with a maximum stile width of 4 inches (102 mm).~~

   ~~4.4. The water closet compartment shall be equipped with a door that has an automatic-closing device, and shall have a clear, unobstructed opening width of 32 inches (813 mm) when located at the end and 34 inches (864 mm) when located at the side with the door positioned at an angle of 90 degrees from its closed position.~~

   ~~4.5. The inside and outside of the compartment door shall be equipped with a loop or U-shaped handle immediately below the latch. The latch shall be flip-over style, sliding or other hardware not requiring the user to grasp or twist. Except for door-opening widths and door swings, a clear, unobstructed access of not less than 44 inches (1118 mm) shall be provided to water closet compartments designed for use by persons with disabilities. Maneuvering space at the compartment door shall comply with Sections 1133B.2.4.2 and 1133B.2.4.3, and in no case shall the space immediately outside of the water closet compartment door be less than 48 inches (1219 mm) as measured perpendicular to the compartment door in its closed position.~~

5. ~~Large toilet rooms. Where six or more compartments are provided within a multiple-accommodation toilet room, in addition to the water closet and compartment required by Items 3 and 4 above, provide at least one ambulatory accessible compartment. The ambulatory accessible compartment shall be 36 inches (914 mm) wide with an outward swinging self-closing door and parallel grab bars complying with Section 1115B.4.1, Item~~

~~3.~~

~~6. Interior surfaces. Toilet room floors shall have a stable, fir, slip resistant surface in compliance with Section 1124B.1.~~

~~1115B.3.2 Single-accommodation toilet facilities. Single-accommodation toilet facilities shall have the following:~~

~~1. Wheelchair clearance. There shall be sufficient space in the toilet room for a wheelchair measuring 30 inches (762 mm) wide by 48 inches (1219 mm) long to enter the room and permit the door to close. There shall be in the room a clear floor space of at least 60 inches (1524 mm) in diameter, or a T-shaped space complying with Figure 11B-12 (a) and (b). No door shall encroach into this space for more than 12 inches (305 mm). See Figure 11B-1A.~~

~~2. Clear floor space at fixtures. Doors shall not swing into the clear floor space required for any fixture. Doors may swing into that portion of maneuvering space which does not overlap the fixture's required clear floor space. See Figure 11B-1E (a).~~

~~3. Accessible water closet. Provide one accessible water closet in compliance with Section 1115B.4.1. A minimum 60 inches (1524 mm) wide and 48 inches (1219 mm) deep maneuvering space shall be provided in front of the water closet.~~

~~4. Accessible route. All doors, fixtures and controls shall be on an accessible route. The minimum clear width of an accessible route shall be 36 inches (914 mm) except at doors (see Section 1133B.2). If a person in a wheelchair must make a turn around an obstruction, the minimum clear width of the accessible route shall be as shown in Figure 11B-5E. See also Figure 11B-1A.~~

~~5. Interior surfaces. Toilet room floors shall have a stable, firm, slip resistant surface in compliance with Section 1124B.1.~~

~~6. Accessible lavatory. Provide one accessible lavatory in compliance with Section 1115B.4.3.~~

~~7. Privacy latch. The entrance door shall contain a privacy latch which complies with Section 1117B.6, Controls and Operating Mechanisms.~~

~~For bathrooms serving residential occupancies, see Section 1111B.4.6 and Chapter 11A.~~
~~Exception: In an existing building, a single-accommodation toilet facility may have the water closet fixture located in an area which provides a clear space of not less than 36 inches (914 mm) wide by 48 inches (1219 mm) long in front of the water closet.~~

~~1115B.4 Accessible fixtures.~~

~~1115B.4.1 Accessible water closets. Water closets required to be accessible shall comply with this subsection:~~

~~1. The centerline of the accessible water closet shall be 16 inches (405 mm) minimum and 18 inches (457 mm) maximum from the side wall or partition.~~

~~Exception: the centerline of accessible water closets located in ambulatory accessible compartments shall be 17 inches (430 mm) minimum and 19 inches (485 mm) maximum from the side wall or partition.~~

~~2. Provide clear floor space and maneuvering space at accessible water closets in compliance with Section 1115B.4.1, Item 2. Refer to Section 1115B.3.1, Items 4.2 and 4.3 for additionally required maneuvering space at multiple-accommodation toilet facilities. Refer to Section 1115B.3.2, Item 3 for additionally required maneuvering space at single-accommodation toilet facilities.~~

~~2.1 Where a water closet is not within a water closet compartment, clear floor space around the water closet shall be 60 inches (1524 mm) minimum measured perpendicular from the side wall closest to the water closet and 56 inches (1422 mm) minimum measured perpendicular from the rear wall. See Figure 11B-1E (a).~~

~~2.2 Where a wall mounted water closet is installed within an accessible water closet compartment, clear floor space around the water closet shall be 60 inches (1524 mm) minimum measured perpendicular from the side wall closest to the water closet and 56 inches (1422 mm) minimum measured perpendicular from the rear wall. Where a floor mounted water closet is installed within an accessible water closet compartment, clear floor space around the water closet shall be 60 inches (1524 mm) minimum measured perpendicular from the side wall and 59 inches (1499 mm) minimum measured perpendicular from the rear wall. See Figures 11B-1E (b), (c), (d) and (e).~~

~~2.3 Where a water closet is installed within an accessible water closet compartment with an in-swinging door, a minimum 60 inches (1524 mm) wide by 36 inches (914 mm) deep maneuvering space shall be provided in front of the clear floor space required in Item 2.2. See Figures 11B-1E (c) and (e).~~

~~3. Grab bars for water closets not located within a compartment shall comply with Section 1115B.7 and shall be provided on the side wall closest to the water closet and on the rear wall. Grab bars for water closets located within an accessible compartment shall comply with Section 1115B.7 and shall be provided on the side wall closest to the water closet and on the rear wall. Grab bars for water closets located within ambulatory accessible compartments shall comply with Section 1115B.7 and shall be provided on both sides of the compartment.~~

~~Grab bars shall not project more than 3 inches (76 mm) into the required clear floor space.~~

~~3.1. Side wall. The side grab bar shall be 42 inches (1067 mm) long minimum, located 12 inches (305 mm) maximum from the rear wall and extend 54 inches (1372 mm) minimum from the rear wall with the front end positioned 24 inches (610 mm) minimum in front of the water closet. The side grab bar shall be securely attached and centered 33 inches (838 mm) above and parallel to the floor.~~

~~3.2. Rear wall. The rear grab bar shall be 36 inches (914 mm) long minimum and extend from the centerline of the water closet 12 inches (305 mm) minimum on one side and 24 inches (610 mm) minimum on the other side. The rear grab bar shall be securely attached and centered 33 inches (838 mm) above and parallel to the floor, except that where a tank-type toilet is used which obstructs placement at 33 inches (838 mm), the grab bar may be as high as 36 inches (914 mm) and the space between the grab bar and the top of the tank shall be 1½ inches (38 mm) minimum.~~

~~4. The height of accessible water closets shall be a minimum of 17 inches (432 mm) and a maximum of 19 inches (483 mm) measured to the top of a maximum 2-inch (51 mm) high toilet seat.~~

~~Exception: A 3-inch (76 mm) high seat shall be permitted only in alterations where the existing fixture is less than 15 inches (381 mm) high.~~

~~5 Controls shall be operable with one hand and shall not require tight grasping, pinching or twisting. Controls for the flush valves shall be mounted on the wide side of toilet areas, no more than 44 inches (1118 mm) above the floor. The force required to activate controls shall be no greater than 5 pounds-force (lbf) (22.2 N).~~

~~6. See the Section 1134A.7 for additional requirements for water closets in publicly funded housing and all nonresidential occupancies.~~

~~7. Automatic spring to lifted position seats are not allowed.~~

~~1115B.4.2 Accessible urinals. Urinals required to be accessible shall comply with this subsection.~~

1. ~~Urinals shall be floor mounted, stall-type or wall hung. Where one or more wall-hung urinals are provided, at least one with an elongated rim projecting a minimum of 14 inches (356 mm) from the wall and a maximum of 17 inches (432 mm) from the wall and a maximum of 17 inches (432 mm) above the floor shall be provided.~~

2. ~~Flush controls shall be operable with one hand and shall not require tight grasping, pinching or twisting of the wrist and shall be mounted no more than 44 inches (1118 mm) above the floor. The force required to activate controls shall be no greater than 5 lbf (22.2 N). Electronic automatic flushing controls are acceptable and preferable.~~

3. ~~Where urinals are provided, at least one shall have a clear floor space 30 inches by 48 inches (762 mm by 1219 mm) in front of the urinal to allow forward approach. This clear space shall comply with Section 1118B.4.~~

~~1115B.4.3 Accessible lavatories. Lavatories required to be accessible shall comply with this subsection. The requirements of this subsection shall apply to lavatory fixtures, vanities and built-in lavatories.~~

1. ~~Faucet controls and operating mechanisms shall be operable with one hand in accordance with this chapter and shall not require tight grasping, pinching or twisting of the wrist. The force required to activate controls shall be no greater than 5 lbf (22.2 N). Lever-operated, push-type and electronically controlled mechanisms (preferable) are examples of acceptable designs. Self-closing valves are allowed if the faucet remains open for at least 10 seconds.~~

2. ~~Lavatories, when located adjacent to a side wall or partition, shall be a minimum of 18 inches (457 mm) to the centerline of the fixture. All lavatories that are designated to be accessible shall be a minimum 17 inches (432 mm) in horizontal depth and mounted with the rim or counter edge no higher than 34 inches (864 mm) above the finished floor and with vertical clearance measured from the bottom of the apron or the outside bottom edge of the lavatory of 29 inches (737 mm) reducing to 27 inches (686 mm) at a point located 8 inches (203 mm) back from the front edge. In addition, a minimum 9-inch-high (230 mm) toe clearance must be provided extending back toward the wall to a distance no more than 6 inches (150 mm) from the back wall. The toe clearance space must be free of equipment or obstructions.~~

3. ~~A clear floor space 30 inches by 48 inches (762 mm by 1219 mm) complying with Section 1118B.4 shall be provided in front of a lavatory to allow forward approach. Such clear floor space shall adjoin or overlap an accessible route and shall extend a maximum of 19 inches (483 mm) into knee and toe space underneath the lavatory. See Figure 11B-1D, Knee Clearance.~~

4. ~~Hot water and drainpipes accessible under lavatories shall be insulated or otherwise covered. There shall be no sharp or abrasive surfaces under lavatories.~~

~~1115B.4.4 Accessible showers. Showers required to be accessible shall comply with this subsection:~~

~~1115B.4.4.1 Size and clearances. Accessible showers shall comply with one of the following:~~

1. ~~Roll-in shower 60 inches (1524 mm) minimum in width between wall surfaces and 30 inches (762 mm) minimum in depth with a full opening width on the long side. Shower compartment size and clear floor space shall comply with Figure 11B-2A.~~

2. ~~Alternate roll-in shower 60 inches (1524 mm) minimum in width between wall surfaces and 36 inches (914 mm) in depth with an entrance opening width of 36 inches (914 mm) minimum. Shower compartment size and clear floor space shall comply with Figure 11B-2B.~~

3. ~~Alternate roll-in shower with optional enclosure 60 inches (1524 mm) minimum in width between wall surfaces and 36 inches (914 mm) minimum in depth as long as the entrance~~

~~opening width is a minimum 36 inches (914 mm). Shower compartment size and clear floor space shall comply with Figure 11B-2C.~~

~~1115B.4.4.2 Thresholds. Thresholds in roll-in type showers shall be ½ inch (12.7 mm) high maximum and shall comply with Section 1124B.2.~~

~~1115B.4.4.3 Orientation. Where, within the same functional area, two or more accessible showers are provided, there shall be at least one shower constructed opposite hand from the other or others (that is, one left-hand controls versus right-hand controls).~~

~~1115B.4.4.4 Water controls. Water controls shall be of a single-lever design, operable with one hand, and shall not require tight grasping, pinching or twisting of the wrist. The force required to activate controls shall be no greater than 5 lbf (22.2N). The centerline of the controls shall be located 39 inches (991 mm) to 41 inches (1041 mm) above the shower floor.~~

1. ~~Controls in a 60-inch (1524 mm) minimum by 30-inch (762 mm) minimum roll-in shower shall be located on the back wall of the compartment adjacent to the seat and the centerline of the controls shall be within a range of no less than 19 inches (457 mm) and no more than 27 inches (610 mm) from the seat wall as shown in Figure 11B-2A.~~

2. ~~Controls in a 60-inch (1524 mm) minimum by 36-inch (914 mm) alternate roll-in shower shall be located on the side wall of the compartment adjacent to the seat and the centerline of the controls shall be within a range of no less than 19 inches (457 mm) and no more than 27 inches (610 mm) from the seat wall as shown in Figure 11B-2B.~~

3. ~~Controls in a 60-inch (1524 mm) minimum by 36-inch (914 mm) minimum alternate roll-in shower with optional enclosure shall be located on the back wall of the compartment adjacent to the seat and the centerline of the controls shall be within a range of no less than 19 inches (457 mm) and no more than 27 inches (610 mm) from the seat wall as shown in Figure 11B-2C.~~

~~1115B.4.4.5 Hand-held sprayer unit. A flexible hand-held sprayer unit with a hose at least 60 inches (1524 mm) long that can be used both as a fixed shower head and as a hand-held shower shall be provided. This unit shall be mounted such that the top of the mounting bracket is at a maximum height of 48 inches (1219 mm) above the shower floor.~~

1. ~~The hand-held sprayer unit in a 60-inch (1524 mm) minimum by 30-inch (762 mm) minimum roll-in shower shall be located on the back wall of the compartment adjacent to the seat and the centerline of the unit shall be no more than 27 inches (610 mm) from the seat wall as shown in Figure 11B-2A.~~

2. ~~The hand-held sprayer unit in a 60-inch (1524 mm) minimum by 36-inch (914 mm) alternate roll-in shower shall be located on the side wall of the compartment adjacent to the seat and the centerline of the unit shall be 18 inches (457 mm) from the seat wall as shown in Figure 11B-2B.~~

3. ~~The hand-held sprayer unit in a 60-inch (1524 mm) minimum by 36-inch (914 mm) minimum alternate roll-in shower with optional enclosure shall be located on the back wall of the compartment adjacent to the seat and the centerline of the unit shall be no more than 27 inches (610 mm) from the seat wall as shown in Figure 11B-2C.~~

~~1115B.4.4.6 Sprayer unit alternative. Except within guest rooms and suites in hotels, motels and similar transient lodging establishments, where accessible shower facilities are provided in areas subject to excessive vandalism, in lieu of providing the fixed flexible hose, two wall-mounted shower heads shall be installed. Each shower head shall be installed so that it can be operated independently of the other and shall have swivel angle adjustments, both vertically and horizontally. One shower head shall be located at a height of 48 inches (1219 mm) above the floor.~~

~~1115B.4.4.7 Floor slope. The maximum slope of the floor shall be one unit vertical in 50 unit's horizontal (2 percent slope) in any direction. Where drains are provided, grate openings shall be a maximum of ¼ inch (6.4 mm) and located flush with the floor surface.~~

~~1115B.4.4.8 Shower accessories. Shower accessories shall include:~~

1. ~~A folding seat mounted 18 inches (457 mm) above the floor, and with a minimum space of 1 inch (25 mm) and maximum space of 1½ inches (38 mm) allowed between the edge of the seat and any wall. When folded, the seat shall not extend more than 6 inches (152 mm) from the mounting wall. The seat dimensions and mounting position shall comply with Figures 11B-2A, 11B-2B, 11B-2C and 11B-2D. The structural strength of seats and their attachments shall comply with 1115B.7.2.~~

2. ~~Grab bars located on walls adjacent to and opposite the seat. Grab bars shall also comply with the diameter, loading and projection requirements of Section 1115B.7. Grab bars shall be mounted between a minimum of 33 inches (838 mm) and a maximum of 36 inches (914 mm) above the shower floor with an L-shaped grab bar mounted on walls opposite and adjacent to the front edge of the seat, but not extended to include that portion of wall over the seat. See Figure 11B-2A or 11B-2B.~~

~~1115B.4.4.9 Soap dish. When a soap dish is provided, it shall be located on the control wall at a maximum height of 40 inches (1016 mm) above the shower floor, and within reach limits from the seat.~~

~~1115B.4.4.10 Enclosures. Enclosures, when provided for shower compartments, shall not obstruct controls or obstruct transfer from wheelchairs onto shower seats.~~
~~See Figures 11B-2A, 11B-2B, 11B-2C and 11B-2D.~~

~~1115B.4.5 Accessible bathtubs. Bathtubs required to be accessible shall comply with this subsection.~~

1. ~~Floor space. Clear floor space at bathtubs shall be as shown in Figure 11B-8.~~

2. ~~Seat. An in-tub seat or a seat at the head end of the tub shall be provided as shown in Figures 11B-8 and 11B-9. The structural strength of seats and their attachments shall comply with Section 1115B.7.2. Seats shall be mounted securely and shall not slip during use.~~

3. ~~Grab bars. Grab bars complying with Section 1115B.7 shall be provided as shown in Figure 11B-9.~~

4. ~~Controls. Faucets and other controls shall be located as shown in Figure 11B-9. They shall be operable with one hand and shall not require tight grasping, pinching or twisting of the wrist. The force required to activate controls shall be no greater than 5 lbf (22.2 N).~~

5. ~~Shower unit. A shower spray unit with a hose at least 60 inches (1524 mm) long that can be used both as a fixed shower head and as a hand-held shower shall be provided.~~

6. ~~Bathtub enclosures. If provided, enclosures for bathtubs shall not obstruct controls or transfer from wheelchairs onto bathtub seats or into tubs. Enclosures on bathtubs shall not have tracks mounted on their rims.~~

~~1115B.5 Passageways. Passageways leading to sanitary facilities shall have a clear access. All doorways leading to such sanitary facilities shall comply with Section 1133B.2, Doors. Doors shall not swing into the clear floor space required for any fixture. Accessible fixtures and controls shall be on an accessible route.~~

~~1115B.6 Identification symbols. Doorways leading to sanitary facilities shall be identified by a geometric symbol in compliance with this section. Geometric symbols shall be centered horizontally on the door at a height of 60 inches (1524 mm) above the finish floor or ground surface measured to the center of the symbol. Edges of signs shall be rounded, chamfered or eased. Corners of signs shall have a minimum radius of ⅛ inch~~

~~(3.2 mm). See Section 1117B.5.1, Item 1 for additional signage requirements applicable to sanitary facilities.~~

~~1115B.6.1 Men's sanitary facilities shall be identified by an equilateral triangle, ¼ inch (6.4 mm) thick with edges 12 inches (305 mm) long and a vertex pointing upward. The triangle symbol shall contrast with the door, either light on a dark background or dark on a light background.~~

~~1115B.6.2 Women's sanitary facilities shall be identified by a circle, ¼ inch (6.4 mm) thick and 12 inches (305 mm) in diameter. The circle symbol shall contrast with the door, either light on a dark background or dark on a light background.~~

~~1115B.6.3 Unisex sanitary facilities shall be identified by a circle, ¼ inch (6.4 mm) thick and 12 inches (305 mm) in diameter with a ¼ inch (6.4 mm) thick triangle superimposed on the circle and within the 12-inch (305 mm) diameter. The triangle symbol shall contrast with the circle symbol, either light on a dark background or dark on a light background. The circle symbol shall contrast with the door, either light on a dark background or dark on a light background.~~

~~1115B.7 Grab bars, tub and shower seats. All grab bars, tub and shower seats shall comply with this section.~~

~~1115B.7.1 Diameter or width. The diameter or width of the gripping surfaces of a grab bar shall be 1¼ inches to 1½ inches (32 mm to 38 mm) or the shape shall provide an equivalent gripping surface. If grab bars are mounted adjacent to a wall, the space between the wall and the grab bars shall be 1½ inches (38 mm). See Figure 11B-1C.~~

~~1115B.7.2 Structural strength. The structural strength of grab bars, tub and shower seats, fasteners and mounting devices shall meet the following specifications:~~

1. ~~Bending stress in a grab bar or seat induced by the maximum bending moment from the application of a 250-pound (1112 N) point load shall be less than the allowable stress for the material of the grab bar or seat.~~

2. ~~Shear stress induced in a grab bar or seat by the application of a 250-pound (1112 N) point load shall be less than the allowable shear stress for the material of the grab bar or seat, and its mounting bracket or other support is considered to be fully restrained, then direct and torsional shear stresses shall not exceed the allowable shear stress.~~

3. ~~Shear force induced in fastener or mounting device from the application of a 250-pound (1112 N) point load shall be less than the allowable lateral load of either the fastener or mounting device or the supporting structure, whichever is the smaller allowable load.~~

4. ~~Tensile force induced in a fastener by a direct tension force of a 250-pound (1112 N) point load, plus the maximum moment from the application of a 250-pound (1112 N) point load, shall be less than the allowable withdrawal load between the fastener and supporting structure.~~

5. ~~Grab bars shall not rotate within their fittings.~~

~~1115B.7.3 Surface. A grab bar and any wall or other surface adjacent to it shall be free of any sharp or abrasive elements. Edges shall have a minimum radius of ⅛ inch (3.2 mm).~~

~~1115B.7.4 Unobstructed use. Adjacent elements, for example water closet flush valves, shall be positioned to provide unobstructed use of grab bars at the specified locations. The space between the grab bar and projecting objects below and at the ends shall be 1 1/2 inches (38 mm) minimum. The space between the grab bar and projecting objects above shall be 12 inches (305 mm) minimum.~~

~~Exception: The space between the grab bars and shower controls, shower fittings, and other grab bars above shall be permitted to be 1 ½ inches (38 mm) minimum.~~

~~1115B.8 Accessories.~~

~~*1115B.8.1 Mirrors.*~~

~~*1115B.8.1.1 All mirrors located above accessible lavatories or countertops shall be installed with the bottom edge of the reflecting surface 40 inches (1016 mm) maximum above the finish floor or ground.*~~

~~*1115B.8.1.2 When mirrors are provided at locations other than above lavatories or countertops, at least one shall be installed with the bottom edge of the reflecting surface 35 inches (890 mm) maximum above the finish floor or ground.*~~

~~*1115B.8.1.3 Mirrors in fitting and dressing areas shall comply with Section 1117B.8.*~~

~~*1115B.8.2 Medicine cabinets. If medicine cabinets are provided, at least one shall be located with a usable shelf no higher than 44 inches (1118 mm) above the floor. A clear floor space 30 inches by 48 inches (762 mm by 1219 mm) complying with Section 1118B.4 shall be provided in front of a medicine cabinet to allow a forward or parallel approach.*~~

~~*1115B.8.3 Towel, sanitary napkins, waste receptacles, dispensers and controls. Where towel, sanitary napkins, waste receptacles, dispensers, other equipment and controls are provided, at least one of each type shall be located on an accessible route, with all operable parts, including coin slots, within 40 inches (1016 mm) from the finished floor and shall comply with Section 1117B.6, Controls and Operating Mechanisms.*~~

~~*1115B.8.4 Toilet tissue dispensers. Toilet tissue dispensers shall be located on the wall or partition closest to the water closet 7 inches (180 mm) minimum and 9 inches (230 mm) maximum in front of the water closet measured to the centerline of the dispenser, mounted below the grab bar, with the outlet of the dispenser at a minimum height of 19 inches (485 mm). Dispensers that control delivery or that do not permit continuous paper flow shall not be used. See Figure 11B-1A.*~~

~~*1115B.8.5 Lockers. Where lockers are provided for the public, clients, employees, members or participants, at least one locker and not less than 1 percent of all lockers shall be made accessible to persons with disabilities. A path of travel not less than 36 inches (914 mm) in clear width shall be provided to these lockers.*~~

~~*SECTION 1116B*~~
~~*ELEVATORS AND PLATFORM (WHEELCHAIR) LIFTS*~~

~~*1116B.1 Elevators. Passenger elevators shall be accessible. Elevators required to be accessible shall be designed and constructed to comply with this section and with the ASME A17.1, Safety Code for Elevators and Escalators. Freight elevators shall not be considered as meeting the requirements of this section unless the only elevators provided are used as combination passenger and freight elevators for the public and employees.*~~

~~*1116B.1.1 General. Size of cab and control locations and requirements for accommodation of persons with disabilities.*~~

~~*In buildings two or more stories in height, served by an elevator, or a building served by an elevator required by Chapter 11B, or a building served by an elevator required for accessibility by Section 1.9.1, if more than one passenger elevator is provided, each full passenger elevator shall comply with this chapter.*~~

~~*Exceptions:*~~

1. ~~*In existing buildings, when the enforcing agency determines that compliance with any regulation under this section would create an unreasonable hardship, an exception to such regulation shall be granted when equivalent facilitation is provided.*~~

2. ~~*In existing buildings, where existing shaft configuration or technical infeasibility prohibits strict compliance with Section 1116B.1.8, the minimum car plan dimensions may be reduced by the minimum amount necessary, but in no case shall the inside car area be smaller than 48 inches (1219 mm) by 48 inches (1219 mm).*~~

~~3. In existing buildings, equivalent facilitation may be provided with an elevator car of different dimensions where it can be demonstrated that a person using a wheelchair can enter and operate the elevator and when all other elements required to be accessible comply with the applicable provisions of Section 1116B.~~

~~4. These provisions shall not apply to existing buildings when legal or physical constraints will not allow compliance with these regulations or equivalent facilitation without creating an unreasonable hardship. See Section 109.1 1.9.1.~~

~~1116B.1.2 Operation and leveling. The elevator shall be automatic and provided with a self-leveling feature that will automatically bring the car to the floor landings within a tolerance of plus or minus ½ inch (12.7 mm) under normal loading and unloading conditions. This self-leveling shall, within its zone, be entirely automatic and independent of the operating device and shall correct the overtravel or undertravel. The car shall also be maintained approximately level with the landing, irrespective of load.~~

~~The clearance between the car platform sill and the edge of the hoistway landing shall be no greater than 1¼ inches (32 mm).~~

~~1116B.1.3 Door operation. Power-operated horizontally sliding car and hoistway doors opened and closed by automatic means shall be provided.~~

~~1116B.1.4 Door size. Minimum clear width for elevator doors shall be 36 inches (914 mm).~~

~~1116B.1.5 Door protective and reopening device. Doors closed by automatic means shall be provided with a door-reopening device that will function to stop and reopen a car door and adjacent hoistway door in case the car door is obstructed while closing.~~

~~This reopening device shall also be capable of sensing an object or person in the path of a closing door without requiring contact for activation at a nominal 5 inches and 29 inches (127 mm and 737 mm) above the floor.~~

~~Door-reopening devices shall remain effective for a period of not less than 20 seconds.~~

~~After such an interval, the doors may close in accordance with the requirements of ASME A17.1.~~

~~1116B.1.6 Hall call. The minimum acceptable time from notification that a car is answering a call (lantern and audible signal) until the doors of the car start to close shall be calculated by the following equation:~~

$$T = D / (1.5 \text{ ft/s}) \text{ or } T = D / (455 \text{ mm/s})$$

~~Where T is the total time in seconds and D is the distance from a point in the lobby or landing area 60 inches (1524 mm) directly in front of the farthest call button controlling that car to the centerline of its hoistway door (see Figure 11B-40D). For cars with in-car lanterns, T begins when the lantern is visible from the vicinity of hall call buttons and an audible signal is sounded. The minimum acceptable notification time shall be 5 seconds.~~

~~1116B.1.7 Car call. The minimum acceptable time for doors to remain fully open shall not be less than 5 seconds.~~

~~1116B.1.8 Car inside. The car inside shall allow for the turning of a wheelchair. The minimum clear distance between walls or between wall and door, excluding return panels, shall not be less than 80 inches by 54 inches (2032 mm by 1372 mm) for center opening doors, and 68 inches by 54 inches (1727 mm by 1372 mm) for side-slide opening doors. See Figure 11B-40A. Minimum distance from wall to return panel shall not be less than 51 inches (1295 mm). Elevator floor surfaces shall comply with Section 1124B — Ground and Floor Surfaces.~~

~~The centerline of car control buttons with floor designations shall be located within one of the reach~~

~~ranges specified in Section 1118B.5 and 1118B.6. Emergency controls, including the emergency stop and alarm, shall be grouped in or adjacent to the bottom of the panel and shall be no lower than 2 feet 11 inches (889 mm) from the floor.~~

~~For multiple controls only, one set must comply with these height requirements. Floor buttons shall be provided with visual indicators to show when each call is registered. The visual indicators shall be extinguished when each call is answered.~~

~~Emergency two-way communication systems between the elevator and a point outside the hoistway shall comply with ASME A17.1. The emergency telephone handset shall be positioned no higher than 4 feet (1219 mm) above the floor, and the handset cord shall be a minimum of 2 feet 5 inches (737 mm) in length. It shall be identified by a raised telephone symbol and corresponding Braille lettering complying with Section 1117B.5.1, Item 1, and located adjacent to the device. If the telephone system is located in a closed compartment, the compartment door hardware shall comply with Section 1117B.6 Item 4. Emergency intercommunication shall not require voice communication.~~

~~Controls shall be located on a front wall if cars have center opening doors, and at the side wall or at the front wall next to the door if cars have side opening doors. See Figure 11B-40A.~~

~~Exceptions:~~

1. ~~Where the elevator panel serves more than 16 openings and a parallel approach is provided, buttons with floor designations shall be permitted to be 54 inches (1372 mm) maximum above the finish floor.~~

2. ~~In existing elevators, car control buttons with floor designations shall be permitted to be located 54 inches (1372 mm) above the finish floor where a parallel approach is provided.~~

~~1116B.1.9 Car controls. Identification for the visually impaired shall be as follows:~~

~~Passenger elevator car controls shall have a minimum dimension of ¾ inch (19.1 mm) and shall be raised ⅛ inch (3.2 mm) plus or minus $^{1}/_{32}$ inch (0.8 mm) above the surrounding surface.~~

~~Control buttons shall be illuminated, shall have square shoulders and shall be activated by a mechanical motion that is detectable.~~

~~All control buttons shall be designated by ⅝ inch (15.9 mm) minimum raised characters and standard raised symbols that conform to Sections 1117B.5.2, 1117B.5.3, 1117B.5.5 and 1117B.5.7 immediately to the left of the control button. Contracted (Grade 2) Braille that conforms to Section 1117B.5.6 shall be located immediately below the character or symbol. A minimum clear space of ⅜ inch (9.5 mm) or other suitable means of separation shall be provided between rows of control buttons. See Figure 11B-40B.~~

~~The raised characters and symbols shall be white on a black background.~~

~~Controls and emergency equipment identified by raised symbols shall include, but not be limited to, "door open," "door close," "alarm bell," "emergency stop" and "telephone." The call button for the main entry floor shall be designated by a raised star at the left of the floor designation.~~

~~In elevator cars, a visual car position indicator shall be provided above the car control panel or over the door to show the position of the elevator in the hoistway. As the car passes or stops at a floor served by the elevators, the corresponding numerals shall illuminate, and an audible signal shall sound. Numerals shall be a minimum of ½ inch (13 mm) high. The audible signal shall be no less than 20 decibels with a frequency no higher than 1,500 Hz. An automatic verbal announcement of the floor number at which a car stops or which a car passes may be substituted for the audible signal.~~

~~1116B.1.10 Hall call buttons. The centerline of the hall call buttons shall be 42 inches (1067 mm) above the floor. Buttons shall be a minimum of ¾ inch (19.1 mm) in size and shall be raised ⅛ inch (3.2 mm)~~

~~[plus or minus $^{1}/_{32}$ inch (0.8 mm)] above the surrounding surface. The button designating the up direction shall be on top. Visual indication shall be provided to show each call registered and extinguished when answered. Objects adjacent to, and below, hall call buttons shall not project more than 4 inches (102 mm) from the wall. Hall call buttons shall be internally illuminated with a white light over the entire surface of the button.~~

~~1116B.1.11 Handrails. A handrail shall be provided on one wall of the car, preferably the rear. The rails shall be smooth, and the inside surface at least 1½ inches (38 mm) clear of the walls at a nominal height of 32 inches (813 mm) from the floor. Nominal equals ± 1 inch (25 mm). Thirty-two inches (813 mm) is required to reduce interference with car controls where the lowest button is centered at 35 inches (889 mm) above floor.~~

~~1116B.1.12 Minimum illumination. The minimum illumination at the car controls threshold and the landing when the car and landing doors are open shall not be less than 5 foot-candles (54 lux).~~

~~1116B.1.13 Hall lantern. A visual and audible signal shall be provided at each hoistway entrance indicating to the prospective passenger the car answering the call and its direction of travel as follows:~~

~~The visual signal for each direction shall be a minimum of 2½ inches (64 mm) high by 2½ inches (64 mm) wide and visible from the proximity of the hall call button.~~

~~The audible signal shall sound once for the "up" direction and twice for the "down" direction or shall have verbal annunciators that say "up" or "down."~~

~~The centerline of the fixture shall be located a minimum of 6 feet (1829 mm) in height from the lobby floor.~~

~~The use of in-car lanterns, located in or on the car doorjambs, visible from the proximity of the hall call buttons and conforming to the above requirements, shall be acceptable.~~

~~The use of arrow shapes is preferred for visible signals.~~

~~1116B.1.14 Doorjamb marking. Passenger elevator landing jambs on all elevator floors shall have the number of the floor on which the jamb is located designated by raised characters that are a minimum of 2 inches (51 mm) in height and conform to Section 1117B.5.5 located 60 inches (1524 mm) on center above the floor on the jamb panels on both sides of the door so that they are visible from within the elevator. On the main entry level, a raised five-pointed star shall be placed to the left of the raised character. The outside diameter of the star shall be 2 inches (51 mm)) and all points shall be of equal length. Raised characters, including the star, shall be white on a black background. Contracted (Grade 2) Braille complying with Section 1117B.5.6. Braille complying with Section 1117B.5.6 shall be placed below the corresponding raised characters and the star. The Braille translation for the star shall be "MAIN".~~

~~The raised characters shall otherwise comply with Sections 1117B.5.2 and 1117B.5.3. See Figure 11B-40C. Permanently applied plates are acceptable if they are permanently fixed to the jambs.~~

~~1116B.1.15 Location. Passenger elevators shall be on an accessible route, located near a major path of travel, and provisions shall be made to ensure that they remain accessible and usable at all times the building is occupied.~~

~~1116B.2 Platform (wheelchair) lifts. Platform (wheelchair) lifts shall comply with this section.~~
~~Platform (wheelchair) lifts may be provided as part of an accessible route only for the following conditions:~~

1. ~~To provide an accessible route to a performing area in an assembly occupancy, or to a speaking area or similar place (such as a dais or "head table") in an assembly or Group B Occupancy.~~

2. ~~To comply with the wheelchair viewing position line-of-sight and dispersion requirements of Section 1104B.3.5.~~

3. ~~To provide access to incidental occupiable spaces and rooms which are not open to the general~~

~~*public and which house no more than five persons, including, but not limited to, equipment control rooms and projection booths.*~~

~~*4. To provide access where existing site constraints or other constraints make use of a ramp or an elevator infeasible.*~~

~~*Exception: In existing buildings, the installation of platform (wheelchair) lifts as part of an accessible path of travel for additions or alterations is not limited to the four conditions listed in this section.*~~

~~*1116B.2.1 General. When platform (wheelchair) lifts are provided, the vertical distance between landings, as well as the structural design and safeguards, shall be as allowed by ASME A18.1 Safety Standard for Platform Lifts and Stairway Chair Lifts; the Department of Industrial Relations, Division of Occupational Safety and Health; and any applicable safety regulations of other administrative authorities having jurisdiction.*~~

~~*1116B.2.2 Unassisted entry. Platform (wheelchair) lifts shall be designed and constructed to facilitate unassisted entry, operation and exit from the lift and shall comply with the restrictions and enhancements of this section in conjunction with Title 8, of the California Code of Regulations.*~~

~~*1116B.2.3 Landing size. In new construction, the minimum size of landings at platform lifts shall be 60 inches by 60 inches (1524 mm by 1524 mm). Other dimensions may be substituted where it can be demonstrated that a person using a wheelchair measuring 30 inches by 48 inches (762 mm by 1219 mm) can enter and operate the lift safely.*~~

~~*1116B.2.4 Relationship to the path of travel. Level and clear floor areas or landings at platform lifts shall be part of "path of travel" requirements.*~~

~~*Exceptions:*~~

~~*1. The provisions of this section shall not apply to existing buildings when physical constraints will not allow compliance with these regulations or equivalent facilitation without creating an unreasonable hardship. See Section 1.9.1.*~~

~~*2. When the enforcing agency determines that compliance with any regulation under this section would create an unreasonable hardship, an exception to such regulation shall be granted when equivalent facilitation is provided.*~~

~~*1116B.2.5 When provided as a means of egress. Platform (wheelchair) lifts, when provided as a component in an accessible means of egress, shall conform to the requirements of Section 1116B.2.5.*~~

~~*1116B.2.5.1 Standby power. To ensure continued operation in case of primary power loss, platform (wheelchair) lifts shall be provided with standby power or with self-rechargeable battery power that provides sufficient power to operate all platform lift functions for a minimum of five upward and downward trips.*~~

~~*1116B.2.5.2 Platform (wheelchair) lifts, when provided per Section 1116B.1 Item 2 are permitted to be a component of an accessible means of egress when the area served by the platform (wheelchair) lift does not serve more than four wheelchair viewing positions and where any one of the following conditions exist:*~~

~~*1. The building has a supervised automatic sprinkler system.*~~

~~*2. The maximum distance from the point where the wheelchair occupant is seated to a point where the occupant has a choice of two directions of travel to an exit shall not exceed 30 feet (9144 mm). The length of the path of travel shall include the vertical travel distance of the lift.*~~

~~*1116B.2.6 Doors and gates. Lifts shall have low energy power-operated doors or gates. Doors and gates shall remain open for 20 seconds minimum. End doors shall be 32 inches (813 mm) minimum clear width. Side doors shall be 42 inches (1067 mm) minimum clear width.*~~

~~*Exception: Lifts having doors or gates on opposite sides shall be permitted to have manual doors or gates.*~~

~~*1116B.2.7 Restriction sign. A sign complying with Section 1117B.5.1, Items 2 and 3 shall be securely fastened in a conspicuous place at each landing and on the platform. The sign shall state "No Freight" in letters not less than 5/8 inch (16 mm) high and include the International Symbol of Accessibility.*~~

~~*SECTION 1117B*~~
~~*OTHER BUILDING COMPONENTS*~~

~~*1117B.1 Accessible drinking fountains. Where drinking fountains are provided, they shall comply with this section:*~~

1. ~~*General. Where only one drinking fountain area is provided on a floor, there shall be a drinking fountain that is accessible to individuals who use wheelchairs in accordance with this section and one accessible to those who have difficulty bending or stooping. This can be accommodated by the use of "hi-low" fountains, or by such other means as would achieve the required accessibility for each group on each floor.*~~

   ~~*Where more than one drinking fountain is provided on a floor, 50 percent of those provided shall comply with Items 1, 2, 4 and 5 of this section and shall be on an accessible route complying with 1114B.1.2. All drinking fountains shall comply with Item 3 of this section.*~~

2. ~~*Clearances. Wall- and post-mounted cantilevered drinking fountains shall be a minimum of 18 inches (457 mm) and a maximum of 19 inches (483 mm) in depth and shall have a clear knee space between the bottom of the apron and the floor or ground not less than 27 inches (686 mm) in height, 30 inches (762 mm) in width, and 8 inches (203 mm) in depth, the depth measurements being taken from the front edge of the fountain back toward the wall or mounting post. The knee clearance space must be free of equipment or obstructions. Additionally, there shall be toe clearance of 9 inches (229 mm) in height above the floor and 17 inches (432 mm) in depth from the front edge of the fountain. The toe clearance space must be free of equipment or obstructions. A clear floor space at least 30 inches (762 mm) by 48 inches (1219 mm) complying with Section 1118B.4 shall be provided in front of the drinking fountain to allow forward approach. At "hi-low" type fountains, center the 30 inch (762 mm) by 48 inch (1219 mm) clear floor space on the "low" fountain fixture. A side approach drinking fountain is not acceptable.*~~

3. ~~*Alcoves. All drinking fountains shall be located completely within alcoves, positioned completely between wing walls, or otherwise positioned so as not to encroach into pedestrian ways. The alcove in which a drinking fountain is located shall not be less than 32 inches (813 mm) in width and 18 inches (457 mm) in depth. Wing walls shall project out from the supporting wall at least as far as the drinking fountain to within 6 inches (152 mm) of the surface of the path of travel. There shall also be a minimum of 32 inches (813 mm) clear between wing walls. See Figure 11B-3A of this code. Additionally, alcoves and space between wing walls shall comply with Section 1118B.4, Item 2. Protruding objects located in alcoves , located between wing walls or otherwise positioned so as to limit encroachment into pedestrian ways are permitted to project 4 inches (102 mm) into walks, halls, corridors, passageways or aisles.*~~

4. ~~*Operable parts, spout height and location. The bubbler shall be activated by a manually operated system complying with Section 1117B.6, Item 4 that is front mounted or side mounted and located within 6 inches (152 mm) of the front edge of the fountain or an electronically controlled device. Spout outlets shall be 36 inches (914 mm) maximum above r the finish floor or ground. The spout shall be located 15 inches (381 mm) minimum from the vertical support and 5 inches (127 mm) maximum from the front edge of the unit including bumpers.*~~

5. ~~*Water flow. The spout shall provide a flow of water at least 4 inches (102 mm) high minimum and shall be located 5 inches (127 mm) maximum from the front of the unit. The angle of the water stream shall be measured horizontally relative to the front face of the unit. Where spouts are located less than 3 inches (76 mm) of the front of the unit, the angle of the water stream shall be*~~

~~30 degrees maximum. Where spouts are located between 3 inches (76 mm) and 5 inches (127 mm) maximum from the front of the unit, the angle of the water stream shall be 15 degrees maximum. On an accessible drinking fountain with a round or oval bowl, the spout must be positioned so the flow of water is within 3 inches (75 mm) of the front edge of the fountain.~~

~~1117B.2 Telephones.~~

~~1117B.2.1 General. If public pay telephones, public closed-circuit telephones or other public telephones are provided, they shall comply with this section to the extent required by the following table. See Figure 11B-4.~~

~~Number of each type of telephone provided on each floor~~	~~Minimum number of telephones required to comply with Section 1117B.2[1]~~
~~1 or more single units~~	~~At least 50 percent of telephone units per floor but not less than one.~~
~~1 telephone bank~~	~~At least 50 percent of telephone units per bank but not less than one.~~
~~2 or more banks~~	~~At least 50 percent of telephone units per bank but not less than one.~~ ~~At least 1 telephone per floor shall meet the requirements for a forward reach telephone.~~

~~[1]Additional public telephones may be installed at any height.~~

~~1117B.2.2 Clear floor or ground space. A clear floor or ground space at least 30 inches by 48 inches (762 mm by 1219 mm) that allows either a forward or parallel approach by a person using a wheelchair shall be provided at telephones.~~

~~1117B.2.3 Size and approach. The minimum clear floor or ground space required to accommodate a single, stationary wheelchair and occupant is 30 inches by 48 inches (762 mm by 1219 mm). The minimum clear floor or ground space for wheelchairs may be positioned for forward or parallel approach to an object. Clear floor or ground space for wheelchairs may be part of the knee space required under some objects. See Figure 11B-5A.~~

~~1117B.2.4 Relationship of maneuvering clearances to wheelchair spaces. One full unobstructed side of the clear floor or ground space for a wheelchair shall adjoin another wheelchair clear floor space. If a clear floor space is located in an alcove or otherwise confined on all or part of three sides, additional maneuvering clearances shall be provided. See Figure 11B-5A.~~

~~1117B.2.5 Floor surfaces of wheelchair spaces. Floor surfaces of wheelchair spaces shall conform to Section 1124B. Bases, enclosures and fixed seats shall not impede approaches to telephones by people who use wheelchairs.~~

~~1117B.2.6 Mounting height. The highest operable part of the telephone shall be within the reach ranges specified in Sections 1118B.5 and 1118B.6. Telephones mounted diagonally in a corner that require wheelchair users to reach diagonally shall have the highest operable part no higher than 54 inches (1372 mm) above the floor. See Figure 11B-4.~~

~~1117B.2.7 Enclosures. If telephone enclosures are provided, they may overhang the clear floor space required in Sections 1117B.2.2, 1117B.2.3 and 1117B.2.4 within the following limits:~~

1. ~~Side reach possible. Where a parallel approach is provided at a telephone within an enclosure, the enclosure and counter may extend beyond the face of the telephone a maximum of 10 inches (254 mm). The enclosure and counter may not overlap the required clear floor or ground space. See Figure 11B-4.~~

~~2. Full-height enclosures. Entrances to full-height enclosures shall be 30 inches (762 mm) minimum. See Figure 11B-4.~~

~~3. Forward reach required. Where a front approach is provided at a telephone within an enclosure, the counter may extend beyond the face of the telephone a maximum of 20 inches (508 mm) into the required clear floor or ground space and the enclosure may extend beyond the face of the telephone a maximum of 24 inches (610 mm). If an additional 6 inches (152 mm) in width of clear floor space is provided, creating a clear floor space of 36 inches by 48 inches (914 mm by 1219 mm), the enclosure may extend more than 24 inches (610 mm) beyond the face of the telephone. See Figure 11B-4.~~

~~4. Protruding telephone enclosures. Where telephone enclosures protrude into walks, halls, corridors or aisles, they shall also comply with Section 1133B.8.6.~~

~~1117B.2.8 Telephone equipment for hearing impaired persons. Telephones shall be equipped with a receiver that generates a magnetic field in the area of the receiver cap. All telephones required to be accessible shall be equipped with a volume control. In addition, 25 percent, but never less than one, of all other public telephones provided shall be equipped with a volume control and shall be dispersed among all types of public telephones, including closed-circuit telephones, throughout the building or facility. If banks of public telephones are provided, at least one in each bank shall be equipped with a volume control. Such telephones shall be capable of a minimum of 12 dBA and a maximum of 18 dBA above normal. If an automatic reset is provided, 18 dBA may be exceeded. Public telephones with volume control shall be hearing aid compatible and shall be identified by a sign containing a depiction of a telephone handset with radiating sound waves.~~

~~1117B.2.9 Text telephones.~~

~~1117B.2.9.1 Where required.~~

~~1. If a total of four or more public pay telephones (including both interior and exterior phones) are provided at a site, and if at least one of the total is in an interior location, then at least one interior public text telephone shall be provided.~~

~~2. If an interior public pay telephone is provided in a stadium or arena, in a convention center, in a hotel with a convention center or in a covered mall, at least one interior public text telephone shall be provided in the facility.~~

~~3. If a public pay telephone is located in or adjacent to a hospital emergency room, hospital recovery room or hospital waiting room, one public text telephone shall be provided at each location.~~

~~4. If alterations to existing buildings or facilities with less than four exterior or interior public pay telephones would increase the total number to four or more telephones with at least one in an interior location then a text telephone shall be provided.~~

~~5. If alterations to one or more exterior or interior public pay telephones occur in an existing building or facility with four or more public telephones with at least one in an interior location then a text telephone shall be provided.~~

~~1117B.2.9.2 General. Text telephones shall comply with the following requirements:~~

~~1. Text telephones used with a pay telephone shall be permanently affixed within or adjacent to the telephone enclosure. If an acoustic coupler is used, the telephone cord shall be sufficiently long to allow connection of the text telephone and the telephone receiver.~~

~~2. Where a bank of telephones in the interior of a building consists of three or more public pay telephones, at least one public pay telephone in each such bank shall be equipped with a shelf and an electrical outlet within or adjacent to the telephone enclosure. The telephone handset shall be capable of being placed flush on the surface of the shelf. The shelf shall be~~

~~capable of accommodating a text telephone and shall have 6 inches (152 mm) minimum vertical clearance in the area where the text telephone is to be placed.~~

3. ~~Equivalent facilitation may be substituted for the requirements of this section. For example, a portable text telephone may be made available in a hotel at a registration desk if it is available on a 24-hour basis for use with nearby public pay phones. In this instance, at least one pay phone shall comply with Item 2 above. In addition, if an acoustic coupler is used, the telephone handset cord shall be sufficiently long to allow connection of the text telephone and the telephone receiver. Directional signage shall comply with Section 1117B.5.1 Items 2 and 3.~~

~~1117B.2.9.3 Signage. Text telephones shall be identified by the international TTY symbol (see Figure 11B-14A). If a facility has a public text telephone, directional signage indicating the location of the nearest such telephone shall be placed adjacent to all banks of telephones that do not contain a text telephone. Such directional signage shall include the international TTY symbol. If a facility has no banks of telephones, the directional signage shall be provided at the entrance or in a building directory.~~

~~1117B.2.10 Controls. Telephones shall have push-button controls where service for such equipment is available.~~

~~1117B.2.11 Cord length. The cord from the telephone to the handset shall be at least 29 inches (737 mm) long.~~

~~1117B.2.12 Telephone books. If telephone books are provided, they shall be located in a position that complies with the reach ranges in Sections 1118B.5 and 1118B.6.~~

~~1117B.3 Kitchens. See Section 1133A.~~

~~1117B.4 Swimming pools. See Section 1104B.4.3.~~

~~1117B.5 Signs and Identification. California's standards for signage are more stringent than Section 4.30 of the ADA Standards for Accessible Design.~~

~~1117B.5.1 General. When new or additional signs and/or identification devices are provided, or when existing signs and/or identification devices are replaced or altered, the new or altered signs and/or identification devices shall comply with Section 1117B.5. The addition of or replacement of signs and/or identification devices shall not trigger any additional path of travel requirements.~~

1. ~~Identification signs. When signs identify permanent rooms and spaces of a building or site, they shall comply with Sections 1117B.5.2, 1117B.5.3, 1117B.5.5, 1117B.5.6 and 1117B.5.7. For other means of egress signs and identification provisions adopted by SFM and DSA-AC, see Chapter 10, Sections 1011.3 for Tactile Exit Signs, 1022.8 for Floor Identification Signs, 1008.1.9.7 for Delayed Egress Locks, 1007.9, 1007.10 and 1007.11 for Accessible Means of Egress, and 1007.4 for Elevators. See also Section 1116B for additional signage requirements applicable to elevators and Section 1115B.6 for sanitary facilities.~~

2. ~~Directional and informational signs. When signs direct to or give information about permanent rooms and functional spaces of a building or site, they shall comply with Sections 1117B.5.2, 1117B.5.3 and 1117B.5.4.~~

3. ~~Accessibility signs. When signs identify, direct to or give information about accessible elements and features of a building or site, they shall include the appropriate symbol of accessibility and shall comply with Sections 1117B.5.2 and 1117B.5.8.~~
4. ~~Plan review and inspection. Signs and identification as specified in Section 1117B.5.1, when included in the construction of new buildings or facilities, or when included, altered or replaced due to additions, alterations or renovations to existing buildings or facilities, and when a permit is required, shall comply with the following plan review and inspection requirements:~~

~~4.1. Plan review. Plans, specifications or other information indicating compliance with these regulations shall be submitted to the enforcing agency for review and approval.~~

~~4.2. Inspection. Signs and identification shall be field inspected after installation and approved by the enforcing agency prior to the issuance of a final certificate of occupancy per Appendix Chapter 1, Section 110.2, or final approval where no certificate of occupancy is issued. The inspection shall include, but not be limited to, verification that Braille dots and cells are properly spaced and the size, proportion and type of raised characters are in compliance with these regulations.~~

~~4.3. Other signs and identification. Tactile exit signage in Sections 1011.3 and 1011.3.2, tactile floor designation signs in stairways in Section 1022.8, tactile special egress-control device signs in Section 1008.1.9.7, elevator car control identification required in Sections 1116B.1.8 and 1116B.1.9, elevator doorjamb marking required in Section 1116B.1.14, and sanitary facilities signage required in Section 1115B.6 shall also comply with this section.~~

~~1117B.5.2 Finish and contrast. Characters, symbols and their background shall have a nonglare finish. Characters and symbols shall contrast with their background, either light on a dark background or dark on a light background.~~

~~1117B.5.3 Proportions. Visual characters on signs shall be selected from fonts where the width of the uppercase letter "O" is 60 percent minimum and 110 percent maximum of the height of the uppercase letter "I". Stroke thickness of the uppercase letter "I" shall be 10 percent minimum and 20 percent maximum of the height of the character.~~

~~1117B.5.4 Character height. Characters on signs required to be accessible by Section 1117B.5.1, Items 2 and 3 shall be sized according to the following table. The minimum height is measured using an uppercase letter "I". Lowercase characters are permitted. Viewing distance shall be measured as the horizontal distance between the character and an obstruction preventing further approach towards the sign.~~

~~Visual Character Height~~

~~Height to Finish Floor or Ground From Baseline of Character~~	~~Horizontal Viewing Distance~~	~~Minimum Character Height~~
~~40 inches (1015 mm) to less than or equal to 70 inches (1780 mm)~~	~~Less than 72 inches (1830 mm)~~	~~5/8 inch (16 mm)~~
	~~72 inches (1830 mm) and greater~~	~~5/8 inch (16 mm), plus 1/8 inch (3.2 mm) per foot (305 mm) of viewing distance above 72 inches (1830 mm)~~
~~Greater than 70 inches (1780 mm) to less than or equal to 120 inches (3050 mm)~~	~~Less than 180 inches (4570 mm)~~	~~2 inches (51 mm)~~
	~~180 inches (4570 mm) and greater~~	~~2 inches (51 mm), plus 1/8 inch (3.2 mm) per foot (305 mm) of viewing distance above 180 inches (4570 mm)~~
~~Greater than 120 inches (3050 mm)~~	~~Less than 21 feet (6400 mm)~~	~~3 inches (75 mm)~~
	~~21 feet (6400 mm) and greater~~	~~3 inches (75 mm), plus 1/8 inch (3.2 mm) per foot (305 mm) of viewing distance above 21 feet (6400 mm)~~

~~1117B.5.5 Raised characters and pictorial symbol signs. When raised characters are required or when~~

~~pictorial symbols (pictograms) are used on such signs, they shall conform to the following requirements:~~

1. ~~Character type. Characters on signs shall be raised $^{1}/_{32}$ inch (0.794 mm) minimum and shall be sans serif uppercase characters accompanied by contracted (Grade 2) Braille complying with Section 1117B.5.6.~~

2. ~~Character size. Raised characters shall be a minimum of ⅝ inch (15.9 mm) and a maximum of 2 inches (51 mm) high.~~

3. ~~Pictorial symbol signs (pictograms). Pictorial symbol signs (pictograms) shall be accompanied by the verbal description placed directly below the pictogram. The outside dimension of the pictogram field shall be a minimum of 6 inches (152 mm) in height.~~

4. ~~Character placement. Characters and Braille shall be in a horizontal format. Braille shall be placed a minimum of ⅜ inch (9.5 mm) and a maximum of ½ inch (12.7 mm) directly below the tactile characters; flush left or centered. When tactile text is multiline, all Braille shall be placed together below all lines of tactile text.~~

5. ~~Proportions. Raised characters on signs shall be selected from fronts where the width of the uppercase letter "O" is 60 percent minimum and 110 percent maximum of the height of the uppercase letter "I". Stroke thickness of the upper letter "I" shall be 15 percent maximum of the height of the character.~~

~~1117B.5.6 Braille. Contracted (Grade 2) Braille shall be used wherever Braille is required in other portions of these standards. Dots shall be $^{1}/_{10}$ inch (2.54 mm) on center in each cell with $^{2}/_{10}$ inch (5.08 mm) space between cells, measured from the second column of dots in the first cell to the first column of dots in the second cell. Dots shall be raised a minimum of $^{1}/_{40}$ inch (0.635 mm) above the background. Braille dots shall be domed or rounded.~~

~~1117B.5.7 Mounting location and height. Where permanent identification signs are provided for rooms and spaces, signs shall be installed on the wall adjacent to the latch side of the door. Where there is no wall space on the latch side, including at double leaf doors, signs shall be placed on the nearest adjacent wall, preferably on the right.~~

~~Where permanent identification signage is provided for rooms and spaces they shall be located on the approach side of the door as one enters the room or space. Signs that identify exits shall be located on the approach side of the door as one exits the room or space.~~

~~Signs with raised characters and Braille shall be located 48 inches (1220 mm) minimum above the finish floor or ground surface, measured from the baseline of the lowest line of Braille and 60 inches (1525 mm) maximum above the finish floor or ground surface, measured from the baseline of the highest line of raised characters. Mounting location shall be determined so that a person may approach within 3 inches (76 mm) of signage without encountering protruding objects or standing within the swing of a door.~~

~~See also Section 1115B.6 for additional signage requirements applicable to sanitary facilities.~~

~~1117B.5.8 Symbols of accessibility.~~

~~1117B.5.8.1 International Symbol of Accessibility. The International Symbol of Accessibility shall be the standard used to identify facilities that are accessible to and usable by physically disabled persons as set forth in these building standards and as specifically required in this section. See Figure 11B-6.~~

~~Exception: Signs need not be provided for facilities within an adaptable dwelling unit, or within an accessible patient or guest room.~~

~~1117B.5.8.1.1 Color of symbol. The symbol specified above shall consist of a white figure on a blue background. The blue shall be equal to Color No. 15090 in Federal Standard 595B.~~

~~*Exception: The appropriate enforcement agency may approve other colors to complement decor or unique design. The symbol contrast shall be light on dark or dark on light.*~~

~~*1117B.5.8.1.2 Entrance signs. Entrances to buildings and facilities that are accessible to and usable by persons with disabilities shall be identified with a minimum of one International Symbol of Accessibility and with additional directional signs, utilizing the symbol, at junctions where the accessible route of travel diverges from the regular circulation path, to be visible to persons along approaching circulation paths. In existing buildings and facilities, entrances which are not accessible shall have directional signage complying with Section 1117B.5.1, Items 2 and 3, which indicates the location of and route to the nearest accessible entrance.*~~

~~*Exceptions:*~~

1. ~~*An International Symbol of Accessibility is not required at entrances to individual rooms, suites, offices, sales or rental establishments, or other such spaces when all entrances to the building or facility are accessible and persons entering the building or facility have passed through one or more entrances with signage complying with this section.*~~

2. ~~*An International Symbol of Accessibility is not required at entrances to machinery spaces frequented only by service personnel for maintenance, repair, or occasional monitoring of equipment; for example, elevator pits or elevator penthouses; mechanical, electrical or communications equipment rooms; piping or equipment catwalks; electric substations and transformer vaults; and highway and tunnel utility facilities.*~~

~~*1117B.5.8.1.3 Information posted. Buildings that provide specific sanitary facilities and/or elevators for public use that conform to these building standards shall have this information posted in the building lobby, preferably as part of the building directory. The information shall be accompanied by the International Symbol of Accessibility. Inaccessible sanitary facilities shall have directional signage complying with 1117B.5.1, Items 2 and 3, to indicate the location of the nearest accessible sanitary facility.*~~

~~*1117B.5.8.2 International TTY symbol. Where the international TTY symbol is required, it shall comply with Figure 11B-14A.*~~

~~*1117B.5.8.3 Volume control telephones. Where telephones with volume controls are required to be identified, the identification symbol shall be a telephone handset with radiating sound waves, such as shown in Figure 11B-14B.*~~

~~*1117B.5.8.4 Assistive listening systems. Where assistive listening systems are required to be identified by the International Symbol of Access for Hearing Loss, it shall comply with Figure 11B-14C.*~~

~~*1117B.5.9 Traffic-control devices. Pole-supported pedestrian traffic-control buttons shall be identified with color coding consisting of a textured horizontal yellow band 2 inches (51 mm) in width encircling the pole, and a 1-inch-wide (25 mm) dark border band above and below this yellow band. Color coding should be placed immediately above the control button. Control buttons shall be located no higher than 48 inches (1219 mm) above the surface adjacent to the pole.*~~

~~*1117B.5.10 Signs for text telephones. Whenever signs shall refer to text telephones for people who are deaf or hard of hearing, the term "TTY" shall be used; the term "TDD" shall not be used.*~~

~~*1117B.5.11 Cleaner air symbol. Strictly for publicly funded facilities or any facilities leased or rented by state of California, not concessionaires. This symbol shall be the standard used to identify a room, facility and paths of travel that are accessible to and usable by people who are adversely impacted by airborne chemicals or particulate(s) and/or the use of electrical fixtures and/or devices. When used, the symbol shall comply with Figure 11B-40.*~~

~~*1117B.5.11.1 Color and size of symbol. The symbol shall be used when the following minimum conditions are met. The symbol, which shall include the text "Cleaner Air" as shown, shall be displayed either as a negative or positive image within a square that is a minimum of 6 inches on each side. The symbol may be shown in black and white or in color. When color is used, it shall be Federal Blue (Color No. 15090 Federal Standard 595B) on white, or white on Federal Blue. There shall be at least a 70-percent color contrast between the background of the sign from the surface that it is mounted on.*~~

~~*Strictly for publicly funded public facilities or any facilities leased or rented by State of California; not concessionaires.*~~

~~*1117B.5.11.2 Conditions of use. Use of the cleaner air symbol is voluntary. The cleaner air symbol shall be permitted for use to identify a path of travel, and a room or a facility when the following is met.*~~

1. ~~*Floor or wall coverings, floor or wall covering adhesives, carpets, formaldehyde-emitting particleboard cabinetry, cupboards or doors have not been installed or replaced in the previous 12 months.*~~

2. ~~*Incandescent lighting provided in lieu of fluorescent or halogen lighting, and electrical systems and equipment shall be operable by or on behalf of the occupant or user of the room, facility or path of travel.*~~

3. ~~*Heating, ventilation, air conditioning and their controls shall be operable by or on behalf of the occupant or user.*~~

4. ~~*To maintain "cleaner-air" designation only nonirritating, nontoxic products will be used in cleaning, maintenance, disinfection, pest management or for any minimal touch-ups that are essential for occupancy of the area. Deodorizers or Fragrance Emission Devices and Systems (FEDS) shall not be used in the designated area. Pest control practices for cleaner air areas shall include the use of bait stations using boric acid, sticky traps and silicone caulk for sealing cracks and crevices. Areas shall be routinely monitored for pest problems. Additional nontoxic treatment methods, such as temperature extremes for termites, may be employed in the event of more urgent problems. These pest control practices shall not be used 48 hours prior to placement of the sign, and the facility shall be ventilated with outside air for a minimum of 24 hours following use or application.*~~

5. ~~*Signage shall be posted requesting occupants or users not to smoke or wear perfumes, colognes or scented personal care products. Fragranced products shall not be used in the designated cleaner-air room, facility or path of travel.*~~

6. ~~*A log shall be maintained on site, accessible to the public either in person or by telephone, e-mail, fax or other accessible means as requested. One or more individuals shall be designated to maintain the log. The log shall record any product or practice used in the cleaner air designated room, facility or path of travel, as well as scheduled activities, that may impact the cleaner-air designation. The log shall also include the product label as well as the Material Safety Data Sheets (MSDS).*~~

~~*1117B.5.11.3 Removal of symbol. If the path of travel, room and/or facility identified by the cleaner air symbol should temporarily or permanently cease to meet the minimum conditions as set forth above, the cleaner air symbol shall be removed and shall not be replaced until the minimum conditions are again met.*~~

~~*1117B.6 Controls and operating mechanisms.*~~

1. ~~*General. Controls and operating mechanisms in accessible spaces, along accessible routes or as parts of accessible elements (for example, light switches and dispenser controls) and those required to be accessible by Section 109.1 1.9.1 shall comply with the requirements of this section.*~~

~~2. Clear floor space. Clear floor space complying with Section 1118B.4 that allows a forward or parallel approach by a person using a wheelchair shall be provided at controls, dispensers, receptacles and other operable equipment.~~

~~3. Height. The highest operable part of all controls, dispensers, receptacles and other operable equipment shall be placed within at least one of the reach ranges specified in Sections 1118B.5 and 1118B.6.~~

~~Exception: These requirements do not apply where the use of special equipment dictates otherwise or where electrical and communication systems receptacles are not normally intended for use by building occupants.~~

~~4. Operation. Controls and operating mechanisms shall be operable with one hand and shall not require tight grasping, pinching or twisting of the wrist. The force required to activate controls shall be no greater than 5 pounds (22.2 N) of force.~~

~~5. Installation heights of electrical switches and receptacle outlets.~~

~~5.1 Electrical switches. Controls and switches intended to be used by the occupant of the room or area to control lighting and receptacle outlets, appliances or cooling, heating and ventilating equipment, shall be located no more than 48 inches (1219 mm) measured from the top of the outlet box nor less than 15 inches (381 mm) measured from the bottom of the outlet box to the level of the finish floor or working platform.~~

~~5.2 Electrical receptacle outlets. Electrical receptacle outlets on branch circuits of 30 amperes or less and communication system receptacles shall be located no more than 48 inches (1219 mm) measured from the top of the receptacle outlet box or receptacle housing nor less than 15 inches (381 mm) measured from the bottom of the receptacle outlet box or receptacle housing to the level of the finish floor or working platform.~~

~~Exceptions:~~

~~1. Receptacle outlets installed as part of permanently installed baseboard heaters are exempt.~~

~~2. Required receptacle outlets shall be permitted in floors when adjacent to sliding panels or walls.~~

~~3. Baseboard electrical outlets used in reloadable partitions, window walls or other electrical convenience floor outlets are not subject to the minimum height requirements.~~

~~4. This section shall not apply to existing buildings when the enforcing agency determines that compliance with these standards would create an unreasonable hardship.~~

~~1117B.7 Automated teller machines and point of sale machines.~~

~~1117B.7.1 General. Where ATMs, self-service for vending, collection, or adjustment machines and point-of-sale devices are provided for the public they shall comply with Section 1117B.7.~~

~~Exceptions:~~

~~1. Where the enforcing agency determines that compliance with this regulation would create an unreasonable hardship, an exception may be granted when equivalent facilitation is provided through the use of other methods or materials.~~

~~2. In existing buildings, these regulations shall not apply when legal or physical constraints would not allow compliance with these regulations or equivalent facilitation without creating an unreasonable hardship.~~

~~3. Card reading devices located on fuel pump islands at gasoline service stations and motor-vehicle fuel facilities shall comply with the requirements of Chapter 11C.~~

~~1117B.7.1.1.1 One ATM. Where one ATMs or fare machines are provided, they shall be provided in accordance with Section 1117BG.7.2 through 1117B.8.~~

~~1117B.7.1.1.2 Two ATMs. Where two ATMs or fare machines are provided at a location, one shall comply with Section 1117B.7.2 through 1117B.7.8 and one shall comply with Section 1117B.6, Items 2 and 4, 1117B.7.2, 1117B.7.4, 1117B.7.5, 1117B.7.6, 1117B.7.7.2 and 1117B.7.8.~~

~~1117B.7.1.1.3 Three or more ATMs. Where three or more ATMs or fare machines are provided at a location, 50 percent shall comply with Section 1117B.7.2 through 1117B.7.8 and the rest shall comply with Sections 1117B.6, Items 2 and 4, 1117B.7.2, 1117B.7.4, 1117B.7.5, 1117B.7.6, 1117B.7.7.2 and 1117B.7.8.~~

~~1117B.7.1.2 Where bins are provided for envelopes, waste paper, or other purposes, at least one of each type shall comply with Section 1118B.4 and either 1118B.5 or 1118B.6.~~

~~1117B.7.1.3 Where point-of-sale devices are provided, all devices at each location shall comply with Sections 1117B.6 Item 4, 1117B.7.3.1, 11117B.7.7.2, and 1117B.7.9. Where a point-of-sale systems changed or modified to include a video touch screen or another non-tactile key-pad, all changed or modified point-of-sale devices at each location shall comply with Sections 1117B.6 Item 4, 1117B.7.3.1, 1117B.7.7.2, and 1117B.7.9. Where point-of-sale devices are provided at accessible check stands, sales or service counters, they shall also comply with Sections 1117B.7.2, 1117B.7.3 and 1117B.7.4.~~

~~1117B.7.2 Clear floor or ground space. A clear floor or ground space complying with Section 1118B.4 shall be provided.~~

~~Exception: Clear floor or ground space shall not be required at drive-up only ATMs, fare machine and point-of-sale devices.~~

~~1117B.7.3 Operable parts. Operable parts shall comply with Section 1117B.6.~~

~~Exception: Drive-up only ATMs, fare machines and point-of-sale devices shall not be required to comply with Section 1117B.6 Items 2 and 3.~~

~~1117B.7.3.1 Unless a clear or correct key is provided, each operable part shall be able to differentiated by sound or touch, without activation.~~

~~1117B.7.4 Privacy. Machines and devices shall provide the opportunity for the same degree of privacy of input and output available to all individuals.~~

~~1117B.7.5 Speech output. Machines shall be speech enabled. Operating instructions and orientation, visible transaction prompts, user input verification, error messages, and all displayed information for full use shall be accessible to and independently usable by individuals with vision impairments. Speech shall be delivered through a mechanism that is readily available to all users, including but not limited to, and industry standard connector or a telephone handset. Speech shall be recorded or digitized human, or synthesized.~~

~~Exceptions:~~

~~1. Audible tones shall be permitted instead of speech for visible output that is not displayed for security purposes, including but not limited to, asterisks representing personal identification numbers.~~

~~2. Advertisements and other similar information shall not be required to be audible~~

~~unless they convey information that can be used in the transaction being conducted.~~

~~3. Where speech synthesis cannot be supported; dynamic alphabetic output shall not be required to be audible.~~

~~1117B.7.5.1 User control. Speech shall be capable of being repeated or interrupted. Volume control shall be provided for the speech function~~

~~Exception: Speech output for any single function shall be permitted to be automatically interrupted when a transaction is selected.~~

~~1117B.7.5.2 Receipts. Where receipts are provided, speech output devices shall provide audible balance inquiry information, error messages, and all other information on the printed receipt necessary to complete or verify the transaction.~~

~~Exceptions:~~

~~1. Machine location, date and time of transaction, customer account number, and the machine identifier shall not be required to be audible.~~

~~2. Information on printed receipts that duplicates information available on-screen shall not be required to be presented in the form of an audible receipt.~~

~~3. Printed copies of bank statements and checks shall not be required to be audible.~~

~~1117B.7.6 Input. Input devices shall comply with Section 1117B.7.6.~~

~~1117.7.6.1 Input controls. At least one tactilely discernible input control shall be provided for each function. Where provided, key surfaces not on active areas of display screens shall be raised above surrounding surfaces. Where membrane keys are the only method of input, each shall be tactilely discernible from surrounding surfaces and adjacent keys.~~

~~1117B.7.6.2 Numeric keys. Function keys shall comply with Section 1117B.7.6.3.~~

~~1117B.7.6.3 Function keys. Function keys shall comply with Section 1117B.7.6.3.~~

~~1117B.7.6.3.1 Contrast. Function keys shall contrast visually from background surfaces. Characters and symbols on key surfaces shall contrast visually from key surfaces. Visually contrast shall be either light-on-dark or dark-on-light.~~

~~Exception: Tactile symbols required by Section 1117B.7.6.3.2 shall not be required to comply with Section 1117B7.6.3.1.~~

~~1117B7.6.3.1 Tactile symbols. Function key surfaces shall have tactile symbols as follows: Enter or Proceed key: raised circle; Clear or Correct key: raised left arrow; Cancel key: raised letter ex; Add Value key: raised plus sign; Decrease Value key: raised minus sign.~~

~~1117B.7.7 Display Screen. The display screen shall comply with Section 1117B.7.7.1.~~

~~Exception: Drive-up only automatic teller machines and fare machines shall not be required to comply with Section 1117B.7.7.1.~~

~~1117B.7.7.1 Visibility. The display screen shall be visible from a point located 40 inches (1016 mm) above the center of the clear floor space in front of the machine.~~

~~1117B.7.7.1.1 Vertically mounted display screen. When display screens are mounted vertically or no more than 30 degrees tipped away from the viewer, he center line of the display screen and other display devices shall be no more than 52 inches (1321 mm) above the floor or ground surface.~~

~~1117B.7.7.1.2 Angle-mounted display screen. Where display screens are mounted between 30 degrees and 60 degrees tipped away from the viewer, the center line of the display screen and other display devices shall be no more than 44 inches (1118 mm) above the floor or ground surface.~~

~~117B.7.7.1.3 Horizontally mounted display devices. Where display screens are mounted no less than 60 degrees and no more than 90 degrees (Horizontal) tipped away from the viewer, the center line of the display screen and other display devices shall be no more than 34 inches (864 mm) above the floor or ground surface.~~

~~1117B.7.7.2 Characters. Characters displayed on the screen shall be in a san serif font. Characters shall be 3/16 inch (4.8 mm) high minimum based on the uppercase letter "I". Characters shall contrast with their background with either light characters on a dark background or dark characters on a light background.~~

~~1117B.7.8 Braille instructions. Braille instructions for initiating the speech mode shall be provided. Braille shall comply with Section 1117B.5.6.~~

~~1117B.7.9 Point-of-sale devices. Point-of-sale systems that include a video touch screen or any other non-tactile keypad shall be equipped with either of the following:~~

~~1117B.7.9.1 a tactile discernible numerical keypad similar to a telephone keypad containing a raised dot with a dot base diameter between 1.5 mm and 1.6 mm and a height between 0.6 mm and 0.9 mm on the number 5 key that enables a visually impaired person to enter his or her own personal identification number or any other personal information necessary to process the transaction in a manner that provides the opportunity for the same degree of privacy input and output available to all individuals.~~

~~1117B.7.9.2 Other technology, such as a radio frequency identification device, fingerprint biometrics, or some other mechanism that enables a visually impaired person to access the video touch screen device with his or her personal identifier and to process his or her transaction in a manner that provides the opportunity for the same degree of privacy input and output available to all individuals. Where a video screen overlay is provided I shall be equipped with a tactilely discernible numerical keypad complying with Section 117B.7.9.1.~~

~~1117.8 Fitting and dressing rooms. Where fitting or dressing rooms are provided for male or female customers, patients, employees or the general public, 5 percent, but never less than one, of dressings rooms for each type of use in each cluster of dressing rooms shall be accessible and located on an accessible route complying with Section 1114B.1.2. Examples of types of dressing rooms are those serving different genders or distinct and different functions as in different treatment or examination facilities. Where only unisex dressing rooms are provided, accessible unisex dressing rooms may be used to fulfill this requirement.~~

~~Entry doors shall conform to the requirements of Section 1133B.2 and aisles leading to such doors shall conform to Sections 1133B.6.1 and 1133B.6.2.~~

~~The bottom of mirrors provided for use by persons with disabilities shall not be greater than 20 inches (508 mm) from the floor. Mirrors to be used by persons with disabilities shall be full length, measuring at least 18 inches (457 mm) wide by 54 inches (1372 mm) high, and shall be mounted in a position affording a view to a person on the bench as well as to a person in a standing position.~~

~~Clothing hooks shall be located not greater than 48 inches (1219 mm) from the floor.~~

~~Every accessible dressing room shall have a 24-inch by 48-inch (610 mm by 1219 mm) bench fixed to the wall along the longer dimension. The bench shall be mounted 17 to 19 inches (432 to 483 mm) above the finish floor. Clear floor space shall be provided alongside the bench to allow a person using a wheelchair to make a parallel transfer onto the bench. The structural strength of the bench and attachments shall comply with Section 1115B.7.2. Where installed in conjunction with showers, swimming pools or other wet locations,~~

~~water shall not accumulate upon the surface of the bench and the bench shall have a slip-resistant surface.~~

~~The minimum clear space within the room shall be 60 inches (1524 mm) in width and length. No door shall encroach into the required space.~~

~~1117B.9 Accessible sinks. Sinks required to be accessible shall comply with this subsection.~~

1. ~~A clear floor space at least 30 inches by 48 inches (762 mm by 1219 mm) complying with Section 1118B.4 shall be provided in front of a sink to allow forward approach. The clear floor space shall be on an accessible route and shall extend a maximum of 19 inches (485 mm) underneath the sink (see Figure 11B-1D).~~

2. ~~Each accessible sink shall be a maximum of 6½ inches (165 mm) deep. Sinks shall be mounted with the counter or rim no higher than 34 inches (865 mm) above the finish floor. Knee clearance that is at least 27 inches (685 mm) high, 30 inches (762 mm) wide and 19 inches (485 mm) deep shall be provided underneath sinks. Hot water and drain pipes exposed under sinks shall be insulated or otherwise configured so as to protect against contact. There shall be no sharp or abrasive surfaces under sinks~~

3. ~~Faucet controls and operating mechanisms shall be operable with one hand and shall not require tight grasping, pinching or twisting of the wrist. The force required to activate controls shall be not greater than 5 lbf (22.2 N). Lever operated, push-type and electronically controlled mechanisms are examples of acceptable designs. Self-closing valves are allowed if the faucet remains open for at least 10 seconds.~~

~~SECTION 1118B~~
~~SPACE ALLOWANCE AND REACH RANGES~~

~~1118B.1 Wheelchair passage width. The minimum clear width for single wheelchair passage shall be 32 inches (813 mm) at a point and 36 inches (914 mm) continuously. See Figure 11B-10. In addition, wheelchair passage widths shall comply with Figure 11B-5E(a) and (b) for circulation around obstructions.~~

~~1118B.2 Width for wheelchair passing. The minimum width for two wheelchairs to pass is 60 inches (1524 mm). See Figure 11B-11.~~

~~1118B.3 Wheelchair turning space. The space required for a wheelchair to make a 180-degree turn is a clear space of 60 inches (1524 mm) diameter [see Figure 11B-12(a)] or a T-shaped space. See Figure 11B-12(b).~~

~~1118B.4 Clear floor or ground space for wheelchairs~~

1. ~~Size and approach. The minimum clear floor or ground space required to accommodate a single, stationary wheelchair and occupant is 30 inches by 48 inches (762 mm by 1219 mm). The minimum clear floor or ground space for wheelchairs may be positioned for forward or parallel approach to an object. Clear floor or ground space for wheelchairs may be part of the knee space required under some objects. See Figure 11B-5A.~~

2. ~~Relationship of maneuvering clearances to wheelchair spaces. One full unobstructed side of the clear floor or ground space for a wheelchair shall adjoin or overlap an accessible route or adjoin another wheelchair clear floor space. If a clear floor space is located in an alcove or otherwise confined on all or a part of three sides, additional maneuvering clearances shall be provided as shown in Figure 11B-5A(b).~~

3. ~~Surfaces for wheelchair spaces. Clear floor or ground spaces for wheelchairs shall comply with Section 1124B Ground and Floor Surfaces.~~

~~1118B.5 Forward reach.~~

~~1118B.5.1 Unobstructed. Where a forward reach is unobstructed, the high forward reach shall be 48~~

~~*inches (1219 mm) maximum and the low forward reach shall be 15 inches (381 mm) minimum above the finish floor or ground. See Figure 11B-5C(a).*~~

~~*1118B.5.2 Obstructed high reach. Where a high forward reach is over an obstruction, the clear floor space shall extend beneath the element for a distance not less than the required reach depth over the obstruction. The high forward reach shall be 48 inches (1219 mm) maximum where the reach depth is 20 inches (508 mm) maximum. Where the reach depth exceeds 20 inches (508 mm), the high forward reach shall be 44 inches (1118 mm) maximum and the reach depth shall be 25 inches (635 mm) maximum and the reach depth shall be 25 inches (635 mm) maximum. See Figure 11B-5C(b) and (c).*~~

~~*1118B.6 Side reach.*~~

~~*1118B.6.1 Where a clear floor or ground space allows a parallel approach to an element and the side reach is unobstructed, the high side reach shall be 48 inches (1219 mm) maximum and t the low side reach shall be 15 inches (381 mm) minimum above the finish floor or ground. See Figure 11B-D(a).*~~

~~*Exception: An obstruction shall be permitted between the clear floor or ground space and the element where the depth of the obstruction is 10 inches (254 mm) maximum.*~~

~~*1118B.6.2 Obstructed high reach. Where a clear floor or ground space allows parallel approach to an element and the high side reach is over an obstruction, the height of the obstruction shall be 34 inches (864 mm) maximum and the depth of the obstruction shall be 24 inches (610 mm) maximum. The high side reach shall be 48 inches (1219 m) maximum for a reach depth of 10 inches (254 mm), the high side reach shall be 46 inches (1168 mm) maximum for a reach depth of 24 inches (610 mm) maximum. See Figure 11B-5D (b) and (c).*~~

~~*SECTION 1119B*~~
~~*SPECIAL STANDARDS OF ACCESSIBILITY FOR BUILDINGS WITH HISTORICAL SIGNIFICANCE*~~

~~*See Section 1135B.*~~

~~*SECTION 1120B*~~
~~*FLOORS AND LEVELS*~~

~~*1120B.1 Floors Within Each Story. In buildings and facilities, floors of a given story shall be a common level throughout, or shall be connected by pedestrian ramps, passenger elevators or platform (wheelchair) lifts.*~~

~~*Exceptions:*~~

1. ~~*In existing buildings, other than dining banquet and bar facilities, when the enforcing agency determines that compliance with this section would create an unreasonable hardship, an exception shall be granted when equivalent facilitation is provided.*~~

2. ~~*In existing dining, banquet and bar facilities, when the enforcing agency determines that compliance with this section would create an unreasonable hardship, an exception shall be granted, provided that a minimum of 75 percent of the dining, banquet and bar area shall be a common level throughout or shall be connected by pedestrian ramps, passenger elevators or special lifts and provided that the same services and décor are provided in an accessible space usable by the general public and are not restricted to use by people with disabilities.*~~

3. ~~*In existing buildings, this section shall not apply when legal or physical constraints would not allow compliance with this section or equivalent facilitation without creating an unreasonable hardship. See Section 1.9.5.*~~

4. ~~*Where specifically exempted in other portions of this code.*~~

~~*1120B.2 Floor Surface. The surface of floors shall be slip resistant and shall comply with Section 1124B.*~~

~~*SECTION 1121B*~~
~~*TRANSPORTATION FACILITIES*~~

~~*1121B.1 General. Every station, bus stop, bus stop pad, terminal, building or other transportation facility shall incorporate the accessibility requirements of this code as modified by this chapter. The exceptions for elevators in Section 1103B do not apply to a terminal, depot or other station used for specified public transportation, or an airport passenger terminal, or facilities subject to Title II of the Americans with Disabilities Act. In such a facility, any area housing passenger services, including boarding and debarking, loading and unloading, baggage claim, dining facilities, and other common areas open to the public must be on an accessible route from an accessible entrance.*~~

~~*1121B.2 Bus stops and terminals.*~~

~~*1121B.2.1 New construction. Where provided, bus stop pads shall have a firm, stable surface with a minimum clear length of 96 inches (2438 mm) (measured from the curb or vehicle roadway edge) and a minimum clear width of 60 inches (1524 mm) (measured parallel to the vehicle roadway) to the maximum extent allowed by legal or site constraints. Bus stop pads shall connect to streets, sidewalks or pedestrian paths as part of an accessible route complying with Section 1114B.1.2. Newly constructed bus stop pads must provide a square curb surface between the pad and road or other detectable warning in accordance with Section 1133B.8.5.*~~

~~*Bus stop pads shall be at same slope as roadway in the direction parallel to roadway, and maximum one unit vertical in 50 unit's horizontal (2 percent slope) perpendicular to roadway.*~~

~~*Where provided, bus stop shelters shall be installed so as to permit a wheelchair user to enter the shelter from the public way and access a clear floor area of 30 inches by 48 inches (762 mm by 1219 mm) complying with Section 1118B.4, completely within the shelter. Such shelters shall be connected by an accessible route to the boarding area. Where provided, all bus route identification signs shall comply with Section 1117B.5.1, Item 2.*~~

~~*Only approved DSA-AC detectable warning products and directional surfaces shall be installed as provided in the California Code of Regulations (CCR), Title 24, Part 1, Articles 2, 3 and 4. Refer to CCR Title 24, Part 12, Chapters 12-11A and B, for building and facility access specifications for product approval for detectable warning products and directional surfaces.*~~

~~*Detectable warning products and directional surfaces installed after January 1, 2001, shall be evaluated by an independent entity, selected by the Department of General Services, Division of the State Architect—Access Compliance, for all occupancies, including transportation and other outdoor environments, except that when products and surfaces are for use in residential housing, evaluation shall be in consultation with the Department of Housing and Community Development. See Government Code Section 4460.*~~

~~*1121B.2.2 Bus stop siting and alterations.*~~

1. ~~*Bus stop sites shall be chosen such that the areas where lifts or ramps are to be deployed comply with Section 1121B.2.1.*~~

2. ~~*When new bus route identification signs are installed or old signs are replaced, they shall comply with the requirements of Section 1121B.2.1.*~~

~~*1121B.3 Fixed facilities and stations.*~~

~~*1121B.3.1 New construction. New stations in rapid rail, light rail, commuter rail, intercity bus, intercity rail, high speed rail, and other fixed guideway systems (for example, automated guideway transit, monorails, etc.) shall comply with the following provisions, as applicable:*~~

1. ~~*Elements such as ramps, elevators or other circulation devices, fare vending or other ticketing areas, and fare collection areas shall be placed to minimize the distance which wheelchair users and other persons who cannot negotiate steps may have to travel compared to the general public. The circulation paths, each including an accessible entrance*~~

~~*and an accessible route, for persons with disabilities shall, to the maximum extent practicable, coincide with the circulation path for the general public. Where a circulation path is different, signage complying with Section 1117B.5.1, Items 2 and 3, shall be provided to indicate direction to and identify the accessible entrance and accessible route.*~~

~~*2. If different entrances to a station serve different transportation fixed routes or groups of fixed routes, entrances serving each group or route shall comply with Section 1133B.1.*~~

~~*3. Direct connections to commercial, retail or residential facilities shall have an accessible route complying with Section 1114B.1.2 from the point of connection to boarding platforms and all transportation system elements used by the public. Any elements provided to facilitate future direct connections shall be on an accessible route connecting boarding platforms and all transportation system elements used by the public.*~~

~~*4. Where signs are provided at entrances to stations identifying the station or the entrance, or both, at least one sign at each entrance shall comply with Section 1117B.5.1, Item 1. Such signs shall be placed in uniform locations at entrances within the transit system.*~~

~~*Exception: Where the station has no defined entrance, but signage is provided, the accessible signage shall be placed in a central location.*~~

~~*5. Stations covered by this section shall have identification signs complying with Section 1117B.5.1, Item 2. Signs shall be placed at frequent intervals and shall be clearly visible from within the vehicle on both sides when not obstructed by another train. When station identification signs are placed close to vehicle windows (that is, on the side opposite from boarding) each shall have the top of the highest letter or symbol below the top of the vehicle window and the bottom of the lowest letter or symbol above the horizontal mid line of the vehicle window.*~~

~~*6. Lists of stations, routes or destinations served by the station and located on boarding areas, platforms or mezzanines shall comply with Section 1117B.5.1, Item 2. A minimum of one sign identifying the specific station and complying with Section 1117B.5.1, Item 1, shall be provided on each platform or boarding area. All signs referenced in this paragraph shall be placed in uniform locations within the transit system.*~~

~~*7. Automatic fare vending, collection and adjustment (for example, add-fare) systems shall comply with Section 1117B.7. Such devices shall be located on an accessible route complying with Section 1114B.1.2.*~~

~~*If self-service fare collection devices are provided for the use of the general public, a minimum of 5 percent but not less than one accessible device for entering, and at least one for exiting, unless one device serves both functions, shall be provided at each location where such devices are provided.*~~

~~*Accessible fare collection devices shall have a minimum clear opening width of 32 inches (813 mm) and shall comply with the applicable requirements of Section 1117B.6.*~~

~~*Gates which must be pushed open by wheelchair or mobility aid users shall have a smooth continuous surface extending from 2 inches (51 mm) above the floor to 27 inches (686 mm) above the floor and shall comply with Sections 1133B.1 and 1133B.2.*~~

~~*8. Platform edges bordering a drop-off and not protected by platform screens or guards shall have a detectable warning. Such detectable warnings shall comply with the following provisions as applicable, and shall run the full length of the platform drop-off.*~~

~~*9.*~~

~~*(a) Detectable warnings at transit boarding platforms. Transit boarding platforms shall have a detectable warning texture extending the full length of the loading area. This detectable warning texture shall have the following features.*~~

~~Width 24 to 36 inches (610 mm to 914 mm) placed at the edge of the drop-off or safe area.~~

~~Durable, slip-resistant material having a surface texture composed of raised, truncated domes with a diameter of nominal 0.9 inch (22.9 mm) at the base tapering to 0.45 inch (11.4 mm) at the top, a height of nominal 0.2 inch (5.08 mm), and a center-to-center spacing of nominal 2.35 inches (59.7 mm) in compliance with Figure 11B-23A. "Nominal" as used here shall be in accordance with California State Referenced Standards Code Sections 12-11A and B-102. The detectable warning shall contrast visually with adjoining surfaces, either light on dark or dark on light. The material used to provide contrast shall be an integral part of the walking surface. Warning surfaces shall differ from adjoining walking surfaces in resiliency or sound-on-cane contact. This surface shall be reserved for warning.~~

~~Color yellow conforming to Federal Color No. 33538, as shown in Table IV of Standard No. 595B. Where the color value contrast between the yellow warning and the main walking surface is less than 70 percent, a 1 inch-wide (25 mm) black strip shall separate the yellow warning from the main walking surface. Contrast shall be determined by:~~

~~Contrast = [(B1-B2)/B1] x 100 percent where~~
~~B1 = light reflectance value (LRV) of the lighter area and~~
~~B2 = light reflectance value (LRV) of the darker area.~~

~~Only approved DSA-AC detectable warning products and directional surfaces shall be installed as provided in the California Code of Regulations (CCR), Title 24, Part 1, Articles 2, 3 and 4. Refer to CCR Title 24, Part 12, Chapters 12-11A and B, for building and facility access specifications for product approval for detectable warning products and directional surfaces.~~

~~Detectable warning products and directional surfaces installed after January 1, 2001, shall be evaluated by an independent entity, selected by the Department of General Services, Division of the State Architect—Access Compliance, for all occupancies, including transportation and other outdoor environments, except that when products and surfaces are for use in residential housing evaluation shall be in consultation with the Department of Housing and Community Development. See Government Code Section 4460.~~

~~(b) Detectable directional texture at boarding platforms. At transit boarding platforms, the pedestrian access shall be identified with a detectable directional texture. This detectable directional texture shall comply with Figure 11B-23B and shall be 0.1 inch (2.54 mm) in height that tapers off to 0.04 inch (1.02 mm), with bars raised 0.2 inch (5.08 mm) from the surface. The raised bars shall be 1.3 inches (33.02 mm) wide and 3 inches (76 mm) from center-to-center of each bar. This surface shall differ from adjoining walking surfaces in resiliency or sound-on-cane contact. The color of the directional texture shall comply with Section 1121B.3.1, Item 8(a). This surface will be placed directly behind the yellow detectable warning texture specified in Section 1121B.3.1, Item 8(a), aligning with all doors of the transit vehicles where passengers will embark. The width of the directional texture shall be equal to the width of the transit vehicle's door opening. The depth of the texture shall not be less than 36 inches (914 mm).~~

~~Only approved DSA-AC detectable warning products and directional surfaces shall be installed as provided in the California Code of Regulations (CCR), Title 24, Part 1, Articles 2, 3 and 4. Refer to CCR Title 24, Part 12, Chapters 12-11A and B, for building and facility access specifications for product approval for detectable warning products and directional surfaces.~~

~~Detectable warning products and directional surfaces installed after January 1, 2001, shall be evaluated by an independent entity, selected by the Department of General Services, Division of the State Architect—Access Compliance, for all occupancies, including transportation and other outdoor environments, except that when products and surfaces are for use in residential housing evaluation shall be in consultation with the Department of Housing and Community Development. See Government Code Section 4460.~~

~~9. In stations covered by this section, rail-to-platform height in new stations shall be coordinated with the floor height of new vehicles so that the vertical difference, measured when the vehicle is at rest, is within plus or minus ⅝ inch (15.9 mm) under normal passenger load conditions.~~

~~For rapid rail, light rail, commuter rail, high speed rail, and intercity rail systems in new stations, the horizontal gap, measured when the new vehicle is at rest, shall be no greater than 3 inches (76 mm).~~

~~For slow moving automated guideway "people mover" transit systems, the horizontal gap in new stations shall be no greater than 1 inch (25 mm).~~

~~Exceptions:~~

~~1. Existing vehicles operating in new stations may have a vertical difference with respect to the new platform within plus or minus 1½ inches (38 mm).~~

~~2. In light rail, commuter rail and intercity rail systems where it is not operationally or structurally feasible to meet the horizontal gap or vertical difference requirements, mini-high platforms, car-borne or platform-mounted lifts, ramps or bridge plates, or similar manually deployed devices, meeting the applicable requirements of 36 CFR Part 1192, or 49 CFR Part 38 shall suffice.~~

~~10. Stations shall not be designed or constructed so as to require persons with disabilities to board or alight from a vehicle at a location other than one used by the general public.~~

~~11. Illumination levels in the areas where signage is located shall be uniform and shall minimize glare on signs. Lighting along circulation routes shall be of a type and configuration to provide uniform illumination.~~

~~12. Text Telephones. The following shall be provided in accordance with Sections 1117B.2.9.2 and 1117B.2.9.3:~~

~~(a) If an interior public pay telephone is provided in a transit facility (as defined by the federal Department of Transportation) at least one interior public text telephone shall be provided in the station.~~

~~(b) Where four or more public pay telephones serve a particular entrance to a rail station and at least one is in an interior location, at least one interior public text telephone complying with Sections 1117B.2.9.2 and 1117B.2.9.3 shall be provided to serve that entrance.~~

~~13. Where it is necessary to cross tracks to reach boarding platforms, the route surface shall be level and flush with the rail top at the outer edge and between rails, except for a maximum 2½-inch (64 mm) gap on the inner edge of each rail to permit passage of wheel flanges. Such crossings shall comply with Section 1133B.8.5. Where gap reduction is not practicable, an above-grade or below-grade accessible route shall be provided.~~

14. ~~Where public address systems are provided to convey information to the public in terminals, stations, or other fixed facilities, a means of conveying the same or equivalent information to persons with hearing loss or who are deaf shall be provided.~~

15. ~~Where clocks are provided for use by the general public, the clock face shall be uncluttered so that its elements are clearly visible. Hands, numerals, and/or digits shall contrast with the background either light-on-dark or dark-on-light. Where clocks are mounted overhead, numerals and/or digits shall comply with Section 1117B.5.4. Clocks shall be placed in uniform locations throughout the facility and system.~~

16. ~~Where provided in below-grade stations, escalators shall have a minimum clear width of 32 inches (813 mm). At the top and bottom of each escalator run, at least two contiguous treads shall be level beyond the comb plate before the risers begin to form. All escalator treads shall be marked by a strip of clearly contrasting color, 2 inches (51 mm) in width, placed parallel to and on the nose of each step. The strip shall be of a material that is at least as slip resistant as the remainder of the tread. The edge of the tread shall be apparent from both ascending and descending directions.~~

17. ~~Where provided, elevators shall be glazed or have transparent panels to allow an unobstructed view both into and out of the car. Elevators shall comply with Section 1116B.~~

    ~~Exception: Elevator cars with a clear floor area in which a 60-inch-diameter (1524 mm) circle can be inscribed may be substituted for the minimum car dimensions of Section 1116B and Figure 11B-40A.~~

18. ~~Where provided, ticketing areas shall comply with Section 1122B.5, and the customer side of the baggage check-in area shall be accessible.~~

19. ~~Where provided, baggage check-in and retrieval systems shall be on an accessible route complying with Section 1114B.1.2 and shall have space immediately adjacent complying with Section 1118B.~~

    ~~If unattended security barriers are provided, at least one gate shall comply with Sections 1133B.1 and 1133B.2. Passageways containing security barriers shall comply with Section 1133B.2.3.4.~~

    ~~Gates which must be pushed open by wheelchair or mobility aid users shall have a smooth continuous surface extending from 2 inches (51 mm) above the floor to 27 inches (686 mm) above the floor.~~

~~1121B.3.2 Existing facilities—alterations. Alterations of transportation facilities shall comply with Section 1134B.~~

~~1121B.4 Airports.~~

~~1121B.4.1 New construction.~~

1. ~~Elements such as ramps, elevators or other vertical circulation devices, ticketing areas, security checkpoints or passenger waiting areas shall be placed to provide equitable travel distances for wheelchair users and other persons who cannot negotiate steps compared to the route for the general public.~~

2. ~~The circulation paths, each including an accessible entrance and an accessible route, for persons with disabilities shall, to the maximum extent practicable, coincide with the circulation path for the general public. Where a circulation path is different, signage complying with Section 1117B.5.1, Items 2 and 3, shall be provided to indicate direction to and identify the accessible entrance and accessible route.~~

~~3. Where provided, ticketing areas shall comply with Section 1122B.5, and the customer side of the baggage check-in area shall be accessible.~~

~~4. Where public pay telephones are provided, and at least one is at an interior location, a public text telephone shall be provided in compliance with Sections 1117B.2.9.2 and 1117B.2.9.3. Additionally, if four or more public pay telephones are located in any of the following locations, at least one public text telephone shall also be provided in that location: (a) a main terminal outside the security areas; (b) a concourse within the security areas; or (c) a baggage claim area in a terminal.~~

~~5. Where provided, baggage check-in and retrieval systems shall be on an accessible route complying with Section 1114B.1.2 and shall have space immediately adjacent complying with Section 1118B.~~

~~If unattended security barriers are provided, at least one gate shall comply with Sections 1133B.1 and 1133B.2. Passageways containing security barriers shall comply with Section 1133B.2.3.4.~~

~~Gates which must be pushed open by wheelchair or mobility aid users shall have a smooth continuous surface extending from 2 inches (51 mm) above the floor to 27 inches (686 mm) above the floor.~~

~~6. Terminal information systems which broadcast information to the general public through a public address system shall provide a means to provide the same or equivalent information to persons with a hearing loss or who are deaf. Such methods may include, but are not limited to, visual paging systems using video monitors and computer technology. For persons with certain types of hearing loss such methods may include, but are not limited to, an assistive listening system complying with Section 1104B.2.~~

~~7. Where clocks are provided for use by the general public the clock face shall be uncluttered so that its elements are clearly visible. Hands, numerals and/or digits shall contrast with their background either light-on-dark or dark-on-light. Where clocks are mounted overhead, numerals and/or digits shall comply with Section 1117B.5.4. Clocks shall be placed in uniform locations throughout the facility.~~

~~SECTION 1122B~~
~~FIXED OR BUILT-IN SEATING, TABLES, AND COUNTERS~~

~~1122B.1 Minimum number. Where fixed or built-in seating, tables or counters are provided in accessible public use or common use areas, 5 percent, but never less than one, must be accessible as provided in this section. An accessible route of travel complying with Section 1114B.1.2 shall lead to and through such fixed or built-in seating areas or tables.~~

~~1122B.2 Seating. If seating spaces for persons in wheelchairs are provided at fixed tables or counters, clear floor space complying with Section 1118B.4 shall be provided. Such clear floor space shall not overlap knee space by more than 19 inches (483 mm) (see Figure 11B-13).~~

~~1122B.3 Knee clearance. If seating for persons in wheelchairs is provided at fixed tables or counters, knee spaces at least 27 inches (686 mm) high, 30 inches (762 mm) wide and 19 inches (483 mm) deep shall be provided (see Figure 11B-13).~~

~~Exception: Knee clearance is not required at checkout counters or service counters.~~

~~1122B.4 Height of work surfaces. The tops of tables and counters shall be 28 inches to 34 inches (711 mm to 864 mm) from the floor or ground.~~

~~Where a single counter contains more than one transaction station, such as (but not limited to) a bank counter with multiple teller windows or a retail sales counter with multiple cash register stations, at least 5~~

~~*percent, but never less than one, of each type of station shall be located at a section of counter that is at least 36 inches (914 mm) long and no more than 28 to 34 inches (711 to 864 mm) high.*~~

~~*1122B.5 Sales and service counters, teller windows, and information counters. In department stores and miscellaneous retail stores where counters have cash registers and are provided for sales or distribution of goods or services to the public, at least one of each type shall have a portion of the counter which is at least 36 inches (915 mm) in length with a maximum height of 34 inches (864 mm) above the finish floor and located on an accessible route complying with Section 1114B.1.2.*~~

~~*At ticketing counters, teller stations in a bank, registration counters in hotels and motels, box office ticket counters and other counters that may not have a cash register but at which goods or services are sold or distributed, a portion of the main counter which is a minimum of 36 inches (915 mm) in length shall be provided with a maximum height of 34 inches (864 mm).*~~

> ~~*Exception: In existing buildings where it is determined that providing an accessible counter would create an unreasonable hardship, equivalent facilitation may consist of one of the following:*~~
>
> 1. ~~*An auxiliary counter, in close proximity to the main counter, meeting these requirements may be provided.*~~
>
> 2. ~~*Provision of a folding shelf attached to the main counter on which an individual with disabilities can write.*~~

~~***SECTION 1123B***~~
~~***ACCESS TO EMPLOYEE AREAS***~~

~~*1123B.1 General. Employee areas shall comply with the accessibility requirements of this chapter.*~~

~~*1123B.2 Work stations. Specific work stations need only comply with aisle width (Sections 1133B.6.1 and 1133B.6.2) and floors and levels (Section 1120B), and entryways shall be 32 inches (813 mm) in clear width.*~~

> ~~*Exception: Accessibility is not required to (1) observation galleries used primarily for security purposes; or (2) in nonoccupiable spaces accessed only by ladders, catwalks, crawl spaces, very narrow passageways or freight (nonpassenger) elevators, and frequented only by service personnel for repair purposes; such spaces include, but are not limited to, elevator pits, elevator penthouses, mechanical rooms, piping or equipment catwalks.*~~

~~***SECTION 1124B***~~
~~***GROUND AND FLOOR SURFACES***~~

~~*1124B.1 General. Ground and floor surfaces along accessible routes and in accessible rooms and spaces, including floors, walks, ramps, stairs and curb ramps, shall be stable, firm, slip resistant and shall comply with this section.*~~

~~*1124B.2 Changes in level. Changes in level up to ¼ inch (6.4 mm) may be vertical and without edge treatment [see Figure 11B-5E(c)]. Changes in level between ¼ inch (6.4 mm) and ½ inch (12.7 mm) shall be beveled with a slope no greater than one unit vertical in 2 units horizontal (50-percent slope) [see Figure 11B-5E(d)]. Changes in level greater than ½ inch (12.7 mm) shall be accomplished by means of a curb ramp, ramp, elevator or platform lift that complies with Sections 1127B.5, 1133B.5, 1116B.1 or 1116B.2, respectively.*~~

~~*1124B.3 Carpet. If carpet or carpet tile is used on a ground or floor surface, then it shall be securely attached; have a firm cushion, pad or backing or no cushion or pad; and have a level loop, textured loop, level-cut pile or level-cut/uncut pile texture. The maximum pile height shall be ½ inch (12.7 mm). See Figure 11B-7E(b). Exposed edges of carpet shall be fastened to floor surfaces and have trim along the entire length of the exposed edge. Carpet edge trim shall comply with Section 1124B.2.*~~

~~*1124B.4 Gratings. If gratings are located in walking surfaces, then they shall have spaces no greater than ½ inch (12.7 mm) wide in one direction (see Figure 11B-7E). If gratings have elongated openings, then they shall*~~

~~*be placed so that the long dimension is perpendicular to the dominant direction of travel (see Figure 11B-7E).*~~

~~***SECTION 1125B***~~
~~***STORAGE***~~

~~*1125B.1 General. If fixed storage facilities such as cabinets, shelves, closets or drawers are provided where access is required by Section 109.1 1.9.1, at least one of each type shall comply with this section. Additional storage may be provided outside of the reach ranges shown in Figure 11B-5D.*~~

~~*1125B.2 Clear floor space. A clear floor space at least 30 inches by 48 inches (762 mm by 1219 mm) complying with Section 1118B.4 that allows either a forward or parallel approach by a person using a wheelchair shall be provided at accessible storage facilities.*~~

~~*1125B.3 Height. Accessible storage spaces, including closets with a clothes rod or shelf, shall be within at least one of the reach ranges specified in Sections 1118B.5 and 1118B.6.*~~

~~*1125B.4 Hardware. Hardware for accessible storage facilities shall comply with Section 1117B.6. Touch latches and U-shaped pulls are acceptable.*~~

~~***SECTION 1126B***~~
~~***VENDING MACHINES AND OTHER EQUIPMENT***~~

~~*Spaces for vending machines and other equipment shall comply with Section 1118B and shall be located on an accessible route complying with Section 1114B.1.2. Controls for vending machines and other equipment shall comply with Section 1117B.6, Controls and Operating Mechanisms.*~~

~~***Division II – SITE ACCESSIBILITY***~~

~~***SECTION 1127B***~~
~~***EXTERIOR ROUTES OF TRAVEL***~~

~~*1127B.1 General. Site development and grading shall be designed to provide access to all entrances and exterior ground floor exits, and access to normal paths of travel, and where necessary to provide access, shall incorporate pedestrian ramps, curb ramps, etc. Access shall be provided within the boundary of the site from public transportation stops, accessible parking spaces, passenger loading zones if provided, and public streets or sidewalks. When more than one building or facility is located on a site, accessible routes of travel complying with Section 1114B.1.2 shall be provided between buildings and accessible site facilities, accessible elements, and accessible spaces that are on the same site. The accessible route of travel shall be the most practical direct route between accessible building entrances, accessible site facilities and the accessible entrance to the site. If access is provided for pedestrians from a pedestrian tunnel or elevated walkway, entrances to the building from each tunnel or walkway must be accessible.*~~

~~*Exceptions:*~~

1. ~~*Where the enforcing agency determines that compliance with these regulations would create an unreasonable hardship because of topography, natural barriers, etc., an exception may be granted when equivalent facilitation is provided through the use of other methods and materials.*~~

2. ~~*In existing buildings, this section shall not apply in those conditions where, due to legal or physical constraints, the site of the project would not allow compliance with these regulations or equivalent facilitation without creating an unreasonable hardship. See Section 109.1.5 1.9.1.5.*~~

~~*1127B.2 Design and construction. When accessibility is required by this section, it shall be designed and constructed in accordance with this Building Code. See Section 1114B.1 for a list of applicable sections.*~~

~~*1127B.3 Signs. At every primary public entrance and at every major junction where the accessible route of*~~

~~travel diverges from the regular circulation path along or leading to an accessible route of travel, entrance or facility, there shall be a sign displaying the International Symbol of Accessibility. Signs shall indicate the direction to accessible building entrances and facilities and shall comply with the requirements found in Sections 1117B.5.1 Item 2 and 1117B.5.8.1.~~

~~1127B.4 Outside stairways. See Section 1133B.4.~~

~~1127B.5 Curb ramps.~~

1. ~~General. Curb ramps shall be constructed at each corner of street intersections and where a pedestrian way crosses a curb. Built-up curb ramps shall be located so that they do not project into vehicular traffic lanes. The preferred and recommended location for curb ramps is in the center of the crosswalk of each street corner. Where it is necessary to locate a curb ramp in the center of the curb return and the street surfaces are marked to identify pedestrian crosswalks, the lower end of the curb ramp shall terminate within such crosswalk areas. See Figure 11B-20C, Case E and Figure 11B-22.~~

2. ~~Width of curb ramps. Curb ramps shall be a minimum of 4 feet (1219 mm) in width and shall lie, generally, in a single sloped plane, with a minimum of surface warping and cross slope.~~

3. ~~Slope of curb ramps. The slope of curb ramps shall not exceed one unit vertical in 12 units' horizontal (8.33-percent slope). The slope shall be measured as shown in Figure 11B-20E. Transitions from ramps to walks, gutters or streets shall be flush and free of abrupt change. Maximum slopes of adjoining gutters, road surface immediately adjacent to the curb ramp, or accessible route shall not exceed one unit vertical in 20 units' horizontal (5-percent slope) within 4 feet (1219 mm) of the bottom of the curb ramp. The slope of the fanned or flared sides of curb ramps shall not exceed one unit vertical in 10 unit's horizontal (10-percent slope).~~

4. ~~Level landing. A level landing 4 feet (1219 mm) deep shall be provided at the upper end of each curb ramp over its full width to permit safe egress from the ramp surface, or the slope of the fanned or flared sides of the curb ramp shall not exceed one unit vertical in 12 units horizontal (8.33-percent slope).~~

5. ~~Finish. The surface of each curb ramp and its flared sides shall comply with Section 1124B, Ground and Floor Surfaces, and shall be of contrasting finish from that of the adjacent sidewalk.~~

6. ~~Border. All curb ramps shall have a grooved border 12 inches (305 mm) wide at the level surface of the sidewalk along the top and each side approximately ¾ inch (19 mm) on center. All curb ramps constructed between the face of the curb and the street shall have a grooved border at the level surface of the sidewalk. See Figures 11B-19A and 11B-19B.~~

7. ~~Detectable warnings. Curb ramps shall have a detectable warning that extends the full width and depth of the curb ramp, excluding the flared sides, inside the grooved border. Detectable warnings shall be slip-resistant and consist of raised truncated domes with a diameter of nominal 0.9 inch (22.9 mm) at the base tapering to 0.45 inch (11.4 mm) at the top, a height of nominal 0.2 inch (5.08 mm) and a center-to-center spacing of nominal 2.35 inches (59.7 mm) in compliance with Figure 11B-23A. "Nominal" here shall be in accordance with Section 12-11A and B-102, State Referenced Standards Code. The detectable warning shall contrast visually with adjoining surfaces, either light-on-dark or dark-on-light. The material used to provide contrast shall be an integral part of the walking surface. The domes may be constructed in a variety of methods, including cast in place or stamped, or may be part of a prefabricated surface treatment.~~

   ~~Only approved DSA-AC detectable warning products and directional surfaces shall be installed as provided in the California Code of Regulations (CCR), Title 24, Part 1, Articles 2, 3 and 4. Refer to CCR Title 24, Part 12, Chapter 12-11A and B, for building and facility access specifications for product approval for detectable warning products and directional surfaces.~~

~~*Detectable warning products and directional surfaces installed after January 1, 2001, shall be evaluated by an independent entity, selected by the Department of General Services, Division of the State Architect-Access Compliance, for all occupancies, including transportation and other outdoor environments, except that when products and surfaces are for use in residential housing, evaluation shall be in consultation with the Department of Housing and Community Development. See Government Code Section 4460.*~~

~~*8. Obstructions. Curb ramps shall be located or protected to prevent their obstruction by parked vehicles.*~~

~~*9. Diagonal curb ramps. If diagonal (or corner-type) curb ramps have returned curbs or other well-defined edges, such edges shall be parallel to the direction of pedestrian flow. The bottom of diagonal curb ramps shall have 48 inches (1219 mm) minimum clear space as shown in Figure 11B-22(c) and (d). If diagonal curb ramps are provided at marked crossings, the 48-inch (1219 mm) clear space shall be within the markings [see Figure 11B-22(c) and (d)]. If diagonal curb ramps have flared sides, they shall also have at least a 24-inch (610 mm) long segment of straight curb located on each side of the curb ramp and within the marked crossing [see Figure 11B-22 (c)].*~~

~~*Notes:*~~

~~*1. For additional curb details, see Figures 11B-19A and 11B-19B.*~~

~~*2. If the distance from curb to back of sidewalk is too short to accommodate a ramp and a 4-foot (1219 mm) platform as in Figure 11B-20A, Case A, the sidewalk may be depressed longitudinally as in Figure 11B-20A, Case B, or Figure 11B-20B, Case C, or may be widened as in Figure 11B-20B, Case D.*~~

~~*3. If the sidewalk is less than 5 feet (1524 mm) wide, the full width of the sidewalk shall be depressed as shown in Figure 11B-20B, Case C.*~~

~~*4. As an alternate to Figure 11B-20A, Case A, one ramp may be placed in the center of the curb return as in Figure 11B-20C, Case E.*~~

~~*5. When a ramp is located in the center of a curb return, the crosswalk configuration must be similar to that shown on the plan to accommodate wheelchairs. See Figure 11B-22.*~~

~~*6. If the planting area width is equal to or greater than the ramp length, the ramp side slope distance equals 3 feet (914 mm). See Figure 11B-20D, Case G.*~~

~~*7. For Figure 11B-20C, Case F, and Figure 11B-20D, Case G, the longitudinal portion of the sidewalk may need to be depressed as shown in Figure 11B-20A, Case B.*~~

~~*8. If located on a curve, the sides of the ramp need not be parallel, but the minimum width of the ramp shall be 4 feet (1219 mm).*~~

~~*9. The ramp shall have a 12-inch-wide (305 mm) border with ¼-inch (6 mm) grooves approximately ¾ inch (19 mm) on center. See grooving detail, Figure 11B-20D, Case H.*~~

~~*SECTION 1128B*~~
~~*PEDESTRIAN GRADE SEPARATIONS (OVERPASSES AND UNDERPASSES)*~~

~~*Pedestrian ramps on pedestrian grade separations shall comply with the requirements of Section 1133B.5 for ramps.*~~

~~*Cross slopes of walking surfaces shall be the minimum possible and shall not exceed one unit vertical in 50 unit's horizontal (2-percent slope). The slope of any appreciably warped walking surface shall not exceed*~~

~~*one unit vertical in 12 unit's horizontal (8.33-percent slope) in any direction. Where pedestrian grade separations cross streets or other vehicular traffic ways, and where a street level crossing can reasonably and safely be used by persons with physical disabilities, there shall be provided conforming curb ramps and a usable pathway.*~~

~~*Exceptions:*~~

1. ~~*When the grade differential of the walking surface of a pedestrian grade separation exceeds 14 feet (4267 mm) due to required height clearance and grade conditions, and the enforcing agency finds that because of right-of-way restrictions, topography or natural barriers, wheelchair accessibility or equivalent facilitation would create an unreasonable hardship, such accessibility need not be provided. However, the requirements in these regulations relating to other types of mobility shall be complied with.*~~

2. ~~*For existing facilities, this section shall not apply where, due to legal or physical constraints, the site of the project will not allow compliance with these regulations or equivalent facilitation without creating an unreasonable hardship. See Section 1.9.1.5.*~~

~~*SECTION 1129B*~~
~~*ACCESSIBLE PARKING REQUIRED*~~

~~*1129B.1 General. Each lot or parking structure where parking is provided for the public as clients, guests or employees, shall provide accessible parking as required by this section. Accessible parking spaces serving a particular building shall be located on the shortest accessible route of travel (complying with Section 1114B.1.2) from adjacent parking to an accessible entrance. In parking facilities that do not serve a particular building, accessible parking shall be located on the shortest accessible route of travel to an accessible pedestrian entrance of the parking facility. In buildings with multiple accessible entrances with adjacent parking, accessible parking spaces shall be dispersed and located closest to the accessible entrances. Table 11B-6 establishes the number of accessible parking spaces required.*~~

~~*1129B.2 Medical Care Outpatient Facilities. At facilities providing medical care and other services for persons with mobility impairments, parking spaces complying with this section shall be provided in accordance with Table 11B-6 except as follows:*~~

1. ~~*Outpatient units and facilities. Ten percent of the total number of parking spaces provided shall serve each such outpatient unit or facility.*~~

2. ~~*Units and facilities that specialize in treatment or services for persons with mobility impairments. Twenty percent of the total number of parking spaces provided shall serve each such unit or facility.*~~

~~*TABLE 11B-6*~~
~~*SPACES REQUIRED*~~
~~*Establishes the number of accessible parking spaces required.*~~

~~*TOTAL NUMBER OF PARKING SPACES IN LOT OR GARAGE*~~	~~*MINIMUM REQUIRED NUMBER OF SPACES*~~
~~*1-25*~~	~~*1*~~
~~*26-50*~~	~~*2*~~
~~*51-75*~~	~~*3*~~
~~*76-100*~~	~~*4*~~
~~*101-150*~~	~~*5*~~
~~*151-200*~~	~~*6*~~
~~*201-300*~~	~~*7*~~
~~*301-400*~~	~~*8*~~
~~*401-500*~~	~~*9*~~
~~*501-1,000*~~	~~***~~
~~*1,001 and over*~~	~~****~~

~~**Two percent of total.*~~

~~**Twenty plus one for each 100, or fraction over 1,000.~~

~~1129B.3 Parking space size. Accessible parking spaces shall be located as near as practical to a primary entrance and shall be sized as follows:~~

1. ~~Dimensions. Where single spaces are provided, they shall be 14 feet (4267 mm) wide and lined to provide a 9-foot (2743 mm) parking area and a 5-foot (1524 mm) loading and unloading access aisle on the passenger side of the vehicle. When more than one space is provided in lieu of providing a 14-foot-wide (4267 mm) space for each parking space, two spaces can be provided within a 23-foot-wide (7010 mm) area lined to provide a 9-foot (2743 mm) parking area on each side of a 5-foot (1524 mm) loading and unloading access aisle in the center. The loading and unloading access aisle shall be marked by a border painted blue. Within the blue border, hatched lines a maximum of 36 inches (914 mm) on center shall be painted a color contrasting with the parking surface, preferably blue or white. See Figure 11B-18A. Parking access aisles shall be part of an accessible route of travel (complying with Section 1114B.1.2) to the building or facility entrance. Parked vehicle overhangs shall not reduce the clear width of an accessible route. The minimum length of each parking space, shall be 18 feet (5486 mm). The words "NO PARKING" shall be painted on the ground within each 5-foot (1524 mm) loading and unloading access aisle. This notice shall be painted in white letters no less than 12 inches (305 mm) high and located so that it is visible to traffic enforcement officials. See Figures 11B-18A, 11B-18B and 11B-18C.~~

2. ~~Van space(s). One in every eight accessible spaces, but not less than one, shall be served by a loading and unloading access aisle 96 inches (2438 mm) wide minimum placed on the side opposite the driver's side when the vehicle is going forward into the parking space and shall be designated van accessible as required by Section 1129B.4. All such spaces may be grouped on one level of a parking structure. The loading and unloading access aisle shall be marked by a border painted blue. Within the blue border, hatched lines a maximum of 36 inches (914 mm) on center shall be painted a color contrasting with the parking surface, preferably blue or white. The words "NO PARKING" shall be painted on the ground within each 8-foot (2438 mm) loading and unloading access aisle. This notice shall be painted in white letters no less than 12 inches (305 mm) high and located so that it is visible to traffic enforcement officials. See Figures 11B-18A, 11B-18B and 11B-18C.~~

3. ~~Arrangement of parking space. Arrangement of parking space. In each parking area, a bumper or curb shall be provided if required to prevent encroachment of cars over the required width of walkways. Also, the space shall be located so a person with a disability is not compelled to wheel or walk behind parking spaces other than that person's own accessible parking space. Pedestrian ways which are accessible to persons with disabilities shall be provided from each such parking space to related facilities, including curb cuts or ramps as needed. Ramps shall not encroach into any accessible parking space or the adjacent access aisle. See Figures 11B-18A through 11B-18C.~~

   ~~Exceptions:~~

   1. ~~Where the enforcing agency determines that compliance with any regulation of this section would create an unreasonable hardship, a variance or waiver may be granted when equivalent facilitation is provided.~~

   2. ~~Parking spaces may be provided which would require a person with a disability to wheel or walk behind a parking space other than that person's own accessible parking space when the enforcing agency determines that compliance with these regulations or providing equivalent facilitation would create an unreasonable hardship. See Section 1.9.1.5.~~

4. ~~Slope of parking space and access aisle. Surface slopes of accessible parking spaces and access aisles shall be the minimum possible and shall not exceed one unit vertical in 50 unit's horizontal (2 percent slope) in any direction.~~

~~5. Vertical clearance. Provide minimum vertical clearance of 98 inches (2489 mm) at accessible parking spaces and along at least one vehicle access route to such spaces from site entrances and exits.~~

~~1129B.4 Identification of parking spaces for off-street parking facilities. Each parking space reserved for persons with disabilities shall be identified by a reflectorized sign permanently posted immediately adjacent to and visible from each stall or space, consisting of the International Symbol of Accessibility in white on a dark blue background. The sign shall not be smaller than 70 square inches (4516 mm^2) in area and, when in a path of travel, shall be posted at a minimum height of 80 inches (2032 mm) from the bottom of the sign to the parking space finished grade. Signs may also be centered on the wall at the interior end of the parking space. An additional sign or additional language below the symbol of accessibility shall state "Minimum Fine $250."~~

~~Van accessible spaces complying with Section 1129B.3, Item 2 shall have an additional sign or additional language stating "Van Accessible" below the symbol of accessibility. Signs identifying accessible parking spaces shall be located so they cannot be obscured by a vehicle parked in the space.~~

~~An additional sign shall also be posted in a conspicuous place at each entrance to off-street parking facilities, or immediately adjacent to and visible from each accessible stall or space. The sign shall not be less than 17 inches by 22 inches (432 mm by 559 mm) in size with 1 inch (25 mm) high minimum lettering which clearly and conspicuously states the following:~~

~~"Unauthorized vehicles parked in designated accessible spaces not displaying distinguishing placards or special license plates issued for persons with disabilities will be towed away at the owner's expense. Towed vehicles may be reclaimed at _____ or by telephoning _____."~~
~~Blank spaces are to be filled in with appropriate information as a permanent part of the sign.~~

~~In addition to the above requirements, the surface of each accessible parking space or stall shall have a surface identification duplicating either of the following schemes:~~

~~1. By outlining or painting the stall or space in blue and outlining an International Symbol of Accessibility on the ground in the stall or space in white or contrasting color; or~~

~~2. By outlining an International Symbol of Accessibility on the ground in the stall or space in white on blue background.~~

~~3.~~
~~The International Symbol of Accessibility shall be a minimum 36 inches wide (914 mm) by 914 mm) and shall be aligned with the end of the stall or space adjacent to the traffic aisle so that it is visible to a traffic enforcement officer when a vehicle is properly parked in the space. See Figures 11B-18A, 11B-18B and 11B-18C.~~

~~SECTION 1130B~~
~~PARKING STRUCTURES~~

~~1130B.1 All entrances to and vertical clearances within parking structures shall comply with Section 1129B.3, Item 5 where required for accessibility to accessible parking spaces.~~

~~Exceptions:~~

~~1. Where the enforcing agency determines that compliance with Section 1130B.1 would create an unreasonable hardship, an exception may be granted when equivalent facilitation is provided.~~

~~2. This section shall not apply to existing buildings where the enforcing agency determines that, due to legal or physical constraints, compliance with these regulations or equivalent facilitation would create an unreasonable hardship. See Section 1.9.1.5.~~

~~1130B.2 When direct access is provided for pedestrians from a parking garage to a building, each direct~~

~~*entrance from the garage to the building must be accessible.*~~

~~*SECTION 1131B*~~
~~*PASSENGER DROP-OFF AND LOADING ZONES*~~

~~*1131B.1 Location. When provided, passenger drop-off and loading zones shall be located on an accessible route of travel (complying with Section 1114B.1.2) and shall comply with 1131B.2.*~~

~~*1131B.2 Passenger loading zones.*~~

1. ~~*General. Where provided, one passenger drop-off and loading zone shall provide an access aisle at least 60 inches (1524 mm) wide and 20 feet (6096 mm) long adjacent and parallel to the vehicle pull-up space. Vehicle standing spaces and access aisles shall be level with surface slopes not exceeding one unit vertical in 50 unit's horizontal (2-percent slope) in all directions. If there are curbs between the access aisle and the vehicle pull-up space, a curb ramp shall be provided. Each passenger drop-off and loading zone designed for persons with disabilities shall be identified by a reflectorized sign, complying with Section 1117B.5.1 Items 2 and 3, permanently posted immediately adjacent to and visible from the passenger drop-off or loading zone stating "Passenger Loading Zone Only" and including the International Symbol of Accessibility, in white on dark blue background.*~~

2. ~~*Vertical clearance. Provide minimum vertical clearance of 114 inches (2896 mm) at accessible passenger loading zones and along at least one vehicle access route to such areas from site entrances and exits.*~~

~~*1131B.3 Valet parking. Valet parking facilities shall provide a passenger loading zone complying with Section 1131B.2 above and shall be located on an accessible route of travel (complying with Section 1114B.1.2) to the entrance of the facility. The parking space requirements of Sections 1129B through 1130B apply to facilities with valet parking.*~~

~~*1131B.4 Bus stop pads and shelters. See Section 1121B.2.1.*~~

~~*SECTION 1132B*~~
~~*OUTDOOR OCCUPANCIES*~~

~~*1132B.1 General. Outdoor occupancies shall be accessible as required in this chapter. See also the general requirements in Section 1114B.1.1.*~~

~~*1132B.2 Parks and recreational areas. The following parks and recreational areas shall comply with these regulations.*~~

~~*Exceptions:*~~

1. ~~*In existing buildings, when the enforcing agency determines that compliance would create an unreasonable hardship, a variance shall be granted when equivalent facilitation is provided.*~~

2. ~~*Where the enforcing agency finds that, in specific areas, the natural environment would be materially damaged by compliance with these regulations, such areas shall be subject to these regulations only to the extent that such material damage would not occur.*~~

3. ~~*Automobile access shall not be provided or paths of travel shall not be made accessible when the enforcing agency determines that compliance with these regulations would create an unreasonable hardship.*~~

1. ~~*Campsites. Campsites, a minimum of two and no fewer than three for each 100 campsites provided, shall be accessible by a level path or ramp and shall have travel routes with slopes not exceeding one unit vertical in 12 unit's horizontal (8.33-percent slope) to sanitary facilities. Permanent sanitary facilities serving campgrounds shall be accessible to wheelchair occupants.*~~

~~2. Beaches, picnic areas. Beaches, picnic areas, day-use areas, vista points and similar areas shall be accessible.~~

~~3. Sanitary facilities. Sanitary facilities, to the extent that such facilities are provided, each public use area that is accessible to wheelchair occupants by automobile, walks or other paths of travel.~~

~~4. Boat docks. Boat docks, fishing piers, etc., shall be accessible.~~

~~5. Parking lots. Parking lots shall be provided with accessible parking spaces and with curb cuts leading to all adjacent walks, paths or trails.~~

~~6. Trails and paths. Trails, paths and nature walk areas, or portions of these, shall be constructed with gradients which will permit at least partial use by wheelchair occupants. Hard surface paths or walks shall be provided to serve buildings and other functional areas.~~

~~7. Nature trails. Nature trails and similar educational and informational areas shall be accessible to the blind by the provision of rope guidelines, raised Arabic numerals and symbols for identification, information signs, and related guide and assistance devices.~~

~~For museums, orientation buildings, visitor centers, office buildings, retail stores, restaurants, etc., and sanitary facilities serving these uses, see Sections 1104B through 1111B and sections listed in Section 1114B.1.1.~~

~~1132B.3 Highway rest areas. The specific standards of accessibility for highway rest areas and similar facilities shall be as follows in Section 1132B.3.1, subject to other provisions in these regulations.~~

~~1132B.3.1 Permanent facilities. At least one kind of permanent functional area or facility, as applicable, shall be accessible to persons with disabilities, including:~~

~~1. A sanitary facility for each sex.~~

~~2. At least one picnic table and one additional table for each 20 tables, or fraction thereof provided.~~
~~3. Information and display areas~~

~~4. Drinking fountains.~~

~~5. At least one parking space.~~

~~6. Curb ramps conforming to Section 1127B.5 shall be provided at pedestrian ways where appropriate.~~

~~Division III – ACCESSIBILITY FOR ENTRANCES, EXITS AND PATHS OF TRAVEL~~

~~This division includes additional requirements which supersede less restrictive requirements in Chapter 10 where access is required.~~

~~SECTION 1133B~~
~~GENERAL ACCESSIBILITY FOR ENTRANCES, EXITS AND PATHS OF TRAVEL~~

~~1133B.1 Building accessibility. See this chapter.~~

~~1133B.1.1 Entrances.~~

~~1133B.1.1.1 Entrances and exterior ground floor exit doors.~~

~~1133B.1.1.1.1 All entrances and exterior ground-floor exit doors to buildings and facilities shall be~~

~~*made accessible to persons with disabilities. Such entrances shall be connected by an accessible route (complying with Section 1114B.1.2) to public transportation stops, to accessible parking and passenger loading zones and to public streets or sidewalks, if available. Entrances shall be connected by an accessible route to all accessible spaces or elements within the building or facility. Doorways shall have a minimum clear opening of 32 inches (813 mm) with the door open 90 degrees, measured between the face of the door and the opposite stop (see Figure 11B-5B). Openings more than 24 inches (610 mm) in depth shall comply with Section 1118B.*~~

~~*Exceptions:*~~

1. ~~*Exterior ground-floor exits serving smoke-proof enclosures, stairwells and exit doors servicing stairs only need not be made accessible.*~~

2. ~~*Exits in excess of those required by Chapter 10, and which are more than 24 inches (610 mm) above grade are not required to be accessible. Such doors shall have signs warning that they are not accessible. Warning signs shall comply with Section 1117B.5.1 Item 2.]*~~

3. ~~*In existing buildings where the enforcing agency determines that compliance with the building standards of this section would create an unreasonable hardship, an exception shall be granted when equivalent facilitation is provided. Equivalent facilitation would require at least one entrance to be accessible to and usable by persons with disabilities.*~~

4. ~~*These building standards shall not apply to existing buildings when legal or physical constraints will not allow compliance with these building standards or equivalent facilitation without creating an unreasonable hardship. See Section 109.1.5 1.9.1.5, Special Conditions for Persons with Disabilities Requiring Appeals Action Ratification.*~~

~~*1133B.1.1.1.2 Temporary restrictions. During periods of partial or restricted use of a building or facility, the entrances used for primary access shall be accessible to and usable by persons with disabilities.*~~

~~*1133B.1.1.1.3 Recessed doormats. Recessed doormats shall be adequately anchored to prevent interference with wheelchair traffic.*~~

~~*1133B.1.1.1.4 Gates. All gates, including ticket gates, shall meet all applicable specifications for doors.*~~

~~*1133B.1.1.1.5 Service Entrances. In existing buildings and facilities, a service entrance shall not be the sole accessible entrance unless it is the only entrance to a building or facility (for example, in a factory or garage).*~~

~~*1133B.2 Doors.*~~

~~*1133B.2.1 Type of lock or latch. See Chapter 10, Section 1008.1.8.*~~

~~*1133B.2.2 Width and height. Every required exit doorway shall be of a size as to permit the installation of a door not less than 3 feet (914 mm) in width and not less than 6 feet 8 inches (2032 mm) in height.*~~

~~*When installed in exit doorways, exit doors shall be capable of opening at least 90 degrees and shall be so mounted that the clear width of the exitway is not less than 32 inches (813 mm) measured between the face of the door and the opposite stop (see Figure 11B-5B). In computing the exit width the net dimension of the exitway shall be used.*~~

~~*Exception: Doors not requiring full user passage, such as shallow closets, may have the clear opening reduced to 20 inches (510 mm) minimum.*~~

~~*1133B.2.3 Hinged doors. For hinged doors, the opening width shall be measured with the door positioned at an angle of 90 degrees from its closed position.*~~

~~*1133B.2.3.1 Pairs of doors. Where a pair of doors is utilized, at least one of the doors shall provide a clear, unobstructed opening width of 32 inches (813 mm) with the leaf positioned at an angle of 90 degrees from its closed position. See Figure 11b-5B(b).*~~

~~*1133B.2.3.2 Automatic and power-assisted doors. If an automatic door is used, then it shall comply with BHMA A156.10. Slowly opening, low-powered, automatic doors shall comply with BHMA A156.19. Such doors shall not open to back check faster than 3 seconds and shall require no more than 15 lbf (66.72 N) to stop door movement. If a power-assisted door is used, its door-opening force shall comply with 1133B.2.5 and its closing shall conform to the requirements in BHMA A156.19. When an automatic door operator is utilized to operate a pair of doors, at least one of the doors shall provide a clear, unobstructed opening width of 32 inches (813 mm) with the door positioned at an angle of 90 degrees from its closed position.*~~

~~*Exceptions:*~~

1. ~~*In existing buildings, where the occupant load is less than 10, except Group I, Division 1 Occupancies, or where the occupant load is greater than 10 and it is determined that compliance with Section 1133B.2.3 would create an unreasonable hardship, a projection of ⅝ inch (16 mm) maximum will be permitted for the latch side stop.*~~

2. ~~*In existing buildings, the provisions of this section shall not apply when legal or physical constraints will not allow compliance with these building standards or equivalent facilitation without creating an unreasonable hardship. See Section 1.9.1.5.*~~

~~*1133B.2.3.3 Revolving doors. Revolving doors shall not be used as a required entrance for persons with disabilities.*~~

~~*1133B.2.3.4 Turnstiles, rails and pedestrian controls. Where turnstiles and crowd control barriers are utilized in a facility for the purpose of providing fully controlled access, such as where an admission price is charged, a door or gate that is accessible to persons with disabilities shall be provided adjacent to each turnstile exit or entrance. This alternate passageway shall be maintained in an unlocked condition during business hours and the door or gate shall not activate a publicly audible alarm system. The door or gate may be latched where all gates are restricted and controlled by an attendant and a sign is posted stating, "All gates are restricted and controlled by an attendant". The accessible door or gate shall provide the same use pattern. Where posts, rails or other pedestrian controls are utilized to create crowd control aisles or lanes, a minimum of one lane shall be accessible and shall provide a minimum aisle width no less than indicated in Figure 11B-5E (a) and (b) with 32 inches (813 mm) of clear opening.*~~

~~*Exception: In existing buildings, Section 1133B.2.3 shall not apply when physical constraints or equivalent facilitation will not allow compliance with these building standards without creating an unreasonable hardship. See Section 1.9.1.5.*~~

~~*1133B.2.4 Floor level at doors. Regardless of the occupant load, there shall be a floor or landing on each side of a door.*~~

~~*1133B.2.4.1 Thresholds. The floor or landing shall not be more than ½ inch (12.7 mm) lower than the threshold of the doorway. Change in level between ¼ inch (6 mm) and ½ inch (12.7 mm) shall be beveled with a slope no greater than one unit vertical in 2 unit's horizontal (50-percent slope). Change in level greater than ½ inch (12.7 mm) shall be accomplished by means of a ramp. See Section 1133B.5.1.*~~

~~*1133B.2.4.2 Maneuvering clearances at doors. Minimum maneuvering clearances at doors shall be as shown in Figures 11B-26A, 11B-26B and 11B-26C. The floor or ground area within the required maneuvering clearances shall be level and clear.*~~

~~The level area shall have a length in the direction of door swing of at least 60 inches (1524 mm) and the length opposite the direction of door swing of 48 inches (1219 mm) as measured at right angles to the plane of the door in its closed position.~~

~~Exception: The length opposite the direction of door swing shall be a minimum of 44 inches (1118 mm) where the door has no closer and approach to the door by a person in a wheelchair can be made from the latch side, or if the door has neither latch nor closer and approach can be made from the hinge side. See Figure 11B-26A and 11B-26B.~~

~~1133B.2.4.3 The width of the level area on the side to which the door swings shall extend 24 inches (610 mm) past the strike edge of the door for exterior doors and 18 inches (457 mm) past the strike edge for interior doors.~~

~~Twenty-four inches (610 mm) is preferred for strike-side clearance.~~

~~1133B.2.4.4 The space between two consecutive door openings in a vestibule, serving other than a required exit stairway shall provide a minimum of 48 inches (1219 mm) of clear space from any door opening into such vestibule when the door is positioned at an angle of 90 degrees from its closed position. Doors in a series shall swing either in the same direction or away from the space between the doors. See Figures 11B-30 and 11B-31.~~

~~1133B.2.4.5 Recessed doors. Where a door required to be accessible by Section 1133B.1.1.1 is located in a recess or alcove where the distance from the face of the wall to the face of the door is greater than 8 inches, strike side clearances as prescribed in Section 1133B.2.4.3 shall be provided. See Figure 11B-33(a).~~

~~1133B.2.5 Door Opening Force. The maximum force required to push or pull open a door shall comply with this section. Push or pull force for a hinged door shall be measured perpendicular to the door face at the door opening hardware or 30 inches (762 mm) from the hinged side, whichever is farther from the hinge. Push or pull force for a sliding or folding door shall be measured parallel to the door at the door pull or latch. Compensating devices or automatic door operators complying with Section 1133B.2.3.2 may be used to meet the maximum force limits.~~

1. ~~Required fire doors shall have the minimum opening force allowable by the appropriate administrative authority, not to exceed 15 lbf (66.7 N).~~

2. ~~Other than required fire doors, interior doors shall have a maximum opening force of 5 lbf (22.2 N).~~

3. ~~Other than required fire doors, exterior doors shall have a maximum opening force of 5 lbf (22.2 N).~~

~~Exceptions:~~

1. ~~Exterior doors to machinery spaces including, but not limited to, elevator pits or elevator penthouses; mechanical, electrical or communications equipment rooms; piping or equipment catwalks; electric substations and transformer vaults; and highway and tunnel utility facilities.~~

2. ~~When, at a single location, one of every 8 exterior door leafs, or fraction of 8, is a powered door, other exterior doors at the same location, serving the same interior space, may have a maximum opening force of 8.5 lbf (37.8 N). The powered leaf(s) shall be located closest to the accessible route.~~

   ~~a. Powered doors shall comply with Section 1133B.2.3.2. Powered doors shall be fully automatic doors complying with Builders Hardware Manufacturers' Association (BHMA) A156.10 or low-energy operated doors complying with BHMA A156.19.~~

   ~~b.~~

~~b. Powered doors serving a building or facility with an occupancy of 150 or more shall be provided with a back-up battery or back-up generator. The back-up power source shall be able to cycle the door a minimum of 100 cycles.~~

~~c. Powered doors shall be controlled on both the interior and exterior sides of the doors by sensing devices, push plates, vertical actuation bars or other similar operating devices complying with Section 1117B.6.~~

~~At each location where push plates are provided there shall be two push plates; the centerline of one push plate shall be 7 inches (178 mm) minimum and 8 inches (203 mm) maximum above the floor or ground surface and the centerline of the second push plate shall be 30 inches (762 mm) minimum and 44 inches (1219 mm) maximum above the floor or ground surface. Each push plate shall be a minimum of 4 inches (102 mm) diameter or a minimum of 4 inches by 4 inches (102 mm by 102 mm) square and shall display the International Symbol of Accessibility complying with Section 1117B.5.8.1.~~

~~At each location where vertical actuation bars are provided the operable portion shall be located so the bottom is 5 inches (127 mm) maximum above the floor or ground surface and the top is 35 inches (889 mm) minimum above the floor or ground surface. The operable portion of each vertical actuation bar shall be a minimum of 2 inches (51 mm) wide and shall display the International Symbol of Accessibility complying with Section 1117B.5.8.1.~~

~~Where push plates, vertical actuation bars or other similar operating devices are provided, they shall be placed in a conspicuous location. A level and clear floor or ground space for forward or parallel approach complying with Sections 1118B.4 and 1124B.1 shall be provided, centered on the operating device. Doors shall not swing into the required clear floor or ground space.~~

~~d. Signage identifying the accessible entrance required by Section 1127B.3 shall be placed on, or immediately adjacent to, each powered door. Signage shall be provided in compliance with BHMA A156.10 or BHMA 156.19, as applicable.~~

~~e. In addition to the requirements of Item d, where a powered door is provided in buildings or facilities containing assembly occupancies of 300 or more, a sign displaying the International Symbol of Accessibility measuring 6 inches by 6 inches (152 mm by 152 mm), complying with Section 1117B.5.8.1, shall be provided above the door on both the interior and exterior sides of each powered door.~~

~~1133B.2.5.1 Door closer. If the door has a closer, then the sweep period of the closer shall be adjusted so that from an open position of 70 degrees, the door will take at least 3 seconds to move to a point 3 inches (75 mm) from the latch, measured to the leading edge of the door.~~

~~1133B.2.5.2 Hand-activated door opening hardware, handles, pulls, latches, locks, and other operating devices on accessible doors shall have a shape that is easy to grasp with one hand and does not require tight grasping, tight pinching or twisting of the wrist to operate. Hardware shall be centered between 30 inches (762 mm) and 44 inches (1118 mm) above the floor. Latching and locking doors that are hand-activated and which are in a path of travel shall be operable by lever-type hardware, panic bars, push-pull activating bars, U-shaped handles or other hardware designed to provide passage. Locked exit doors shall operate as above in egress direction.~~

~~1133B.2.6 Smooth surface. The bottom 10 inches (254 mm) of all doors except automatic and sliding shall have a smooth, uninterrupted surface to allow the door to be opened by a wheelchair footrest without creating a trap or hazardous condition. Where narrow frame doors are used, a 10-inch (254 mm) high smooth panel shall be installed on the push side of the door, which will allow the door to be opened by a wheelchair footrest without creating a trap or hazardous condition. See Figure 11b-29.~~

~~1133B.3 Corridors, hallways and exterior exit balconies.~~

~~1133B.3.1 Corridor and hallway widths. Every corridor and hallway serving an occupant load of 10 or more shall not be less than 44 inches (1118 mm) in width. Corridors and hallways serving an occupant load of less than 10 shall not be less than 36 inches (914 mm) in width.~~

~~1133B.3.2 Corridors and hallways over 200 feet (60 960 mm). Corridors and hallways that are located on an accessible route and exceed 200 feet (60 960 mm) in length shall have a minimum clear width of 60 inches (1524 mm). If an accessible route has less than 60 inches (1524 mm) clear width, then passing spaces at least 60 inches by 60 inches (1524 mm by 1524 mm) shall be located at intervals of 200 feet (60 960 mm) maximum. A "T" intersection of two corridors or walks is an acceptable passing place. See Figure 11b-34.~~

~~Exceptions:~~

1. ~~In existing buildings, when the enforcing agency determines that compliance with any building standard under this section would create an unreasonable hardship, an exception to such building standard shall be granted when equivalent facilitation is provided.~~

2. ~~In existing buildings, the provisions of this section shall not apply when legal or physical constraints will not allow compliance with these building standards or equivalent facilitation without creating an unreasonable hardship. See Section 1.9.1.5.~~

~~1133B.4 Stairways. Stairways shall conform to the provisions of this section.~~

~~1133B.4.1 Handrails.~~

~~1133B.4.1.1 Required handrails. Stairways shall have handrails on each side. Handrails shall be continuous along both sides of a stairway. Intermediate handrails shall be provided as required in Section 1012.8.~~

~~1133B.4.2 Handrail configuration.~~

~~1133B.4.2.1 The top of handrail gripping surface shall be mounted between 34 to 38 inches (864 to 965 mm) above the nosing of the treads. See Figure 11B-35.~~

~~1133B.4.2.2 Handrails shall extend a minimum of 12 inches (305 mm) beyond the top nosing and 12 inches (305 mm), plus the tread width, beyond the bottom nosing. At the top, the extension shall be parallel with the floor or ground surface. At the bottom, the handrail shall continue to slope for a distance of the width of one tread from the bottom riser; the remainder of the extension shall be horizontal. The extensions of handrails shall be in the same direction of the stair flights. See Figures 11B-35 and 11B-37.~~

~~Exceptions:~~

1. ~~In new construction, the inside handrail on switchback or dogleg stairs shall always be continuous.~~

2. ~~In existing buildings and facilities, full extension of handrails at stairs shall not be required in alterations where such extensions would be hazardous or impossible due to plan configuration.~~

~~1133B.4.2.3 Ends shall be returned smoothly to floor, wall or post.~~

~~1133B.4.2.4 The orientation of at least one handrail shall be in the direction of the run of the stair and perpendicular to the direction of the stair nosing, and shall not reduce the minimum required width of the stairs.~~

~~1133B.4.2.5 Handrails projecting from a wall shall have a space of 1-½ inches (38 mm) between the wall and the handrail.~~

~~Handrails may be located in a recess if the recess is a maximum of 3 inches (76 mm) deep and extends at least 18 inches (457 mm) above the top of the rail. Handrails shall not rotate in their fittings. See Figure 11b-36(b).~~

~~1133B.4.2.6 Handgrips. The handgrip portion of handrails shall be not less than 1-¼ inches (32 mm) nor more than 1-½ inches (38 mm) in cross-sectional nominal dimension or the shape shall provide an equivalent gripping surface. The handgrip portion of handrails shall have a smooth surface with no sharp corners. Gripping surfaces (top or sides) shall be uninterrupted by newel posts, other construction elements or obstructions. Adjacent elements shall be positioned to provide unobstructed use of handrails. Any wall or other surface adjacent to the handrail shall be free of sharp or abrasive elements. Edges shall have a minimum radius of ⅛ inch (3.2 mm). See Figure 11b-36.~~

~~Exceptions:~~

1. ~~In existing buildings when the enforcing agency determines that compliance with any requirement under Section 1133B.4.2 would create an unreasonable hardship, an exception to the requirement for persons with disabilities may be granted when equivalent facilitation is provided~~

2. ~~These regulations shall not apply in existing buildings where legal or physical constraints will not allow compliance with these regulations or equivalent facilitation without creating an unreasonable hardship. See Section 1.9.1.5.~~

~~1133B.4.3 Tactile floor identification signs that comply with Section 1117B.5 Item 1 shall be located at each floor level landing in all enclosed stairways in buildings two or more stories in height to identify the floor level. At exit discharge level, the sign shall include a raised five pointed star located to the left of the identifying floor level. The outside diameter of the star shall be the same as the height of the raised characters.~~

~~1133B.4.4 Striping for the visually impaired. Interior stairs shall have the upper approach and lower tread marked by a stripe providing clear visual contrast. Exterior stairs shall have the upper approach and all treads marked by a stripe providing clear visual contrast. See Figures 11b-35,~~

~~The stripe shall be a minimum of 2 inches (50.8 mm) wide to a maximum of 4 inches (101.6 mm) wide placed parallel to, and not more than 1 inch (25.4 mm) from, the nose of the step or upper approach. The stripe shall extend the full width of the step or upper approach and shall be of a material that is at least as slip resistant as the other treads of the stair. A painted stripe shall be acceptable.~~

~~1133B.4.5 Stair treads, risers and nosing. Stair treads shall be no less than 11 inches (279 mm) deep, measured from riser to riser. Stair riser heights shall be 7 inches (187 mm) maximum and 4 inches (102 mm) minimum. On any given flight of stairs, all steps shall have uniform riser height and uniform tread widths.~~

~~1133B.4.5.1 Treads. All tread surfaces shall be slip resistant. Weather-exposed stairs and their approaches shall be designed so that water will not accumulate on the walking surfaces. Treads shall have smooth, rounded or beveled exposed edges. See Figure 11b-35.~~

~~1133B.4.5.2 Risers. Risers shall be solid and shall be vertical [see Figure 11B-35(a)] or sloped from the underside of the leading edge of the tread above at an angle not more than 30 degrees (0.52 rad) from the vertical [see Figure 11B-35(b)]. Open risers are not permitted.~~

~~Exceptions:~~

1. ~~On exterior stairways, an opening of not more than ½ inch (12.7 mm) may be permitted between the base of the riser and the tread.~~

2. ~~On exterior stairways, risers constructed of grating containing openings of not more than ½ inch (12.7 mm) may be permitted.~~

~~1133B.4.5.3 Nosing. The radius of curvature at the leading edge (nosing) of the tread shall be no greater than ½ inch (12.7 mm). Beveling of nosings shall not exceed ½ inch (12.7 mm). Nosings shall not project more than 1¼ inches (31.8 mm) past the face of the riser below. Nosings that project beyond risers shall have the underside of the leading edge beveled at an angle not more than 30 degrees (0.52 rad) from the vertical (see Figure 11B-35(c). The transition from the nosing to the riser shall be free of abrupt edges. All projections shall be of uniform size, including nosings at landings.~~

~~Exceptions:~~

1. ~~In existing buildings there is no requirement to retroactively alter existing nosing projections of 1½ inches (38.1 mm) which were constructed in compliance with the building code in effect at the time of original construction.~~

2. ~~In existing buildings, when the enforcing agency determines that compliance with any requirement under this section would create an unreasonable hardship, an exception to persons with disabilities requirements may be granted when equivalent facilitation is provided.~~

3. ~~These regulations shall not apply to existing buildings when legal or physical constraints will not allow compliance with these regulations or equivalent facilitation without creating an unreasonable hardship. See Section 1.9.1.5.~~

~~1133B.5 Ramps.~~

~~1133B.5.1 General. Ramps shall conform to the provisions of this section. Any accessible route of travel shall be considered a ramp if its slope is greater than one unit vertical in 20 units horizontal (5 percent slope).~~

~~1133B.5.2 Width. Ramps shall have a minimum clear width of 48 inches (1219 mm), unless required to be wider by some other provision of this code. Ramps serving entrances to buildings where the ramp is the only exit discharge path and serves an occupant load of 300 or more shall have a minimum clear width of 60 inches (1524 mm). Ramps serving Group R occupancies may be 36 inches (914 mm) clear width when the occupant load is 50 or less.~~

~~1133B.5.3 Slope. The least possible slope shall be used for any ramp. The maximum slope of a ramp shall be one unit vertical in 12 unit's horizontal (8.33-percent slope). The maximum rise for any run shall be 30 inches (762 mm). Examples of ramp dimensions are as follows:~~

~~SLOPE~~	~~MAXIMUM RISE~~	~~MAXIMUM LENGTH~~
~~1:12~~	~~30 inches (762 mm)~~	~~30 feet (9144 mm)~~
~~1:13~~	~~30 inches (762 mm)~~	~~32.5 feet (9906 mm)~~
~~1:14~~	~~30 inches (762 mm)~~	~~35 feet (10668 mm)~~
~~1:15~~	~~30 inches (762 mm)~~	~~37.5 feet (11430 mm)~~
~~1:16~~	~~30 inches (762 mm)~~	~~40 feet (12192 mm)~~
~~1:17~~	~~30 inches (762 mm)~~	~~42.5 feet (12954 mm)~~
~~1:18~~	~~30 inches (762 mm)~~	~~45 feet (13716 mm)~~
~~1:19~~	~~30 inches (762 mm)~~	~~47.5 feet (14478 mm)~~

~~1133B.5.3.1 The cross slope of ramp surfaces shall be no greater than 1 unit vertical in 50 unit's horizontal (2-percent slope).~~

~~1133B.5.4 Landings. Level ramp landings shall be installed as follows:~~

~~*1133B.5.4.1 Location of landings. Level ramp landings shall be provided at the top and bottom of each ramp. Intermediate landings shall be provided at intervals not exceeding 30 inches (762 mm) of vertical rise and at each change of direction. Landings are not considered in determining the maximum horizontal distance of each ramp. Landings shall be level as specified in the definition of "level area" in Section 1102B.*~~

~~*1133B.5.4.2 Size of top and bottom landings. Top landings shall be not less than 60 inches (1524 mm) wide and shall have a length of not less than 60 inches (1524 mm) in the direction of ramp run. Landings at the bottom of ramps shall have a dimension in the direction of ramp run of not less than 72 inches (1829 mm).*~~

~~*1133B.5.4.3 Doors at ramp landings. Doors at ramp landings shall comply with the maneuvering clearance requirements of Section 1133B.2.4.2, and the requirements of Section 1133B.5.4.4.*~~

~~*1133B.5.4.4 Encroachment of doors at ramp landings. Doors in any position shall not reduce the minimum dimension of the ramp landing to less than 42 inches (1067 mm) and shall not reduce the required width by more than 3 inches (76 mm) when fully open. See Figure 11B-39(b).*~~

~~*1133B.5.4.5 Landing width. At bottom and intermediate landings, the width shall be at least the same as required for the ramps.*~~

~~*1133B.5.4.6 Change of direction. Intermediate and bottom landings at a change of direction shall have a dimension in the direction of ramp run of not less than 72 inches (1829 mm) to accommodate the handrail extension.*~~

~~*1133B.5.4.7 Other intermediate landings. Other intermediate landings shall have a dimension in the direction of ramp run of not less than 60 inches (1524 mm).*~~

~~*1133B.5.4.8 For existing ramps or ramps not covered by Section 1133B.5.4.1, landings shall be provided as set forth in Section 1133B.5.4.1.*~~

~~*1133B.5.4.9 Hazards. Required ramps shall have a curb at least 2 inches (51 mm) high, or a wheel guide rail 2 to 4 inches (51 to 102 mm) high on each side of the ramp landing that has a vertical drop exceeding 4 inches (102 mm) and that is not bounded by a wall or fence.*~~

~~*1133B.5.5 Handrails for ramps.*~~

~~*1133B.5.5.1 Handrails are required on ramps that provide access if slope exceeds one unit vertical in 20 units horizontal (5-percent slope). Handrails shall be placed on each side of each ramp, shall be continuous the full length of each ramp run, shall be 34 to 38 inches (864 to 965 mm) above the ramp surface to the top of the handrails, shall extend a minimum of 1 foot (305 mm) beyond the top and bottom of the ramp and shall be parallel with the floor or ground surface. The extensions of handrails shall be in the same direction of the ramp runs. The inside handrail on switchback or dogleg ramps shall always be continuous. Handrails may project into the required clear width a distance of 3-½ inches (89 mm) maximum from each side of a ramp at the handrail height. The ends of handrails shall be either rounded or returned smoothly to floor, wall or post. Handrails projecting from a wall shall have a space of 1-½ inches (38 mm) between the wall and the handrail. Handrails may be located in a recess if the recess is a maximum of 3 inches (76 mm) deep and extends at least 18 inches (457 mm) above the top of the rail. The grip portion shall not be less than 1-1/4 inches (32 mm) nor more than 1-½ inches (38 mm) in cross-sectional nominal dimension or the shape shall provide an equivalent gripping surface, and all surfaces shall be smooth with no sharp corners. Adjacent elements shall be positioned to provide unobstructed use of handrails at the specified locations. Handrails shall not rotate within their fittings. Any wall or other surface adjacent to the handrail shall be free of sharp or abrasive elements. Edges shall have a minimum radius of 1/8 inch (3 mm). See Figure 11B-27.*~~

~~*Exceptions:*~~

~~1. Handrails at ramps immediately adjacent to fixed seating in assembly areas are not required.~~

~~2. Curb ramps do not require handrails.~~

~~3. At door landings, handrails are not required on ramp runs less than 6 inches (152 mm) in rise or 72 inches (1829 mm) in length.~~

~~1133B.5.5.1.1 Ramp handrails. In existing buildings or facilities, where the extension of the handrail in the direction of the ramp run would create a hazard, the extension on the handrail may be turned 90 degrees to the run of the ramp.~~

~~1133B.5.6 . Guide curbs and wheel guide rails. Where the ramp surface is not bounded by a wall, guide curbs in compliance with Section 1133B.5.6.1 or wheel guide rails in compliance with Section 1133B.5.6.2, shall be provided.~~

~~Where handrails or guards are attached to the ramp surface with posts or similar elements, provide guide curbs in compliance with Section 1133B.5.6.1 or wheel guide rails in compliance with Section 1133B.5.6.2.~~

~~To prevent wheel entrapment, guide curbs or wheel guide rails shall provide a continuous and uninterrupted barrier along the length of the ramp.~~

~~1133B.5.6.1 A guide curb a minimum of 2 inches (51 mm) in height above the ramp surface.~~

~~1133B.5.6.2 A wheel guide rail centered 3 inches (76 mm) plus or minus 1 inch (25 mm) above the ramp surface.~~

~~1133B.5.7 Guards. Ramps more than 30 inches (762 mm) above the adjacent ground shall be provided with guards that comply with Section 1013. Such guards shall be continuous from the top of the ramp to the bottom of the ramp.~~

~~1133B.5.8 Outdoor ramps. Outdoor ramps and their approaches shall be designed so that water will not accumulate on walking surfaces.~~

~~1133B.6 Aisles.~~

~~1133B.6.1 General. Every portion of every building in which are installed seats, tables, merchandise, equipment or similar materials shall be provided with aisles leading to an exit.~~

~~1133B.6.2 Width. Every aisle shall not be less than 36 inches (914 mm) wide if serving only one side, and not less than 44 inches (1118 mm) wide if serving both sides. In addition, aisles shall comply with Figure 11B-5E(a) and (b) for circulation around obstructions.~~

~~1133B.7 Walks and Sidewalks.~~

~~1133B.7.1 Continuous surface. Walks and sidewalks subject to these regulations shall have a continuous common surface, not interrupted by steps or by abrupt changes in level exceeding ½ inch (12.7 mm) (see Section 1133B.7.4), and shall be a minimum of 48 inches (1219 mm) in width. If a walk or sidewalk has less than 60 inch (1525 mm) clear width, then passing spaces at least 60 inches by 60 inches (1525 mm by 1525 mm) shall be located at reasonable intervals not to exceed 200 feet (61 m). A T-intersection is an acceptable passing place. Surfaces shall be slip-resistant as follows:~~

~~Exception: When, because of right-of-way restrictions, natural barriers or other existing conditions, the enforcing agency determines that compliance with the 48-inch (1219 mm) clear sidewalk width would create an unreasonable hardship, the clear width may be reduced to 36 inches (914 mm).~~

~~1133B.7.1.1 Slopes less than 6 percent. Surfaces with a slope of less than 6-percent slope shall be at~~

~~*least as slip-resistant as that described as a medium salted finish.*~~

~~*1133B.7.1.2 Slopes 6 percent or greater. Surfaces with a slope of 6-percent slope shall be slip-resistant.*~~

~~*1133B.7.1.3 Surface cross slopes. Surface cross slopes shall not exceed one unit vertical in 50 unit's horizontal (2-percent slope).*~~

~~*1133B.7.2 Gratings. Walks, sidewalks and pedestrian ways shall be free of gratings whenever possible. For gratings located in the surface of any of these areas, grid openings in gratings shall be limited to ½ inch (12.7 mm) in the direction of traffic flow.*~~

~~*Exceptions:*~~

1. ~~*Where the enforcing agency determines that compliance with this section would create an unreasonable hardship, an exception may be granted when equivalent facilitation is provided.*~~

2. ~~*This section shall not apply in those conditions where, due to legal or physical constraints, the site of the project will not allow compliance with these building standards or equivalent facilitation without creating an unreasonable hardship. See Section 109.1.5 1.9.1.5.*~~

~~*1133B.7.3 Five percent gradient. When the slope in the direction of travel of any walk exceeds 1 unit vertical in 20 units horizontal (5-percent slope), it shall comply with the provisions of Section 1133B.5.*~~

~~*1133B.7.4 Changes in level. Changes in level shall comply with Section 1124B.2.*~~

~~*1133B.7.5 Level areas. All walks with continuous gradients shall have level areas at least 5 feet (1524 mm) in length at intervals of 400 feet (121 920 mm) maximum.*~~

~~*1133B.8 Hazards.*~~

~~*1133B.8.1 Warning curbs. Abrupt changes in level, except between a walk or sidewalk and an adjacent street or driveway, exceeding 4 inches (102 mm) in a vertical dimension, such as at planters or fountains located in or adjacent to walks, sidewalks or other pedestrian ways, shall be identified by curbs projecting at least 6 inches (152 mm) in height above the walk or sidewalk surface to warn the blind of a potential drop off.*~~

~~*When a guard or handrail is provided, no curb is required when a guide rail is provided centered 3 inches (76 mm) plus or minus 1 inch (25 mm) above the surface of the walk or sidewalk, the walk is 5 percent or less gradient or no adjacent hazard exists.*~~

~~*1133B.8.2 Overhanging obstructions. Any obstruction that overhangs a pedestrian's way shall be a minimum of 80 inches (2032 mm) above the walking surface as measured from the bottom of the obstruction. Where a guy support is used parallel to a path of travel, including, but not limited to sidewalks, a guy brace, sidewalk guy or similar device shall be used to prevent an overhanging obstruction as defined (see Figure 11B-28).*~~

~~*Hazards such as drop-offs adjacent to walk ways or overhanging obstructions can be dangerous to persons with sight problems. This section addresses these situations.*~~

~~*1133B.8.3 Detectable warnings at transit boarding platforms. See Section 1121B.3.1, Item 8(a).*~~

~~*1133B.8.4 Detectable directional texture at boarding platforms. See Section 1121B.3.1, Item 8(b).*~~

~~*1133B.8.5 Detectable warnings at hazardous vehicular areas. If a walk crosses or adjoins a vehicular way, and the walking surfaces are not separated by curbs, railings or other elements between the pedestrian areas and vehicular areas, the boundary between the areas shall be defined by a continuous detectable warning which is 36 inches (914 mm) wide, complying with Section 1121B.3.1 Item 8(a).*~~

~~*Only approved DSA-AC detectable warning products and directional surfaces shall be installed as provided in the California Code of Regulations (CCR), Title 24, Part 1, Articles 2, 3 and 4. Refer to CCR Title 24, Part 12, Chapter 12-11A and B, for building and facility access specifications for product approval for detectable warning products and directional surfaces.*~~

~~*Detectable warning products and directional surfaces installed after January 1, 2001, shall be evaluated by an independent entity, selected by the Department of General Services, Division of the State Architect-Access Compliance, for all occupancies, including transportation and other outdoor environments, except that when products and surfaces are for use in residential housing evaluation shall be in consultation with the Department of Housing and Community Development. See Government Code Section 4460.*~~

~~*1133B.8.6 Protruding objects.*~~

~~*1133B.8.6.1 General. Objects projecting from walls (for example, telephones) with their leading edges between 27 inches (686 mm) and 80 inches (2032 mm) above the finished floor shall protrude no more than 4 inches (102 mm) into walks, halls, corridors, passageways or aisles. Objects mounted with their leading edges at or below 27 inches (686 mm) above the finished floor may protrude any amount. Free-standing objects mounted on posts or pylons may overhang 12 inches (305 mm) maximum from 27 inches (686 mm) to 80 inches (2032 mm) above the ground or finished floor. Protruding objects shall not reduce the clear width of an accessible route or maneuvering space. See Figure 11B-7A.*~~

~~*1133B.8.6.2 Head room. Walks, halls, corridors, passageways, aisles or other circulation spaces shall have 80 inches (2032 mm) minimum clear head room. If vertical clearance of an area adjoining an accessible route is reduced to less than 80 inches (nominal dimension), a barrier to warn blind or visually-impaired persons shall be provided. See Figures 11B-7A and 11B-7C.*~~

~~*1133B.8.6.3 Free-standing signs. Wherever signs mounted on posts or pylons protrude from the posts or pylons and the bottom edge of the sign is at less than 80 inches (2032 mm) above the finished floor or ground level, the edges of such signs shall be rounded or eased and the corners shall have a minimum radius of 0.125 inches.*~~

~~*1133B.8.7 Detectable warnings at reflecting pools. The edges of reflecting pools shall be protected by railings, walls, warning curbs or detectable warnings complying with Section 1121B.3.1, Item 8(a).*~~

~~***Division IV – ACCESSIBILITY FOR EXISTING BUILDINGS***~~

~~***SECTION 1134B***~~
~~***ACCESSIBILITY FOR EXISTING BUILDINGS***~~

~~*1134B.1 Scope. The provisions of this division apply to renovation, structural repair, alteration and additions to existing buildings, including those identified as historic buildings. This division identifies minimum standards for removing architectural barriers, and providing and maintaining accessibility to existing buildings and their related facilities.*~~

~~*No renovation, structural repair, alteration or addition shall be undertaken which decreases or has the effect of decreasing accessibility or usability of a building or facility below the requirements for new construction at the time of renovation, structural repair, alteration or addition.*~~

~~*1134B.2 General. When alterations, structural repairs or additions are made to existing buildings or facilities, they shall comply with all provisions of Division I, New Buildings, except as modified by this division. These requirements shall apply only to the area of specific alteration, structural repair or addition and shall include those areas listed below:*~~

~~*1134B.2.1 A primary entrance to the building or facility and the primary path of travel to the specific area of alteration, structural repair or addition, and sanitary facilities, drinking fountains, signs and public telephones serving the area.*~~

~~*Exceptions:*~~

1. ~~When the total construction cost of alterations, structural repairs or additions does not exceed a valuation threshold of $50,000, based on January 1981, "ENR US20 Cities" Average construction cost index of 3372.02 (Engineering News Record, McGraw Hill Publishing Company), and the enforcing agency finds that compliance with this code creates an unreasonable hardship, compliance shall be limited to the actual work of the project. The enforcing agency shall annually update the valuation threshold to a current amount based on the increase in the index since the last figure used. (For example, the January 2011 amount is $132,536.28) For purposes of this exception, an unreasonable hardship exists where the cost of providing an accessible entrance, path of travel, sanitary facilities, public phones and drinking fountains, is disproportionate to the cost of the project; that is, where it exceeds 20 percent of the cost of the project without these features. Where the cost of alterations necessary to make these features fully accessible is disproportionate, access shall be provided to the extent that it can be without incurring disproportionate cost. In choosing which accessible elements to provide, priority should be given to those elements that will provide the greatest access in the following order:~~

   ~~1.1. An accessible entrance,~~

   ~~1.2. An accessible route to the altered area,~~

   ~~1.3. At least one accessible restroom for each sex,~~

   ~~1.4. Accessible telephones,~~

   ~~1.5. Accessible drinking fountains, and~~

   ~~1.6. When possible, additional accessible elements such as parking, storage and alarms.~~

   ~~The obligation to provide access may not be evaded by performing a series of small alterations to the area served by a single path of travel if those alterations could have been performed as a single undertaking. If an area has been altered without providing an accessible path of travel to that area, and subsequent alterations of that area or a different area on the same path of travel are undertaken within three years of the original alteration, the total cost of alterations to the areas on that path of travel during the preceding three-year period shall be considered in determining whether the cost of making that path of travel accessible is disproportionate. Only alterations undertaken after January 26, 1992, shall be considered in determining if the cost of providing an accessible path of travel is disproportionate to the overall cost of the alterations.~~

2. ~~Certain types of privately funded, multistory buildings and facilities were formerly exempt from accessibility requirements above and below the first floor under this code, but as of the effective date of this regulation are no longer exempt due to more restrictive provisions in the federal Americans with Disabilities Act. In alteration projects involving buildings and facilities previously approved and built without elevators, areas above and below the ground floor are subject to the 20 percent disproportionality provisions described in Exception 1, above, even if the value of the project exceeds the valuation threshold in Exception 1. The types of buildings and facilities are:~~

   ~~2.1. Office buildings and passenger vehicle service stations of three stories or more and 3,000 or more square feet (279m^2) per floor.~~

   ~~2.2. Offices of physicians and surgeons.~~

   ~~2.3. Shopping centers.~~

   ~~2.4. Other buildings and facilities three stories or more and 3,000 or more square feet (279 m^2) per floor if a reasonable portion of services sought and used by the public is available on the accessible level.~~

~~*For the general privately funded multistory building exception applicable to new construction and alterations, see Section 1103B.1, Exception 2.*~~

~~*The elevator exception set forth in this section does not obviate or limit in any way the obligation to comply with the other accessibility requirements in this code. For example, floors above or below the accessible ground floor must meet the requirements of this section except for elevator service. If toilet or bathing facilities are provided on a level not served by an elevator, then toilet or bathing facilities must be provided on the accessible ground floor.*~~

~~*3. Alterations, structural repairs or additions consisting of one or more of the following shall be limited to the actual work of the project:*~~

~~*3.1. Altering one building entrance to meet accessibility requirements.*~~

~~*3.2. Altering one existing toilet facility to meet accessibility requirements.*~~

~~*3.3. Altering existing elevators to meet accessibility requirements.*~~

~~*3.4. Altering existing steps to meet accessibility requirements.*~~

~~*3.5. Altering existing handrails to meet accessibility requirements.*~~

~~*3.6. Alteration solely for the purpose of removing barriers barrier removal undertaken pursuant to the requirements of Sections 36.402 and 36.404 through 36.406 of Title III of the Department of Justice regulations promulgated pursuant to the Americans with Disabilities Act (Public Law 101-336, 28 C.F.R., Section 36.304 Section 36.402, 28 C.F.R. Section 36.404, 28 C.F.R. Section 36.405, and 28 C.F.R. 36.406) or the accessibility requirements of this code as those requirements or regulations now exist or are hereafter amended, including the following:*~~

~~*3.6.1. Installing ramps.*~~

~~*3.6.2. Making curb cuts in sidewalks and entrance.*~~

~~*3.6.3. Repositioning shelves.*~~

~~*3.6.4. Rearranging tables, chairs, vending machines, display racks, and other furniture.*~~

~~*3.6.5. Repositioning telephones.*~~

~~*3.6.6. Adding raised markings on elevator control buttons.*~~

~~*3.6.7. Installing flashing alarm lights.*~~

~~*3.6.8. Widening doors.*~~

~~*3.6.9. Installing offset hinges to widen doorways.*~~

~~*3.6.10. Eliminating a turnstile or providing an alternative accessible path.*~~

~~*3.6.11. Installing accessible door hardware.*~~

~~*3.6.12. Installing grab bars in toilet stalls.*~~

~~*3.6.13. Rearranging toilet partitions to increase maneuvering space.*~~

~~*3.6.14. Insulating lavatory pipes under sinks to prevent burns.*~~

~~3.6.15. Installing a raised toilet seat.~~

~~3.6.16. Installing a full-length bathroom mirror.~~

~~3.6.17. Repositioning the paper towel dispenser in a bathroom.~~

~~3.6.18. Creating designated accessible parking spaces.~~

~~3.6.19. Installing an accessible paper cup dispenser at an existing inaccessible water fountain.~~

~~3.6.20. Removing high-pile, low-density carpeting.~~

~~3.6.21. Installing vehicle hand controls.~~

~~3.7. Altering existing parking lots by resurfacing and/or restriping.~~

~~4. Projects which consist only of heating, ventilation, air conditioning, reroofing, electrical work not involving placement of switches and receptacles, cosmetic work that does not affect items regulated by this code, such as painting, equipment not considered to be a part of the architecture of the building or area, such as computer terminals, office equipment, etc., are not considered alteration projects for the purposes of accessibility for persons with disabilities and shall not be subject to this code unless they affect the usability of the building or facility. For the purposes of this section, the term "construction cost" does not include building permit fees or discretionary permit fees.~~

~~The only purpose of this exception is to exclude projects from activating the provisions of this section. The exceptions are not intended to relieve projects from complying with other applicable provisions of this code (e.g., replacement of carpet does not activate the provisions of this section; however, it still must comply with Section 1124B.3).~~

~~5 If an element listed in Section 1134B.2.1, Exception 5, Items 5.1 through 5.5 has been constructed or altered in accordance with the accessibility requirements in either the 2007 or 2010 California Building Code, retrofit of that element to reflect the incremental changes in the August 1, 2012 Emergency Supplement to the 2010 California Building Code shall not be required solely because of an alteration to an area served by the element.~~

~~5.1 Accessible water closet – distance to adjacent wall or partition.~~

~~5.2 Accessible water closet – encroachment of the adjacent fixture at the rear wall into the required clear floor space at the wide side of an accessible water closet.~~

~~5.3 Toilet tissue dispenser – distance in front of water closet.~~

~~5.4 Drinking fountain spout outlet (bubbler outlet) – distance from front edge of the fountain.~~

~~5.5 Drinking fountain spout – angle of water stream.~~

~~1134B.2.2 Where it is technically infeasible in the area of an alteration to make existing toilet facilities code compliant and to install separate toilet facilities for each sex, then the installation of at least one unisex toilet facility per floor being altered, located in the same area as existing toilet facilities, will be permitted. Such a facility shall meet the requirements of Section 1115B.3.2.~~

~~1134B.2.3 If alterations of single elements, when considered together, amount to an alteration of a room or space in a building or facility, the entire room or space shall be made accessible.~~

~~*SECTION 1135B*~~
~~*HISTORIC PRESERVATION – SPECIAL STANDARDS OF ACCESSIBILITY FOR BUILDINGS WITH HISTORICAL SIGNIFICANCE*~~

~~*1135B.1 General. Qualified historical buildings shall comply with the State Historical Building Code, Part 8, Title 24, of the California Code of Regulations.*~~

~~FIGURE 11B-1A~~

~~FIGURE 11B-1B MULTIPLE-ACCOMMODATION TOILET FACILITY~~

~~FIGURE 11B-1C CLEARANCES FOR GRAB BARS~~

~~FIGURE 11B-1D KNEE CLEARANCE~~

~~FIGURE 11B-1E CLEARANCES AT WATER CLOSETS~~

~~FIGURE 11B-2A SHOWER STALLS~~

~~FIGURE 11B-2B SHOWER STALLS (continued)~~

~~FIGURE 11B-2C SHOWER STALLS (continued)~~

~~FIGURE 11B-2D SHOWER SEAT~~

~~FIGURE 11B-3A DRINKING FOUNTAINS~~

~~FIGURE 11B-3B DRINKING FOUNTAINS-continued~~

~~FIGURE 11B-4 MOUNTING HEIGHTS AND CLEARANCES FOR TELEPHONES~~

~~FIGURE 11B-5A MINIMUM CLEAR FLOOR SPACE FOR WHEELCHAIRS~~

~~FIGURE 11B-5B DOOR WIDTH~~

~~FIGURE 11B-C FORWARD REACH~~

~~FIGURE 11B-D SIDE REACH~~

~~FIGURE 11B-E WIDTH OF ACCESSIBLE ROUTE~~

~~FIGURE 11B-5F ATM REACH RANGE LIMITS~~

~~FIGURE 11B-6 INTERNATIONAL ACCESSIBILITY SYMBOL~~

~~FIGURE 11B-7A PROTRUDING OBJECTS~~

~~FIGURE 11B-7B OBJECTS MOUNTED ON POSTS OR PYLONS~~

~~FIGURE 11-7C OVERHANGING AND OVERHEAD HAZARDS~~

~~FIGURE 11B-7D PROTECTION AROUND WALL-MOUNTED OBJECTS~~

~~FIGURE 11B-7E~~

~~FIGURE 11B-8 CLEAR FLOOR SPACE AT BATHTUBS~~

~~FIGURE 11B-9 GRAB BARS AT BATHTUBS~~

~~FIGURE 11B-10 MINIMUM CLEAR WIDTH FOR SINGLE WHEELCHAIR~~

~~FIGURE 11B-11 MINIMUM CLEAR WIDTH FOR TWO WHEELCHAIRS~~

~~FIGURE 11B-12 WHEELCHAIR TURNING SPACE~~

~~FIGURE 11B-13 MINIMUM CLEARANCES FOR SEATING AND TABLE~~

~~FIGURE 11B-14A INTERNATIONAL TTY SYMBOL~~

~~FIGURE 11B-14B VOLUME CONTROL TELEPHONES~~

~~FIGURE 11B-14C INTERNATIONAL SYMBOL OF ACCESS FOR HEARING LOSS~~

~~FIGURE 11B-15 SPACE REQUIREMENTS FOR WHEELCHAIR SEATING~~

~~FIGURE 11B-16 FOOD SERVICE LINES~~

~~FIGURE 11B-17 TABLEWARE AREAS~~

~~FIGURE 11B-18A DOUBLE PARKING STALLS~~

~~FIGURE 11B-18B SINGLE PARKING STALLS~~

~~FIGURE 11B-18C DIAGONAL PARKING STALLS~~

~~FIGURE 11B-19A CURB DETAILS~~

~~DIGURE 11B-19B CURB DETAIL~~

~~FIGURE 11B-19C CURB DETAIL~~

~~FIGURE 11B-20A CURB DETAIL-CASES A AND B~~

~~FIGURE 11B-20B-CURB DETAIL-CASES C AND D~~

~~FIGURE 11B-20C CURB DETAIL-CASES E AND F~~

~~FIGURE 11B-20D CURB DETAIL-CASES G AND H~~

~~FIGURE 11B-20E CURB SECTIONS~~

~~FIGURE 11B-21 RETURNED CURB STYLE~~

~~FIGURE 11B-22 CURB RAMPS AT MARKED CROSSING~~

~~FIGURE 11B-23A TRUNCATED DOMES~~

~~FIGURE 11B-23B DIRECTIONAL BARS~~

~~FIGURE 11B-24 ACCESS AISLE AT PASSENGER LOADING ZONES~~

~~FIGURE 11B-25 OBSTRUCTIONS~~

~~FIGURE 11B-26A LEVEL MANEUVERING CLEARANCE AT DOORS~~

~~FIGURE 11B-26B LEVEL MANEUVERING CLEARANCE AT DOORS (continued)~~

~~FIGURE 11B-26C LEVEL MANEUVERING CLEARANCE AT DOORS (continued)~~

~~FIGURE 11B-27 RAMPS AND SIDEWALKS~~

~~FIGURE 11B-28 OVERHANGING OBSTRUCTION~~

~~FIGURE 11B-29 DOOR CONSTRUCTION~~

~~FIGURE 11B-30 VESTIBULE~~

~~FIGURE 11B-31 VESTIBULE (SERVING OTHER THAN REQUIRED EXIT STAIRWAY)~~

~~FIGURE 11B-32 THRESHOLDS~~

~~FIGURE 11B-33 CLEAR DOOR WIDTH AND DEPTH~~

~~FIGURE 11B-34 CORRIDOR OVER 200 FEET~~

~~FIGURE 11B-35 WARNING STRIPING AND HANDRAIL EXTENSIONS~~

~~FIGURE 11B-36 STAIR HANDRAILS~~

~~FIGURE 11B-37 STAIR HANDRAILS~~

~~FIGURE 11B-38 RAMP DIMENSIONS~~

~~FIGURE 11B-39 RAMP LANDING AND DOORWAY~~

~~FIGURE 11B-40 CLEANER AIR SYMBOL~~

~~FIGURE 11B-40A MINIMUM DIMENSIONS OF ELEVATOR CARS~~

~~FIGURE 11B-40B ELEVATOR CONTROL PANEL~~

~~FIGURE 11B-40C HOISTWAY AND ELEVATOR ENTRANCES~~

~~FIGURE 11B-40D GRAPH OF TIMING EQUATION~~

~~FIGURE 11B-41 NUMERIC KEY LAYOUT~~

Notation
Authority: Government Code Section 4450. Reference(s): Government Code Section(s) 4450 through 4461, and 12955.1(c) and Health and Safety Code Section(s) 18949.1, 19952 through 19959.

CHAPTER 11B

ACCESSIBILITY TO PUBLIC BUILDINGS, PUBLIC ACCOMMODATIONS, COMMERCIAL BUILDINGS AND PUBLIC HOUSING

~~ADA CHAPTER~~ *DIVISION* 1: APPLICATION AND ADMINISTRATION

*11B-*101 Purpose

***11B-*101.1 General.** This ~~document~~ *chapter* contains scoping and technical requirements for accessibility to sites, facilities, buildings, and elements by individuals with disabilities. The requirements are to be applied during the design, construction, additions to, and alteration of sites, facilities, buildings, and elements to the extent required by *Chapter 1, Section 1.9.* ~~regulations issued by Federal agencies under the Americans with Disabilities Act of 1990 (ADA).~~

11B-*101.2 *Reserved. ~~**Effect on Removal of Barriers in Existing Facilities.** This document does not address existing facilities unless altered at the discretion of a covered entity. The Department of Justice has authority over existing facilities that are subject to the requirement for removal of barriers under title III of the ADA. Any determination that this document applies to existing facilities subject to the barrier removal requirement is solely within the discretion of the Department of Justice and is effective only to the extent required by regulations issued by the Department of Justice.~~

*11B-*102 Dimensions for Adults and Children

The technical requirements are based on adult dimensions and anthropometrics. In addition, this ~~document~~ *chapter* includes technical requirements based on children's dimensions and anthropometrics for drinking fountains, water closets, toilet compartments, lavatories and sinks, dining surfaces, and work surfaces.

*11B-*103 Equivalent Facilitation

Nothing in these requirements prevents the use of designs, products, or technologies as alternatives to those prescribed, provided they result in substantially equivalent or greater accessibility and usability.

*11B-*104 Conventions

***11B-*104.1 Dimensions.** Dimensions that are not stated as "maximum" or "minimum" are absolute.

> ***11B-*104.1.1 Construction and Manufacturing Tolerances.** All dimensions are subject to conventional industry tolerances except where the requirement is stated as a range with specific minimum and maximum end points.

***11B-*104.2 Calculation of Percentages.** Where the required number of elements or facilities to be provided is determined by calculations of ratios or percentages and remainders or fractions result, the next greater whole number of such elements or facilities shall be provided. Where the determination of the required size or dimension of an element or facility involves ratios or percentages, rounding down for values less than one half shall be permitted.

***11B-*104.3 Figures.** Unless specifically stated otherwise, figures are provided for informational purposes only.

Convention	Description
36 914	dimension showing English units (in inches unless otherwise specified) above the line and SI units (in millimeters unless otherwise specified) below the line
6 152	dimension for small measurements
33-36 838-914	dimension showing a range with minimum - maximum
min	minimum
max	maximum
>	greater than
≥	greater than or equal to
<	less than
≤	less than or equal to
	boundary of clear floor space or maneuvering clearance
℄	centerline
	a permitted element or its extension
	direction of travel or approach
	a wall, floor, ceiling or other element cut in section or plan
	a highlighted element in elevation or plan
	location zone of element, control or feature

Figure *11B*-104
Graphic Convention for Figures

***11B*-105 Referenced Standards**

***11B*-105.1 General.** *See Chapter 35.* ~~The standards listed in *11B*-105.2 are incorporated by reference in this document and are part of the requirements to the prescribed extent of each such reference. The Director of the Federal Register has approved these standards for incorporation by reference in accordance with 5 U.S.C. 552(a) and 1 CFR part 51. Copies of the referenced standards may be inspected at the Architectural and Transportation Barriers Compliance Board, 1331 F Street, NW, Suite 1000, Washington, DC 20004; at the Department of Justice, Civil Rights Division, Disability Rights~~

~~Section, 1425 New York Avenue, NW, Washington, DC; at the Department of Transportation, 400 Seventh Street, SW, Room 10424, Washington DC; or at the National Archives and Records Administration (NARA). For information on the availability of this material at NARA, call (202) 741-6030, or go to http://www.archives.gov/federal_register/code_of_federal_regulations/ibr_locations.html.~~

~~**105.2 Referenced Standards.** The specific edition of the standards listed below are referenced in this document. Where differences occur between this document and the referenced standards, this document applies.~~

~~**105.2.1 ANSI/BHMA.** Copies of the referenced standards may be obtained from the Builders Hardware Manufacturers Association, 355 Lexington Avenue, 17th floor, New York, NY 10017 (http://www.buildershardware.com).~~

~~ANSI/BHMA A156.10-1999 American National Standard for Power Operated Pedestrian Doors (see 404.3).~~

~~ANSI/BHMA A156.19-1997 American National Standard for Power Assist and Low Energy Power Operated Doors (see 404.3, 408.3.2.1, and 409.3.1).~~

~~ANSI/BHMA A156.19-2002 American National Standard for Power Assist and Low Energy Power Operated Doors (see 404.3, 408.3.2.1, and 409.3.1).~~

~~**105.2.2 ASME.** Copies of the referenced standards may be obtained from the American Society of Mechanical Engineers, Three Park Avenue, New York, New York 10016 (http://www.asme.org).~~

~~ASME A17.1- 2000 Safety Code for Elevators and Escalators, including ASME A17.1a-2002 Addenda and ASME A17.1b-2003 Addenda (see 407.1, 408.1, 409.1, and 810.9).~~

~~ASME A18.1-1999 Safety Standard for Platform Lifts and Stairway Chairlifts, including ASME A18.1a-2001 Addenda and ASME A18.1b-2001 Addenda (see 410.1).~~

~~ASME A18.1-2003 Safety Standard for Platform Lifts and Stairway Chairlifts, (see 410.1).~~

~~**105.2.3 ASTM.** Copies of the referenced standards may be obtained from the American Society for Testing and Materials, 100 Bar Harbor Drive, West Conshohocken, Pennsylvania 19428 (http://www.astm.org).~~

~~ASTM F 1292-99 Standard Specification for Impact Attenuation of Surface Systems Under and Around Playground Equipment (see 1008.2.6.2).~~

~~ASTM F 1292-04 Standard Specification for Impact Attenuation of Surfacing Materials Within the Use Zone of Playground Equipment (see 1008.2.6.2).~~

~~ASTM F 1487-01 Standard Consumer Safety Performance Specification for Playground Equipment for Public Use (see 106.5).~~

~~ASTM F 1951-99 Standard Specification for Determination of Accessibility of Surface Systems Under and Around Playground Equipment (see 1008.2.6.1).~~

~~**105.2.4 ICC/IBC.** Copies of the referenced standard may be obtained from the International Code Council, 5203 Leesburg Pike, Suite 600, Falls Church, Virginia 22041 (www.iccsafe.org).~~

~~International Building Code, 2000 Edition (see 207.1, 207.2, 216.4.2, 216.4.3, and 1005.2.1).~~

~~International Building Code, 2001 Supplement (see 207.1 and 207.2).~~

~~International Building Code, 2003 Edition (see 207.1, 207.2, 216.4.2, 216.4.3, and 1005.2.1).~~

~~**105.2.5 NFPA.** Copies of the referenced standards may be obtained from the National Fire Protection Association, 1 Batterymarch Park, Quincy, Massachusetts 02169-7471, (http://www.nfpa.org).~~

~~NFPA 72 National Fire Alarm Code, 1999 Edition (see 702.1 and 809.5.2).~~

~~NFPA 72 National Fire Alarm Code, 2002 Edition (see 702.1 and 809.5.2).~~

***11B*-106 Definitions**

***11B*-106.1 General.** For the purpose of this ~~document~~ *chapter*, the terms *listed* ~~defined~~ in *11B*-106.5 *and defined in Chapter 2* have the indicated meaning.

***11B*-106.2 Terms Defined in Referenced Standards.** Terms not *listed* ~~defined~~ in *11B*-106.5 *and not defined in Chapter 2, Section 202,* ~~or in regulations issued by the Department of Justice and the Department of Transportation to implement the Americans with Disabilities Act,~~ but specifically defined in a referenced standard, shall have the specified meaning from the referenced standard unless otherwise stated.

***11B*-106.3 Undefined Terms.** The meaning of terms not specifically *listed* ~~defined~~ in *11B*-106.5*, and not defined in Chapter 2, Section 202,* ~~or in regulations issued by the Department of Justice and the Department of Transportation to implement the Americans with Disabilities Act~~ or in referenced standards shall be as defined by collegiate dictionaries in the sense that the context implies.

***11B*-106.4 Interchangeability.** ~~Words, terms and phrases used in the singular include the plural and those used in the plural include the singular~~ *See Chapter 2, Section 201.2.*

***11B*-106.5 Defined Terms.** *The following terms are defined in Chapter 2, Section 202.*

Access Aisle.

Accessibility.

Accessible. ~~A site, building, facility, or portion thereof that complies with this part.~~

Accessible Element.

Accessible Means of Egress. ~~A continuous and unobstructed way of egress travel from any point in a building or facility that provides an accessible route to an area of refuge, a horizontal exit, or a public way.~~

Accessible Route.

Accessible Space.

Adaptable.

Addition. ~~An expansion, extension, or increase in the gross floor area or height of a building or facility.~~

Administrative Authority. ~~A governmental agency that adopts or enforces regulations and guidelines for the design, construction, or alteration of buildings and facilities.~~

Aisle.

Alteration. ~~A change to a building or facility that affects or could affect the usability of the building or facility or portion thereof. Alterations include, but are not limited to, remodeling, renovation, rehabilitation, reconstruction, historic restoration, resurfacing of circulation paths or vehicular ways,~~

~~changes or rearrangement of the structural parts or elements, and changes or rearrangement in the plan configuration of walls and full-height partitions. Normal maintenance, reroofing, painting or wallpapering, or changes to mechanical and electrical systems are not alterations unless they affect the usability of the building or facility.~~

Amusement Attraction. ~~Any facility, or portion of a facility, located within an amusement park or theme park which provides amusement without the use of an amusement device. Amusement attractions include, but are not limited to, fun houses, barrels, and other attractions without seats.~~

Amusement Ride. ~~A system that moves persons through a fixed course within a defined area for the purpose of amusement.~~

Amusement Ride Seat. ~~A seat that is built-in or mechanically fastened to an amusement ride intended to be occupied by one or more passengers.~~

ANSI.

Approved.

Approved Testing Agency.

Area of Refuge.

Area of Sport Activity. ~~That portion of a room or space where the play or practice of a sport occurs.~~

Assembly Area. ~~A building or facility, or portion thereof, used for the purpose of entertainment, educational or civic gatherings, or similar purposes. For the purposes of these requirements, assembly areas include, but are not limited to, classrooms, lecture halls, courtrooms, public meeting rooms, public hearing rooms, legislative chambers, motion picture houses, auditoria, theaters, playhouses, dinner theaters, concert halls, centers for the performing arts, amphitheaters, arenas, stadiums, grandstands, or convention centers.~~

Assistive Listening System (ALS). ~~An amplification system utilizing transmitters, receivers, and coupling devices to bypass the acoustical space between a sound source and a listener by means of induction loop, radio frequency, infrared, or direct wired equipment.~~

Automatic Door.

Automatic Teller Machine (ATM).

Bathroom.

Blended Transition.

Boarding Pier. ~~A portion of a pier where a boat is temporarily secured for the purpose of embarking or disembarking.~~

Boat Launch Ramp. ~~A sloped surface designed for launching and retrieving trailered boats and other water craft to and from a body of water.~~

Boat Slip. ~~That portion of a pier, main pier, finger pier, or float where a boat is moored for the purpose of berthing, embarking, or disembarking.~~

Building. ~~Any structure used or intended for supporting or sheltering any use or occupancy.~~

Building Official.

Catch Pool. ~~A pool or designated section of a pool used as a terminus for water slide flumes.~~

CCR.

Characters. ~~Letters, numbers, punctuation marks and typographic symbols.~~

Children's Use. ~~Describes spaces and elements specifically designed for use primarily by people 12 years old and younger.~~

Circulation Path. ~~An exterior or interior way of passage provided for pedestrian travel, including but not limited to, walks, hallways, courtyards, elevators, platform lifts, ramps, stairways, and landings.~~

Clear.

Clear Floor Space.

Closed-Circuit Telephone. ~~A telephone with a dedicated line such as a house phone, courtesy phone or phone that must be used to gain entry to a facility.~~

Commercial Facilities.

Common Use. ~~Interior or exterior circulation paths, rooms, spaces, or elements that are not for public use and are made available for the shared use of two or more people.~~

Comply With.

Cross Slope. ~~The slope that is perpendicular to the direction of travel (see running slope).~~

Curb Cut.

Curb Ramp. ~~A short ramp cutting through a curb or built up to it.~~

Detectable Warning. ~~A standardized surface feature built in or applied to walking surfaces or other elements to warn of hazards on a circulation path.~~

Directional Sign.

Disability.

Dormitory.

Element. ~~An architectural or mechanical component of a building, facility, space, or site.~~

Elevated Play Component. ~~A play component that is approached above or below grade and that is part of a composite play structure consisting of two or more play components attached or functionally linked to create an integrated unit providing more than one play activity.~~

Elevator, Passenger.

Employee Work Area. ~~All or any portion of a space used only by employees and used only for work. Corridors, toilet rooms, kitchenettes and break rooms are not employee work areas.~~

Enforcing Agency.

Entrance. ~~Any access point to a building or portion of a building or facility used for the purpose of entering. An entrance includes the approach walk, the vertical access leading to the entrance platform, the entrance platform itself, vestibule if provided, the entry door or gate, and the hardware of~~

~~the entry door or gate.~~

Equivalent Facilitation.

Existing Building or Facility.

Exit.

Facility. ~~All or any portion of buildings, structures, site improvements, elements, and pedestrian routes or vehicular ways located on a site.~~

Functional Area.

Gangway. ~~A variable-sloped pedestrian walkway that links a fixed structure or land with a floating structure. Gangways that connect to vessels are not addressed by this document.~~

Golf Car Passage. ~~A continuous passage on which a motorized golf car can operate.~~

Grab Bar.

Grade (Adjacent Ground Elevation).

Grade Break.

Ground Floor.

Ground Level Play Component. ~~A play component that is approached and exited at the ground level.~~

Guard.

Handrail.

Health Care Provider.

Historical Buildings.

Housing at a Place of Education.

If, If . . . Then.

International Symbol of Accessibility.

Key Station. ~~Rapid and light rail stations, and commuter rail stations, as defined under criteria established by the Department of Transportation in 49 CFR 37.47 and 49 CFR 37.51, respectively.~~

Kick Plate.

Kitchen or Kitchenette.

Lavatory.

Mail Boxes. ~~Receptacles for the receipt of documents, packages, or other deliverable matter. Mail boxes include, but are not limited to, post office boxes and receptacles provided by commercial mail-receiving agencies, apartment facilities, or schools.~~

Marked Crossing. ~~A crosswalk or other identified path intended for pedestrian use in crossing a~~

~~vehicular way.~~

May.

Mezzanine. ~~An intermediate level or levels between the floor and ceiling of any story with an aggregate floor area of not more than one-third of the area of the room or space in which the level or levels are located. Mezzanines have sufficient elevation that space for human occupancy can be provided on the floor below.~~

NFPA.

Nosing.

Occupant Load. ~~The number of persons for which the means of egress of a building or portion of a building is designed.~~

Occupiable Space.

Open Riser.

Operable Part. ~~A component of an element used to insert or withdraw objects, or to activate, deactivate, or adjust the element.~~

Passenger Elevator.

Path of Travel.

Pedestrian.

Pedestrian Way.

Permanent.

Permit.

Pictogram. ~~A pictorial symbol that represents activities, facilities, or concepts.~~

Place of Public Accommodation.

Platform.

Platform (Wheelchair) Lift.

Play Area. ~~A portion of a site containing play components designed and constructed for children.~~

Play Component. ~~An element intended to generate specific opportunities for play, socialization, or learning. Play components are manufactured or natural; and are stand-alone or part of a composite play structure.~~

Point-of-Sale Device.

Powder Room.

Power-Assisted Door.

Private Building or Facility. ~~A place of public accommodation or a commercial building or facility subject to title III of the ADA and 28 CFR part 36 or a transportation building or facility subject to title III~~

~~of the ADA and 49 CFR 37.45.~~

Professional Office of a Health Care Provider.

Public Building or Facility. ~~A building or facility or portion of a building or facility designed, constructed, or altered by, on behalf of, or for the use of a public entity subject to title II of the ADA and 28 CFR part 35 or to title II of the ADA and 49 CFR 37.41 or 37.43.~~

Public Entity.

Public Entrance. ~~An entrance that is not a service entrance or a restricted entrance.~~

Public Housing.

Public Use. ~~Interior or exterior rooms, spaces, or elements that are made available to the public. Public use may be provided at a building or facility that is privately or publicly owned.~~

Public-Use Areas.

Public Way. ~~Any street, alley or other parcel of land open to the outside air leading to a public street, which has been deeded, dedicated or otherwise permanently appropriated to the public for public use and which has a clear width and height of not less than 10 feet (3050 mm).~~

Qualified Historic Building or Facility. ~~A building or facility that is listed in or eligible for listing in the National Register of Historic Places, or designated as historic under an appropriate State or local law.~~

Ramp. ~~A walking surface that has a running slope steeper than 1:20.~~

Reasonable Portion.

Recommend.

Remodeling.

Repair.

Residential Dwelling Unit. ~~A unit intended to be used as a residence, that is primarily long-term in nature. Residential dwelling units do not include transient lodging, inpatient medical care, licensed long-term care, and detention or correctional facilities.~~

Restricted Entrance. ~~An entrance that is made available for common use on a controlled basis but not public use and that is not a service entrance.~~

Riser.

Running Slope. ~~The slope that is parallel to the direction of travel (see cross slope).~~

Self-Service Storage. ~~Building or facility designed and used for the purpose of renting or leasing individual storage spaces to customers for the purpose of storing and removing personal property on a self-service basis.~~

Service Entrance. ~~An entrance intended primarily for delivery of goods or services.~~

Shall.

Shopping Center (or Shopping Mall).

Should.

Sidewalk.

Signage.

Sink.

Site. ~~A parcel of land bounded by a property line or a designated portion of a public right-of-way.~~

Sleeping Accommodations.

Soft Contained Play Structure. ~~A play structure made up of one or more play components where the user enters a fully enclosed play environment that utilizes pliable materials, such as plastic, netting, or fabric.~~

Space. ~~A definable area, such as a room, toilet room, hall, assembly area, entrance, storage room, alcove, courtyard, or lobby.~~

Specified Public Transportation.

Stage.

Stair.

Stairway.

Story. ~~That portion of a building or facility designed for human occupancy included between the upper surface of a floor and upper surface of the floor or roof next above. A story containing one or more mezzanines has more than one floor level.~~

Structural Frame. ~~The columns and the girders, beams, and trusses having direct connections to the columns and all other members that are essential to the stability of the building or facility as a whole.~~

Structure.

Tactile. ~~An object that can be perceived using the sense of touch.~~

Tactile Sign.

Technically Infeasible. ~~With respect to an alteration of a building or a facility, something that has little likelihood of being accomplished because existing structural conditions would require removing or altering a load-bearing member that is an essential part of the structural frame; or because other existing physical or site constraints prohibit modification or addition of elements, spaces, or features that are in full and strict compliance with the minimum requirements.~~

Teeing Ground. ~~In golf, the starting place for the hole to be played.~~

Temporary.

Text Telephone.

Transfer Device. ~~Equipment designed to facilitate the transfer of a person from a wheelchair or other mobility aid to and from an amusement ride seat.~~

Transient Lodging. ~~A building or facility containing one or more guest room(s) for sleeping that provides accommodations that are primarily short-term in nature. Transient lodging does not include~~

~~residential dwelling units intended to be used as a residence, inpatient medical care facilities, licensed long-term care facilities, detention or correctional facilities, or private buildings or facilities that contain not more than five rooms for rent or hire and that are actually occupied by the proprietor as the residence of such proprietor.~~

Transit Boarding Platform.

Transition Plate. ~~A sloping pedestrian walking surface located at the end(s) of a gangway.~~

Tread.

TTY. ~~An abbreviation for teletypewriter. Machinery that employs interactive text-based communication through the transmission of coded signals across the telephone network. TTYs may include, for example, devices known as TDDs (telecommunication display devices or telecommunication devices for deaf persons) or computers with special modems. TTYs are also called text telephones.~~

Unreasonable Hardship.

Use Zone. ~~The ground level area beneath and immediately adjacent to a play structure or play equipment that is designated by ASTM F 1487 (incorporated by reference, see "Referenced Standards" in Chapter 1) for unrestricted circulation around the play equipment and where it is predicted that a user would land when falling from or exiting the play equipment.~~

Valuation Threshold.

Vehicular Way. ~~A route provided for vehicular traffic, such as in a street, driveway, or parking facility.~~

Walk. ~~An exterior prepared surface for pedestrian use, including pedestrian areas such as plazas and courts.~~

Wet Bar.

Wheelchair.

Wheelchair Space. ~~Space for a single wheelchair and its occupant.~~

Workstation.

Work Area Equipment. ~~Any machine, instrument, engine, motor, pump, conveyor, or other apparatus used to perform work. As used in this document, this term shall apply only to equipment that is permanently installed or built-in in employee work areas. Work area equipment does not include passenger elevators and other accessible means of vertical transportation.~~

11B-107 Special Conditions Appeals Action

See Chapter 1, Section 1.9.1.5.

11B-108 Maintenance of Accessible Features

A public accommodation shall maintain in operable working condition those features of facilities and equipment that are required to be accessible to and useable by persons with disabilities. Isolated or temporary interruptions in service or accessibility due to maintenance or repairs shall be permitted.

~~CHAPTER~~ *DIVISION* 2: SCOPING REQUIREMENTS

*11B-*201 Application

***11B-*201.1 Scope.** All areas of newly designed and newly constructed buildings and facilities and altered portions of existing buildings and facilities shall comply with these requirements.

***11B-*201.2 Application Based on Building or Facility Use.** Where a site, building, facility, room, or space contains more than one use, each portion shall comply with the applicable requirements for that use.

***11B-*201.3 Temporary and Permanent Structures.** These requirements shall apply to temporary and permanent buildings and facilities.

11B-201.4 Construction Support Facilities. *These requirements shall apply to temporary or permanent construction support facilities for uses and activities not directly associated with the actual processes of construction, including but not limited to offices, meeting rooms, plan rooms, other administrative or support functions. When provided, toilet and bathing facilities serving construction support facilities shall comply with 11B-213. When toilet and bathing facilities serving construction support facilities are provided by portable units, at least one of each type shall be accessible and connected to the construction support facilities it serves by an accessible route.*

> ***EXCEPTION:*** *During construction an accessible route shall not be required between site arrival points or the boundary of the area of construction and the entrance to the construction support facilities if the only means of access between them is a vehicular way not providing pedestrian access.*

*11B-*202 Existing Buildings and Facilities

***11B-*202.1 General.** Additions and alterations to existing buildings or facilities shall comply with *11B-*202.

***11B-*202.2 Additions.** Each addition to an existing building or facility shall comply with the requirements for new construction~~. Each addition that affects or could affect the usability of or access to an area containing a primary function~~ *and* shall comply with *11B-*202.4.

***11B-*202.3 Alterations.** Where existing elements or spaces are altered, each altered element or space shall comply with the applicable requirements of ~~Chapter 2~~ *Division 2, including 11B-202.4.*

> **EXCEPTIONS 1.** ***Reserved.*** ~~Unless required by 202.4, where elements or spaces are altered and the circulation path to the altered element or space is not altered, an accessible route shall not be required.~~
>
> **2.** ***Technically Infeasible.*** In alterations, where *the enforcing authority determines* compliance with applicable requirements is technically infeasible, the alteration shall *provide equivalent facilitation or* comply with the requirements to the maximum extent feasible. *The details of the finding that full compliance with the requirements is technically infeasible shall be recorded and entered into the files of the enforcing agency.*
>
> **3.** Residential dwelling units not required to be accessible in compliance with *this code* ~~a standard issued pursuant to the Americans with Disabilities Act or Section 504 of the Rehabilitation Act of 1973, as amended,~~ shall not be required to comply with *11B-*202.3.
>
> ***11B-*202.3.1 Prohibited Reduction in Access.** An alteration that decreases or has the effect of decreasing the accessibility of a building or facility below the requirements for new construction at the time of the alteration is prohibited.

***11B-*202.3.2 Extent of Application.** An alteration of an existing element, space, or area of a building or facility shall not impose a requirement for accessibility greater than required for new construction.

11B-202.3.3 Alteration of Single Elements. *If alterations of single elements, when considered together, amount to an alteration of a room or space in a building or facility, the entire room or space shall be made accessible.*

11B-*202.4 *Path of Travel Requirements in* Alterations*, Additions and Structural Repairs. ~~**Affecting Primary Function Areas.** In addition to the requirements of 202.3, an alteration that affects or could affect the usability of or access to an area containing a primary function shall be made so as to ensure that, to the maximum extent feasible, the path of travel to the altered area, including the rest rooms, telephones, and drinking fountains serving the altered area, are readily accessible to and usable by individuals with disabilities, unless such alterations are disproportionate to the overall alterations in terms of cost and scope as determined under criteria established by the Attorney General. In existing transportation facilities, an area of primary function shall be as defined under regulations published by the Secretary of the Department of Transportation or the Attorney General.~~ *When alterations or additions are made to existing buildings or facilities, an accessible path of travel to the specific area of alteration or addition shall be provided. The primary accessible path of travel shall include:*

1. A primary entrance to the building or facility,

2. Toilet and bathing facilities serving the area,

3. Drinking fountains serving the area,

4. Public telephones serving the area, and

5. Signs.

~~**EXCEPTION:**~~ ***EXCEPTIONS: 1.*** Residential dwelling units shall ~~not be required to~~ comply with ~~202.4~~ *11B-233.3.4.2*.

2. *If the following elements of a path of travel have been constructed or altered in compliance with the accessibility requirements of the immediately preceding edition of the California Building Code, it shall not be required to retrofit such elements to reflect the incremental changes in this code solely because of an alteration to an area served by those elements of the path of travel:*

1. A primary entrance to the building or facility,

2. Toilet and bathing facilities serving the area,

3. Drinking fountains serving the area,

4. Public telephones serving the area, and

5. Signs.

3. *Additions or alterations to meet accessibility requirements consisting of one or more of the following items shall be limited to the actual scope of work of the project and shall not be required to comply with 11B-202.4:*

1. Altering one building entrance.

2. Altering one existing toilet facility.

3. Altering existing elevators.

4. Altering existing steps.

5. Altering existing handrails.

4. *Alterations solely for the purpose of barrier removal undertaken pursuant to the requirements of the Americans with Disabilities Act (Public Law 101-336, 28 C.F.R., Section 36.304) or the accessibility requirements of this code as those requirements or regulations now exist or are hereafter amended consisting of one or more of the following items shall be limited to the actual scope of work of the project and shall not be required to comply with 11B-202.4:*

1. Installing ramps.

2. Making curb cuts in sidewalks and entrance.

3. Repositioning shelves.

4. Rearranging tables, chairs, vending machines, display racks, and other furniture.

5. Repositioning telephones.

6. Adding raised markings on elevator control buttons.

7. Installing flashing alarm lights.

8. Widening doors.

9. Installing offset hinges to widen doorways.

10. Eliminating a turnstile or providing an alternative accessible route.

11. Installing accessible door hardware.

12. Installing grab bars in toilet stalls.

13. Rearranging toilet partitions to increase maneuvering space.

14. Insulating lavatory pipes under sinks to prevent burns.

15. Installing a raised toilet seat.

16. Installing a full-length bathroom mirror.

17. Repositioning the paper towel dispenser in a bathroom.

18. Creating designated accessible parking spaces.

19. Removing high-pile, low-density carpeting.

5. *Alterations of existing parking lots by resurfacing and/or restriping shall be limited to the actual scope of work of the project and shall not be required to comply with 11B-202.4.*

6.*The addition or replacement of signs and/or identification devices shall be limited to the actual scope of work of the project and shall not be required to comply with 11B-202.4.*

7. *Projects consisting only of heating, ventilation, air conditioning, reroofing, electrical work not involving placement of switches and receptacles, cosmetic work that does not affect items regulated by this code, such as painting, equipment not considered to be a part of the architecture of the building or area, such as computer terminals and office equipment shall not be required to comply with 11B-202.4. unless they affect the usability of the building or facility.*

8. *When the adjusted construction cost is less than or equal to the current valuation threshold, as defined in Chapter 2, Section 202, the cost of compliance with 11B-202.4 shall be limited to 20 percent of the adjusted construction cost of alterations, structural repairs or additions. When the cost of full compliance with 11B-202.4 would exceed 20 percent, compliance shall be provided to the greatest extent possible without exceeding 20 percent.*

When the adjusted construction cost exceeds the current valuation threshold, as defined in Chapter 2, Section 202, and the enforcing agency determines the cost of compliance with 11B-202.4 is an unreasonable hardship, as defined in Chapter 2, Section 202, full compliance with 11B-202.4 shall not be required. Compliance shall be provided by equivalent facilitation or to the greatest extent possible without creating an unreasonable hardship; but in no case shall the cost of compliance be less than 20 percent of the adjusted construction cost of alterations, structural repairs or additions. The details of the finding of unreasonable hardship shall be recorded and entered into the files of the enforcing agency and shall be subject to Chapter 1, Section 1.9.1.5, Special Conditions for Persons with Disabilities Requiring Appeals Action Ratification.

For the purposes of this exception, the adjusted construction cost of alterations, structural repairs or additions shall not include the cost of alterations to path of travel elements required to comply with 11B-202.4.

In choosing which accessible elements to provide, priority should be given to those elements that will provide the greatest access in the following order:

1. *An accessible entrance;*

2. *An accessible route to the altered area;*

3. *At least one accessible restroom for each sex;*

4. *Accessible telephones;*

5. *Accessible drinking fountains; and*

6. *When possible, additional accessible elements such as parking, storage and alarms.*

If an area has been altered without providing an accessible path of travel to that area, and subsequent alterations of that area or a different area on the same path of travel are undertaken within three years of the original alteration, the total cost of alterations to the areas on that path of travel during the preceding three-year period shall be considered in determining whether the cost of making that path of travel accessible is disproportionate.

9. *Certain types of privately funded, multistory buildings and facilities were formerly exempt from accessibility requirements above and below the first floor under this code, but as of, April 1, 1994, are no longer exempt due to more restrictive provisions in the federal Americans with Disabilities Act. In alteration projects involving buildings and facilities previously approved and built without elevators, areas above and below the ground floor are subject to the 20-percent disproportionality provisions described in Exception 8, above, even if the value of the project exceeds the valuation threshold in Exception 8. The types of buildings and facilities are:*

1. *Office buildings and passenger vehicle service stations of three stories or more and 3,000 or more square feet (279 m^2) per floor.*

2. *Offices of physicians and surgeons.*

3. *Shopping centers.*

4. Other buildings and facilities three stories or more and 3,000 or more square feet (279 m^2) per floor if a reasonable portion of services sought and used by the public is available on the accessible level.

For the general privately funded multistory building exception applicable to new construction and alterations, see Division 11B-206.2.3, Exception 1.

The elevator exception set forth in this section does not obviate or limit in any way the obligation to comply with the other accessibility requirements in this code. For example, floors above or below the accessible ground floor must meet the requirements of this section except for elevator service. If toilet or bathing facilities are provided on a level not served by an elevator, then toilet or bathing facilities must be provided on the accessible ground floor.

***11B-*202.5 Alterations to Qualified Historic Buildings and Facilities.** Alterations to a qualified historic building or facility shall comply with ~~202.3 and 202.4.~~ *the State Historical Building Code, Part 8, Title 24, of the California Code of Regulations.*

EXCEPTION: ***Reserved.*** ~~Where the State Historic Preservation Officer or Advisory Council on Historic Preservation determines that compliance with the requirements for accessible routes, entrances, or toilet facilities would threaten or destroy the historic significance of the building or facility, the exceptions for alterations to qualified historic buildings or facilities for that element shall be permitted to apply.~~

***11B-*203 General Exceptions**

***11B-*203.1 General.** Sites, buildings, facilities, and elements are exempt from these requirements to the extent specified by *11B-*203.

***11B-*203.2 Construction Sites.** Structures and sites directly associated with the actual processes of construction, including but not limited to, scaffolding, bridging, materials hoists, materials storage, and construction trailers shall not be required to comply with these requirements or to be on an accessible route. Portable toilet units provided for use exclusively by construction personnel on a construction site shall not be required to comply with *11B-*213 or to be on an accessible route.

***11B-*203.3 Raised Areas.** Areas raised primarily for purposes of security, life safety, or fire safety, including but not limited to, observation or lookout galleries, prison guard towers, fire towers, or life guard stands shall not be required to comply with these requirements or to be on an accessible route.

***11B-*203.4 Limited Access Spaces.** Spaces *not customarily occupied and* accessed only by ladders, catwalks, crawl spaces, or very narrow passageways shall not be required to comply with these requirements or to be on an accessible route.

***11B-*203.5 Machinery Spaces.** Spaces frequented only by service personnel for maintenance, repair, or occasional monitoring of equipment shall not be required to comply with these requirements or to be on an accessible route. Machinery spaces include, but are not limited to, elevator pits or elevator penthouses; mechanical, electrical or communications equipment rooms; piping or equipment catwalks; water or sewage treatment pump rooms and stations; electric substations and transformer vaults; and highway and tunnel utility facilities.

***11B-*203.6 Single Occupant Structures.** Single occupant structures accessed only by passageways below grade or elevated above standard curb height, including but not limited to, toll booths that are accessed only by underground tunnels, shall not be required to comply with these requirements or to be on an accessible route.

***11B-*203.7 Detention and Correctional Facilities.** In detention and correctional facilities, common use areas that are used only by inmates or detainees and security personnel and that do not serve holding

cells or housing cells required to comply with *11B-*232, shall not be required to comply with these requirements or to be on an accessible route.

***11B-*203.8 Residential Facilities.** In *public housing* residential facilities, common use areas that do not serve residential dwelling units required to provide mobility features complying with *11B-*809.2 through *11B-*809.4 *and adaptable features complying with Chapter 11A, Division IV* shall not be required to comply with these requirements or to be on an accessible route.

***11B-*203.9 Employee Work Areas.** Spaces and elements within employee work areas shall only be required to comply with *11B-*206.2.8, *11B-*207.1, and *11B-*215.3 and shall be designed and constructed so that individuals with disabilities can approach, enter, and exit the employee work area. ~~Employee work areas, or portions of employee work areas, other than raised courtroom stations, that are less than 300 square feet (28 m^2) and elevated 7 inches (180 mm) or more above the finish floor or ground where the elevation is essential to the function of the space shall not be required to comply with these requirements or to be on an accessible route.~~

***11B-*203.10 Raised Refereeing, Judging, and Scoring Areas.** Raised structures used solely for refereeing, judging, or scoring a sport shall not be required to comply with these requirements or to be on an accessible route. *An accessible route complying with Division 4 shall be provided to the ground- or floor-level entry points, where provided, of stairs, ladders, or other means of reaching the raised elements or areas.*

***11B-*203.11 Water Slides.** Water slides shall not be required to comply with these requirements or to be on an accessible route. *An accessible route complying with Division 4 shall be provided to the ground- or floor-level entry points, where provided, of stairs, ladders, or other means of reaching the raised elements or areas.*

***11B-*203.12 Animal Containment Areas.** Animal containment areas that are not for public use shall not be required to comply with these requirements or to be on an accessible route. *Animal containment areas for public use shall be on an accessible route.*

***11B-*203.13 Raised Boxing or Wrestling Rings.** Raised boxing or wrestling rings shall not be required to comply with these requirements or to be on an accessible route. *An accessible route complying with Division 4 shall be provided to the ground- or floor-level entry points, where provided, of stairs, ladders, or other means of reaching the raised elements or areas.*

***11B-*203.14 Raised Diving Boards and Diving Platforms.** Raised diving boards and diving platforms shall not be required to comply with these requirements or to be on an accessible route. *An accessible route complying with Division 4 shall be provided to the ground- or floor-level entry points, where provided, of stairs, ladders, or other means of reaching the raised elements or areas.*

***11B-*204 Protruding Objects**

***11B-*204.1 General.** Protruding objects on circulation paths shall comply with *11B-*307.

> **EXCEPTIONS: 1.** Within areas of sport activity, protruding objects on circulation paths shall not be required to comply with *11B-*307.
>
> **2.** Within play areas, protruding objects on circulation paths shall not be required to comply with *11B-*307 provided that ground level accessible routes provide vertical clearance in compliance with *11B-*1008.2.

***11B-*205 Operable Parts**

***11B-*205.1 General.** Operable parts on accessible elements, accessible routes, and in accessible rooms and spaces shall comply with *11B-*309.

EXCEPTIONS: 1. Operable parts that are intended for use only by service or maintenance personnel shall not be required to comply with *11B*-309.

2. Electrical or communication receptacles serving a dedicated use shall not be required to comply with *11B*-309.

3. ***Reserved.*** ~~Where two or more outlets are provided in a kitchen above a length of counter top that is uninterrupted by a sink or appliance, one outlet shall not be required to comply with 309.~~

4. Floor electrical receptacles shall not be required to comply with *11B*-309.

5. HVAC diffusers shall not be required to comply with *11B*-309.

6. Except for light switches, where redundant controls are provided for a single element, one control in each space shall not be required to comply with *11B*-309.

7. Cleats and other boat securement devices shall not be required to comply with *11B*-309.3.

8. Exercise machines and exercise equipment shall not be required to comply with *11B*-309.

***11B*-206 Accessible Routes**

***11B*-206.1 General.** Accessible routes shall be provided in accordance with *11B*-206 and shall comply with ~~Chapter~~ *Division* 4.

***11B*-206.2 Where Required.** Accessible routes shall be provided where required by *11B*-206.2.

***11B*-206.2.1 Site Arrival Points.** At least one accessible route shall be provided within the site from accessible parking spaces and accessible passenger loading zones; public streets and sidewalks; and public transportation stops to the accessible building or facility entrance they serve. *Where more than one route is provided, all routes must be accessible.*

EXCEPTIONS: 1. ***Reserved.*** ~~Where exceptions for alterations to qualified historic buildings or facilities are permitted by 202.5, no more than one accessible route from a site arrival point to an accessible entrance shall be required.~~

2. An accessible route shall not be required between site arrival points and the building or facility entrance if the only means of access between them is a vehicular way not providing pedestrian access.

3. *General circulation paths shall be permitted when located in close proximity to an accessible route.*

***11B*-206.2.2 Within a Site.** At least one accessible route shall connect accessible buildings, accessible facilities, accessible elements, and accessible spaces that are on the same site.

EXCEPTION: An accessible route shall not be required between accessible buildings, accessible facilities, accessible elements, and accessible spaces if the only means of access between them is a vehicular way not providing pedestrian access.

***11B*-206.2.3 Multi-Story Buildings and Facilities.** At least one accessible route shall connect each story and mezzanine in multi-story buildings and facilities.

EXCEPTIONS: ~~**1.** In private buildings or facilities that are less than three stories or that have less than 3000 square feet (279 m^2) per story, an accessible route shall not be required to connect stories provided that the building or facility is not a shopping center, a shopping mall, the professional office of a health care provider, a terminal, depot or other station used for specified~~

~~public transportation, an airport passenger terminal, or another type of facility as determined by the Attorney General.~~
1. *The following types of privately funded multistory buildings do not require a ramp or elevator above and below the first floor:*

1.1. *Multistoried office buildings (other than the professional office of a health care provider) and passenger vehicle service stations less than three stories high or less than 3,000 square feet (279 m^2) per story.*

1.2. *Any other privately funded multistoried building that is not a shopping center, shopping mall or the professional office of a health care provider, or a terminal, depot or other station used for specified public transportation, or an airport passenger terminal and that is less than three stories high or less than 3,000 square feet (279 m^2) per story if a reasonable portion of all facilities and accommodations normally sought and used by the public in such a building are accessible to and usable by persons with disabilities.*

2. Reserved. ~~Where a two story public building or facility has one story with an occupant load of five or fewer persons that does not contain public use space, that story shall not be required to be connected to the story above or below.~~

3. In detention and correctional facilities, an accessible route shall not be required to connect stories where cells with mobility features required to comply with *11B*-807.2, all common use areas serving cells with mobility features required to comply with *11B*-807.2, and all public use areas are on an accessible route.

4. In residential facilities, an accessible route shall not be required to connect stories where residential dwelling units with mobility features required to comply with *11B*-809.2 through *11B*-809.4, *residential dwelling units with adaptable features complying with Chapter 11A, Division IV,* all common use areas serving residential dwelling units with mobility features required to comply with *11B*-809.2 through *11B*-809.4, *all common use areas serving residential dwelling units with adaptable features complying with Chapter 11A, Division IV,* and public use areas serving residential dwelling units are on an accessible route.

5. Within multi-story transient lodging guest rooms with mobility features required to comply with *11B*-806.2, an accessible route shall not be required to connect stories provided that spaces complying with *11B*-806.2 are on an accessible route and sleeping accommodations for two persons minimum are provided on a story served by an accessible route.

6. In air traffic control towers, an accessible route shall not be required to serve the cab and *the equipment areas on* the floor immediately below the cab.

7. ***Reserved.*** ~~Where exceptions for alterations to qualified historic buildings or facilities are permitted by 202.5, an accessible route shall not be required to stories located above or below the accessible story.~~

11B-**206.2.3.1 Stairs and Escalators in Existing Buildings.** In alterations and additions, where an escalator or stair is provided where none existed previously and major structural modifications are necessary for the installation, an accessible route shall be provided between the levels served by the escalator or stair unless exempted by *11B*-206.2.3 Exceptions 1 through 7.

11B-206.2.3.2 Distance to Elevators. *In new construction of buildings where elevators are required by 11B-206.2.3, and which exceed 10,000 square feet (929 m^2) on any floor, an accessible means of vertical access via ramp, elevator or lift shall be provided within 200 feet (60,960 mm) of travel of each stair and each escalator. In existing buildings that exceed 10,000 square feet (929 m^2) on any floor and in which elevators are required by 11B-206.2.3, whenever a newly constructed means of vertical access is provided via stairs or an escalator, an accessible*

means of vertical access via ramp, elevator or lift shall be provided within 200 feet (60,960 mm) of travel of each new stair or escalator.

***11B*-206.2.4 Spaces and Elements.** At least one accessible route shall connect accessible building or facility entrances with all accessible spaces and elements within the building or facility*, including mezzanines,* which are otherwise connected by a circulation path unless exempted by *11B*-206.2.3 Exceptions 1 through 7.

EXCEPTIONS: 1. ***Reserved.*** ~~Raised courtroom stations, including judges' benches, clerks' stations, bailiffs' stations, deputy clerks' stations, and court reporters' stations shall not be required to provide vertical access provided that the required clear floor space, maneuvering space, and, if appropriate, electrical service are installed at the time of initial construction to allow future installation of a means of vertical access complying with 405, 407, 408, or 410 without requiring substantial reconstruction of the space.~~

2. In assembly areas with fixed seating required to comply with *11B*-221, an accessible route shall not be required to serve fixed seating where wheelchair spaces required to be on an accessible route are not provided.

3. ***Reserved.*** ~~Accessible routes shall not be required to connect mezzanines where buildings or facilities have no more than one story. In addition, accessible routes shall not be required to connect stories or mezzanines where multi-story buildings or facilities are exempted by 206.2.3 Exceptions 1 through 7.~~

***11B*-206.2.5 ~~Restaurants and Cafeterias~~*. Restaurants, Cafeterias, Banquet Facilities and Bars*.** In ~~restaurants and cafeterias,~~ *restaurants, cafeterias, banquet facilities, bars, and similar facilities,* an accessible route shall be provided to all ~~dining~~ *functional* areas, including raised or sunken ~~dining~~ areas, and outdoor ~~dining~~ areas.

EXCEPTIONS: 1. In *alterations of* buildings or facilities not required to provide an accessible route between stories, an accessible route shall not be required to a mezzanine dining area where the mezzanine contains less than 25 percent of the total combined area for seating and dining and where the same decor and services are provided in the accessible area.

2. ***Reserved.*** ~~In alterations, an accessible route shall not be required to existing raised or sunken dining areas, or to all parts of existing outdoor dining areas where the same services and decor are provided in an accessible space usable by the public and not restricted to use by people with disabilities.~~

3. In sports facilities, tiered dining areas providing seating required to comply with *11B*-221 shall be required to have accessible routes serving at least 25 percent of the dining area provided that accessible routes serve seating complying with *11B*-221 and each tier is provided with the same services.

***11B*-206.2.6 Performance Areas.** Where a circulation path directly connects a performance area to an assembly seating area, an accessible route shall directly connect the assembly seating area with the performance area. An accessible route shall be provided from performance areas to ancillary areas or facilities used by performers unless exempted by *11B*-206.2.3 Exceptions 1 through 7.

***11B*-206.2.7 Press Boxes.** Press boxes in assembly areas shall be on an accessible route.

EXCEPTIONS: 1. An accessible route shall not be required to press boxes in bleachers that have points of entry at only one level provided that the aggregate area of all press boxes is 500 square feet (46 m^2) maximum.

2. An accessible route shall not be required to free-standing press boxes that are elevated above grade 12 feet (3660 mm) minimum provided that the aggregate area of all press boxes is 500 square feet (46 m^2) maximum.

***11B*-206.2.8 Employee Work Areas.** Common use circulation paths within employee work areas shall comply with *11B*-402.

EXCEPTIONS: 1. *Reserved.* ~~Common use circulation paths located within employee work areas that are less than 1000 square feet (93 m^2) and defined by permanently installed partitions, counters, casework, or furnishings shall not be required to comply with 402.~~

2. Common use circulation paths located within employee work areas that are an integral component of work area equipment shall not be required to comply with *11B*-402.

3. Common use circulation paths located within exterior employee work areas that are fully exposed to the weather shall not be required to comply with *11B*-402.

***11B*-206.2.9 Amusement Rides.** Amusement rides required to comply with *11B*-234 shall provide accessible routes in accordance with *11B*-206.2.9. Accessible routes serving amusement rides shall comply with ~~Chapter~~ *Division* 4 except as modified by *11B*-1002.2.

***11B*-206.2.9.1 Load and Unload Areas.** Load and unload areas shall be on an accessible route. Where load and unload areas have more than one loading or unloading position, at least one loading and unloading position shall be on an accessible route.

***11B*-206.2.9.2 Wheelchair Spaces, Ride Seats Designed for Transfer, and Transfer Devices.** When amusement rides are in the load and unload position, wheelchair spaces complying with *11B*-1002.4, amusement ride seats designed for transfer complying with *11B*-1002.5, and transfer devices complying with *11B*-1002.6 shall be on an accessible route.

***11B*-206.2.10 Recreational Boating Facilities.** Boat slips required to comply with *11B*-235.2 and boarding piers at boat launch ramps required to comply with *11B*-235.3 shall be on an accessible route. Accessible routes serving recreational boating facilities shall comply with Chapter 4, except as modified by *11B*-1003.2.

***11B*-206.2.11 Bowling Lanes.** Where bowling lanes are provided, at least 5 percent, but no fewer than one of each type of bowling lane, shall be on an accessible route.

***11B*-206.2.12 Court Sports.** In court sports, at least one accessible route shall directly connect both sides of the court.

***11B*-206.2.13 Exercise Machines and Equipment.** Exercise machines and equipment required to comply with *11B*-236 shall be on an accessible route.

***11B*-206.2.14 Fishing Piers and Platforms.** Fishing piers and platforms shall be on an accessible route. Accessible routes serving fishing piers and platforms shall comply with ~~Chapter~~ *Division* 4 except as modified by *11B*-1005.1.

***11B*-206.2.15 Golf Facilities.** At least one accessible route shall connect accessible elements and spaces within the boundary of the golf course. In addition, accessible routes serving golf car rental areas; bag drop areas; course weather shelters complying with *11B*-238.2.3; course toilet rooms; and practice putting greens, practice teeing grounds, and teeing stations at driving ranges complying with *11B*-238.3 shall comply with ~~Chapter~~ *Division* 4 except as modified by *11B*-1006.2.

EXCEPTION: Golf car passages complying with *11B*-1006.3 shall be permitted to be used for all or part of accessible routes required by *11B*-206.2.15.

***11B-*206.2.16 Miniature Golf Facilities.** Holes required to comply with *11B-*239.2, including the start of play, shall be on an accessible route. Accessible routes serving miniature golf facilities shall comply with ~~Chapter~~ *Division* 4 except as modified by *11B-*1007.2.

***11B-*206.2.17 Play Areas.** Play areas shall provide accessible routes in accordance with *11B-*206.2.17. Accessible routes serving play areas shall comply with ~~Chapter~~ *Division* 4 except as modified by *11B-*1008.2.

***11B-*206.2.17.1 Ground Level and Elevated Play Components.** At least one accessible route shall be provided within the play area. The accessible route shall connect ground level play components required to comply with *11B-*240.2.1 and elevated play components required to comply with *11B-*240.2.2, including entry and exit points of the play components.

***11B-*206.2.17.2 Soft Contained Play Structures.** Where three or fewer entry points are provided for soft contained play structures, at least one entry point shall be on an accessible route. Where four or more entry points are provided for soft contained play structures, at least two entry points shall be on an accessible route.

11B-206.2.18 Area of Sport Activity. *An accessible route shall be provided to the boundary of each area of sport activity.*

***11B-*206.3 Location.** Accessible routes shall coincide with or be located in the same area as general circulation paths. Where circulation paths are interior, required accessible routes shall also be interior. *An accessible route shall not pass through kitchens, storage rooms, restrooms, closets or other spaces used for similar purposes, except as permitted by Chapter 10.*

***11B-*206.4 Entrances.** Entrances shall be provided in accordance with *11B-*206.4. Entrance doors, doorways, and gates shall comply with *11B-*404 and shall be on an accessible route complying with *11B-*402.

EXCEPTIONS: 1. ***Reserved.*** ~~Where an alteration includes alterations to an entrance, and the building or facility has another entrance complying with 404 that is on an accessible route, the altered entrance shall not be required to comply with 206.4 unless required by 202.4.~~

2. ***Reserved.*** ~~Where exceptions for alterations to qualified historic buildings or facilities are permitted by 202.5, no more than one public entrance shall be required to comply with 206.4. Where no public entrance can comply with 206.4 under criteria established in 202.5 Exception, then either an unlocked entrance not used by the public shall comply with 206.4; or a locked entrance complying with 206.4 with a notification system or remote monitoring shall be provided.~~

***11B-*206.4.1 ~~Public~~ Entrances *and Exterior Ground Floor Exits*.** ~~In addition to entrances required by 206.4.2 through 206.4.9, at least 60 percent of all public~~ *All* entrances *and exterior ground-floor exits to buildings and facilities* shall comply with *11B-*404.

EXCEPTIONS: 1. *Exterior ground floor exits serving smoke-proof enclosures, stairwells, and exit doors serving stairs only shall not be required to comply with 11B-404.*

2. *Exits in excess of those required by Chapter 10, and which are more than 24 inches (610 mm) above grade shall not be required to comply with 11B-404. Such doors shall have warning signs complying with 11B-703.5, stating that they are not accessible.*

***11B-*206.4.2 Parking Structure Entrances.** Where direct access is provided for pedestrians from a parking structure to a building or facility entrance, each direct access to the building or facility entrance shall comply with *11B-*404.

***11B-*206.4.3 Entrances from Tunnels or Elevated Walkways.** Where direct access is provided for pedestrians from a pedestrian tunnel or elevated walkway to a building or facility, ~~at least one direct~~

~~entrance~~ *all entrances* to the building or facility from each tunnel or walkway shall comply with *11B-*404.

***11B-*206.4.4 Transportation Facilities.** In addition to the requirements of *11B-*206.4.2, *11B-*206.4.3, and *11B-*206.4.5 through *11B-*206.4.9, transportation facilities shall provide entrances in accordance with *11B-*206.4.4.

***11B-*206.4.4.1 Location.** In transportation facilities, where different entrances serve different transportation fixed routes or groups of fixed routes, ~~at least one public entrance~~ *entrances* serving each fixed route or group of fixed routes shall comply with *11B-*404.

EXCEPTION: Entrances to key stations and existing intercity rail stations retrofitted in accordance with 49 CFR 37.49 or 49 CFR 37.51 shall not be required to comply with *11B-*206.4.4.1.

***11B-*206.4.4.2 Direct Connections.** Direct connections to other facilities shall provide an accessible route complying with *11B-*404 from the point of connection to boarding platforms and all transportation system elements required to be accessible. Any elements provided to facilitate future direct connections shall be on an accessible route connecting boarding platforms and all transportation system elements required to be accessible.

EXCEPTION: In key stations and existing intercity rail stations, existing direct connections shall not be required to comply with *11B-*404.

***11B-*206.4.4.3 Key Stations and Intercity Rail Stations.** Key stations and existing intercity rail stations required by Subpart C of 49 CFR part 37 to be altered, shall have ~~at least one entrance~~ *entrances* complying with *11B-*404.

***11B-*206.4.5 Tenant Spaces.** ~~At least one accessible entrance~~ *All entrances* to each tenancy in a facility shall comply with *11B-*404.

EXCEPTION: Self-service storage facilities not required to comply with *11B-*225.3 shall not be required to be on an accessible route.

***11B-*206.4.6 Residential Dwelling Unit Primary Entrance.** In residential dwelling units, at least one primary entrance shall comply with *11B-*404. The primary entrance to a residential dwelling unit shall not be to a bedroom.

***11B-*206.4.7 Restricted Entrances.** Where restricted entrances are provided to a building or facility, ~~at least one restricted entrance~~ *all restricted entrances* to the building or facility shall comply with *11B-*404.

***11B-*206.4.8 Service Entrances.** If a service entrance is the only entrance to a building or to a tenancy in a facility, that entrance shall comply with *11B-*404. *In existing buildings and facilities, a service entrance shall not be the sole accessible entrance unless it is the only entrance to a building or facility.*

***11B-*206.4.9 Entrances for Inmates or Detainees.** Where entrances used only by inmates or detainees and security personnel are provided at judicial facilities, detention facilities, or correctional facilities, at least one such entrance shall comply with *11B-*404.

11B-206.4.10 Medical Care and Long-Term Care Facilities. *Weather protection by a canopy or roof overhang shall be provided at a minimum of one accessible entrance to licensed medical care and licensed long-term care facilities where the period of stay may exceed twenty-four hours. The area of weather protection shall include the passenger loading zone complying with 11B-209.3 and the accessible route from the passenger loading zone to the accessible entrance it serves.*

***11B*-206.5 Doors, Doorways, and Gates.** Doors, doorways, and gates providing user passage shall be provided in accordance with *11B*-206.5.

***11B*-206.5.1 Entrances.** Each entrance to a building or facility required to comply with *11B*-206.4 shall ~~have at least one door, doorway, or gate complying~~ *comply* with *11B*-404.

***11B*-206.5.2 Rooms and Spaces.** Within a building or facility, ~~at least one door, doorway, or gate serving each room or space~~ *every door, doorway or gate serving rooms and spaces* complying with ~~these requirements~~ *this chapter* shall comply with *11B*-404.

***11B*-206.5.3 Transient Lodging Facilities.** In transient lodging facilities, entrances, doors, and doorways providing user passage into and within guest rooms that are not required to provide mobility features complying with *11B*-806.2 shall comply with *11B*-404.2.3.

EXCEPTION: Shower and sauna doors in guest rooms that are not required to provide mobility features complying with *11B*-806.2 shall not be required to comply with *11B*-404.2.3.

***11B*-206.5.4 Residential Dwelling Units.** In residential dwelling units required to provide mobility features complying with *11B*-809.2 through *11B*-809.4, all doors and doorways providing user passage shall comply with *11B*-404.

***11B*-206.6 Elevators.** Elevators provided for passengers shall comply with *11B*-407. Where multiple elevators are provided, each elevator shall comply with *11B*-407.

EXCEPTIONS: 1. In a building or facility permitted to use the exceptions to *11B*-206.2.3 or permitted by *11B*-206.7 to use a platform lift, elevators complying with *11B*-408 shall be permitted.

2. Elevators complying with *11B*-408 or *11B*-409 shall be permitted in multi-story residential dwelling units. *Elevators provided as a means of access within a private residence shall be installed so that they are not accessible to the general public or to other occupants of the building.*

***11B*-206.6.1 Existing Elevators.** Where elements of existing elevators are altered, the same element shall also be altered in all elevators that are programmed to respond to the same hall call control as the altered elevator and shall comply with the requirements of *11B*-407 for the altered element.

***11B*-206.7 Platform Lifts.** Platform lifts shall comply with *11B*-410. Platform lifts shall be permitted as a component of an accessible route in new construction in accordance with *11B*-206.7. Platform lifts shall be permitted as a component of an accessible route in an existing building or facility.

***11B*-206.7.1 Performance Areas and Speakers' Platforms.** Platform lifts shall be permitted to provide accessible routes to performance areas and speakers' platforms.

***11B*-206.7.2 Wheelchair Spaces.** Platform lifts shall be permitted to provide an accessible route to comply with the wheelchair space dispersion and line-of-sight requirements of *11B*-221 and *11B*-802.

***11B*-206.7.3 Incidental Spaces.** Platform lifts shall be permitted to provide an accessible route to incidental spaces which are not public use spaces and which are occupied by five persons maximum.

***11B*-206.7.4 Judicial Spaces.** Platform lifts shall be permitted to provide an accessible route to: jury boxes and witness stands; raised courtroom stations including, judges' benches, clerks' stations, bailiffs' stations, deputy clerks' stations, and court reporters' stations; and to depressed areas such as the well of a court.

***11B*-206.7.5 Existing Site Constraints.** Platform lifts shall be permitted where existing exterior site constraints make use of a ramp or elevator infeasible.

***11B*-206.7.6 Guest Rooms and Residential Dwelling Units.** Platform lifts shall be permitted to connect levels within transient lodging guest rooms required to provide mobility features complying with *11B*-806.2 or residential dwelling units required to provide mobility features complying with *11B*-809.2 through *11B*-809.4 *and adaptable features complying with Chapter 11A, Division IV*.

***11B*-206.7.7 Amusement Rides.** Platform lifts shall be permitted to provide accessible routes to load and unload areas serving amusement rides.

***11B*-206.7.8 Play Areas.** Platform lifts shall be permitted to provide accessible routes to play components or soft contained play structures.

***11B*-206.7.9 Team or Player Seating.** Platform lifts shall be permitted to provide accessible routes to team or player seating areas serving areas of sport activity.

***11B*-206.7.10 Recreational Boating Facilities and Fishing Piers and Platforms.** Platform lifts shall be permitted to be used instead of gangways that are part of accessible routes serving recreational boating facilities and fishing piers and platforms.

***11B*-206.8 Security Barriers.** Security barriers, including but not limited to, security bollards and security check points, shall not obstruct a required accessible route or accessible means of egress.

EXCEPTION: Where security barriers incorporate elements that cannot comply with these requirements such as certain metal detectors, fluoroscopes, or other similar devices, the accessible route shall be permitted to be located adjacent to security screening devices. The accessible route shall permit persons with disabilities passing around security barriers to maintain visual contact with their personal items to the same extent provided others passing through the security barrier.

***11B*-207 Accessible Means of Egress**

***11B*-207.1 General.** Means of egress shall comply with ~~section 1003.2.13 of the International Building Code (2000 edition and 2001 Supplement) or section 1007 of the International Building Code (2003 edition) (incorporated by reference, see "Referenced Standards" in Chapter 1)~~ *Chapter 10, Section 1007*.

EXCEPTIONS: 1. Where means of egress are permitted by local building or life safety codes to share a common path of egress travel, accessible means of egress shall be permitted to share a common path of egress travel.

2. Areas of refuge shall not be required in detention and correctional facilities.

***11B*-207.2 Platform Lifts.** Standby power shall be provided for platform lifts permitted by ~~section 1003.2.13.4 of the International Building Code (2000 edition and 2001 Supplement) or section 1007.5 of the International Building Code (2003 edition) (incorporated by reference, see "Referenced Standards" in Chapter 1)~~ *Chapter 10, Section 1007.5* to serve as a part of an accessible means of egress. *To ensure continued operation in case of primary power loss, platform lifts shall be provided with standby power or with self-rechargeable battery power that provides sufficient power to operate all platform lift functions for a minimum of five upward and downward trips.*

***11B*-208 Parking Spaces**

***11B*-208.1 General.** Where parking spaces are provided, parking spaces shall be provided in accordance with *11B*-208.

EXCEPTION: Parking spaces used exclusively for buses, trucks, other delivery vehicles, ~~law enforcement vehicles,~~ or vehicular impound shall not be required to comply with 208 provided that lots accessed by the public are provided with a passenger loading zone complying with 503.)

***11B*-208.2 Minimum Number.** Parking spaces complying with *11B*-502 shall be provided in accordance with Table *11B*-208.2 except as required by *11B*-208.2.1, *11B*-208.2.2, and *11B*-208.2.3. Where more than one parking facility is provided on a site, the number of accessible spaces provided on the site shall be calculated according to the number of spaces required for each parking facility.

Table *11B*-208.2 Parking Spaces

Total Number of Parking Spaces Provided in Parking Facility	Minimum Number of Required Accessible Parking Spaces
1 to 25	1
26 to 50	2
51 to 75	3
76 to 100	4
101 to 150	5
151 to 200	6
201 to 300	7
301 to 400	8
401 to 500	9
501 to 1000	2 percent of total
1001 and over	20, plus 1 for each 100, or fraction thereof, over 1000

***11B*-208.2.1 Hospital Outpatient Facilities.** Ten percent of patient and visitor parking spaces provided to serve hospital outpatient facilities*, and free-standing buildings providing outpatient clinical services of a hospital,* shall comply with *11B*-502.

***11B*-208.2.2 Rehabilitation Facilities and Outpatient Physical Therapy Facilities.** Twenty percent of patient and visitor parking spaces provided to serve rehabilitation facilities specializing in treating conditions that affect mobility and outpatient physical therapy facilities shall comply with *11B*-502.

***11B*-208.2.3 Residential Facilities.** Parking spaces provided to serve residential facilities shall comply with *11B*-208.2.3.

***11B*-208.2.3.1 Parking for Residents.** Where at least one parking space is provided for each residential dwelling unit, at least one parking space complying with *11B*-502 shall be provided for each residential dwelling unit required to provide mobility features complying with *11B*-809.2 through *11B*-809.4.

***11B*-208.2.3.2 Additional Parking Spaces for Residents.** Where the total number of parking spaces provided for each residential dwelling unit exceeds one parking space per residential dwelling unit, 2 percent, but no fewer than one space, of all the parking spaces not covered by *11B*-208.2.3.1 shall comply with *11B*-502.

***11B*-208.2.3.3 Parking for Guests, Employees, and Other Non-Residents.** Where parking spaces are provided for persons other than residents, parking shall be provided in accordance with Table *11B*-208.2.

11B-208.2.3.4 Requests for Accessible Parking Spaces. *When assigned parking is provided, designated accessible parking for the adaptable residential dwelling units shall be provided on requests of residents with disabilities on the same terms and with the full range of choices (e.g., off-street parking, carport or garage) that are available to other residents.*

***11B*-208.2.4 Van Parking Spaces.** For every six or fraction of six parking spaces required by *11B*-208.2 to comply with *11B*-502, at least one shall be a van parking space complying with *11B*-502.

***11B-*208.3 Location.** Parking facilities shall comply with *11B-*208.3.

***11B-*208.3.1 General.** Parking spaces complying with *11B-*502 that serve a particular building or facility shall be located on the shortest accessible route from parking to an entrance complying with *11B-*206.4. Where parking serves more than one accessible entrance, parking spaces complying with *11B-*502 shall be dispersed and located on the shortest accessible route to the accessible entrances. In parking facilities that do not serve a particular building or facility, parking spaces complying with *11B-*502 shall be located on the shortest accessible route to an accessible pedestrian entrance of the parking facility.

EXCEPTIONS: 1. All van parking spaces shall be permitted to be grouped on one level within a multi-story parking facility.

2. Parking spaces shall be permitted to be located in different parking facilities if substantially equivalent or greater accessibility is provided in terms of distance from an accessible entrance or entrances, parking fee, and user convenience.

***11B-*208.3.2 Residential Facilities.** In residential facilities containing residential dwelling units required to provide mobility features complying with *11B-*809.2 through *11B-*809.4, *and adaptable features complying with Chapter 11A, Division IV* parking spaces provided in accordance with *11B-*208.2.3.1 shall be located on the shortest accessible route to the residential dwelling unit entrance they serve. Spaces provided in accordance with *11B-*208.2.3.2 shall be dispersed throughout all types of parking provided for the residential dwelling units.

EXCEPTION: Parking spaces provided in accordance with *11B-*208.2.3.2 shall not be required to be dispersed throughout all types of parking if substantially equivalent or greater accessibility is provided in terms of distance from an accessible entrance, parking fee, and user convenience.

11B-208.3.3 Private Garages Accessory to Residential Dwelling Units. *Private garages accessory to residential dwelling units shall comply with 11B-208.3. Private garages include individual garages and multiple individual garages grouped together.*

11B-208.3.3.1 *Detached private garages accessory to residential dwelling units, shall be accessible as required by 11B-208.3.*

11B-208.3.3.2 *Attached private garages directly serving a single residential dwelling unit shall provide at least one of the following options:*

1. A door leading directly from the residential dwelling unit which immediately enters the garage.

2. An accessible route from the residential dwelling unit to an exterior door entering the garage.

3. An accessible route from the residential dwelling unit's primary entry door to the vehicular entrance at the garage.

***11B-*209 Passenger Loading Zones and Bus Stops**

***11B-*209.1 General.** Passenger loading zones shall be provided in accordance with *11B-*209.

***11B-*209.2 Type.** Where provided, passenger loading zones shall comply with *11B-*209.2.

***11B-*209.2.1 Passenger Loading Zones.** Passenger loading zones, except those required to comply with *11B-*209.2.2 and *11B-*209.2.3, shall provide at least one passenger loading zone complying with *11B-*503 in every continuous 100 linear feet (~~30 m~~ *30480 mm*) of loading zone space, or fraction thereof.

***11B-*209.2.2 Bus Loading Zones.** In bus loading zones restricted to use by designated or specified public transportation vehicles, each bus bay, bus stop, or other area designated for lift or ramp deployment shall comply with *11B-*810.2.

***11B-*209.2.3 On-Street Bus Stops.** On-street bus stops shall comply with *11B-*810.2 to the maximum extent practicable.

***11B-*209.3 Medical Care and Long-Term Care Facilities.** At least one passenger loading zone complying with *11B-*503 shall be provided at an accessible entrance to licensed medical care and licensed long-term care facilities where the period of stay ~~exceeds~~ *may exceed* twenty-four hours.

***11B-*209.4 Valet Parking.** Parking facilities that provide valet parking services shall provide at least one passenger loading zone complying with *11B-*503. *The parking requirements of 11B-208.1 apply to facilities with valet parking.*

***11B-*209.5 Mechanical Access Parking Garages.** Mechanical access parking garages shall provide at least one passenger loading zone complying with *11B-*503 at vehicle drop-off and vehicle pick-up areas.

***11B-*210 Stairways**

***11B-*210.1 General.** Interior and exterior stairs ~~that are part of a means of egress~~ shall comply with *11B-*504.

EXCEPTIONS: 1. In detention and correctional facilities, stairs that are not located in public use areas shall not be required to comply with *11B-*504.

2. In alterations, stairs between levels that are connected by an accessible route shall not be required to comply with *11B-*504, except that *striping complying with 11B-504.4.1 and* handrails complying with *11B-*505 shall be provided when the stairs are altered.

3. In assembly areas, aisle stairs shall not be required to comply with *11B-*504 *except that striping complying with 11B-504.4.1 shall be provided*.

4. Stairs that connect play components shall not be required to comply with *11B-*504 *except that striping complying with 11B-504.4.1 shall be provided*.

***11B-*211 Drinking Fountains**

***11B-*211.1 General.** Where drinking fountains are provided on an exterior site, on a floor, or within a secured area they shall be provided in accordance with *11B-*211.

EXCEPTION: In detention or correctional facilities, drinking fountains only serving holding or housing cells not required to comply with *11B-*232 shall not be required to comply with *11B-*211.

***11B-*211.2 Minimum Number.** No fewer than two drinking fountains shall be provided. One drinking fountain shall comply with *11B-*602.1 through *11B-*602.6 and one drinking fountain shall comply with *11B-*602.7.

EXCEPTION: Where a single drinking fountain complies with *11B-*602.1 through *11B-*602.6 and *11B-*602.7, it shall be permitted to be substituted for two separate drinking fountains.

***11B-*211.3 More Than Minimum Number.** Where more than the minimum number of drinking fountains specified in *11B-*211.2 are provided, 50 percent of the total number of drinking fountains provided shall comply with *11B-*602.1 through *11B-*602.6, and 50 percent of the total number of drinking fountains provided shall comply with *11B-*602.7.

EXCEPTION: Where 50 percent of the drinking fountains yields a fraction, 50 percent shall be permitted to be rounded up or down provided that the total number of drinking fountains complying with *11B*-211 equals 100 percent of drinking fountains.

***11B*-212 Kitchens, Kitchenettes, *Wet Bars* and Sinks**

***11B*-212.1 General.** Where provided, kitchens, kitchenettes, *wet bars* and sinks shall comply with *11B*-212.

***11B*-212.2 Kitchens, ~~and~~ Kitchenettes, and Wet Bars.** Kitchens, ~~and~~ kitchenettes *and wet bars* shall comply with *11B*-804.

***11B*-212.3 Sinks.** Where sinks are provided, at least 5 percent, but no fewer than one, of each type provided in each accessible room or space shall comply with *11B*-606.

~~**EXCEPTION:**~~ ***EXCEPTIONS: 1.*** Mop, ~~or~~ service *or scullery* sinks shall not be required to comply with *11B*-212.3.

2. *Scrub sinks, as defined in California Plumbing Code Section 221.0, shall not be required to comply with 11B-606.*

***11B*-213 Toilet Facilities and Bathing Facilities**

***11B*-213.1 General.** Where toilet facilities and bathing facilities are provided, they shall comply with *11B*-213. Where toilet facilities and bathing facilities are provided in facilities permitted by *11B*-206.2.3 ~~Exceptions~~ *Exception* 1 ~~and 2~~ not to connect stories by an accessible route, toilet facilities and bathing facilities shall be provided on a story connected by an accessible route to an accessible entrance.

11B-213.1.1 Toilet Facilities for Designated User Groups. *Where separate toilet facilities are provided for the exclusive use of separate user groups, the toilet facilities serving each user group shall comply with 11B-213.*

***11B*-213.2 Toilet Rooms and Bathing Rooms.** Where toilet rooms are provided, each toilet room shall comply with *11B*-603. Where bathing rooms are provided, each bathing room shall comply with *11B*-603.

EXCEPTIONS: 1. In alterations where it is technically infeasible to comply with *11B*-603, altering existing toilet or bathing rooms shall not be required where a single unisex toilet room or bathing room complying with *11B*-213.2.1 is provided and located in the same area and on the same floor as existing inaccessible toilet or bathing rooms.

2. ***Reserved.*** ~~Where exceptions for alterations to qualified historic buildings or facilities are permitted by 202.5, no fewer than one toilet room for each sex complying with 603 or one unisex toilet room complying with 213.2.1 shall be provided.~~

3. Where multiple single user portable toilet or bathing units are clustered at a single location, ~~no more than~~ 5 percent*, but no fewer than one,* of the toilet units and bathing units at each cluster shall ~~be required to~~ comply with *11B*-603. Portable toilet units and bathing units complying with *11B*-603 shall be identified by the International Symbol of Accessibility complying with *11B*-703.7.2.1.

4**.** Where multiple single user toilet rooms are clustered at a single location, ~~no more than~~ 50 percent*, but no fewer than one,* of the single user toilet rooms for each use at each cluster shall ~~be required to~~ comply with *11B*-603.

5. *Where toilet and bathing rooms are provided in guest rooms that are not required to provide mobility features complying with 11B-806.2, toilet and bathing fixtures shall only be required to comply with 11B-603.6.*

***11B*-213.2.1 Unisex (Single-Use or Family) Toilet and Unisex Bathing Rooms.** Unisex toilet rooms shall contain not more than one lavatory, and *not more than* two water closets without urinals or one water closet and one urinal. Unisex bathing rooms shall contain one shower or one shower and one bathtub, one lavatory, and one water closet. Doors to unisex toilet rooms and unisex bathing rooms shall have privacy latches.

***11B-213.2.2 Unisex (Patient)Toilet Rooms in Medical Care and Long-Term Care Facilities**. Common-use unisex toilet rooms for exclusive patient use not located within patient bedrooms shall contain a lavatory and one water closet.*

***11B-213.2.3 Unisex (Patient) Bathing Rooms in Medical Care and Long-Term Care Facilities**. Common-use unisex bathing rooms for exclusive patient use not located within patient bedrooms shall contain one shower or one bathtub, one lavatory, and one water closet.*

***11B*-213.3 Plumbing Fixtures and Accessories.** Plumbing fixtures and accessories provided in a toilet room or bathing room required to comply with *11B*-213.2 shall comply with *11B*-213.3.

***11B*-213.3.1 Toilet Compartments.** Where toilet compartments are provided, at least one toilet compartment shall comply with *11B*-604.8.1. In addition to the compartment required to comply with *11B*-604.8.1, at least one compartment shall comply with *11B*-604.8.2 where six or more toilet compartments are provided, or where the combination of urinals and water closets totals six or more fixtures.

***11B*-213.3.2 Water Closets.** Where water closets are provided, at least one shall comply with *11B*-604.

***11B*-213.3.3 Urinals.** Where ~~more than one urinal is~~ *one or more urinals are* provided, at least one shall comply with *11B*-605.

***11B*-213.3.4 Lavatories.** Where lavatories are provided, at least *five percent but no fewer than* one shall comply with *11B*-606 and shall not be located in a toilet compartment.

***11B*-213.3.5 Mirrors.** Where mirrors are provided, at least one shall comply with *11B*-603.3.

***11B*-213.3.6 Bathing Facilities.** Where bathtubs or showers are provided, at least one bathtub complying with *11B*-607 or at least one shower complying with *11B*-608 shall be provided. *Where two or more accessible showers are provided within the same functional area, at least one shower shall be opposite hand from the other or others (that is, one left-hand controls versus right-hand controls).*

***11B*-213.3.7 Coat Hooks and Shelves.** Where coat hooks or shelves are provided in toilet rooms without toilet compartments, at least one of each type shall comply with *11B*-603.4. Where coat hooks or shelves are provided in toilet compartments, at least one of each type complying with *11B*-604.8.3 shall be provided in toilet compartments required to comply with *11B*-213.3.1. Where coat hooks or shelves are provided in bathing facilities, at least one of each type complying with *11B*-603.4 shall serve fixtures required to comply with *11B*-213.3.6.

***11B*-214 Washing Machines and Clothes Dryers**

***11B*-214.1 General.** Where provided, washing machines and clothes dryers shall comply with *11B*-214.

***11B*-214.2 Washing Machines.** Where three or fewer washing machines are provided, at least one shall comply with *11B*-611. Where more than three washing machines are provided, at least two shall comply with *11B*-611.

***11B*-214.3 Clothes Dryers.** Where three or fewer clothes dryers are provided, at least one shall comply with *11B*-611. Where more than three clothes dryers are provided, at least two shall comply with *11B*-611.

***11B-*215 Fire Alarm Systems**

***11B-*215.1 General.** Where fire alarm systems provide audible alarm coverage, alarms shall comply with *11B-*215.

EXCEPTION: In existing facilities, visible alarms shall not be required except where an existing fire alarm system is upgraded or replaced, or a new fire alarm system is installed.

***11B-*215.2 Public and Common Use Areas.** Alarms in public use areas and common use areas shall comply with ~~702~~ *Chapter 9, Section 907.5.2.3.1*.

***11B-*215.3 Employee Work Areas.** Where employee work areas have audible alarm coverage, the wiring system shall be designed so that visible alarms complying with ~~702~~ *Chapter 9, Section 907.5.2.3.2* can be integrated into the alarm system.

***11B-*215.4 Transient Lodging.** Guest rooms required to comply with *11B-*224.4 shall provide alarms complying with ~~702~~ *Chapter 9, Section 907.5.2.3.3*.

***11B-*215.5 Residential Facilities.** Where provided in residential dwelling units required to comply with *11B-*809.5, alarms shall comply with ~~702~~ *Chapter 9, Section 907.5.2.3.4*.

***11B-*216 Signs**

***11B-*216.1 General.** *New or altered signs* ~~Signs~~ shall be provided in accordance with *11B-*216 and shall comply with *11B-*703. *The addition of or replacement of signs shall not trigger any additional path of travel requirements.*

EXCEPTIONS: 1. Building directories, menus, seat and row designations in assembly areas, occupant names, building addresses, and company names and logos shall not be required to comply with *11B-*216.

2. In parking facilities, signs *provided solely for the operation of vehicles* shall not be required to comply with *11B-*216.2, *11B-*216.3, and *11B-*216.6 through *11B-*216.12.

3. Temporary, 7 days or less, signs shall not be required to comply with *11B-*216.

4. In detention and correctional facilities, signs not located in public use areas shall not be required to comply with *11B-*216.

***11B-*216.2 Designations.** Interior and exterior signs identifying permanent rooms and spaces shall comply with *11B-*703.1, *11B-*703.2, *11B-703.3* and *11B-*703.5. Where pictograms are provided as designations of permanent ~~interior~~ rooms and spaces, the pictograms shall comply with *11B-*703.6 and shall have text descriptors complying with *11B-*703.2 and *11B-*703.5.

EXCEPTION: Exterior signs that are not located at the door to the space they serve shall not be required to comply with *11B-*703.2.

***11B-*216.3 Directional and Informational Signs.** Signs that provide direction to or information about interior *and exterior* spaces and facilities of the site shall comply with *11B-*703.5.

***11B-*216.4 Means of Egress.** Signs for means of egress shall comply with *11B-*216.4.

***11B-*216.4.1 Exit Doors.** *Signs required by Chapter 10, Section 1011.4 at doors to* ~~Doors at~~ exit passageways, exit discharge, and exit stairways shall ~~be identified by tactile signs complying~~ *comply* with *11B-*703.1, *11B-*703.2, *11B-703.3* and *11B-*703.5.

***11B*-216.4.2 Areas of Refuge *and Exterior Areas for Assisted Rescue*.** Signs required by ~~section 1003.2.13.5.4 of the International Building Code (2000 edition) or section 1007.6.4 of the International Building Code (2003 edition) (incorporated by reference, see "Referenced Standards" in Chapter 1)~~ *Chapter 10, Section 1007.11* to provide instructions in areas of refuge shall comply with *11B*-703.5. *Signs required by Chapter 10, Section 1007.9 at doors to areas of refuge and exterior areas for assisted rescue shall comply with 11B-703.1, 11B-703.2, 11B-703.3 and 11B-703.5 and include an International Symbol of Accessibility complying with 11B-703.7.2.1.*

***11B*-216.4.3 Directional Signs.** Signs required by ~~section 1003.2.13.6 of the International Building Code (2000 edition) or section 1007.7 of the International Building Code (2003 edition) (incorporated by reference, see "Referenced Standards" in Chapter 1)~~ *Chapter 10, Section 1007.10* to provide directions to accessible means of egress shall comply with *11B*-703.5.

11B-216.4.4 Delayed Egress Locks. *Signs required by Chapter 10, Section 1008.1.9.7, item 5.1 at doors with delayed egress locks shall comply with 11B-703.1, 11B-703.2, 11B-703.3 and 11B-703.5.*

***11B*-216.5 Parking.** Parking spaces complying with *11B*-502 shall be identified by signs complying with *11B*-502.6.

EXCEPTIONS: 1. ***Reserved.*** ~~Where a total of four or fewer parking spaces, including accessible parking spaces, are provided on a site, identification of accessible parking spaces shall not be required.~~

2. In residential facilities, where parking spaces are assigned to specific residential dwelling units, identification of accessible parking spaces shall not be required.

***11B*-216.6 Entrances.** *In existing buildings and facilities where* ~~Where~~ not all entrances comply with *11B*-404, entrances complying with *11B*-404 shall be identified by the International Symbol of Accessibility complying with *11B*-703.7.2.1. Directional signs complying with *11B*-703.5 that indicate the location of the nearest entrance complying with *11B*-404 shall be provided at entrances that do not comply with *11B*-404. *Directional signs complying with 11B-703.5, including the International Symbol of Accessibility complying with 11B-703.7.2.1, indicating the accessible route to the nearest accessible entrance shall be provided at junctions when the accessible route diverges from the regular circulation path.*

EXCEPTIONS: 1. *An International Symbol of Accessibility is not required at entrances to individual rooms, suites, offices, sales or rental establishments, or other such spaces when all entrances to the building or facility are accessible and persons entering the building or facility have passed through one or more entrances with signage complying with this section.*

2. *An International Symbol of Accessibility is not required at entrances to machinery spaces frequented only by service personnel for maintenance, repair, or occasional monitoring of equipment; for example, elevator pits or elevator penthouses; mechanical, electrical or communications equipment rooms; piping or equipment catwalks; electric substations and transformer vaults; and highway and tunnel utility facilities.*

***11B*-216.7 Elevators.** Where existing elevators do not comply with *11B*-407, elevators complying with *11B*-407 shall be clearly identified with the International Symbol of Accessibility complying with *11B*-703.7.2.1. *Existing buildings that have been remodeled to provide specific elevators for public use that comply with these building standards shall have the location of and the directions to these elevators posted in the building lobby on a sign complying with 11B-703.5, including the International Symbol of Accessibility complying with 11B-703.7.2.1.*

***11B*-216.8 Toilet Rooms and Bathing Rooms.** *Doorways leading to toilet rooms and bathing rooms complying with 11B-603 shall be identified by a geometric symbol complying with 11B-703.7.2.6.* Where existing toilet rooms or bathing rooms do not comply with *11B*-603, directional signs indicating the location of the nearest toilet room or bathing room complying with *11B*-603 within the facility shall be provided. Signs shall comply with *11B*-703.5 and shall include the International Symbol of Accessibility complying

with *11B*-703.7.2.1. Where existing toilet rooms or bathing rooms do not comply with *11B*-603, the toilet rooms or bathing rooms complying with *11B*-603 shall be identified by the International Symbol of Accessibility complying with *11B*-703.7.2.1. Where clustered single user toilet rooms or bathing facilities are permitted to use exceptions to *11B*-213.2, toilet rooms or bathing facilities complying with *11B*-603 shall be identified by the International Symbol of Accessibility complying with *11B*-703.7.2.1 unless all toilet rooms and bathing facilities comply with *11B*-603. *Existing buildings that have been remodeled to provide specific toilet rooms or bathing rooms for public use that comply with these building standards shall have the location of and the directions to these rooms posted in or near the building lobby or entrance on a sign complying with 11B-703.5, including the International Symbol of Accessibility complying with 11B-703.7.2.1.*

***11B*-216.9 TTYs.** Identification and directional signs for public TTYs shall be provided in accordance with *11B*-216.9.

> ***11B*-216.9.1 Identification Signs.** Public TTYs shall be identified by the International Symbol of TTY complying with *11B*-703.7.2.2.
>
> ***11B*-216.9.2 Directional Signs.** Directional signs indicating the location of the nearest public TTY shall be provided at all banks of public pay telephones not containing a public TTY. In addition, where signs provide direction to public pay telephones, they shall also provide direction to public TTYs. *If a facility has no banks of telephones, the directional signage shall be provided at the entrance or in a building directory.* Directional signs shall comply with *11B*-703.5 and shall include the International Symbol of TTY complying with *11B*-703.7.2.2.

***11B*-216.10 Assistive Listening Systems.** Each assembly area required by *11B*-219 to provide assistive listening systems shall provide signs informing patrons of the availability of the assistive listening system. *The sign shall include wording that states "Assistive-Listening System Available" and shall be posted in a prominent place at or near the assembly area entrance.* Assistive listening signs shall comply with *11B*-703.5 and shall include the International Symbol of Access for Hearing Loss complying with *11B*-703.7.2.4.

> **EXCEPTION:** Where ticket offices or windows are provided, signs shall not be required at each assembly area provided that signs are displayed at each ticket office or window informing patrons of the availability of assistive listening systems.

***11B*-216.11 Check-Out Aisles.** Where more than one check-out aisle is provided, check-out aisles complying with *11B*-904.3 shall be identified by ~~the International Symbol of Accessibility complying with 703.7.2.1~~ *a sign complying with 11B-904.3.4*. Where check-out aisles are identified by numbers, letters, or functions, signs identifying check-out aisles complying with *11B*-904.3 shall be located in the same location as the check-out aisle identification.

> **EXCEPTION:** Where all check-out aisles ~~serving a single function~~ comply with *11B*-904.3, signs complying with *11B*-703.7.2.1 shall not be required.

***11B*-216.12 Amusement Rides.** Signs identifying the type of access provided on amusement rides shall be provided at entries to queues and waiting lines. In addition, where accessible unload areas also serve as accessible load areas, signs indicating the location of the accessible load and unload areas shall be provided at entries to queues and waiting lines. *Signs shall comply with 11B-703.5 and shall include the International Symbol of Accessibility complying with 11B-703.7.2.1.*

11B-216.13 Cleaner Air Symbol.

> ***11B-216.13.1 Use of Cleaner Air Symbol.*** *Use of the Cleaner Air Symbol is voluntary. Where publicly funded facilities or any facilities leased or rented by the State of California, not including concessionaires, comply with the conditions of use identified in 11B-216.13.3, a Cleaner Air Symbol complying with 11B-703.7.2.5 is permitted to be posted in compliance with 11B-216.3 to indicate*

rooms, facilities, and path of travels that are accessible to and usable by people who are adversely impacted by airborne chemicals or particulates and/or the use of electrical fixtures and/or devices.

11B-216.13.2 Removal of Cleaner Air Symbol. *If the path of travel, room and/or facility identified by the Cleaner Air Symbol should temporarily or permanently cease to meet the minimum conditions of use identified in 11B-216.13.3, the Cleaner Air Symbol shall be removed and shall not be replaced until the minimum conditions are again met.*

11B-216.13.3 Conditions of Use. *The Cleaner Air Symbol shall be permitted for use to identify a path of travel, and a room or a facility when the following is met:*

1. Floor or wall coverings, floor or wall covering adhesives, carpets, formaldehyde-emitting particleboard cabinetry, cupboards or doors have not been installed or replaced in the previous 12 months.

2. Incandescent lighting provided in lieu of fluorescent or halogen lighting, and electrical systems and equipment shall be operable by or on behalf of the occupant or user of the room, facility or path of travel.

3. Heating, ventilation, air conditioning and their controls shall be operable by or on behalf of the occupant or user.

4. To maintain "cleaner air" designation only nonirritating, nontoxic products will be used in cleaning, maintenance, disinfection, pest management or for any minimal touch-ups that are essential for occupancy of the area. Deodorizers or Fragrance Emission Devices and Systems (FEDS) shall not be used in the designated area. Pest control practices for cleaner air areas shall include the use of bait stations using boric acid, sticky traps and silicon caulk for sealing cracks and crevices. Areas shall be routinely monitored for pest problems. Additional nontoxic treatment methods, such as temperature extremes for termites, may be employed in the event of more urgent problems. These pest control practices shall not be used 48 hours prior to placement of the sign, and the facility shall be ventilated with outside air for a minimum of 24 hours following use or application.

5. Signage shall be posted requesting occupants or users not to smoke or wear perfumes, colognes or scented personal care products. Fragranced products shall not be used in the designated cleaner-air room, facility or path of travel.

6. A log shall be maintained on site, accessible to the public either in person or by telephone, e-mail, fax or other accessible means as requested. One or more individuals shall be designated to maintain the log. The log shall record any product or practice used in the cleaner air designated room, facility or path of travel, as well as scheduled activities, that may impact the cleaner air designation. The log shall also include the product label as well as the Material Safety Data Sheets (MSDS).

*11B-*217 Telephones

***11B-*217.1 General.** Where coin-operated public pay telephones, coinless public pay telephones, public closed-circuit telephones, public courtesy phones, or other types of public telephones are provided, public telephones shall be provided in accordance with *11B-*217 for each type of public telephone provided. For purposes of this section, a bank of telephones shall be considered to be two or more adjacent telephones.

***11B-*217.2 Wheelchair Accessible Telephones.** Where public telephones are provided, wheelchair accessible telephones complying with *11B-*704.2 shall be provided in accordance with Table *11B-*217.2.

EXCEPTION: Drive-up only public telephones shall not be required to comply with *11B-*217.2.

Table *11B-*217.2 Wheelchair Accessible Telephones

Number of Telephones Provided on a Floor, Level, or Exterior Site	Minimum Number of Required Wheelchair Accessible Telephones
1 or more single units	*At least 50 percent of telephone units, but not less than* 1 per floor, level, and exterior site
1 bank	*At least 50 percent of telephone units per bank, but not less than* 1 per floor, level, and exterior site
2 or more banks	*At least 50 percent of telephone units per bank, but not less than* 1 per bank *At least 1 telephone per floor shall meet the requirements for a forward reach telephone.*

***11B-*217.3 Volume Controls.** All public telephones shall have volume controls complying with *11B-*704.3.

***11B-*217.4 TTYs.** TTYs complying with *11B-*704.4 shall be provided in accordance with *11B-*217.4.

***11B-*217.4.1 Bank Requirement.** Where four or more public pay telephones are provided at a bank of telephones, at least one public TTY complying with *11B-*704.4 shall be provided at that bank.

EXCEPTION: ***Reserved.*** ~~TTYs shall not be required at banks of telephones located within 200 feet (61 m) of, and on the same floor as, a bank containing a public TTY.~~

***11B-*217.4.2 Floor Requirement.** TTYs in public buildings shall be provided in accordance with *11B-*217.4.2.1. TTYs in private buildings shall be provided in accordance with *11B-*217.4.2.2.

***11B-*217.4.2.1 Public Buildings.** Where at least one public pay telephone is provided on a floor of a public building, at least one public TTY shall be provided on that floor.

***11B-*217.4.2.2 Private Buildings.** Where four or more public pay telephones are provided on a floor of a private building, at least one public TTY shall be provided on that floor.

***11B-*217.4.3 Building Requirement.** TTYs in public buildings shall be provided in accordance with *11B-*217.4.3.1. TTYs in private buildings shall be provided in accordance with *11B-*217.4.3.2.

***11B-*217.4.3.1 Public Buildings.** Where at least one public pay telephone is provided in a public building, at least one public TTY shall be provided in the building. Where at least one public pay telephone is provided in a public use area of a public building, at least one public TTY shall be provided in the public building in a public use area.

***11B-*217.4.3.2 Private Buildings.** Where four or more public pay telephones are provided in a private building, at least one public TTY shall be provided in the building.

EXCEPTION: *In a stadium or arena, in a convention center, in a hotel with a convention center or in a covered mall, if an interior public pay telephone is provided at least one interior public text telephone shall be provided in the facility.*

***11B-*217.4.4 Exterior Site Requirement.** Where four or more public pay telephones are provided on an exterior site, at least one public TTY shall be provided on the site.

***11B-*217.4.5 Rest Stops, Emergency Roadside Stops, and Service Plazas.** Where at least one public pay telephone is provided at a public rest stop, emergency roadside stop, or service plaza, at least one public TTY shall be provided.

***11B-*217.4.6 Hospitals.** Where at least one public pay telephone is provided serving a hospital emergency room, hospital recovery room, or hospital waiting room, at least one public TTY shall be provided at each location.

***11B*-217.4.7 Transportation Facilities.** In transportation facilities, in addition to the requirements of *11B*-217.4.1 through *11B*-217.4.4, where at least one public pay telephone serves a particular entrance to a bus or rail facility, at least one public TTY shall be provided to serve that entrance. In airports, in addition to the requirements of *11B*-217.4.1 through *11B*-217.4.4, where four or more public pay telephones are located in a terminal outside the security areas, a concourse within the security areas, or a baggage claim area in a terminal, at least one public TTY shall be provided in each location.

***11B*-217.4.8 Detention and Correctional Facilities.** In detention and correctional facilities, where at least one pay telephone is provided in a secured area used only by detainees or inmates and security personnel, at least one TTY shall be provided in at least one secured area.

***11B*-217.5 Shelves for Portable TTYs.** Where a bank of telephones in the interior of a building consists of three or more public pay telephones, at least one public pay telephone at the bank shall be provided with a shelf and an electrical outlet in accordance with *11B*-704.5.

EXCEPTIONS: 1. Secured areas of detention and correctional facilities where shelves and outlets are prohibited for purposes of security or safety shall not be required to comply with *11B*-217.5.

2. The shelf and electrical outlet shall not be required at a bank of telephones with a TTY.

***11B*-218 Transportation Facilities**

***11B*-218.1 General.** Transportation facilities shall comply with *11B*-218.

***11B*-218.2 New and Altered Fixed Guideway Stations.** New and altered stations in rapid rail, light rail, commuter rail, intercity rail, high speed rail, and other fixed guideway systems shall comply with *11B*-810.5 through *11B*-810.10.

***11B*-218.3 Key Stations and Existing Intercity Rail Stations.** Key stations and existing intercity rail stations shall comply with *11B*-810.5 through *11B*-810.10.

***11B*-218.4 Bus Shelters.** Where provided, bus shelters shall comply with *11B*-810.3.

***11B*-218.5 Other Transportation Facilities.** In other transportation facilities, public address systems shall comply with *11B*-810.7 and clocks shall comply with *11B*-810.8.

***11B*-219 Assistive Listening Systems**

***11B*-219.1 General.** Assistive listening systems shall be provided in accordance with *11B*-219 and shall comply with *11B*-706.

***11B*-219.2 Required Systems.** ~~In each assembly area where audible communication is integral to the use of the space, an assistive listening system shall be provided.~~ *An assistive listening system shall be provided in assembly areas, including conference and meeting rooms.*

EXCEPTION: ~~Other than in courtrooms, assistive listening systems shall not be required where audio amplification is not provided.~~ *This section does not apply to systems used exclusively for paging, background music, or a combination of these two uses.*

***11B*-219.3 Receivers.** ~~Receivers complying with 706.2 shall be provided for assistive listening systems in each assembly area in accordance with Table 219.3.~~ *The minimum number of receivers to be provided shall be equal to 4 percent of the total number of seats, but in no case less than two.* Twenty-five percent minimum of receivers provided, but no fewer than two, shall be hearing-aid compatible in accordance with *11B*-706.3.

EXCEPTIONS: 1. Where a building contains more than one assembly area and the assembly areas required to provide assistive listening systems are under one management, the total number of required receivers shall be permitted to be calculated according to the total number of seats in the assembly areas in the building provided that all receivers are usable with all systems.

2. Where all seats in an assembly area are served by an induction loop assistive listening system, the minimum number of receivers required by ~~Table~~ *11B-*219.3 to be hearing-aid compatible shall not be required to be provided.

~~**Table 219.3 Receivers for Assistive Listening Systems**~~

~~**Capacity of Seating in Assembly Area**~~	~~**Minimum Number of Required Receivers**~~	~~**Minimum Number of Required Receivers Required to be Hearing-aid Compatible**~~
~~50 or less~~	~~2~~	~~2~~
~~51 to 200~~	~~2, plus 1 per 25 seats over 50 seats[1]~~	~~2~~
~~201 to 500~~	~~2, plus 1 per 25 seats over 50 seats[1]~~	~~1 per 4 receivers[1]~~
~~501 to 1000~~	~~20, plus 1 per 33 seats over 500 seats[1]~~	~~1 per 4 receivers[1]~~
~~1001 to 2000~~	~~35, plus 1 per 50 seats over 1000 seats[1]~~	~~1 per 4 receivers[1]~~
~~2001 and over~~	~~55 plus 1 per 100 seats over 2000 seats[1]~~	~~1 per 4 receivers[1]~~
~~1. Or fraction thereof.~~		

11B-219.4 Location*. If the assistive-listening system provided is limited to specific areas or seats, then such areas or seats shall be within a 50-foot (15240 mm) viewing distance of the stage or playing area and shall have a complete view of the stage or playing area.*

11B-219.5 Permanent and portable systems. *Permanently installed assistive-listening systems are required in areas if (1) they accommodate at least 50 persons or if they have audio-amplification systems, and (2) they have fixed seating. If portable assistive-listening systems are used for conference or meeting rooms, the system may serve more than one room. An adequate number of electrical outlets or other supplementary wiring necessary to support a portable assistive-listening system shall be provided.*

11B-*220 Automatic Teller Machines*, ~~and~~* Fare Machines *and Point-of-Sale Devices

***11B-*220.1 ~~General~~ *Automatic Teller Machines and Fare Machines*.** Where automatic teller machines or self-service fare vending, collection, or adjustment machines are provided~~, at least one of each type provided at each location shall comply with 707.~~ *they shall comply with 11B-220.1.* Where bins are provided for envelopes, waste paper, or other purposes, at least one of each type shall comply with *11B-*811.

11B-220.1.1 One Automatic Teller Machine or Fare Machine. *Where one automatic teller machine or fare machine is provided at a location, it shall comply with 11B-707.2 through 11B-707.8.*

11B-220.1.2 Two Automatic Teller Machines or Fare Machines. *Where two automatic teller machines or fare machines are provided at a location, one shall comply with 11B-707.2 through 11B-707.8 and one shall comply with 11B-309, 11B-707.2, 11B-707.4, 11B-707.5, 11B-707.6, 11B-707.7.2 and 11B-707.8.*

11B-220.1.3 Three or more Automatic Teller Machines or Fare Machines. *Where three or more automatic teller machines or fare machines are provided at a location, at least 50 percent shall comply with 11B-707.2 through 11B-707.8 and the rest shall comply with 11B-309, 11B-707.2, 11B-707.4,*

11B-707.5, 11B-707.6, 11B-707.7.2 and 11B-707.8.

11B-220.2 Point-of-Sale Devices. *Where point-of-sale devices are provided, all devices at each location shall comply with 11B-309.4, 11B-707.3, and 11B-707.7.2. In addition, point-of-sale systems that include a video touch screen or any other non-tactile keypad shall comply with either 11B-707.9.1.1 or 11B-707.9.1.2. Where point-of-sale devices are provided at check stands and sales and service counters, they shall comply with 11B-707.9.1, and shall also comply with 11B-707.2, 11B-707.3 and 11B-707.4.*

EXCEPTION: *Where a single point-of-sale device is installed for use with any type of motor fuel, it shall comply with 11B-220.2 and 11B-309. Where more than one point-of-sale device is installed for use with a specific type of motor fuel, a minimum of two for that type shall comply with 11B-220.2 and 11B-309. Types of motor fuel include, but are not limited to, gasoline, diesel, compressed natural gas, methanol, ethanol or electricity.*

***11B-*221 Assembly Areas**

***11B-*221.1 General.** Assembly areas shall provide wheelchair spaces, companion seats, ~~and~~ designated aisle seats *and semi-ambulant seats* complying with *11B-*221 and *11B-*802. In addition, lawn seating shall comply with *11B-*221.5.

***11B-*221.2 Wheelchair Spaces.** Wheelchair spaces complying with *11B-*221.2 shall be provided in assembly areas with fixed seating.

***11B-*221.2.1 Number and Location.** Wheelchair spaces shall be provided complying with *11B-*221.2.1.

***11B-*221.2.1.1 General Seating.** Wheelchair spaces complying with *11B-*802.1 shall be provided in accordance with Table *11B-*221.2.1.1.

Table *11B-*221.2.1.1 Number of Wheelchair Spaces in Assembly Areas

Number of Seats	Minimum Number of Required Wheelchair Spaces
4 to 25	1
26 to 50	2
51 to 150	4
151 to 300	5
301 to 500	6
501 to 5000	6, plus 1 for each ~~150~~ *100*, or fraction thereof, between 501 through 5000
5001 and over	~~36~~ *46*, plus 1 for each 200, or fraction thereof, over 5000

***11B-*221.2.1.2 Luxury Boxes, Club Boxes, and Suites in Arenas, Stadiums, and Grandstands.** In each luxury box, club box, and suite within arenas, stadiums, and grandstands, wheelchair spaces complying with *11B-*802.1 shall be provided in accordance with Table *11B-*221.2.1.1.

***11B-*221.2.1.3 Other Boxes.** In boxes other than those required to comply with *11B-*221.2.1.2, the total number of wheelchair spaces required shall be determined in accordance with Table *11B-*221.2.1.1. Wheelchair spaces shall be located in not less than 20 percent of all boxes provided. Wheelchair spaces shall comply with *11B-*802.1.

***11B-*221.2.1.4 Team or Player Seating.** At least one wheelchair space complying with *11B-*802.1 shall be provided in team or player seating areas serving areas of sport activity.

EXCEPTION: Wheelchair spaces shall not be required in team or player seating areas serving bowling lanes not required to comply with *11B-*206.2.11.

11B-221.2.1.5 Stadium-Style Movie Theaters. *In stadium-style movie theaters, the total number of wheelchair spaces required shall be determined in accordance with Table 11B-221.2.1.1. The required wheelchair spaces shall be located on risers or cross-aisles in the stadium section that satisfy at least one of the following criteria:*

1. Located within the rear 60% of the seats provided in the theater; or

2. Located within the area of the theater in which the vertical viewing angles (as measured to the top of the screen) are from the 40th to the 100th percentile of vertical viewing angles for all seats as ranked from the seats in the first row (1st percentile) to seats in the back row (100th percentile).

11B-221.2.1.6 Specialty Seating Areas. *In assembly areas, wheelchair spaces shall be provided in each specialty seating area that provides spectators with distinct services or amenities that generally are not available to other spectators. The number of wheelchair spaces provided in specialty seating areas shall be included in, rather than be in addition to, the total number of wheelchair spaces required by Table 11B-221.2.1.1.*

EXCEPTION: *In existing buildings and facilities, if it is not readily achievable for wheelchair spaces to be placed in each specialty seating area, those services or amenities shall be provided to individuals with disabilities, and their companions, at other designated accessible locations at no additional cost.*

***11B-*221.2.2 Integration.** Wheelchair spaces shall be an integral part of the seating plan.

***11B-*221.2.3 Lines of Sight and Dispersion.** Wheelchair spaces shall provide lines of sight complying with *11B-*802.2 and shall comply with *11B-*221.2.3. In providing lines of sight, wheelchair spaces shall be dispersed. Wheelchair spaces shall provide spectators with choices of seating locations and viewing angles that are substantially equivalent to, or better than, the choices of seating locations and viewing angles available to all other spectators. When the number of wheelchair spaces required by *11B-*221.2.1 has been met, further dispersion shall not be required. *In stadiums, arenas and grandstands, wheelchair spaces shall be dispersed to all levels that include seating served by an accessible route.*

EXCEPTION: Wheelchair spaces in team or player seating areas serving areas of sport activity shall not be required to comply with *11B-*221.2.3.

***11B-*221.2.3.1 Horizontal Dispersion.** Wheelchair spaces shall be dispersed horizontally. *In assembly areas that have seating encircling, in whole or in part, a field of play or performance, wheelchair spaces shall be dispersed horizontally around the field of play or performance area.*

EXCEPTIONS: 1. Horizontal dispersion shall not be required in assembly areas with 300 or fewer seats if the companion seats required by *11B-*221.3 and wheelchair spaces are located within the 2nd or 3rd quartile of the total row length. Intermediate aisles shall be included in determining the total row length. If the row length in the 2nd and 3rd quartile of a row is insufficient to accommodate the required number of companion seats and wheelchair spaces, the additional companion seats and wheelchair spaces shall be permitted to be located in the 1st and 4th quartile of the row.

2. In row seating, two wheelchair spaces shall be permitted to be located side-by-side.

***11B-*221.2.3.2 Vertical Dispersion.** Wheelchair spaces shall be dispersed vertically at varying distances from the screen, performance area, or playing field. In addition, wheelchair spaces shall be located in each balcony or mezzanine that is located on an accessible route.

EXCEPTIONS: 1. Vertical dispersion shall not be required in assembly areas with 300 or fewer seats if the wheelchair spaces provide viewing angles that are equivalent to, or better than, the average viewing angle provided in the facility.

2. In bleachers, wheelchair spaces shall not be required to be provided in rows other than rows at points of entry to bleacher seating.

11B-221.2.4 Temporary Structures. *Wheelchair spaces shall not be located on, or be obstructed by, temporary platforms or other movable structures.*

EXCEPTION: *When an entire seating section is placed on temporary platforms or other movable structures in an area where fixed seating is not provided, in order to increase seating for an event, wheelchair spaces may be placed in that section.*

11B-221.2.5 Removable Chairs. *When required wheelchair spaces are not occupied by persons eligible for those spaces, individual, removable seats may be placed in those spaces.*

***11B-*221.3 Companion Seats.** At least one companion seat complying with *11B-*802.3 shall be provided for each wheelchair space required by *11B-*221.2.1.

***11B-*221.4 Designated Aisle Seats.** At least 5 percent of the total number of aisle seats provided shall comply with *11B-*802.4 and shall be the aisle seats located closest to accessible routes.

EXCEPTION: Team or player seating areas serving areas of sport activity shall not be required to comply with *11B-*221.4.

***11B-*221.5 Lawn Seating.** Lawn seating areas and exterior overflow seating areas, where fixed seats are not provided, shall connect to an accessible route.

11B-221.6 Semi-Ambulant Seats. *At least 1 percent of the total number of seats, and no fewer than two, shall be semi-ambulant seats complying with 11B-802.5.*

***11B-*222 Dressing, Fitting, and Locker Rooms**

***11B-*222.1 General.** Where dressing rooms, fitting rooms, or locker rooms are provided, at least 5 percent, but no fewer than one, of each type of use in each cluster provided shall comply with *11B-*803.

EXCEPTION: In alterations, where it is technically infeasible to provide rooms in accordance with *11B-*222.1, one room for each sex on each level shall comply with *11B-*803. Where only unisex rooms are provided, unisex rooms shall be permitted.

***11B-*222.2 Coat Hooks and Shelves.** Where coat hooks or shelves are provided in dressing, fitting or locker rooms without individual compartments, at least one of each type shall comply with *11B-*803.5. Where coat hooks or shelves are provided in individual compartments at least one of each type complying with *11B-*803.5 shall be provided in individual compartments in dressing, fitting, or locker rooms required to comply with *11B-*222.1.

11B-222.3 Mirrors. *Where mirrors are provided in dressing, fitting or locker rooms without individual compartments, at least one of each type shall comply with 11B-803.6. Where mirrors are provided in individual compartments at least one of each type complying with 11B-803.6 shall be provided in individual compartments in dressing, fitting, or locker rooms required to comply with 11B-222.1.*

***11B-*223 Medical Care and Long-Term Care Facilities**

***11B*-223.1 General.** In licensed medical care facilities and licensed long-term care facilities where the period of stay exceeds twenty-four hours, patient *bedrooms* or resident sleeping rooms shall be provided in accordance with *11B*-223 *and 11B-805*.

EXCEPTION: Toilet rooms that are part of critical or intensive care patient sleeping rooms shall not be required to comply with *11B*-603.

***11B*-223.1.1 Alterations.** Where *patient bedrooms or resident* sleeping rooms are altered or added, the requirements of *11B*-223 shall apply only to the *patient bedrooms or resident* sleeping rooms being altered or added until the number of *patient bedrooms or resident* sleeping rooms complies with the minimum number required for new construction.

11B-223.1.1.1 Area Alterations. *Patient bedrooms or resident sleeping rooms added or altered as part of a planned renovation of an entire wing, a department, or other discrete area of an existing medical facility shall comply with 11B-805.2 until the number of patient bedrooms or resident sleeping rooms provided within the area of renovation complies with the minimum number required for new construction by 11B-223.2 or 11B-223.3.*

11B-223.1.1.2 Individual Alterations. *Patient bedrooms or resident sleeping rooms added or altered individually, and not as part of an alteration of an entire area, shall comply with 11B-805.2, until either: a) the number of patient bedrooms or resident sleeping rooms provided in the department or area containing the individually altered or added patient bedrooms or resident sleeping rooms complies with the minimum number required if the percentage requirements of 11B-223.2 or 11B-223.3 were applied to that department or area; or b) the overall number of patient bedrooms or resident sleeping rooms in the facility complies with the minimum number required for new construction by 11B-223.2 or 11B-223.3.*

11B-223.1.1.3 Toilet and Bathing Facilities. *Toilet/bathing rooms which are part of patient bedrooms added or altered and required to be accessible shall comply with 11B-805.2.4.*

***11B*-223.2 Hospitals, Rehabilitation Facilities, Psychiatric Facilities and Detoxification Facilities.** Hospitals, rehabilitation facilities, psychiatric facilities and detoxification facilities shall comply with *11B*-223.2. *All public use and common use areas shall be accessible in compliance with this chapter.*

***11B*-223.2.1 Facilities Not Specializing in Treating Conditions That Affect Mobility.** In facilities not specializing in treating conditions that affect mobility, *including hospitals, psychiatric and detoxification facilities,* at least 10 percent, but no fewer than one, of the patient *bedrooms or resident* sleeping rooms shall provide mobility features complying with *11B*-805. *Accessible patient bedrooms or resident sleeping rooms shall be dispersed in a manner that is proportionate by type of medical specialty.*

***11B*-223.2.2 Facilities Specializing in Treating Conditions That Affect Mobility.** In facilities specializing in treating conditions that affect mobility, 100 percent of the patient ~~sleeping rooms~~ *bedrooms* shall provide mobility features complying with *11B*-805.

11B-223.2.3 On-Call Rooms. *Where physician or staff on-call sleeping rooms are provided, at least 10 percent, but no fewer than one, of the on-call rooms shall provide mobility features complying with 11B-806.2.3, 11B-806.2.4 and 11B-806.2.6.*

***11B*-223.3 Long-Term Care Facilities.** In licensed long-term care facilities, *including skilled nursing facilities, intermediate care facilities and nursing homes,* at least 50 percent, but no fewer than one, of each type of *patient bedroom or* resident sleeping room shall provide mobility features complying with *11B*-805.

11B-223.4 Professional Offices of Health Care Providers. *Professional offices of health care providers*

shall comply with 11B-805.

***11B-*224 Transient Lodging Guest Rooms**

***11B-*224.1 General.** *Hotels, motels, inns, dormitories, resorts and similar transient* ~~Transient~~ lodging facilities shall provide guest rooms in accordance with *11B-*224.

***11B-*224.1.1 Alterations.** Where guest rooms are altered or added, the requirements of *11B-*224 shall apply only to the guest rooms being altered or added until the number of guest rooms complies with the minimum number required for new construction.

***11B-*224.1.2 Guest Room Doors and Doorways.** Entrances, doors, and doorways providing user passage into and within guest rooms that are not required to provide mobility features complying with *11B-*806.2 shall comply with *11B-*404.2.3. *Bathrooms doors shall be either sliding or hung to swing in the direction of egress from the bathroom.*

EXCEPTION: Shower and sauna doors in guest rooms that are not required to provide mobility features complying with *11B-*806.2 shall not be required to comply with *11B-*404.2.3.

11B-224.1.3 Range of Accommodations. *Accessible guest rooms or suites shall be dispersed among the various classes of sleeping accommodations to provide a range of options applicable to room sizes, costs, and amenities provided.*

11B-224.1.4 Housing at a Place of Education. *Housing at a place of education subject to this section shall comply with 11B-224 and 11B-806 for transient lodging guest rooms. For the purposes of the application of this section, the term "sleeping room" is interchangeable with "guest room" as used in the transient lodging standards.*

EXCEPTIONS: 1. *Kitchens within housing units containing accessible sleeping rooms with mobility features (including suites and clustered sleeping rooms) or on floors containing accessible sleeping rooms with mobility features shall provide turning spaces that comply with 11B-809.2.2 and kitchen work surfaces that comply with 11B-804.3.*

2. *Multi-bedroom housing units containing accessible sleeping rooms with mobility features shall have an accessible route throughout the unit in compliance with 11B-809.2.*

3. *Residential dwelling units that are provided by or on behalf of a place of education, which are leased on a year round basis exclusively to graduate students or faculty, and do not contain any public use or common use areas available for educational programming, are not subject to the transient lodging standards and shall comply with 11B-233 and 11B-809.*

11B-224.1.5 Social Service Center Establishments. *Group homes, halfway houses, shelters, or similar social service center establishments that provide either temporary sleeping accommodations or residential dwelling units subject to this section shall comply with this chapter.*

11B-224.1.5.1 More Than Twenty-Five Bed Sleeping Rooms. *In sleeping rooms with more than twenty-five beds, a minimum of 5 percent of the beds shall have clear floor space complying with 11B-806.2.3.*

11B-224.1.5.2 More Than Fifty Bed Facilities. *Facilities with more than fifty beds that provide common use bathing facilities, shall provide at least one roll-in shower with a seat that complies with 11B-608. When separate shower facilities are provided for men and women, at least one roll-in shower shall be provided for each group.*

11B-224.1.6 Guest Room Toilet and Bathing Rooms. *Where toilet and bathing rooms are provided in guest rooms that are not required to provide mobility features complying with 11B-806.2, toilet and bathing fixtures shall only be required to comply with 11B-603.6.*

***11B*-224.2 Guest Rooms with Mobility Features.** In transient lodging facilities, guest rooms with mobility features complying with *11B*-806.2 shall be provided in accordance with Table *11B*-224.2*, as follows*.

11B-224.2.1 Fifty or Less Guest Room Facilities. *Facilities that are subject to the same permit application on a common site that each have 50 or fewer guest rooms may be combined for the purposes of determining the required number of accessible rooms and type of accessible bathing facility.*

11B-224.2.2 More than Fifty Guest Room Facilities. *Facilities with more than 50 guest rooms shall be treated separately for the purposes of determining the required number of accessible rooms and type of accessible bathing facility.*

Table *11B*-224.2 Guest Rooms with Mobility Features

Total Number of Guest Rooms Provided	Minimum Number of Required Rooms Without Roll-in Showers	Minimum Number of Required Rooms With Roll-in Showers	Total Number of Required Rooms
1 to 25	~~1~~ *0*	~~0~~ *1*	1
26 to 50	~~2~~ *1*	~~0~~ *1*	2
51 to 75	3	1	4
76 to 100	4	1	5
101 to 150	5	2	7
151 to 200	6	2	8
201 to 300	7	3	10
301 to 400	8	4	12
401 to 500	9	4	13
501 to 1000	2 percent of total	1 percent of total	3 percent of total
1001 and over	20, plus 1 for each 100, or fraction thereof, over 1000	10, plus 1 for each 100, or fraction thereof, over 1000	30, plus 2 for each 100, or fraction thereof, over 1000

***11B*-224.3 Beds.** In guest rooms having more than 25 beds, 5 percent minimum of the beds shall have clear floor space complying with *11B*-806.2.3.

***11B*-224.4 Guest Rooms with Communication Features.** In transient lodging facilities, guest rooms with communication features complying with *11B*-806.3 shall be provided in accordance with Table *11B*-224.4.

Table *11B*-224.4 Guest Rooms with Communication Features

Total Number of Guest Rooms Provided	Minimum Number of Required Guest Rooms With Communication Features
1	1
2 to 25	2
26 to 50	4
51 to 75	7
76 to 100	9
101 to 150	12
151 to 200	14
201 to 300	17
301 to 400	20
401 to 500	22
501 to 1000	5 percent of total
1001 and over	50, plus 3 for each 100 over 1000

***11B*-224.5 Dispersion.** Guest rooms required to provide mobility features complying with *11B*-806.2 and guest rooms required to provide communication features complying with *11B*-806.3 shall be dispersed among the various classes of guest rooms, and shall provide choices of types of guest rooms, number of beds, and other amenities comparable to the choices provided to other guests. Where the minimum number of guest rooms required to comply with *11B*-806 is not sufficient to allow for complete dispersion, guest rooms shall be dispersed in the following priority: guest room type, number of beds, and amenities. At least one guest room required to provide mobility features complying with *11B*-806.2 shall also provide communication features complying with *11B*-806.3. Not more than 10 percent of guest rooms required to provide mobility features complying with *11B*-806.2 shall be used to satisfy the minimum number of guest rooms required to provide communication features complying with *11B*-806.3.

11B-224.6 Storage. *Fixed or built-in storage facilities within guest rooms required to provide mobility features shall comply with 11B-225.*

***11B*-225 Storage**

***11B*-225.1 General.** Storage facilities shall comply with *11B*-225.

***11B*-225.2 Storage.** Where storage is provided in accessible spaces, at least one of each type shall comply with *11B*-811.

***11B*-225.2.1 Lockers.** Where lockers are provided, at least 5 percent, but no fewer than one of each type, shall comply with *11B*-811.

***11B*-225.2.2 Self-Service Shelving.** Self-service shelves shall be located on an accessible route complying with *11B*-402. Self-service shelving shall not be required to comply with *11B*-308.

11B-225.2.3 Library Book Stacks. *Book stacks available for public use shall be 54 inches (1372 mm) maximum above the finish floor.*

EXCEPTIONS: 1. *Book stacks available for public use may be higher than 54 inches (1372 mm) maximum above the finish floor when an attendant is available to assist persons with disabilities.*

2. *Book stacks restricted to employee use are not required to comply with these requirements.*

***11B*-225.3 Self-Service Storage Facilities.** Self-service storage facilities shall provide individual self-service storage spaces complying with these requirements in accordance with Table *11B*-225.3.

Table *11B*-225.3 Self-Service Storage Facilities

Total Spaces in Facility	Minimum Number of Spaces Required to be Accessible
1 to 200	5 percent, but no fewer than 1
201 and over	10, plus 2 percent of total number of units over 200

***11B*-225.3.1 Dispersion.** Individual self-service storage spaces shall be dispersed throughout the various classes of spaces provided. Where more classes of spaces are provided than the number required to be accessible, the number of spaces shall not be required to exceed that required by Table *11B*-225.3. Self-service storage spaces complying with Table *11B*-225.3 shall not be required to be dispersed among buildings in a multi-building facility.

***11B*-226 Dining Surfaces and Work Surfaces**

***11B*-226.1 General.** Where dining surfaces are provided for the consumption of food or drink, at least 5 percent of the seating spaces and standing spaces at the dining surfaces shall comply with *11B*-902. In addition, where work surfaces are provided for use by other than employees, at least 5 percent shall comply with *11B*-902.

EXCEPTIONS: 1. Sales counters and service counters shall not be required to comply with *11B*-902. *See 11B-227.*

2. Check writing surfaces provided at check-out aisles not required to comply with *11B*-904.3 shall not be required to comply with *11B*-902.

***11B*-226.2 Dispersion.** Dining surfaces ~~and work surfaces~~ required to comply with *11B*-902 shall be dispersed throughout the space or facility containing dining surfaces ~~and work surfaces~~ *for each type of seating in a functional area. Work surfaces required to comply with 11B-902 shall be dispersed throughout the space or facility containing work surfaces.*

11B-226.3 Dining Surfaces Exceeding 34 Inches in Height. *Where food or drink is served for consumption at a counter exceeding 34 inches (864 mm) in height, a portion of the main counter 60 inches (1525 mm) minimum in length shall be provided in compliance with 11B-902.3.*

***11B*-227 Sales and Service**

***11B*-227.1 General.** Where provided, check-out aisles, sales counters, service counters, food service lines, queues, and waiting lines shall comply with *11B*-227 and *11B*-904.

***11B*-227.2 Check-Out Aisles.** Where check-out aisles are provided, check-out aisles complying with *11B*-904.3 shall be provided in accordance with Table *11B*-227.2. Where check-out aisles serve different functions, check-out aisles complying with *11B*-904.3 shall be provided in accordance with Table *11B*-227.2 for each function. Where check-out aisles are dispersed throughout the building or facility, check-out aisles complying with *11B*-904.3 shall be dispersed. *When check-out aisles are open for customer use, a minimum of one accessible check-out aisle shall always be available. As check-out aisles are opened and closed based on fluctuating customer levels, the number of accessible check-out aisles available shall comply with Table 11B-227.2. When not all check-out aisles are accessible, accessible check-out aisles shall be identified by a sign complying with 11B-904.3.4.*

EXCEPTION: *In existing buildings, where* ~~Where~~ the selling space is under 5000 square feet (465 m^2) no more than one check-out aisle complying with *11B*-904.3 shall be required.

Table *11B*-227.2 Check-Out Aisles

Number of Check-Out Aisles of Each Function	Minimum Number of Check-Out Aisles of Each Function Required to Comply with *11B*-904.3
1 to 4	1
5 to 8	2
9 to 15	3
16 and over	3, plus 20 percent of additional aisles

***11B*-227.2.1 Altered Check-Out Aisles.** Where check-out aisles are altered, at least one of each check-out aisle serving each function shall comply with *11B*-904.3 until the number of check-out aisles complies with *11B*-227.2.

***11B*-227.3 Counters.** Where provided, at least one of each type of sales counter and service counter shall comply with *11B*-904.4. Where counters are dispersed throughout the building or facility, counters complying with *11B*-904.4 also shall be dispersed.

***11B*-227.4 Food Service Lines.** Food service lines shall comply with *11B*-904.5. Where self-service shelves are provided, at least 50 percent, but no fewer than one, of each type provided shall comply with *11B*-308.

***11B*-227.5 Queues and Waiting Lines.** Queues and waiting lines servicing counters or check-out aisles required to comply with *11B*-904.3 or *11B*-904.4 shall comply with *11B*-403.

***11B*-228 Depositories, Vending Machines, Change Machines, Mail Boxes, and Fuel Dispensers**

***11B*-228.1 General.** Where provided, at least one of each type of depository, vending machine, change machine, and fuel dispenser shall comply with *11B*-309.

EXCEPTION: Drive-up only depositories shall not be required to comply with *11B*-309.

***11B*-228.2 Mail Boxes.** Where mail boxes are provided in an interior location, at least 5 percent, but no fewer than one, of each type shall comply with *11B*-309. In residential facilities, where mail boxes are provided for each residential dwelling unit, mail boxes complying with *11B*-309 shall be provided for each residential dwelling unit required to provide mobility features complying with *11B*-809.2 through *11B*-809.4 *and adaptable features complying with Chapter 11A, Division IV*.

***11B*-229 Windows**

***11B*-229.1 General.** Where glazed openings are provided in accessible rooms or spaces for operation by occupants, at least one opening shall comply with *11B*-309. Each glazed opening required by an administrative authority to be operable shall comply with *11B*-309.

EXCEPTION: 1. Glazed openings in residential dwelling units required to comply with *11B*-809 shall not be required to comply with *11B*-229.

2. Glazed openings in guest rooms required to provide communication features and in guest rooms required to comply with *11B*-206.5.3 shall not be required to comply with *11B*-229.

***11B*-230 Two-Way Communication Systems**

***11B*-230.1 General.** Where a two-way communication system is provided to gain admittance to a building or facility or to restricted areas within a building or facility, the system shall comply with *11B*-708.

***11B*-231 Judicial Facilities**

***11B*-231.1 General.** Judicial facilities shall comply with *11B*-231.

***11B*-231.2 Courtrooms.** Each courtroom shall comply with *11B*-808.

***11B*-231.3 Holding Cells.** Where provided, central holding cells and court-floor holding cells shall comply with *11B*-231.3.

***11B*-231.3.1 Central Holding Cells.** Where separate central holding cells are provided for adult male, juvenile male, adult female, or juvenile female, one of each type shall comply with *11B*-807.2. Where central holding cells are provided and are not separated by age or sex, at least one cell complying with *11B*-807.2 shall be provided.

***11B*-231.3.2 Court-Floor Holding Cells.** Where separate court-floor holding cells are provided for adult male, juvenile male, adult female, or juvenile female, each courtroom shall be served by one cell of each type complying with *11B*-807.2. Where court-floor holding cells are provided and are not separated by age or sex, courtrooms shall be served by at least one cell complying with *11B*-807.2. Cells may serve more than one courtroom.

***11B*-231.4 Visiting Areas.** Visiting areas shall comply with *11B*-231.4.

***11B*-231.4.1 Cubicles and Counters.** At least 5 percent, but no fewer than one, of cubicles shall comply with *11B*-902 on both the visitor and detainee sides. Where counters are provided, at least one shall comply with *11B*-904.4.2 on both the visitor and detainee sides.

EXCEPTION: The detainee side of cubicles or counters at non-contact visiting areas not serving holding cells required to comply with *11B*-231 shall not be required to comply with *11B*-902 or *11B*-904.4.2.

***11B*-231.4.2 Partitions.** Where solid partitions or security glazing separate visitors from detainees at least one of each type of cubicle or counter partition shall comply with *11B*-904.6.

***11B*-232 Detention Facilities and Correctional Facilities**

***11B*-232.1 General.** Buildings, facilities, or portions thereof, in which people are detained for penal or correction purposes, or in which the liberty of the inmates is restricted for security reasons shall comply with *11B*-232.

***11B*-232.2 General Holding Cells and General Housing Cells.** General holding cells and general housing cells shall be provided in accordance with *11B*-232.2.

EXCEPTION: ***Reserved.*** ~~Alterations to cells shall not be required to comply except to the extent determined by the Attorney General.~~

***11B*-232.2.1 Cells with Mobility Features.** At least ~~2 percent~~ *3 percent*, but no fewer than one, of the total number of cells in a facility shall provide mobility features complying with *11B*-807.2.

***11B*-232.2.1.1 Beds.** In cells having more than 25 beds, at least 5 percent of the beds shall have clear floor space complying with *11B*-807.2.3.

11B-232.2.1.2 Dispersion. *Cells with mobility features shall be provided in each classification level.*

11B-232.2.1.3 Substitute Cells. *When alterations are made to specific cells, detention and correctional facility operators may satisfy their obligation to provide the required number of cells with mobility features by providing the required mobility features in substitute cells (cells other than those where alterations are originally planned), provided that each substitute cell meets the following conditions:*

1. Located within the same prison site.

2. Integrated with the other cells to the maximum extent feasible.

3. Has equal physical access as the altered cells to areas used by inmates or detainees for visitation, dining, recreation, educational programs, medical services, work programs, religious services, and participation in other programs that the facility offers to inmates or detainees.

11B-232.2.1.4 Technically Infeasible*. Where it is technically infeasible to locate a substitute cell within the same prison site in compliance with 11B-232.2.1.3, a substitute cell shall be provided at another prison site within the correctional system.*

***11B*-232.2.2 Cells with Communication Features.** At least 2 percent, but no fewer than one, of the total number of general holding cells and general housing cells equipped with audible emergency alarm systems and permanently installed telephones within the cell shall provide communication features complying with *11B*-807.3.

***11B*-232.3 Special Holding Cells and Special Housing Cells.** Where special holding cells or special housing cells are provided, at least one cell serving each purpose shall provide mobility features complying with *11B*-807.2. Cells subject to this requirement include, but are not limited to, those used for purposes of orientation, protective custody, administrative or disciplinary detention or segregation, detoxification, and medical isolation.

EXCEPTION: ***Reserved.*** ~~Alterations to cells shall not be required to comply except to the extent determined by the Attorney General.~~

11B-**232.4 Medical Care Facilities.** Patient bedrooms or cells required to comply with *11B-*223 shall be provided in addition to any medical isolation cells required to comply with *11B-*232.3.

11B-**232.5 Visiting Areas.** Visiting areas shall comply with *11B-*232.5.

11B-**232.5.1 Cubicles and Counters.** At least 5 percent, but no fewer than one, of cubicles shall comply with *11B-*902 on both the visitor and detainee sides. Where counters are provided, at least one shall comply with *11B-*904.4.2 on both the visitor and detainee or inmate sides.

EXCEPTION: The inmate or detainee side of cubicles or counters at non-contact visiting areas not serving holding cells or housing cells required to comply with *11B-*232 shall not be required to comply with *11B-*902 or *11B-*904.4.2.

11B-**232.5.2 Partitions.** Where solid partitions or security glazing separate visitors from detainees or inmates at least one of each type of cubicle or counter partition shall comply with *11B-*904.6.

11B-**233 Residential Facilities**

11B-**233.1 General.** *Public housing facilities* ~~Facilities~~ with residential dwelling units *available for public use* with shall comply with *11B-*233. *See Chapter 2, Section 202 of this code for the definition of Public Housing.*

11B-**233.2 Residential Dwelling Units Provided by Entities Subject to HUD Section 504 Regulations.** Where *public housing* facilities with residential dwelling units are provided by entities subject to regulations issued by the Department of Housing and Urban Development (HUD) under Section 504 of the Rehabilitation Act of 1973, as amended, such entities shall provide residential dwelling units with mobility features complying with *11B-*809.2 through *11B-*809.4 in a number required by the applicable HUD regulations. Residential dwelling units required to provide mobility features complying with *11B-* 809.2 through *11B-*809.4 shall be on an accessible route as required by *11B-*206. In addition, such entities shall provide residential dwelling units with communication features complying with *11B-*809.5 in a number required by the applicable HUD regulations. Entities subject to *11B-*233.2 shall not be required to comply with *11B-*233.3.

11B-**233.3 Residential Dwelling Units Provided by Entities Not Subject to HUD Section 504 Regulations.** *Public housing facilities* ~~Facilities~~ with residential dwelling units provided by entities not subject to regulations issued by the Department of Housing and Urban Development (HUD) under Section 504 of the Rehabilitation Act of 1973, as amended, shall comply with *11B-*233.3.

11B-**233.3.1 Minimum Number: New Construction.** Newly constructed *public housing* facilities with residential dwelling units shall comply with *11B-*233.3.1.

EXCEPTION: Where facilities contain 15 or fewer residential dwelling units, the requirements of *11B-*233.3.1.1 and ~~233.3.1.2~~ *11B-233.3.1.3* shall apply to the total number of residential dwelling units that are constructed under a single contract, or are developed as a whole, whether or not located on a common site.

11B-**233.3.1.1 Residential Dwelling Units with Mobility Features.** In *public housing* facilities with residential dwelling units, at least 5 percent, but no fewer than one unit, of the total number of residential dwelling units shall provide mobility features complying with *11B-*809.2 through *11B-*809.4 and shall be on an accessible route as required by *11B-*206.

11B-233.3.1.2 Residential Dwelling Units with Adaptable Features. *In public housing facilities with residential dwelling units, adaptable residential dwelling units complying with Chapter 11A,*

Division IV – Dwelling Unit Features shall be provided as required by 11B-233.3.1.2.1 through 11B-233.3.1.2.5. Adaptable residential dwelling units shall be on an accessible route as required by 11B-206.

EXCEPTION: *The number of required adaptable residential dwelling units shall be reduced by the number of units required by 11B-233.3.1.1.*

11B-233.3.1.2.1 Elevator Buildings. *Residential dwelling units on floors served by an elevator shall be adaptable.*

11B-233.3.1.2.2 Non-Elevator Buildings. *Ground floor residential dwelling units in non-elevator buildings shall be adaptable.*

11B-233.3.1.2.3 Ground Floors Above Grade. *Where the first floor in a building containing residential dwelling units is a floor above grade, all units on that floor shall be adaptable.*

11B-233.3.1.2.4. Multi-Story Residential Dwelling Units. *In elevator buildings, public housing facilities with multi-story residential dwelling units shall comply with the following:*

EXCEPTION: *In non-elevator buildings, a minimum of 10 percent but not less than one of the ground floor multi-story residential dwelling units shall comply with 11B-233.3.1.2.4, calculated using the total number of multi-story residential dwelling units in buildings on a site.*

1. The primary entry of the multi-story residential dwelling unit shall be on an accessible route. In buildings with elevators the primary entry shall be on the floor served by the elevator.

2. At least one powder room or bathroom shall be located on the primary entry level.

3. Rooms or spaces located on the primary entry level shall be served by an accessible route and comply with Chapter 11A, Division IV – Dwelling Unit Features.

11B-233.3.1.2.5 Public Housing Facility Site Impracticality. *The number of adaptable residential dwelling units required in non-elevator building public housing facilities shall be determined in accordance with Chapter 11A, Section 1150A.1. The remaining ground floor residential dwelling units shall comply with the following requirements:*

1. Grab bar reinforcement complying with 11B-609.

2. Doors complying with 11B-404.

3. Communication features complying with 11B-809.5.5.

4. Electrical receptacle and switches complying with 11B-308.1.

5. Toilet and bathing facilities complying with 11B-809.4.

6. Kitchen sink removable cabinets complying with 11B-606.2, Exception 3.

~~**233.3.1.2**~~ ***11B-233.3.1.3*** **Residential Dwelling Units with Communication Features.** In *public housing* facilities with residential dwelling units, at least 2 percent, but no fewer than one unit, of the total number of residential dwelling units shall provide communication features complying with *11B-*809.5.

***11B-*233.3.2 Residential Dwelling Units for Sale.** Residential dwelling units *designed and constructed or altered by public entities that will be* offered for sale *to individuals* shall provide accessible features to the extent required by ~~regulations issued by Federal agencies under the~~

~~Americans with Disabilities Act or Section 504 of the Rehabilitation Act of 1973, as amended.~~ *this chapter.*

Exception: *Existing residential dwellings or residential dwelling units acquired by public entities that will be offered for resale to individuals without additions or alterations shall not be required to comply with this chapter.*

11B-**233.3.3 Additions.** Where an addition to an existing *public housing facility* ~~building~~ results in an increase in the number of residential dwelling units, the requirements of *11B-*233.3.1 shall apply only to the residential dwelling units that are added until the total number of residential dwelling units complies with the minimum number required by *11B-*233.3.1. Residential dwelling units required to comply with *11B-*233.3.1.1 *and 11B-233.3.1.2* shall be on an accessible route as required by *11B-*206.

11B-**233.3.4 Alterations.** Alterations *to a public housing facility* shall comply with *11B-*233.3.4.

EXCEPTION: Where compliance with *11B-*809.2, *11B-*809.3, or *11B-*809.4 is technically infeasible, or where it is technically infeasible to provide an accessible route to a residential dwelling unit, the entity shall be permitted to alter or construct a comparable residential dwelling unit to comply with *11B-*809.2 through *11B-*809.4 provided that the minimum number of residential dwelling units required by *11B-*233.3.1.1, ~~and~~ *11B-*233.3.1.2 *and 11B-233.3.1.3*, as applicable, is satisfied.

11B-**233.3.4.1 Alterations to Vacated Buildings.** Where a building is vacated for the purposes of alteration *for use as public housing*, and the altered building contains more than 15 residential dwelling units, at least 5 percent of the residential dwelling units shall comply with *11B-*809.2 through *11B-*809.4 and shall be on an accessible route as required by *11B-*206. *Residential dwelling units with adaptable features shall be provided in compliance with 11B-233.3.1.2.* In addition, at least 2 percent of the residential dwelling units shall comply with *11B-*809.5.

EXCEPTION: *Where any portion of a building's exterior is preserved, but the interior of the building is removed, including all structural portions of floors and ceilings and a new building intended for use as public housing is constructed behind the existing exterior, the building is considered a new building for determining the application of this chapter.*

11B-**233.3.4.2 Alterations to Individual Residential Dwelling Units.** In *public housing facilities with* individual residential dwelling units, where a bathroom or a kitchen is substantially altered, and at least one other room is altered, the requirements of *11B-*233.3.1 shall apply to the altered residential dwelling units until the total number of residential dwelling units complies with the minimum number required by *11B-*233.3.1.1, ~~and~~ *11B-*233.3.1.2, and *11B-233.3.1.3.* Residential dwelling units required to comply with *11B-*233.3.1.1 *and 11B-233.3.1.2* shall be on an accessible route as required by *11B-*206.

EXCEPTION: Where *public housing* facilities contain 15 or fewer residential dwelling units, the requirements of *11B-*233.3.1.1, ~~and~~ *11B-*233.3.1.2, *and 11B-233.3.1.3.* shall apply to the total number of residential dwelling units that are altered under a single contract, or are developed as a whole, whether or not located on a common site.

11B-**233.3.5 Dispersion.** *In public housing facilities, residential* ~~Residential~~ dwelling units required to provide mobility features complying with *11B-*809.2 through *11B-*809.4 and residential dwelling units required to provide communication features complying with *11B-*809.5, *and adaptable features complying with Chapter 11A, Division IV* shall be dispersed among the various types of residential dwelling units in the facility and shall provide choices of residential dwelling units comparable to, and integrated with, those available to other residents.

EXCEPTION: *In public housing facilities where* ~~Where~~ multi-story residential dwelling units are one of the types of residential dwelling units provided, one-story residential dwelling units shall be

permitted as a substitute for multi-story residential dwelling units where equivalent spaces and amenities are provided in the one-story residential dwelling unit.

11B-233.3.6 Graduate Student and Faculty Housing at a Place of Education. *Residential dwelling units that are provided by or on behalf of a place of education, which are leased on a year round basis exclusively to graduate students or faculty, and do not contain any public use or common use areas available for educational programming, are not subject to 11B-224 and shall comply with 11B-233 and 11B-809.*

***11B-*234 Amusement Rides**

***11B-*234.1 General.** Amusement rides shall comply with *11B-*234.

EXCEPTION: Mobile or portable amusement rides shall not be required to comply with *11B-*234.

***11B-*234.2 Load and Unload Areas.** Load and unload areas serving amusement rides shall comply with *11B-*1002.3.

***11B-*234.3 Minimum Number.** Amusement rides shall provide at least one wheelchair space complying with *11B-*1002.4, or at least one amusement ride seat designed for transfer complying with *11B-*1002.5, or at least one transfer device complying with *11B-*1002.6.

EXCEPTIONS: 1. Amusement rides that are controlled or operated by the rider shall not be required to comply with *11B-*234.3.

2. Amusement rides designed primarily for children, where children are assisted on and off the ride by an adult, shall not be required to comply with *11B-*234.3.

3. Amusement rides that do not provide amusement ride seats shall not be required to comply with *11B-*234.3.

***11B-*234.4 Existing Amusement Rides.** Where existing amusement rides are altered, the alteration shall comply with *11B-*234.4.

***11B-*234.4.1 Load and Unload Areas.** Where load and unload areas serving existing amusement rides are newly designed and constructed, the load and unload areas shall comply with *11B-*1002.3.

***11B-*234.4.2 Minimum Number.** Where the structural or operational characteristics of an amusement ride are altered to the extent that the amusement ride's performance differs from that specified by the manufacturer or the original design, the amusement ride shall comply with *11B-*234.3.

***11B-*235 Recreational Boating Facilities**

***11B-*235.1 General.** Recreational boating facilities shall comply with *11B-*235.

***11B-*235.2 Boat Slips.** Boat slips complying with *11B-*1003.3.1 shall be provided in accordance with Table *11B-*235.2. Where the number of boat slips is not identified, each 40 feet (~~12 m~~ *12192 mm*) of boat slip edge provided along the perimeter of the pier shall be counted as one boat slip for the purpose of this section.

Table *11B-*235.2 Boat Slips

Total Number of Boat Slips Provided in Facility	Minimum Number of Required Accessible Boat Slips
1 to 25	1
26 to 50	2
51 to 100	3

101 to 150	4
151 to 300	5
301 to 400	6
401 to 500	7
501 to 600	8
601 to 700	9
701 to 800	10
801 to 900	11
901 to 1000	12
1001 and over	12, plus 1 for every 100, or fraction thereof, over 1000

***11B*-235.2.1 Dispersion.** Boat slips complying with *11B*-1003.3.1 shall be dispersed throughout the various types of boat slips provided. Where the minimum number of boat slips required to comply with *11B*-1003.3.1 has been met, no further dispersion shall be required.

***11B*-235.3 Boarding Piers at Boat Launch Ramps.** Where boarding piers are provided at boat launch ramps, at least 5 percent, but no fewer than one, of the boarding piers shall comply with *11B*-1003.3.2.

***11B*-236 Exercise Machines and Equipment**

***11B*-236.1 General.** At least one of each type of exercise machine and equipment shall comply with *11B*-1004.

***11B*-237 Fishing Piers and Platforms**

***11B*-237.1 General.** Fishing piers and platforms shall comply with *11B*-1005.

***11B*-238 Golf Facilities**

***11B*-238.1 General.** Golf facilities shall comply with *11B*-238.

***11B*-238.2 Golf Courses.** Golf courses shall comply with *11B*-238.2.

***11B*-238.2.1 Teeing Grounds.** Where one teeing ground is provided for a hole, the teeing ground shall be designed and constructed so that a golf car can enter and exit the teeing ground. Where two teeing grounds are provided for a hole, the forward teeing ground shall be designed and constructed so that a golf car can enter and exit the teeing ground. Where three or more teeing grounds are provided for a hole, at least two teeing grounds, including the forward teeing ground, shall be designed and constructed so that a golf car can enter and exit each teeing ground.

EXCEPTION: In existing golf courses, the forward teeing ground shall not be required to be one of the teeing grounds on a hole designed and constructed so that a golf car can enter and exit the teeing ground where compliance is not feasible due to terrain.

***11B*-238.2.2 Putting Greens.** Putting greens shall be designed and constructed so that a golf car can enter and exit the putting green.

***11B*-238.2.3 Weather Shelters.** Where provided, weather shelters shall be designed and constructed so that a golf car can enter and exit the weather shelter and shall comply with *11B*-1006.4.

***11B*-238.3 Practice Putting Greens, Practice Teeing Grounds, and Teeing Stations at Driving Ranges.** At least 5 percent, but no fewer than one, of practice putting greens, practice teeing grounds, and teeing stations at driving ranges shall be designed and constructed so that a golf car can enter and exit the practice putting greens, practice teeing grounds, and teeing stations at driving ranges.

***11B*-239 Miniature Golf Facilities**

***11B*-239.1 General.** Miniature golf facilities shall comply with *11B*-239.

***11B*-239.2 Minimum Number.** At least 50 percent of holes on miniature golf courses shall comply with *11B*-1007.3.

***11B*-239.3 Miniature Golf Course Configuration.** Miniature golf courses shall be configured so that the holes complying with *11B*-1007.3 are consecutive. Miniature golf courses shall provide an accessible route from the last hole complying with *11B*-1007.3 to the course entrance or exit without requiring travel through any other holes on the course.

EXCEPTION: One break in the sequence of consecutive holes shall be permitted provided that the last hole on the miniature golf course is the last hole in the sequence.

***11B*-240 Play Areas**

***11B*-240.1 General.** Play areas for children ages 2 and over shall comply with *11B*-240. Where separate play areas are provided within a site for specific age groups, each play area shall comply with *11B*-240.

EXCEPTIONS: 1. Play areas located in family child care facilities where the proprietor actually resides shall not be required to comply with *11B*-240.

2. In existing play areas, where play components are relocated for the purposes of creating safe use zones and the ground surface is not altered or extended for more than one use zone, the play area shall not be required to comply with *11B*-240.

3. Amusement attractions shall not be required to comply with *11B*-240.

4. Where play components are altered and the ground surface is not altered, the ground surface shall not be required to comply with *11B*-1008.2.6 unless required by *11B*-202.4.

***11B*-240.1.1 Additions.** Where play areas are designed and constructed in phases, the requirements of *11B*-240 shall apply to each successive addition so that when the addition is completed, the entire play area complies with all the applicable requirements of *11B*-240.

***11B*-240.2 Play Components.** Where provided, play components shall comply with *11B*-240.2.

***11B*-240.2.1 Ground Level Play Components.** Ground level play components shall be provided in the number and types required by *11B*-240.2.1. Ground level play components that are provided to comply with *11B*-240.2.1.1 shall be permitted to satisfy the additional number required by *11B*-240.2.1.2 if the minimum required types of play components are satisfied. Where two or more required ground level play components are provided, they shall be dispersed throughout the play area and integrated with other play components.

***11B*-240.2.1.1 Minimum Number and Types.** Where ground level play components are provided, at least one of each type shall be on an accessible route and shall comply with *11B*-1008.4.

***11B*-240.2.1.2 Additional Number and Types.** Where elevated play components are provided, ground level play components shall be provided in accordance with Table *11B*-240.2.1.2 and shall comply with *11B*-1008.4.

EXCEPTION: If at least 50 percent of the elevated play components are connected by a ramp and at least 3 of the elevated play components connected by the ramp are different types of play components, the play area shall not be required to comply with *11B*-240.2.1.2.

Table *11B*-240.2.1.2 Number and Types of Ground Level Play

Components Required to be on Accessible Routes

Number of Elevated Play Components Provided	Minimum Number of Ground Level Play Components Required to be on an Accessible Route	Minimum Number of Different Types of Ground Level Play Components Required to be on an Accessible Route
1	Not applicable	Not applicable
2 to 4	1	1
5 to 7	2	2
8 to 10	3	3
11 to 13	4	3
14 to 16	5	3
17 to 19	6	3
20 to 22	7	4
23 to 25	8	4
26 and over	8, plus 1 for each additional 3, or fraction thereof, over 25	5

***11B*-240.2.2 Elevated Play Components.** Where elevated play components are provided, at least 50 percent shall be on an accessible route and shall comply with *11B*-1008.4.

***11B*-241 Saunas and Steam Rooms**

***11B*-241 General.** Where provided, saunas and steam rooms shall comply with *11B*-612.

EXCEPTION: Where saunas or steam rooms are clustered at a single location, no more than 5 percent of the saunas and steam rooms, but no fewer than one, of each type in each cluster shall be required to comply with *11B*-612.

***11B*-242 Swimming Pools, Wading Pools, and Spas**

***11B*-242.1 General.** Swimming pools, wading pools, and spas shall comply with *11B*-242.

***11B*-242.2 Swimming Pools.** At least two accessible means of entry shall be provided for swimming pools. Accessible means of entry shall be swimming pool lifts complying with *11B*-1009.2; sloped entries complying with *11B*-1009.3; transfer walls complying with *11B*-1009.4; transfer systems complying with *11B*-1009.5; and pool stairs complying with *11B*-1009.6. At least one accessible means of entry provided shall comply with *11B*-1009.2 or *11B*-1009.3.

EXCEPTIONS: 1. Where a swimming pool has less than 300 linear feet (91 m) of swimming pool wall, no more than one accessible means of entry shall be required provided that the accessible means of entry is a swimming pool lift complying with *11B*-1009.2 or sloped entry complying with *11B*-1009.3.

2. Wave action pools, leisure rivers, sand bottom pools, and other pools where user access is limited to one area shall not be required to provide more than one accessible means of entry provided that the accessible means of entry is a swimming pool lift complying with *11B*-1009.2, a sloped entry complying with *11B*-1009.3, or a transfer system complying with *11B*-1009.5.

3. Catch pools shall not be required to provide an accessible means of entry provided that the catch pool edge is on an accessible route.

***11B*-242.3 Wading Pools.** At least one accessible means of entry shall be provided for wading pools. Accessible means of entry shall comply with sloped entries complying with *11B*-1009.3.

***11B-*242.4 Spas.** At least one accessible means of entry shall be provided for spas. Accessible means of entry shall comply with swimming pool lifts complying with*11B-*1009.2; transfer walls complying with *11B-*1009.4; or transfer systems complying with *11B-*1009.5.

EXCEPTION: Where spas are provided in a cluster, no more than 5 percent, but no fewer than one, spa in each cluster shall be required to comply with *11B-*242.4.

***11B-*243 Shooting Facilities with Firing Positions**

***11B-*243.1 General.** Where shooting facilities with firing positions are designed and constructed at a site, at least 5 percent, but no fewer than one, of each type of firing position shall comply with *11B-*1010.

11B-244 Religious Facilities

11B-244.1 General. *Religious facilities shall be accessible in accordance with the provisions of this code. Where specific areas within religious facilities contain more than one use, each portion shall comply with the applicable requirements for that use.*

11B-245 Commercial Facilities Located in Private Residences.

11B-245.1 General. *Commercial facilities located in private residences shall comply with 11B-245.*

11B-245.2 Application. *When a commercial facility is located in a private residence, that portion used exclusively in the operation of the commercial facility or that portion used both for the commercial facility and for residential purposes is covered by the new construction and alterations requirements of this chapter.*

EXCEPTION: *The portion of the residence used exclusively as a residence is not required to be accessible in accordance with this chapter.*

11B-245.3 Accessible Elements Required. *The accessible portion of the residence extends to those elements used to enter the commercial facility, including the front sidewalk, if any, the door or entryway, and hallways; and those portions of the residence, interior or exterior, available to or used by employees or visitors of the commercial facility, including restrooms.*

11B-246 Outdoor Developed Areas

11B-246.1 General. *Outdoor developed areas shall comply with 11B-246.*

EXCEPTIONS: 1. *Where the enforcing agency finds that, in specific areas, the natural environment would be materially damaged by compliance with these regulations, such areas shall be subject to these regulations only to the extent that such material damage would not occur.*

2. *Automobile access or accessible routes are not required when the enforcing agency determines compliance with this chapter would create an unreasonable hardship as defined in Chapter 2, Section 202.*

11B-246.2 Camping Facilities. *In camping facilities where campsites are provided, at least two campsites and one additional campsite for each 100 campsites or fraction thereof, shall be accessed by and connected to sanitary facilities by travel routes with a maximum slope of 1:12. Permanent toilet and bathing facilities serving campsites shall comply with 11B-603.*

11B-246.3 Beaches. *Beaches shall be accessible.*

11B. 246.4 Day Use Areas and Vista Points. *Day use areas, vista points, and similar areas shall be accessible.*

11B-246.5 Picnic Areas. *Where picnic tables are provided, at least one picnic table, and one additional table for each 20 tables or fraction thereof, shall be accessible and comply with 11B-902.*

11B-246.6 Parking Lots. *Parking lots shall comply with 11B-208 and 11B-502 and shall be provided with curb cuts leading to adjacent walks, paths or trails.*

11B-246.7 Trails and Paths. *Trails, paths and nature walk areas, or portions of them, shall be constructed with gradients permitting at least partial use by wheelchair occupants. Buildings and other functional areas shall be served by paths or walks with firm and stable surfaces.*

11B-246.8 Nature Trails. *Nature trails and similar educational and informational areas shall be accessible to individuals with vision impairments by the provision of rope guidelines, raised Arabic numerals and symbols, or other similar guide and assistance devices.*

11B-247 Detectable Warnings and Detectable Directional Texture.

11B-247.1 Detectable Warnings.

11B-247.1.1 General. *Detectable warnings shall be provided in accordance with 11B-247.1 and shall comply with 11B-705.1.*

11B-247.1.2 Where Required. *Detectable warnings shall be provided where required by 11B-247.1.2.*

11B-247.1.2.1 Platform Edges. *Platform boarding edges shall have detectable warnings complying with 11B-705.1.1 and 11B-705.1.2.1.*

11B-247.1.2.2 Curb Ramps. *Curb ramps shall have detectable warnings complying with 11B-705.1.1 and 11B-705.1.2.2.*

11B-247.1.2.3 Islands or Cut-through Medians. *Islands or cut-through medians shall have detectable warnings complying with 11B-705.1.1 and 11B-705.1.2.3.*

11B-247.1.2.4 Bus Stops. *Bus stop pads shall provide a square curb surface or detectable warnings complying with 11B-705.1.1 and 11B-705.1.2.4.*

11B-247.1.2.5 Hazardous Vehicular Areas. *If a walk crosses or adjoins a vehicular way, and the walking surfaces are not separated by curbs, railings or other elements between the pedestrian areas and vehicular areas, the boundary between the areas shall be defined by a continuous detectable warning complying with 11B-705.1.1 and 11B-705.1.2.5.*

11B-247.1.2.6 Reflecting Pools. *The edges of reflecting pools shall be protected by railings, walls, warning curbs or detectable warnings complying with 11B-705.1.1 and 11B-705.1.2.6.*

11B-247.1.2.7 Track Crossings. *Where it is necessary to cross tracks to reach transit boarding platforms, detectable warnings complying with 11B-705.1.1 and 11B-705.1.2.7 shall be provided.*

11B-247.2 Detectable Directional Texture. *At transit boarding platforms, the pedestrian access shall be identified with a detectable directional texture complying with 11B-705.2.*

_11B_-301 General

_11B_-301.1 Scope. The provisions of ~~Chapter~~ *Division* 3 shall apply where required by ~~Chapter~~ *Division* 2 or where referenced by a requirement in this ~~document~~ *chapter*.

_11B_-302 Floor or Ground Surfaces

_11B_-302.1 General. Floor and ground surfaces shall be stable, firm, and slip resistant and shall comply with *11B*-302.

EXCEPTIONS: 1. Within animal containment areas, floor and ground surfaces shall not be required to be stable, firm, and slip resistant.

2. Areas of sport activity shall not be required to comply with *11B*-302.

_11B_-302.2 Carpet. Carpet or carpet tile shall be securely attached and shall have a firm cushion, pad, or backing or no cushion or pad. Carpet or carpet tile shall have a level loop, textured loop, level cut pile, or level cut/uncut pile texture. Pile height shall be ½ inch (~~13~~ *12.7* mm) maximum. Exposed edges of carpet shall be fastened to floor surfaces and shall have trim on the entire length of the exposed edge. Carpet edge trim shall comply with *11B*-303.

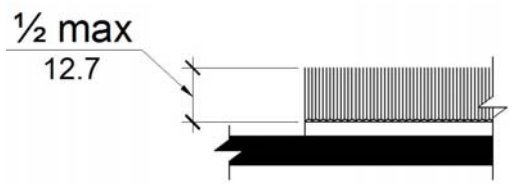

Figure _11B_-302.2
Carpet Pile Height

_11B_-302.3 Openings. Openings in floor or ground surfaces shall not allow passage of a sphere more than ½ inch (~~13~~ *12.7* mm) diameter except as allowed in *11B*-407.4.3, *11B*-409.4.3, *11B*-410.4, *11B*-810.5.3 and *11B*-810.10. Elongated openings shall be placed so that the long dimension is perpendicular to the dominant direction of travel.

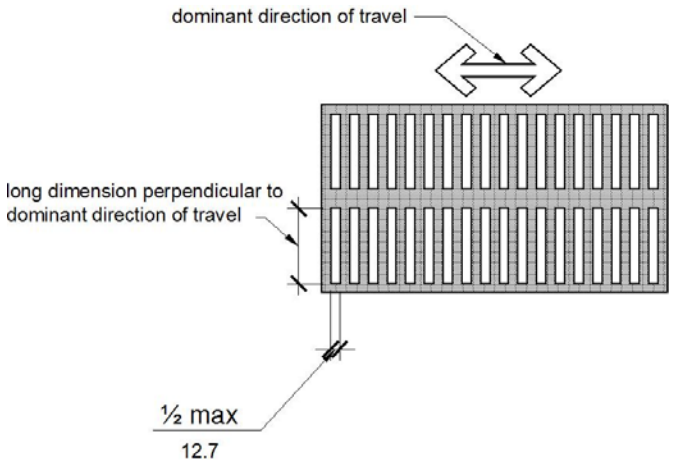

Figure _11B_-302.3
Elongated Openings in Floor or Ground Surfaces

***11B*-303 Changes in Level**

***11B*-303.1 General.** Where changes in level are permitted in floor or ground surfaces, they shall comply with *11B*-303.

EXCEPTIONS: 1. Animal containment areas shall not be required to comply with *11B*-303.

2. Areas of sport activity shall not be required to comply with *11B*-303.

***11B*-303.2 Vertical.** Changes in level of ¼ inch (6.4 mm) high maximum shall be permitted to be vertical *and without edge treatment*.

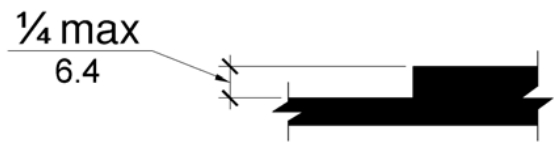

Figure *11B*-303.2
Vertical Change in Level

***11B*-303.3 Beveled.** Changes in level between ¼ inch (6.4 mm) high minimum and ½ inch (~~13~~ *12.7* mm) high maximum shall be beveled with a slope not steeper than 1:2.

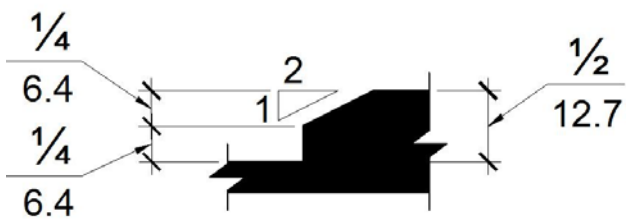

Figure *11B*-303.3
Beveled Change in Level

***11B*-303.4 Ramps.** Changes in level greater than ½ inch (~~13~~ *12.7* mm) high shall be ramped, and shall comply with *11B*-405 or *11B*-406.

11B-303.5 Warning Curbs. *Abrupt changes in level exceeding 4 inches (102 mm) in a vertical dimension between walks, sidewalks or other pedestrian ways and adjacent surfaces or features shall be identified by warning curbs at least 6 inches (152 mm) in height above the walk or sidewalk surface.*

EXCEPTIONS: 1. *A warning curb is not required between a walk or sidewalk and an adjacent street or driveway.*

2. *A warning curb is not required when a guard or handrail is provided with a guide rail centered 2 inches (51 mm) minimum and 4 inches (102 mm) maximum above the surface of the walk or sidewalk.*

***11B*-304 Turning Space**

***11B*-304.1 General.** Turning space shall comply with *11B*-304.

***11B*-304.2 Floor or Ground Surfaces.** Floor or ground surfaces of a turning space shall comply with *11B*-302. Changes in level are not permitted.

EXCEPTION: Slopes not steeper than 1:48 shall be permitted.

***11B*-304.3 Size.** Turning space shall comply with *11B*-304.3.1 or *11B*-304.3.2.

***11B*-304.3.1 Circular Space.** The turning space shall be a space of 60 inches (~~1525~~ *1524* mm) diameter minimum. The space shall be permitted to include knee and toe clearance complying with *11B*-306.

***11B*-304.3.2 T-Shaped Space.** The turning space shall be a T-shaped space within a 60 inch (~~1525~~ *1524* mm) square minimum with arms and base 36 inches (~~915~~ *914* mm) wide minimum. Each arm of the T shall be clear of obstructions 12 inches (305 mm) minimum in each direction and the base shall be clear of obstructions 24 inches (610 mm) minimum. The space shall be permitted to include knee and toe clearance complying with *11B*-306 only at the end of either the base or one arm.

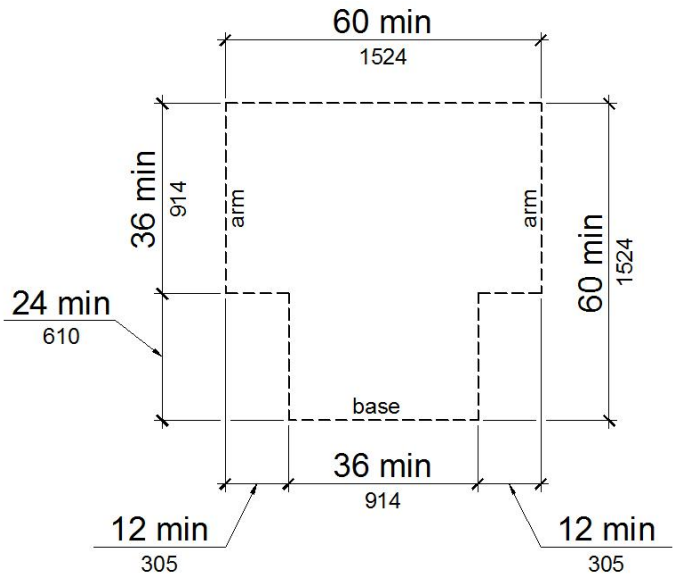

Figure *11B*-304.3.2
T-Shaped Turning Space

***11B*-304.4 Door Swing.** Doors shall be permitted to swing into turning spaces.

***11B*-305 Clear Floor or Ground Space**

***11B*-305.1 General.** Clear floor or ground space shall comply with *11B*-305.

***11B*-305.2 Floor or Ground Surfaces.** Floor or ground surfaces of a clear floor or ground space shall comply with *11B*-302. Changes in level are not permitted.

EXCEPTION: Slopes not steeper than 1:48 shall be permitted.

***11B*-305.3 Size.** The clear floor or ground space shall be 30 inches (~~760~~ *762* mm) minimum by 48 inches (~~1220~~ *1219* mm) minimum.

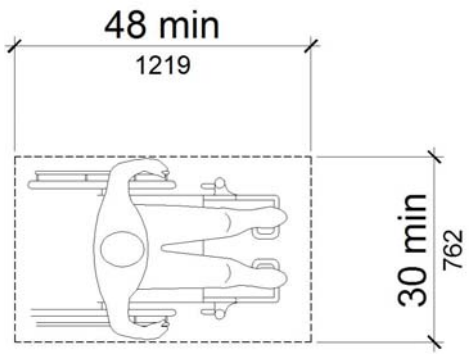

Figure *11B*-305.3
Clear Floor or Ground Space

***11B*-305.4 Knee and Toe Clearance.** Unless otherwise specified, clear floor or ground space shall be permitted to include knee and toe clearance complying with *11B*-306.

***11B*-305.5 Position.** Unless otherwise specified, clear floor or ground space shall be positioned for either forward or parallel approach to an element.

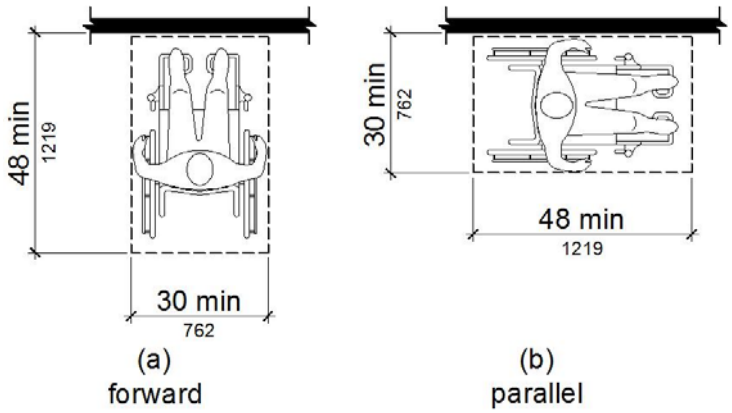

Figure *11B*-305.5
Position of Clear Floor or Ground Space

***11B*-305.6 Approach.** One full unobstructed side of the clear floor or ground space shall adjoin an accessible route or adjoin another clear floor or ground space.

***11B*-305.7 Maneuvering Clearance.** Where a clear floor or ground space is located in an alcove or otherwise confined on all or part of three sides, additional maneuvering clearance shall be provided in accordance with *11B*-305.7.1 and *11B*-305.7.2.

> ***11B*-305.7.1 Forward Approach.** Alcoves shall be 36 inches (~~915~~ *914* mm) wide minimum where the depth exceeds 24 inches (610 mm).

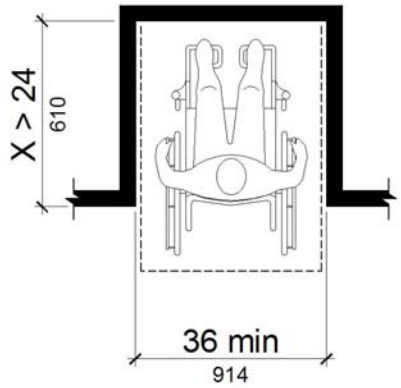

Figure *11B*-305.7.1
Maneuvering Clearance in an Alcove, Forward Approach

***11B*-305.7.2 Parallel Approach.** Alcoves shall be 60 inches (~~1525~~ *1524* mm) wide minimum where the depth exceeds 15 inches (~~380~~ *381* mm).

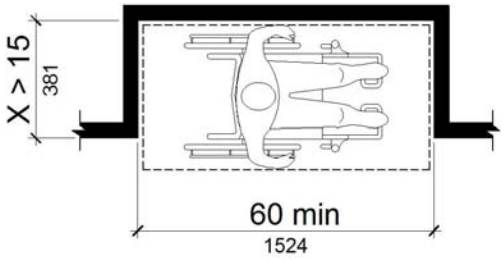

Figure *11B*-305.7.2
Maneuvering Clearance in an Alcove, Parallel Approach

***11B*-306 Knee and Toe Clearance**

***11B*-306.1 General.** Where space beneath an element is included as part of clear floor or ground space or turning space, the space shall comply with *11B*-306. Additional space shall not be prohibited beneath an element but shall not be considered as part of the clear floor or ground space or turning space.

***11B*-306.2 Toe Clearance.**

***11B*-306.2.1 General.** Space under an element between the finish floor or ground and 9 inches (~~230~~ *229* mm) above the finish floor or ground shall be considered toe clearance and shall comply with *11B*-306.2.

***11B*-306.2.2 Maximum Depth.** Toe clearance shall extend 25 inches (635 mm) maximum under an element.

***EXCEPTION:** Toe clearance shall extend 19 inches (483 mm) maximum under lavatories required to be accessible by 11B-213.3.4.*

***11B*-306.2.3 Minimum Required Depth.** Where toe clearance is required at an element as part of a clear floor space, the toe clearance shall extend 17 inches (~~430~~ *432* mm) minimum under the element.

***EXCEPTIONS: 1.** The toe clearance shall extend 19 inches (483 mm) minimum under sinks required to be accessible by 11B-212.3.*

***2.** The toe clearance shall extend 19 inches (483 mm) minimum under built-in dining and work surfaces required to be accessible by 11B-226.1.*

***11B*-306.2.4 Additional Clearance.** Space extending greater than 6 inches (~~150~~ *152* mm) beyond the available knee clearance at 9 inches (~~230~~ *229* mm) above the finish floor or ground shall not be considered toe clearance.

***11B*-306.2.5 Width.** Toe clearance shall be 30 inches (~~760~~ *762* mm) wide minimum.

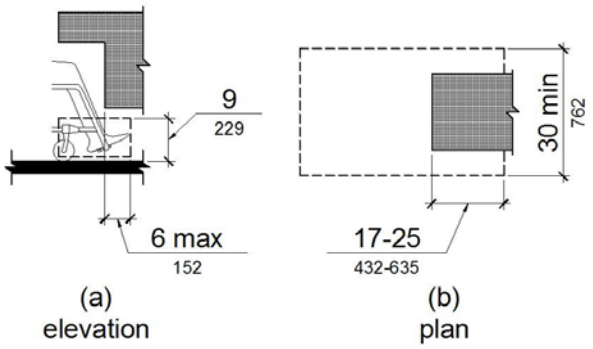

Figure *11B*-306.2
Toe Clearance

***11B*-306.3 Knee Clearance.**

***11B*-306.3.1 General.** Space under an element between 9 inches (~~230~~ *229* mm) and 27 inches (~~685~~ *686* mm) above the finish floor or ground shall be considered knee clearance and shall comply with *11B*-306.3.

***EXCEPTION:** At lavatories required to be accessible by 11B-213.3.4, space between 9 inches (229 mm) and 29 inches (737 mm) above the finish floor or ground, shall be considered knee clearance.*

***11B*- 306.3.2 Maximum Depth.** Knee clearance shall extend 25 inches (635 mm) maximum under an element at 9 inches (~~230~~ *229* mm) above the finish floor or ground.

***11B*-306.3.3 Minimum Required Depth.** Where knee clearance is required under an element as part of a clear floor space, the knee clearance shall be 11 inches (~~280~~ *279* mm) deep minimum at 9 inches (~~230~~ *229* mm) above the finish floor or ground, and 8 inches (~~205~~ *203* mm) deep minimum at 27 inches (~~685~~ *686* mm) above the finish floor or ground.

***EXCEPTIONS: 1.** At lavatories required to be accessible by 11B-213.3.4, the knee clearance shall be 27 inches (686 mm) high minimum above the finish floor or ground at a depth of 8 inches (203 mm) minimum increasing to 29 inches (737 mm) high minimum above the finish floor or ground at the front edge of a counter with a built-in lavatory or at the front edge of a wall-mounted lavatory fixture.*

***2.** At dining and work surfaces required to be accessible by 11B-226.1, knee clearance shall extend 19 inches (483 mm) deep minimum at 27 inches (686 mm) above the finish floor or ground.*

***11B*-306.3.4 Clearance Reduction.** Between 9 inches (~~230~~ *229* mm) and 27 inches (~~685~~ *686* mm) above the finish floor or ground, the knee clearance shall be permitted to reduce at a rate of 1 inch (25 mm) in depth for each 6 inches (~~150~~ *152* mm) in height.

EXCEPTION: *The knee clearance shall not be reduced at built-in dining and work surfaces required to be accessible by 11B-226.1.*

***11B*-306.3.5 Width.** Knee clearance shall be 30 inches (~~760~~ *762* mm) wide minimum.

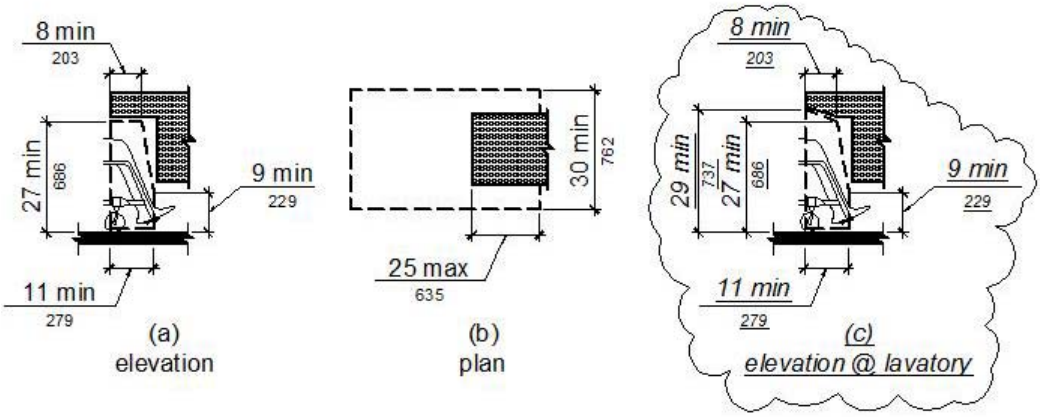

Figure *11B*-306.3
Knee Clearance

***11B*-307 Protruding Objects**

***11B*-307.1 General.** Protruding objects shall comply with *11B*-307.

***11B*-307.2 Protrusion Limits.** Objects with leading edges more than 27 inches (~~685~~ *686* mm) and not more than 80 inches (~~2030~~ *2032* mm) above the finish floor or ground shall protrude 4 inches (~~100~~ *102* mm) maximum horizontally into the circulation path.

EXCEPTION: Handrails shall be permitted to protrude 4½ inches (~~115~~ *114* mm) maximum.

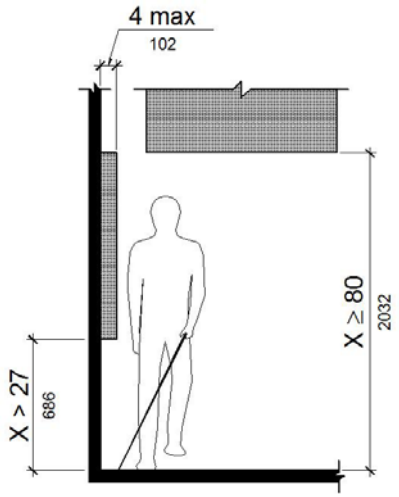

Figure *11B*-307.2
Limits of Protruding Objects

***11B*-307.3 Post-Mounted Objects.** Free-standing objects mounted on posts or pylons shall overhang circulation paths 12 inches (305 mm) maximum when located 27 inches (~~685~~ *686* mm) minimum and 80 inches (~~2030~~ *2032* mm) maximum above the finish floor or ground. Where a sign or other obstruction is

mounted between posts or pylons and the clear distance between the posts or pylons is greater than 12 inches (305 mm), the lowest edge of such sign or obstruction shall be 27 inches (~~685~~ *686* mm) maximum or 80 inches (~~2030~~ *2032* mm) minimum above the finish floor or ground.

EXCEPTION: The sloping portions of handrails serving stairs and ramps shall not be required to comply with *11B*-307.3.

11B-307.3.1 Edges and Corners. *Where signs or other objects are mounted on posts or pylons, and their bottom edges are less than 80 inches (2032 mm) above the floor or ground surface, the edges of such signs and objects shall be rounded or eased and the corners shall have a minimum radius of ⅛ inch (3.2 mm).*

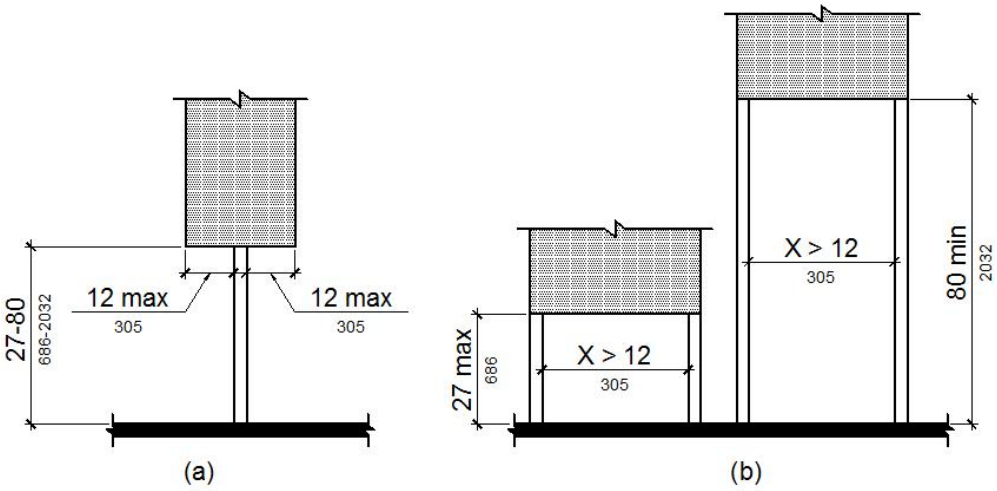

Figure *11B*-307.3
Post-Mounted Protruding Objects

***11B*-307.4 Vertical Clearance.** Vertical clearance shall be 80 inches (~~2030~~ *2032* mm) high minimum. Guardrails or other barriers shall be provided where the vertical clearance is less than 80 inches (~~2030~~ *2032* mm) high. The leading edge of such guardrail or barrier shall be located 27 inches (~~685~~ *686* mm) maximum above the finish floor or ground. *Where a guy support is used parallel to a circulation path, including but not limited to sidewalks, a guy brace, sidewalk guy or similar device shall be used to prevent an overhanging obstruction.*

EXCEPTION: Door closers and door stops shall be permitted to be 78 inches (~~1980~~ *1981* mm) minimum above the finish floor or ground.

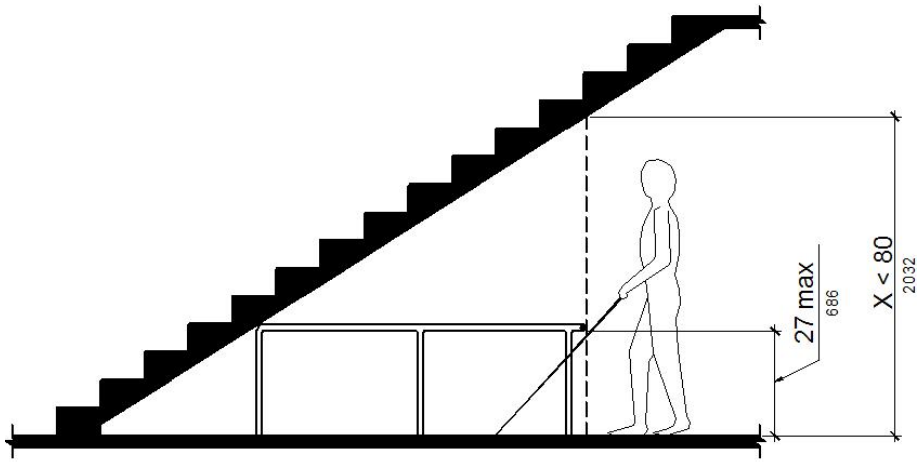

Figure *11B*-307.4
Vertical Clearance

***11B*-307.5 Required Clear Width.** Protruding objects shall not reduce the clear width required for accessible routes.

***11B*-308 Reach Ranges**

***11B*-308.1 General.** Reach ranges shall comply with *11B*-308.

11B-308.1.1 Electrical Switches. *Controls and switches intended to be used by the occupant of a room or area to control lighting and receptacle outlets, appliances or cooling, heating and ventilating equipment, shall comply with 11B-308 except the low reach shall be measured to the bottom of the outlet box and the high reach shall be measured to the top of the outlet box.*

11B-308.1.2 Electrical Receptacle Outlets. *Electrical receptacle outlets on branch circuits of 30 amperes or less and communication system receptacles shall comply with 11B-308 except the low reach shall be measured to the bottom of the outlet box and the high reach shall be measured to the top of the outlet box.*

***11B*-308.2 Forward Reach.**

***11B*-308.2.1 Unobstructed.** Where a forward reach is unobstructed, the high forward reach shall be 48 inches (~~1220~~ *1219* mm) maximum and the low forward reach shall be 15 inches (~~380~~ *381* mm) minimum above the finish floor or ground.

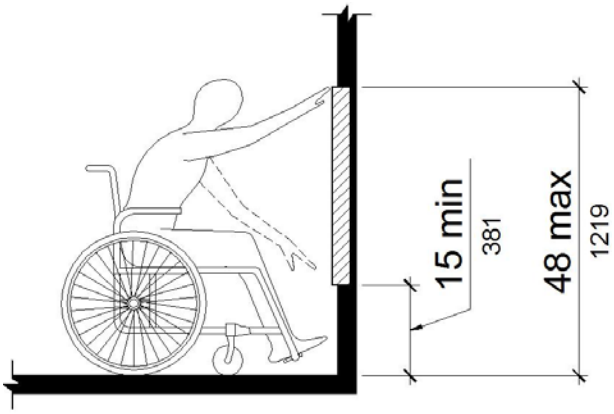

Figure *11B*-308.2.1
Unobstructed Forward Reach

***11B*-308.2.2 Obstructed High Reach.** Where a high forward reach is over an obstruction, the clear floor space shall extend beneath the element for a distance not less than the required reach depth over the obstruction. The high forward reach shall be 48 inches (~~1220~~ *1219* mm) maximum where the reach depth is 20 inches (~~510~~ *508* mm) maximum. Where the reach depth exceeds 20 inches (~~510~~ *508* mm), the high forward reach shall be 44 inches (~~1120~~ *1118* mm) maximum and the reach depth shall be 25 inches (635 mm) maximum.

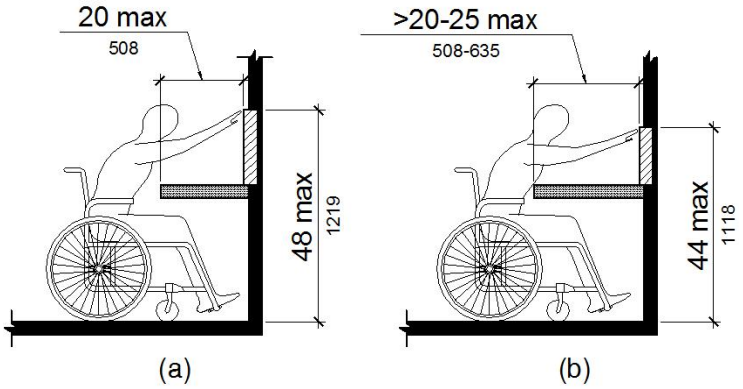

Figure *11B*-308.2.2
Obstructed High Forward Reach

***11B*-308.3 Side Reach.**

***11B*-308.3.1 Unobstructed.** Where a clear floor or ground space allows a parallel approach to an element and the side reach is unobstructed, the high side reach shall be 48 inches (~~1220~~ *1219* mm) maximum and the low side reach shall be 15 inches (~~380~~ *381* mm) minimum above the finish floor or ground.

EXCEPTIONS: 1. An obstruction shall be permitted between the clear floor or ground space and the element where the depth of the obstruction is 10 inches (~~255~~ *254* mm) maximum.

2. Operable parts of fuel dispensers shall be permitted to be 54 inches (~~1370~~ *1372* mm) maximum measured from the surface of the vehicular way where fuel dispensers are installed on existing curbs.

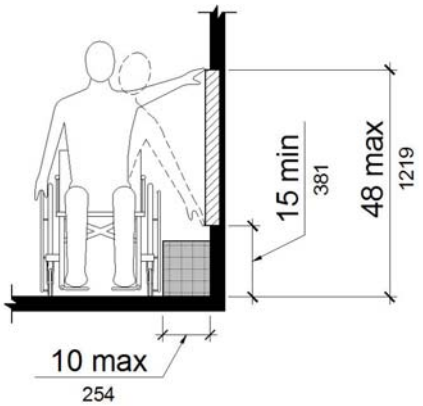

Figure *11B*-308.3.1
Unobstructed Side Reach

***11B*-308.3.2 Obstructed High Reach.** Where a clear floor or ground space allows a parallel approach to an element and the high side reach is over an obstruction, the height of the obstruction shall be 34 inches (~~865~~ *864* mm) maximum and the depth of the obstruction shall be 24 inches (610 mm) maximum. The high side reach shall be 48 inches (~~1220~~ *1219* mm) maximum for a reach depth of 10 inches (~~255~~ *254* mm) maximum. Where the reach depth exceeds 10 inches (~~255~~ *254* mm), the high side reach shall be 46 inches (~~1170~~ *1168* mm) maximum for a reach depth of 24 inches (610 mm) maximum.

EXCEPTIONS: 1. The top of washing machines and clothes dryers shall be permitted to be 36 inches (~~915~~ *914* mm) maximum above the finish floor.

2. Operable parts of fuel dispensers shall be permitted to be 54 inches (~~1370~~ *1372* mm) maximum measured from the surface of the vehicular way where fuel dispensers are installed on existing curbs.

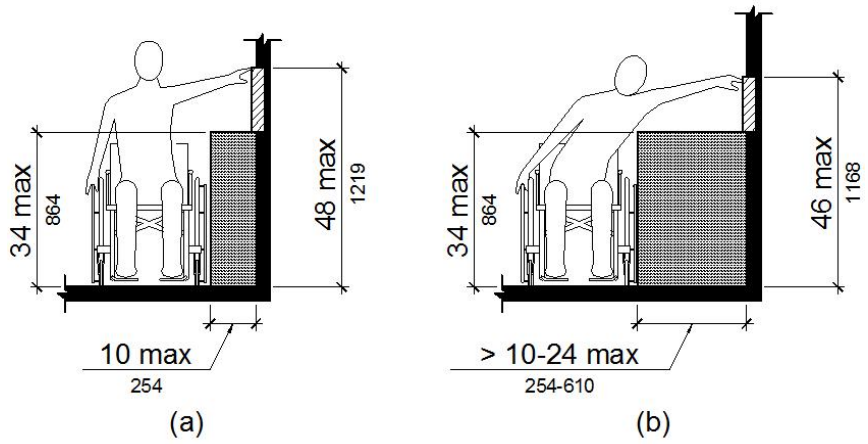

Figure *11B*-308.3.2
Obstructed High Side Reach

***11B*-309 Operable Parts**

***11B*-309.1 General.** Operable parts shall comply with *11B*-309.

***11B*-309.2 Clear Floor Space.** A clear floor or ground space complying with *11B*-305 shall be provided.

***11B*-309.3 Height.** Operable parts shall be placed within one or more of the reach ranges specified in *11B*-308.

***11B*-309.4 Operation.** Operable parts shall be operable with one hand and shall not require tight grasping, pinching, or twisting of the wrist. The force required to activate operable parts shall be 5 pounds (22.2 N) maximum.

EXCEPTION: Gas pump nozzles shall not be required to provide operable parts that have an activating force of 5 pounds (22.2 N) maximum.

~~CHAPTER~~ *DIVISION* 4: ACCESSIBLE ROUTES

11B-401 General

***11B*-401.1 Scope.** The provisions of ~~Chapter~~ *Division* 4 shall apply where required by ~~Chapter~~ *Division* 2 or where referenced by a requirement in this ~~document~~ *chapter*.

11B-402 Accessible Routes

***11B*-402.1 General.** Accessible routes shall comply with *11B*-402.

***11B*-402.2 Components.** Accessible routes shall consist of one or more of the following components: walking surfaces with a running slope not steeper than 1:20, doorways, ramps, curb ramps excluding the flared sides, elevators, and platform lifts. All components of an accessible route shall comply with the applicable requirements of ~~Chapter~~ *Division* 4.

11B-403 Walking Surfaces

***11B*-403.1 General.** Walking surfaces that are a part of an accessible route shall comply with *11B*-403.

***11B*-403.2 Floor or Ground Surface.** Floor or ground surfaces shall comply with *11B*-302.

***11B*-403.3 Slope.** The running slope of walking surfaces shall not be steeper than 1:20. The cross slope of walking surfaces shall not be steeper than 1:48.

> ***EXCEPTION:*** *The running slope of sidewalks shall not exceed the general grade established for the adjacent street or highway.*

***11B*-403.4 Changes in Level.** Changes in level shall comply with *11B*-303.

***11B*-403.5 Clearances.** Walking surfaces shall provide clearances complying with *11B*-403.5.

> **EXCEPTION:** Within employee work areas, clearances on common use circulation paths shall be permitted to be decreased by work area equipment provided that the decrease is essential to the function of the work being performed.
>
> ***11B*-403.5.1 Clear Width.** Except as provided in *11B*-403.5.2 and *11B*-403.5.3, the clear width of walking surfaces shall be 36 inches (~~915~~ *914* mm) minimum.
>
> > ~~**EXCEPTION**~~ ***EXCEPTIONS: 1.*** The clear width shall be permitted to be reduced to 32 inches (~~815~~ *813* mm) minimum for a length of 24 inches (610 mm) maximum provided that reduced width segments are separated by segments that are 48 inches (~~1220~~ *1219* mm) long minimum and 36 inches (~~915~~ *914* mm) wide minimum.
> >
> > ***2.*** *The clear width for walking surfaces in corridors serving an occupant load of 10 or more shall be 44 inches (1118 mm) minimum.*
> >
> > ***3.*** *The clear width for sidewalks and walks shall be 48 inches (1219 mm) minimum. When, because of right-of-way restrictions, natural barriers or other existing conditions, the enforcing agency determines that compliance with the 48-inch (1219 mm) clear sidewalk width would create an unreasonable hardship, the clear width may be reduced to 36 inches (914 mm).*
> >
> > ***4.*** *The clear width for aisles shall be 36 inches (914 mm) minimum if serving elements on only one side, and 44 inches (1118 mm) minimum if serving elements on both sides.*

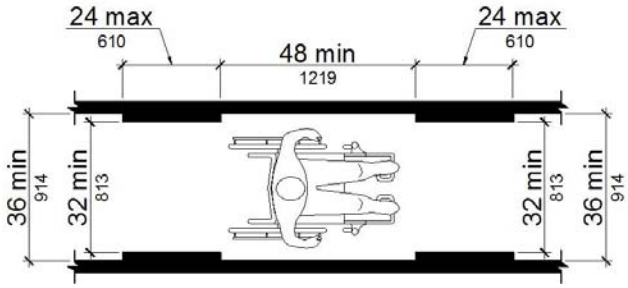

Figure *11B*-403.5.1
Clear Width of an Accessible Route

***11B*-403.5.2 Clear Width at Turn.** Where the accessible route makes a 180 degree turn around an element which is less than 48 inches (~~1220~~ *1219* mm) wide, clear width shall be 42 inches (~~1065~~ *1067* mm) minimum approaching the turn, 48 inches (~~1220~~ *1219* mm) minimum at the turn and 42 inches (~~1065~~ *1067* mm) minimum leaving the turn.

EXCEPTION: Where the clear width at the turn is 60 inches (~~1525~~ *1524* mm) minimum compliance with *11B*-403.5.2 shall not be required.

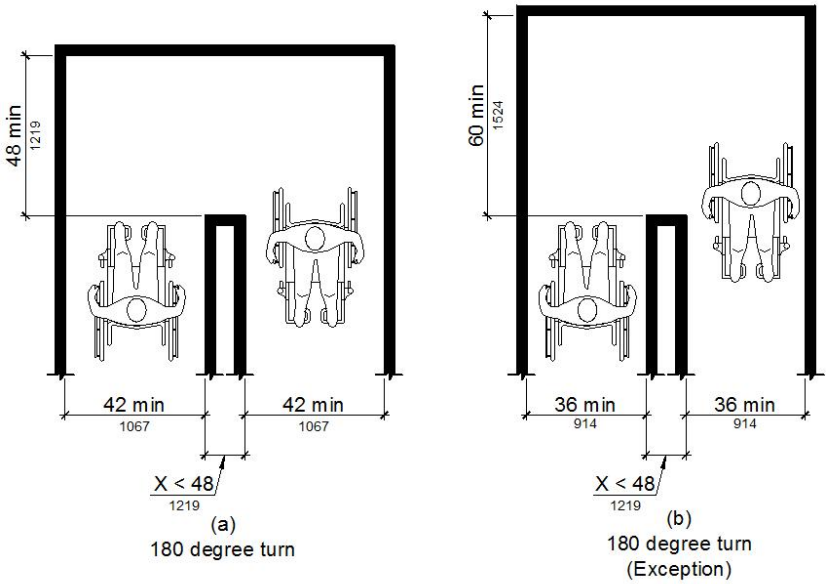

Figure *11B*-403.5.2
Clear Width at Turn

***11B*-403.5.3 Passing Spaces.** An accessible route with a clear width less than 60 inches (~~1525~~ *1524* mm) shall provide passing spaces at intervals of 200 feet (~~61 m~~ *60 960 mm*) maximum. Passing spaces shall be either: a space 60 inches (~~1525~~ *1524* mm) minimum by 60 inches (~~1525~~ *1524* mm) minimum; or, an intersection of two walking surfaces providing a T-shaped space complying with *11B*-304.3.2 where the base and arms of the T-shaped space extend 48 inches (~~1220~~ *1219* mm) minimum beyond the intersection.

***11B*-403.6 Handrails.** Where handrails are provided along walking surfaces with running slopes not steeper than 1:20 they shall comply with *11B*-505.

11B-403.7 Continuous Gradient. *All walks with continuous gradients shall have resting areas, 5 feet (1524 mm) in length, at intervals of 400 feet (121 920) maximum. The resting area shall be at least as wide as the walk. The slope of the resting area in all directions shall be 1:48 maximum.*

***11B-*404 Doors, Doorways, and Gates**

***11B-*404.1 General.** Doors, doorways, and gates that are part of an accessible route shall comply with *11B-*404.

~~**EXCEPTION:**~~ ***EXCEPTIONS: 1.*** Doors, doorways, and gates designed to be operated only by security personnel shall not be required to comply with *11B-*404.2.7, *11B-*404.2.8, *11B-*404.2.9, *11B-*404.3.2 and *11B-*404.3.4 through *11B-*404.3.7. *A sign visible from the approach side complying with 11B-703.5 shall be posted stating "Entry restricted and controlled by security personnel".*

2. *At detention and correctional facilities, doors, doorways, and gates designed to be operated only by security personnel shall not be required to comply with 11B-404.2.7, 11B-404.2.8, 11B-404.2.9, 11B-404.3.2 and 11B-404.3.4 through 11B-404.3.7.*

***11B-*404.2 Manual Doors, Doorways, and Manual Gates.** Manual doors and doorways and manual gates intended for user passage shall comply with *11B-*404.2.

***11B-*404.2.1 Revolving Doors, Gates, and Turnstiles.** Revolving doors, revolving gates, and turnstiles shall not be part of an accessible route.

***11B-*404.2.2 Double-Leaf Doors and Gates.** At least one of the active leaves of doorways with two leaves shall comply with *11B-*404.2.3 and *11B-*404.2.4.

***11B-*404.2.3 Clear Width.** Door openings shall provide a clear width of 32 inches (~~815~~ *813* mm) minimum. Clear openings of doorways with swinging doors shall be measured between the face of the door and the stop, with the door open 90 degrees. Openings more than 24 inches (610 mm) deep shall provide a clear opening of 36 inches (~~915~~ *914* mm) minimum. There shall be no projections into the required clear opening width lower than 34 inches (~~865~~ *864* mm) above the finish floor or ground. Projections into the clear opening width between 34 inches (~~865~~ *864* mm) and 80 inches (~~2030~~ *2032* mm) above the finish floor or ground shall not exceed 4 inches (~~100~~ *102* mm).

EXCEPTIONS: 1. In alterations, a projection of 5/8 inch (~~16~~ *15.9* mm) maximum into the required clear width shall be permitted for the latch side stop.

2. Door closers and door stops shall be permitted to be 78 inches (~~1980~~ *1981* mm) minimum above the finish floor or ground.

3. *Doors, doorways, and gates not providing full user passage shall be provide a clear width of 20 inches (510 mm) minimum.*

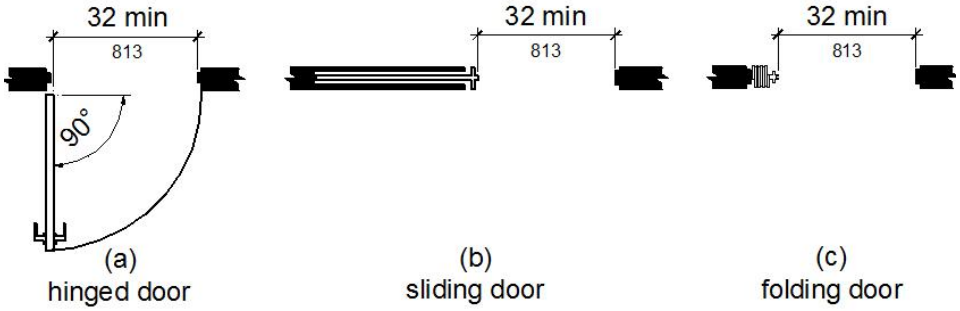

Figure *11B-*404.2.3
Clear Width of Doorways

***11B*-404.2.4 Maneuvering Clearances.** Minimum maneuvering clearances at doors and gates shall comply with *11B*-404.2.4. Maneuvering clearances shall extend the full width of the doorway and the required latch side or hinge side clearance.

EXCEPTION: ***Reserved.*** ~~Entry doors to hospital patient rooms shall not be required to provide the clearance beyond the latch side of the door.~~

***11B*-404.2.4.1 Swinging Doors and Gates.** Swinging doors and gates shall have maneuvering clearances complying with Table *11B*-404.2.4.1.

Table *11B*-404.2.4.1 Maneuvering Clearances at Manual Swinging Doors and Gates

Type of Use		Minimum Maneuvering Clearance	
Approach Direction	**Door or Gate Side**	**Perpendicular to Doorway**	**Parallel to Doorway (beyond latch side unless noted)**
From front	Pull	60 inches (~~1525~~ *1524* mm)	18 inches (~~455~~ *457* mm)[5]
From front	Push	48 inches (~~1220~~ *1219* mm)	0 inches (0 mm)[1]
From hinge side	Pull	60 inches (~~1525~~ *1524* mm)	36 inches (~~915~~ *914* mm)
~~From hinge side~~	~~Pull~~	~~*54* inches (1370 mm)~~	~~*42* inches (1065 mm)~~
From hinge side	Push	~~*42* inches (1065 mm)~~ *44 inches (1118 mm)*[2]	22 inches (~~560~~ *559* mm)[3]
From latch side	Pull	~~48 inches (1220 mm)~~[4] *60 inches (1524 mm)*	24 inches (610 mm)
From latch side	Push	~~*42* inches (1065 mm)~~ *44 inches (1118 mm)*[4]	24 inches (610 mm)

1. Add 12 inches (305 mm) if closer and latch are provided.
2. Add ~~6 inches (150 mm)~~ *4 inches (102 mm)* if closer and latch are provided.
3. Beyond hinge side.
4. Add ~~6 inches (150 mm)~~ *4 inches (102 mm)* if closer is provided.
5. *Add 6 inches (152 mm) at exterior side of exterior doors.*

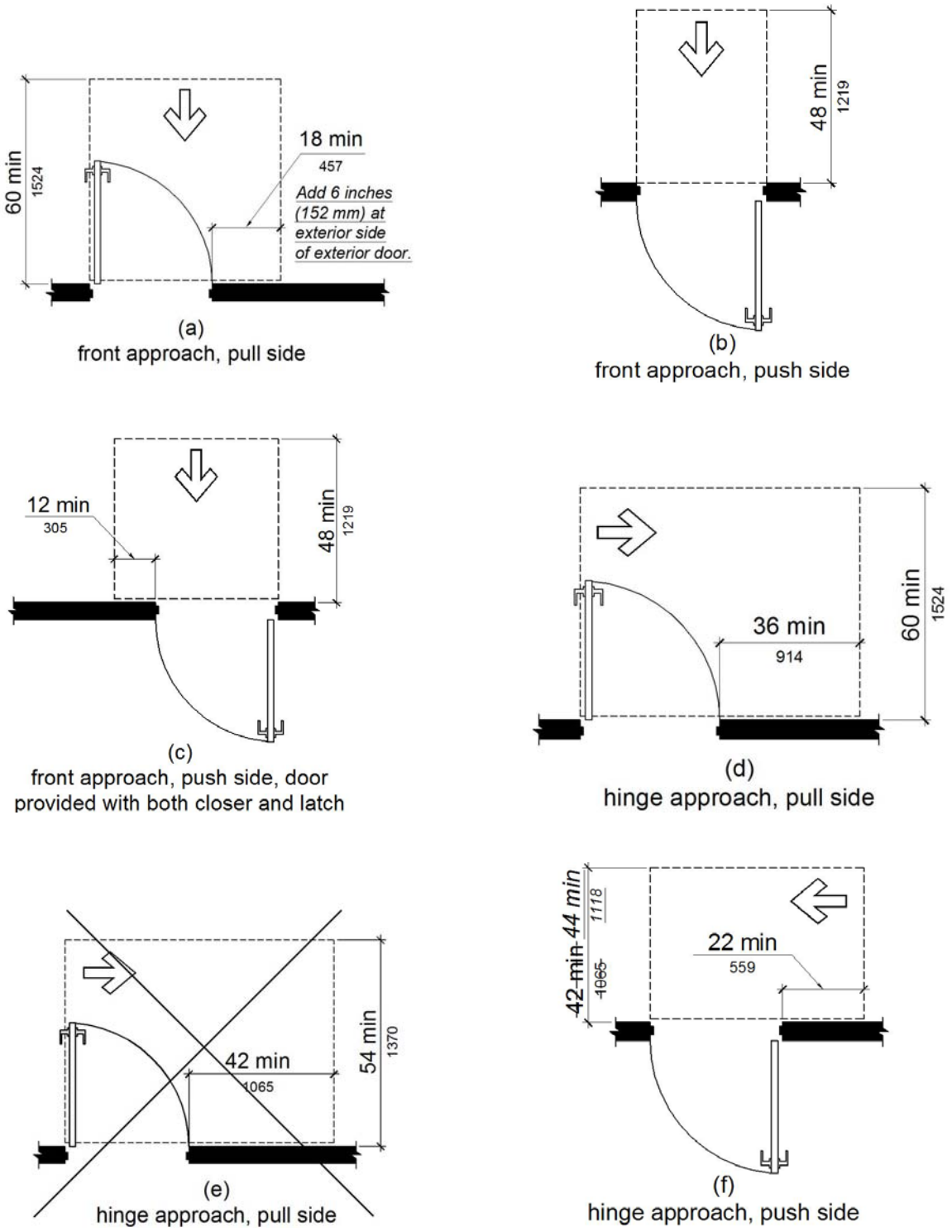

Figure *11B*-404.2.4.1
Maneuvering Clearances at Manual Swinging Doors and Gates

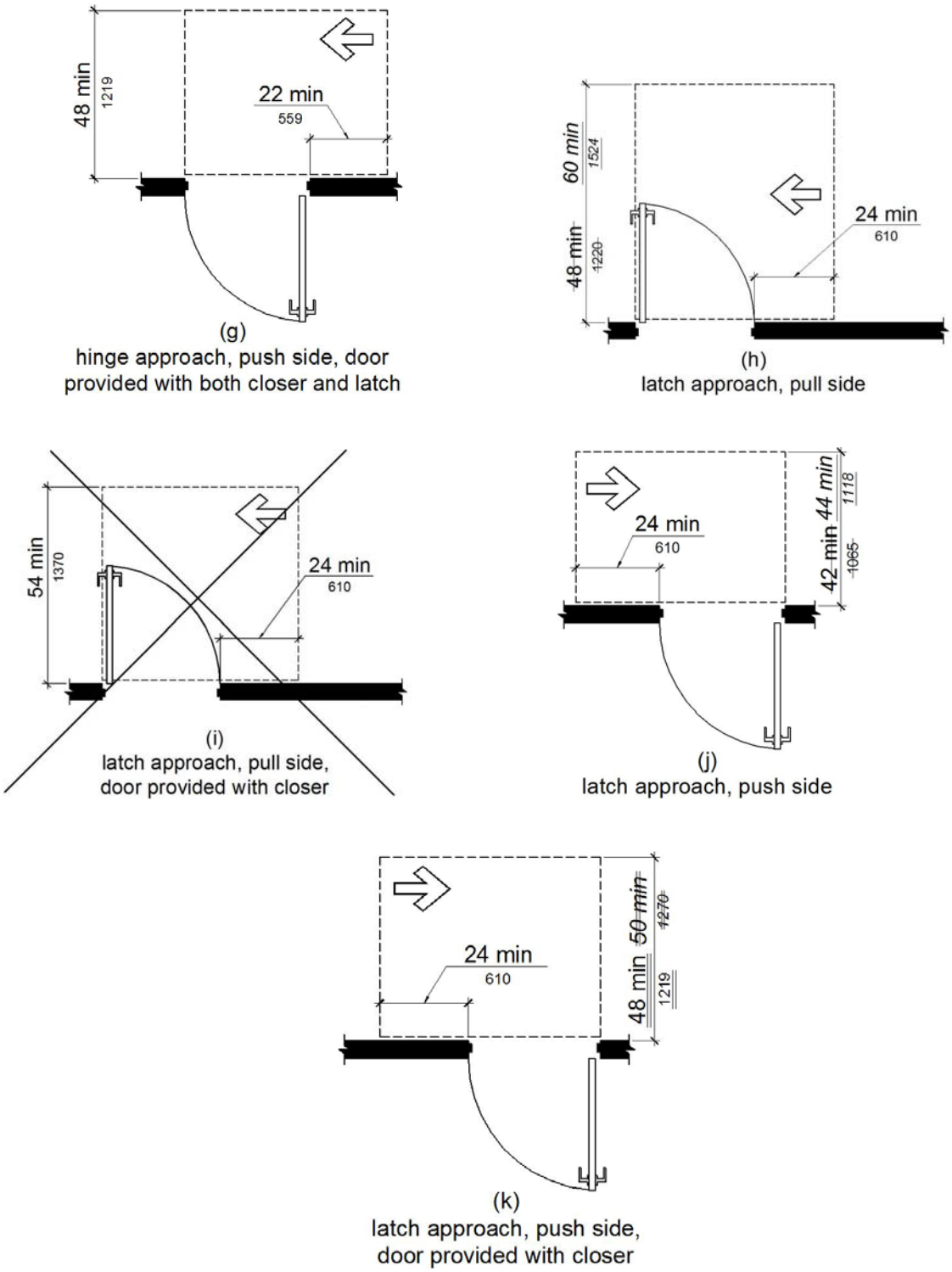

Figure *11B*-404.2.4.1
Maneuvering Clearances at Manual Swinging Doors and Gates

***11B*-404.2.4.2 Doorways without Doors or Gates, Sliding Doors, and Folding Doors.** Doorways less than 36 inches (~~915~~ *914* mm) wide without doors or gates, sliding doors, or folding doors shall have maneuvering clearances complying with Table *11B*-404.2.4.2.

Table *11B*-404.2.4.2 Maneuvering Clearances at Doorways without Doors or Gates, Manual Sliding Doors, and Manual Folding Doors

	Minimum Maneuvering Clearance	
Approach Direction	**Perpendicular to Doorway**	**Parallel to Doorway (beyond stop/latch side unless noted)**
From Front	48 inches (~~1220~~ *1219* mm)	0 inches (0 mm)
From side[1]	42 inches (~~1065~~ *1067* mm)	0 inches (0 mm)
From pocket/hinge side	42 inches (~~1065~~ *1067* mm)	22 inches (~~560~~ *559* mm)[2]
From stop/latch side	42 inches (~~1065~~ *1067* mm)	24 inches (610 mm)
1. Doorway with no door only. 2. Beyond pocket/hinge side.		

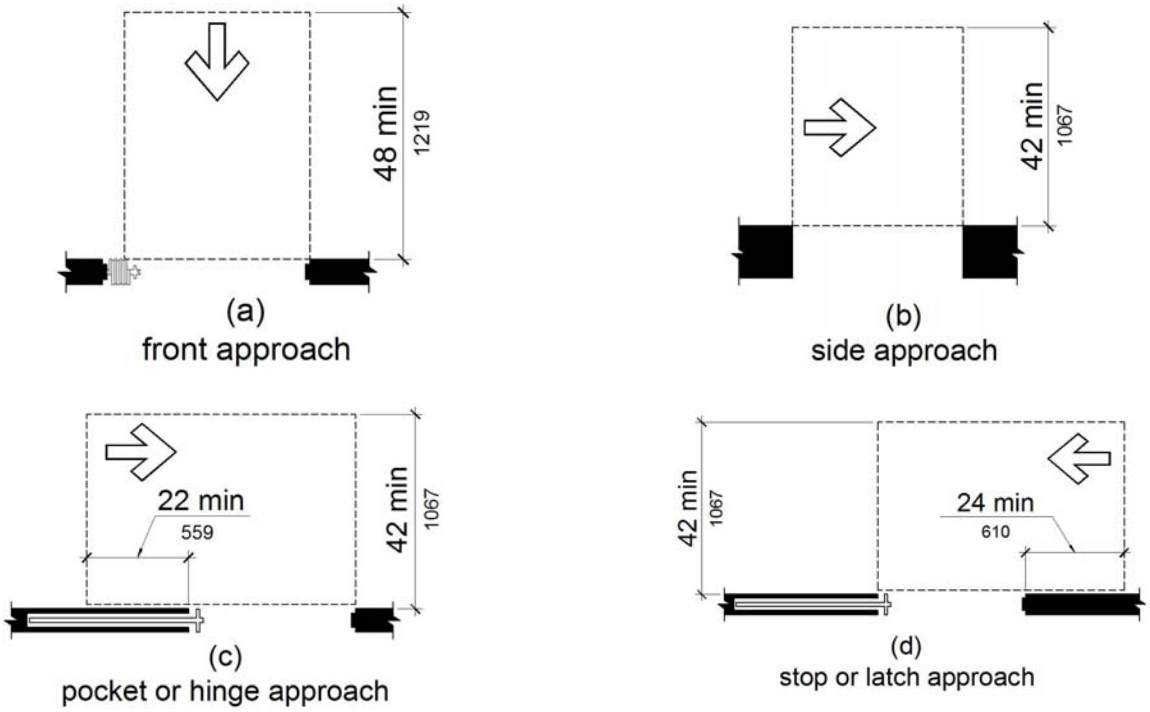

Figure *11B*-404.2.4.2
Maneuvering Clearances at Doorways without Doors, Sliding Doors, Gates, and Folding Doors

***11B*-404.2.4.3 Recessed Doors and Gates.** Maneuvering clearances for forward approach shall be provided when any obstruction within 18 inches (~~455~~ *457* mm) of the latch side ~~a~~ *an interior* doorway*, or within 24 inches (610 mm) of the latch side of an exterior doorway,* projects more than 8 inches (~~205~~ *203* mm) beyond the face of the door, measured perpendicular to the face of the door or gate.

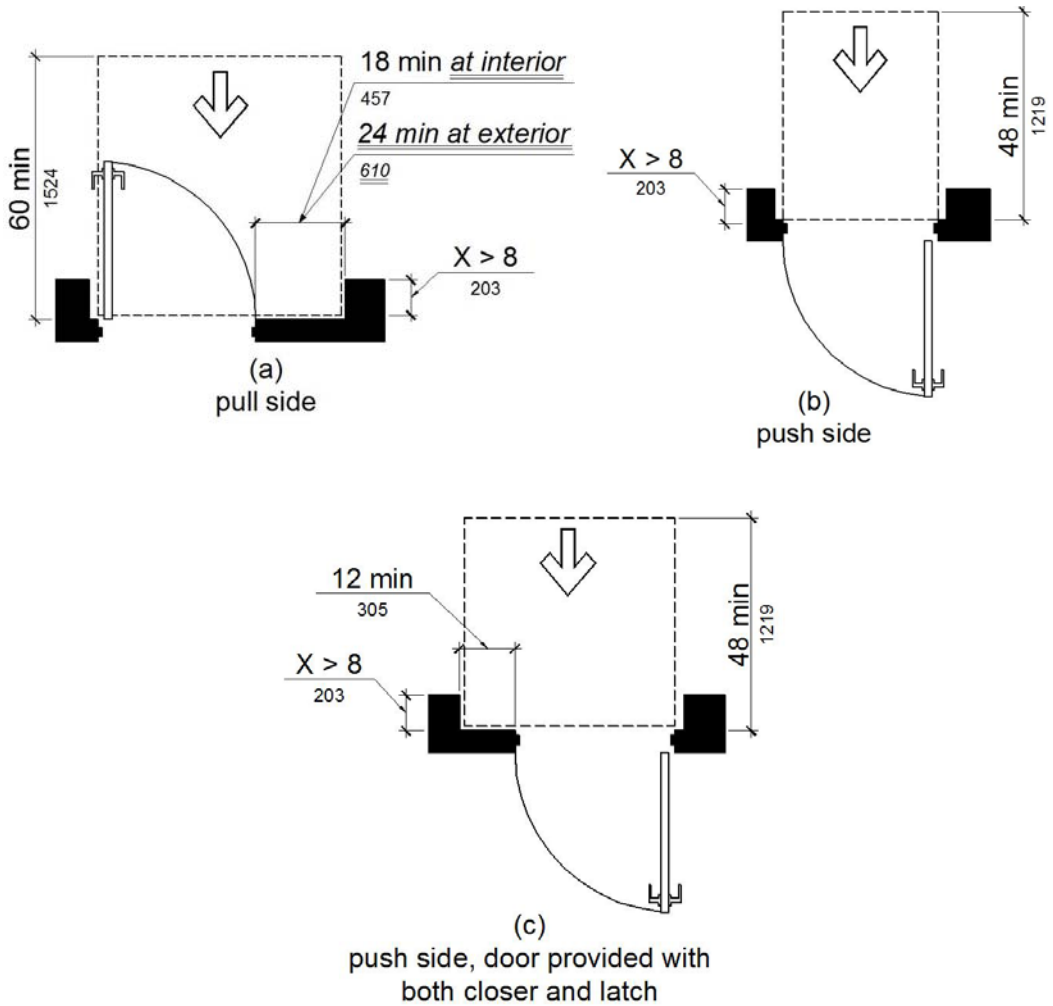

Figure *11B*-404.2.4.3
Maneuvering Clearances at Recessed Doors and Gates

***11B*-404.2.4.4 Floor or Ground Surface.** Floor or ground surface within required maneuvering clearances shall comply with *11B*-302. Changes in level are not permitted.

EXCEPTIONS: 1. Slopes not steeper than 1:48 shall be permitted.

2. Changes in level at thresholds complying with *11B*-404.2.5 shall be permitted.

***11B*-404.2.5 Thresholds.** Thresholds, if provided at doorways, shall be ½ inch (~~13~~ *12.7* mm) high maximum. Raised thresholds and changes in level at doorways shall comply with *11B*-302 and *11B*-303.

EXCEPTION: ***Reserved.*** ~~Existing or altered thresholds ¾ inch (19 mm) high maximum that have a beveled edge on each side with a slope not steeper than 1:2 shall not be required to comply with 404.2.5.~~

***11B*-404.2.6 Doors in Series and Gates in Series.** The distance between two hinged or pivoted doors in series and gates in series shall be 48 inches (1219 mm) minimum plus the width of doors or gates swinging into the space.

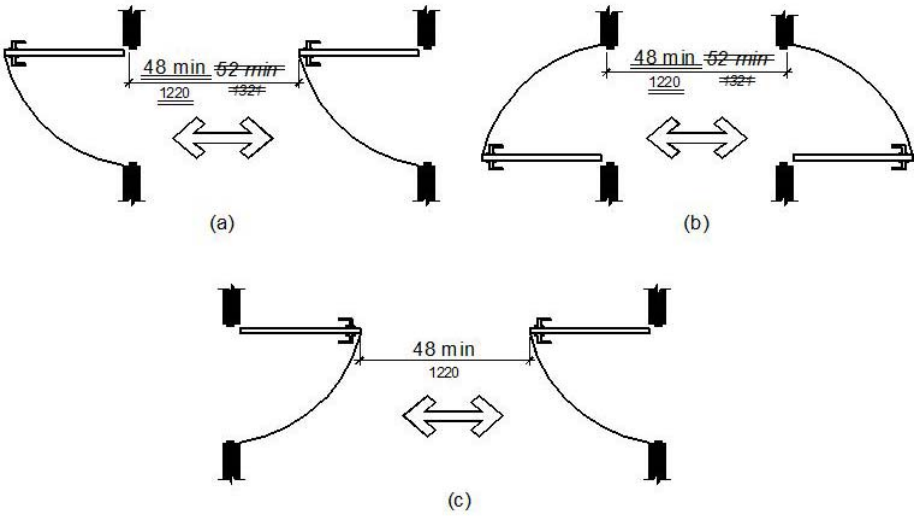

Figure *11B*-404.2.6
Doors in Series and Gates in Series

***11B*-404.2.7 Door and Gate Hardware.** Handles, pulls, latches, locks, and other operable parts on doors and gates shall comply with *11B*-309.4. Operable parts of such hardware shall be 34 inches (~~865~~ *864* mm) minimum and ~~48 inches (1219 mm)~~ *44 inches (1118 mm)* maximum above the finish floor or ground. Where sliding doors are in the fully open position, operating hardware shall be exposed and usable from both sides.

EXCEPTIONS: 1. Existing locks shall be permitted in any location at existing glazed doors without stiles, existing overhead rolling doors or grilles, and similar existing doors or grilles that are designed with locks that are activated only at the top or bottom rail.

2. Access gates in barrier walls and fences protecting pools, spas, and hot tubs shall be permitted to have operable parts of the release of latch on self-latching devices at 54 inches (~~1370~~ *1372* mm) maximum above the finish floor or ground provided the self-latching devices are not also self-locking devices and operated by means of a key, electronic opener, or integral combination lock.

***11B*-404.2.8 Closing Speed.** Door and gate closing speed shall comply with *11B*-404.2.8.

***11B*-404.2.8.1 Door Closers and Gate Closers.** Door closers and gate closers shall be adjusted so that from an open position of 90 degrees, the time required to move the door to a position of 12 degrees from the latch is 5 seconds minimum.

***11B*-404.2.8.2 Spring Hinges.** Door and gate spring hinges shall be adjusted so that from the open position of 70 degrees, the door or gate shall move to the closed position in 1.5 seconds minimum.

***11B*-404.2.9 Door and Gate Opening Force.** ~~Fire doors shall have a minimum opening force allowable by the appropriate administrative authority.~~ The force for pushing or pulling open a door or gate other than fire doors shall be as follows:

1. Interior hinged doors and gates: 5 pounds (22.2 N) maximum.

2. Sliding or folding doors: 5 pounds (22.2 N) maximum.

3. Required fire doors: the minimum opening force allowable by the appropriate administrative authority, not to exceed 15 pounds (66.7 N).

4. Exterior hinged doors: 5 pounds (22.2 N) maximum.

These forces do not apply to the force required to retract latch bolts or disengage other devices that hold the door or gate in a closed position.

EXCEPTIONS: 1. *Exterior doors to machinery spaces including, but not limited to, elevator pits or elevator penthouses; mechanical, electrical or communications equipment rooms; piping or equipment catwalks; electric substations and transformer vaults; and highway and tunnel utility facilities.*

2. *When, at a single location, one of every 8 exterior door leafs, or fraction of 8, is a powered door, other exterior doors at the same location, serving the same interior space, may have a maximum opening force of 8.5 pounds (37.8 N). The powered leaf(s) shall be located closest to the accessible route.*

a. Powered doors shall comply with 11B-404.3. Powered doors shall be fully automatic doors complying with Builders Hardware Manufacturers' Association (BHMA) A156.10 or low energy operated doors complying with BHMA A156.19.

b. Powered doors serving a building or facility with an occupancy of 150 or more shall be provided with a back-up battery or back-up generator. The back-up power source shall be able to cycle the door a minimum of 100 cycles.

c. *Powered doors shall be controlled on both the interior and exterior sides of the doors by sensing devices, push plates, vertical actuation bars or other similar operating devices complying with Divisions 11B-304, 11B-305 and 11B-308.*

At each location where push plates are provided there shall be two push plates; the centerline of one push plate shall be 7 inches (178 mm) minimum and 8 inches (203 mm) maximum above the floor or ground surface and the centerline of the second push plate shall be 30 inches (762 mm) minimum and 44 inches (1118 mm) maximum above the floor or ground surface. Each push plate shall be a minimum of 4 inches (102 mm) diameter or a minimum of 4 inches by 4 inches (102 mm by 102 mm) square and shall display the International Symbol of Accessibility complying with Division 11B-703.7.

At each location where vertical actuation bars are provided the operable portion shall be located so the bottom is 5 inches (127 mm) maximum above the floor or ground surface and the top is 35 inches (889 mm) minimum above the floor or ground surface. The operable portion of each vertical actuation bar shall be a minimum of 2 inches (51 mm) wide and shall display the International Symbol of Accessibility complying with Division 11B-703.7.

Where push plates, vertical actuation bars or other similar operating devices are provided, they shall be placed in a conspicuous location. A level and clear floor or ground space for forward or parallel approach complying with Division 11B-305 shall be provided, centered on the operating device. Doors shall not swing into the required clear floor or ground space.

d. *Signage identifying the accessible entrance required by Division 11B-216.6 shall be placed on, or immediately adjacent to, each powered door. Signage shall be provided in compliance with BHMA A156.10 or BHMA 156.19, as applicable.*

e. In addition to the requirements of Item d, where a powered door is provided in buildings or facilities containing assembly occupancies of 300 or more, a sign displaying the International Symbol of Accessibility measuring 6 inches by 6 inches (152 mm by 152 mm), complying with Division 11B-703.7, shall be provided above the door on both the interior and exterior sides of each powered door.

***11B*-404.2.10 Door and Gate Surfaces.** Swinging door and gate surfaces within 10 inches (~~255~~ *254* mm) of the finish floor or ground measured vertically shall have a smooth surface on the push side extending the full width of the door or gate. Parts creating horizontal or vertical joints in these surfaces shall be within 1/16 inch (1.6 mm) of the same plane as the other *and be free of sharp or abrasive edges*. Cavities created by added kick plates shall be capped.

EXCEPTIONS: 1. Sliding doors shall not be required to comply with *11B*-404.2.10.

2. Tempered glass doors without stiles and having a bottom rail or shoe with the top leading edge tapered at 60 degrees minimum from the horizontal shall not be required to meet the 10 inch (~~255~~ *254* mm) bottom smooth surface height requirement.

3. Doors and gates that do not extend to within 10 inches (~~255~~ *254* mm) of the finish floor or ground shall not be required to comply with *11B*-404.2.10.

4. *Reserved.* ~~Existing doors and gates without smooth surfaces within 10 inches (255 mm) of the finish floor or ground shall not be required to provide smooth surfaces complying with 404.2.10 provided that if added kick plates are installed, cavities created by such kick plates are capped.~~

***11B*-404.2.11 Vision Lights.** Doors, gates, and side lights adjacent to doors or gates, containing one or more glazing panels that permit viewing through the panels shall have the bottom of at least one glazed panel located 43 inches (~~1090~~ *1092* mm) maximum above the finish floor.

EXCEPTION: ~~Vision lights~~ *Glazing panels* with the lowest part more than 66 inches (~~1675~~ *1676* mm) from the finish floor or ground shall not be required to comply with *11B*-404.2.11.

***11B*-404.3 Automatic and Power-Assisted Doors and Gates.** Automatic doors and automatic gates shall comply with *11B*-404.3. Full-powered automatic doors shall comply with ANSI/BHMA A156.10 ~~(incorporated by reference, see "Referenced Standards" in Chapter 1)~~. Low-energy and power-assisted doors shall comply with ANSI/BHMA A156.19 ~~(1997 or 2002 edition)~~ ~~(incorporated by reference, see "Referenced Standards" in Chapter 1)~~.

***11B*-404.3.1 Clear Width.** Doorways shall provide a clear opening of 32 inches (~~815~~ *813* mm) minimum in power-on and power-off mode. The minimum clear width for automatic door systems in a doorway *shall provide a clear, unobstructed opening of 32 inches (813 mm) with one leaf positioned at an angle of 90 degrees from its closed position.* ~~shall be based on the clear opening provided by all leaves in the open position.~~

***11B*-404.3.2 Maneuvering Clearance.** Clearances at power-assisted doors and gates shall comply with *11B*-404.2.4. Clearances at automatic doors and gates without standby power and serving an accessible means of egress shall comply with *11B*-404.2.4.

EXCEPTION: ***1.*** Where automatic doors and gates remain open in the power-off condition, compliance with *11B*-404.2.4 shall not be required.

***11B*-404.3.3 Thresholds.** Thresholds and changes in level at doorways shall comply with *11B*-404.2.5.

***11B*-404.3.4 Doors in Series and Gates in Series.** Doors in series and gates in series shall comply with *11B*-404.2.6.

***11B*-404.3.5 Controls.** Manually operated controls shall comply with *11B*-309. The clear floor space adjacent to the control shall be located beyond the arc of the door swing.

***11B*-404.3.6 Break Out Opening.** Where doors and gates without standby power are a part of a means of egress, the clear break out opening at swinging or sliding doors and gates shall be 32 inches (~~815~~ *813* mm) minimum when operated in emergency mode.

EXCEPTION: Where manual swinging doors and gates comply with *11B*-404.2 and serve the same means of egress compliance with *11B*-404.3.6 shall not be required.

***11B*-404.3.7 Revolving Doors, Revolving Gates, and Turnstiles.** Revolving doors, revolving gates, and turnstiles shall not be part of an accessible route.

***11B*-405 Ramps**

***11B*-405.1 General.** Ramps on accessible routes shall comply with *11B*-405.

EXCEPTION: In assembly areas, aisle ramps adjacent to seating and not serving elements required to be on an accessible route shall not be required to comply with *11B*-405.

***11B*-405.2 Slope.** Ramp runs shall have a running slope not steeper than 1:12.

EXCEPTION: ***Reserved.*** ~~In existing sites, buildings, and facilities, ramps shall be permitted to have running slopes steeper than 1:12 complying with Table 405.2 where such slopes are necessary due to space limitations.~~

~~**Table 405.2 Maximum Ramp Slope and Rise for Existing Sites, Buildings, and Facilities**~~

~~**Slope**[1]~~	~~**Maximum Rise**~~
~~Steeper than 1:10 but not steeper than 1:8~~	~~3 inches (75 mm)~~
~~Steeper than 1:12 but not steeper than 1:10~~	~~6 inches (150 mm)~~
~~1. A slope steeper than 1:8 is prohibited.~~	

***11B*-405.3 Cross Slope.** Cross slope of ramp runs shall not be steeper than 1:48.

***11B*-405.4 Floor or Ground Surfaces.** Floor or ground surfaces of ramp runs shall comply with *11B*-302. Changes in level other than the running slope and cross slope are not permitted on ramp runs.

***11B*-405.5 Clear Width.** The clear width of a ramp run ~~and, where handrails are provided, the clear width between handrails shall be 36 inches (915 mm)~~ *shall be 48 inches (1219 mm)* minimum.

EXCEPTIONS: ***1.*** Within employee work areas, the required clear width of ramps that are a part of common use circulation paths shall be permitted to be decreased by work area equipment provided that the decrease is essential to the function of the work being performed.

2. *Handrails may project into the required clear width of the ramp at each side 3 1/2 inches (89 mm) maximum at the handrail height.*

3. *The clear width of ramps in residential uses serving an occupant load of fifty or less shall be 36 inches (914 mm) minimum between handrails.*

***11B*-405.6 Rise.** The rise for any ramp run shall be 30 inches (~~760~~ *762* mm) maximum.

***11B*-405.7 Landings.** Ramps shall have landings at the top and the bottom of each ramp run. Landings shall comply with *11B*-405.7.

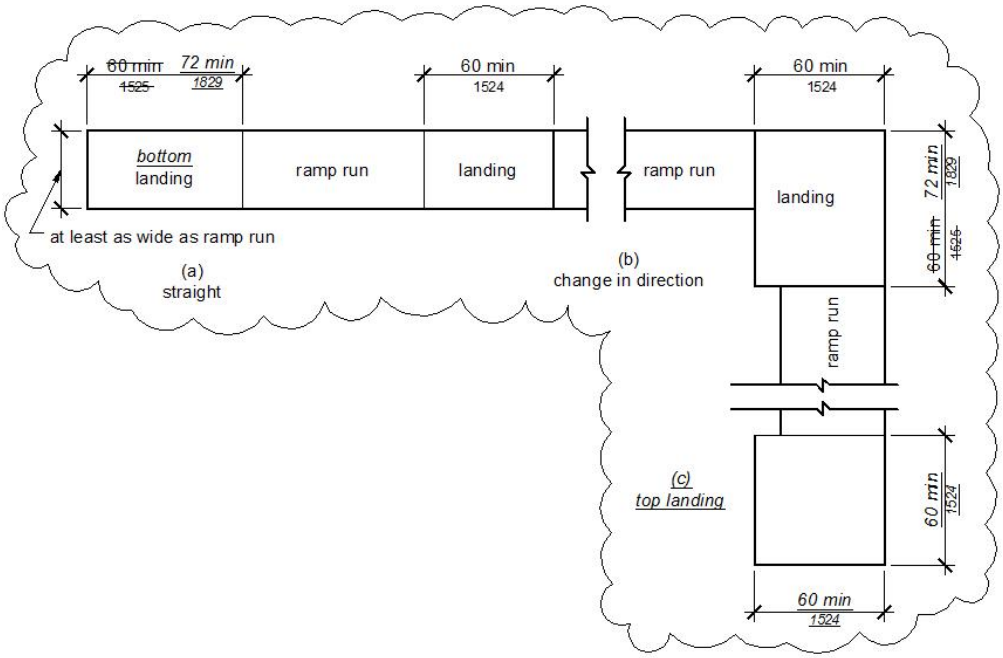

Figure *11B*-405.7
Ramp Landings

***11B*-405.7.1 Slope.** Landings shall comply with *11B*-302. Changes in level are not permitted.

EXCEPTION: Slopes not steeper than 1:48 shall be permitted.

***11B*-405.7.2 Width.** The landing clear width shall be at least as wide as the widest ramp run leading to the landing.

***11B-405.7.2.1:** Top landings shall be 60 inches (1524 mm) wide minimum.*

***11B*-405.7.3 Length.** The landing clear length shall be 60 inches (~~1525~~ *1524* mm) long minimum.

***11B-405.7.3.1:** Bottom landings shall extend 72 inches (1829 mm) minimum in the direction of ramp run.*

***11B*-405.7.4 Change in Direction.** Ramps that change direction between runs at landings shall have a clear landing 60 inches (1525 mm) minimum by ~~60 inches (1525 mm)~~ *72 inches (1829 mm)* minimum *in the direction of downward travel from the upper ramp run*.

***11B*-405.7.5 Doorways.** Where doorways are located adjacent to a ramp landing, maneuvering clearances required by *11B*-404.2.4 and *11B*-404.3.2 shall be permitted to overlap the required landing area. *Doors, when fully open, shall not reduce the required ramp landing width by more than 3 inches (76 mm). Doors, in any position, shall not reduce the minimum dimension of the ramp landing to less than 42 inches (1067 mm).*

***11B*-405.8 Handrails.** Ramp runs ~~with a rise greater than 6 inches (150 mm)~~ shall have handrails complying with *11B*-505.

~~**EXCEPTION:**~~ ***EXCEPTIONS: 1. Reserved.*** ~~Within employee work areas, handrails shall not be required where ramps that are part of common use circulation paths are designed to permit the~~

~~installation of handrails complying with 505. Ramps not subject to the exception to 405.5 shall be designed to maintain a 36 inch (915 mm) minimum clear width when handrails are installed.~~

2. *Handrails are not required at ramps immediately adjacent to fixed seating in assembly areas.*

3. *Curb ramps do not require handrails.*

4. *At door landings, handrails are not required on ramp runs less than 6 inches (152 mm) in rise or 72 inches (1829 mm) in length.*

***11B*-405.9 Edge Protection.** Edge protection complying with ~~405.9.1 or~~ *11B*-405.9.2 shall be provided on each side of ramp runs and at each side of ramp landings.

EXCEPTIONS: 1. Edge protection shall not be required on ramps that are not required to have handrails and have sides complying with *11B*-406.3.

2. Edge protection shall not be required on the sides of ramp landings serving an adjoining ramp run or stairway.

3. Edge protection shall not be required on the sides of ramp landings having a vertical drop-off of ½ inch (~~13~~ *12.7* mm) maximum within 10 inches (~~255~~ *254* mm) horizontally of the minimum landing area specified in *11B*-405.7.

11B*-405.9.1** ***Reserved. ~~**Extended Floor or Ground Surface.** The floor or ground surface of the ramp run or landing shall extend 12 inches (305 mm) minimum beyond the inside face of a handrail complying with 505.~~

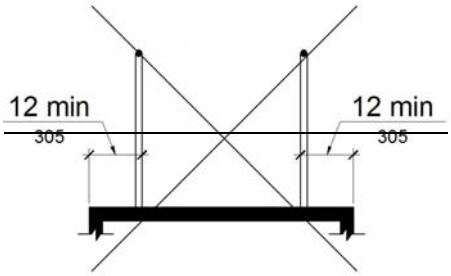

~~**Figure 405.9.1**~~
~~**Extended Floor or Ground Surface Edge Protection**~~

***11B*-405.9.2 Curb or Barrier.** A curb, *2 inches (51 mm) high minimum,* or barrier shall be provided that prevents the passage of a 4 inch (~~100~~ *102* mm) diameter sphere, where any portion of the sphere is within 4 inches (~~100~~ *102* mm) of the finish floor or ground surface. *To prevent wheel entrapment, the curb or barrier shall provide a continuous and uninterrupted barrier along the length of the ramp.*

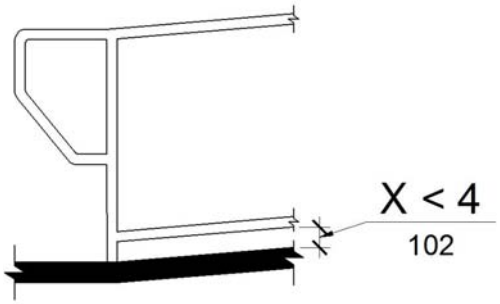

Figure *11B*-405.9.2
Curb or Barrier Edge Protection

***11B-*405.10 Wet Conditions.** Landings subject to wet conditions shall be designed to prevent the accumulation of water.

11B-*406 ~~Curb Ramps~~ *Curb Ramps, Blended Transitions and Islands

~~**406.1 General.** Curb ramps on accessible routes shall comply with 406, 405.2 through 405.5, and 405.10.~~

~~**406.2 Counter Slope.** Counter slopes of adjoining gutters and road surfaces immediately adjacent to the curb ramp shall not be steeper than 1:20. The adjacent surfaces at transitions at curb ramps to walks, gutters, and streets shall be at the same level.~~

~~**406.3 Sides of Curb Ramps.** Where provided, curb ramp flares shall not be steeper than 1:10.~~

~~**406.4 Landings.** Landings shall be provided at the tops of curb ramps. The landing clear length shall be 36 inches (915 mm) minimum. The landing clear width shall be at least as wide as the curb ramp, excluding flared sides, leading to the landing.~~

> ~~**EXCEPTION:** In alterations, where there is no landing at the top of curb ramps, curb ramp flares shall be provided and shall not be steeper than 1:12.~~

~~**406.5 Location.** Curb ramps and the flared sides of curb ramps shall be located so that they do not project into vehicular traffic lanes, parking spaces, or parking access aisles. Curb ramps at marked crossings shall be wholly contained within the markings, excluding any flared sides.~~

~~**406.6 Diagonal Curb Ramps.** Diagonal or corner type curb ramps with returned curbs or other well-defined edges shall have the edges parallel to the direction of pedestrian flow. The bottom of diagonal curb ramps shall have a clear space 48 inches (1220 mm) minimum outside active traffic lanes of the roadway. Diagonal curb ramps provided at marked crossings shall provide the 48 inches (1220 mm) minimum clear space within the markings. Diagonal curb ramps with flared sides shall have a segment of curb 24 inches (610 mm) long minimum located on each side of the curb ramp and within the marked crossing.~~

~~**406.7 Islands.** Raised islands in crossings shall be cut through level with the street or have curb ramps at both sides. Each curb ramp shall have a level area 48 inches (1220 mm) long minimum by 36 inches (*914* mm) wide minimum at the top of the curb ramp in the part of the island intersected by the crossings. Each 48 inch (1220 mm) minimum by 36 inch (915 mm) minimum area shall be oriented so that the 48 inch (1220 mm) minimum length is in the direction of the running slope of the curb ramp it serves. The 48 inch (1220 mm) minimum by 36 inch (915 mm) minimum areas and the accessible route shall be permitted to overlap.~~

***11B-406.1 General.** Curb ramps, blended transitions and islands on accessible routes shall comply with 11B-406. Curb ramps may be perpendicular, parallel, or a combination of perpendicular and parallel.*

> ***11B-406.1.1 Perpendicular Curb Ramps.** Perpendicular curb ramps shall comply with 11B-406.2.*
>
> ***11B-406.1.2 Parallel Curb Ramps.** Parallel curb ramps shall comply with 11B-406.3.*
>
> ***11B-406.1.3 Blended Transitions.** Blended transitions shall comply with 11B-406.4.*
>
> ***11B-406.1.4 Islands.** Islands shall comply with 11B-406.6.*

***11B-406.2 Perpendicular Curb Ramps.** Perpendicular curb ramps shall comply with 11B-406.2 and 11B-406.5.*

> ***11B-406.2.1 Slope.** Ramp runs shall have a running slope not steeper than 1:12.*

11B-406.2.2 Sides of Curb Ramps. *Where provided, curb ramp flares shall not be steeper than 1:10.*

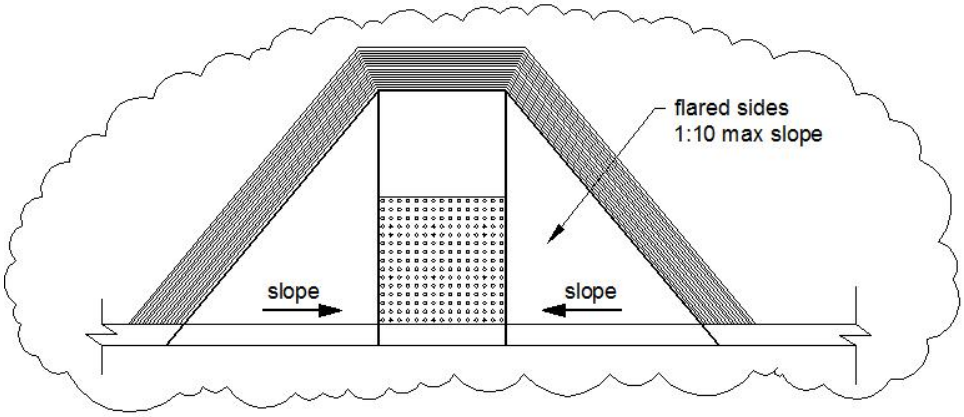

Figure ~~406.3~~ *11B-406.2.2*
Sides of Curb Ramps

11B-406.3 Parallel Curb Ramps. *Parallel curb ramps shall comply with 11B-406.3 and 11B-406.5.*

11B-406.3.1 Slope. *The running slope of the curb ramp segments shall be in-line with the direction of sidewalk travel. Ramp runs shall have a running slope not steeper than 1:12.*

11B-406.3.2 Turning Space. *A turning space 48 inches (1219 mm) minimum by 48 inches (1219 mm) minimum shall be provided at the bottom of the curb ramp. The slope of the turning space in all directions shall be 1:48 maximum.*

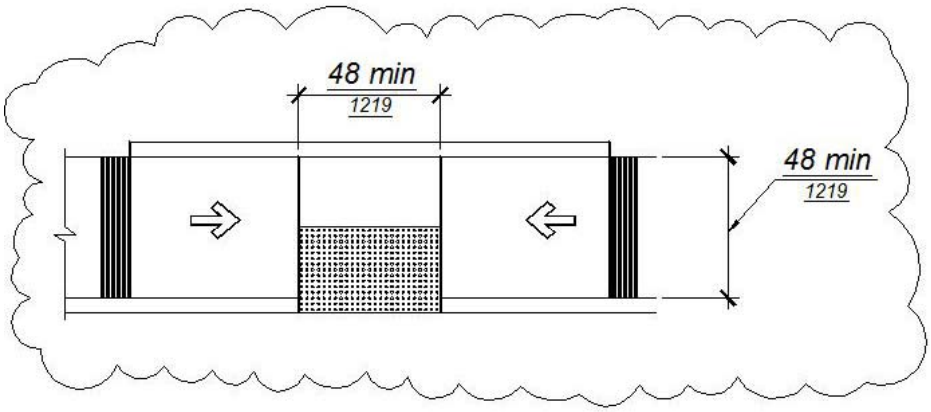

Figure 11B-406.3.2
Parallel Curb Ramps

11B-406.4 Blended Transitions. *Blended transitions shall comply with 11B-406.4 and 11B-406.5.*

11B-406.4.1 Slope. *Blended transitions shall have a running slope not steeper than 1:20.*

11B-406.5 Common Requirements. *Curb ramps and blended transitions shall comply with 11B-406.5.*

11B-406.5.1 Location. *Curb ramps and the flared sides of curb ramps shall be located so that they do not project into vehicular traffic lanes, parking spaces, or parking access aisles. Curb ramps at marked crossings shall be wholly contained within the markings, excluding any flared sides.*

EXCEPTION: *Diagonal curb ramps shall comply with 11B-406.5.9.*

11B-406.5.2 Width. *The clear width of curb ramp runs (excluding any flared sides), blended transitions, and turning spaces shall be 48 inches (1219 mm) minimum.*

11B-406.5.3 Landings. *Landings shall be provided at the tops of curb ramps and blended transitions. The landing clear length shall be 48 inches (1219 mm) minimum. The landing clear width shall be at least as wide as the curb ramp, excluding any flared sides, or the blended transition leading to the landing. The slope of the landing in all directions shall be 1:48 maximum.*

EXCEPTION: *Parallel curb ramps shall not be required to comply with 11B-406.5.3.*

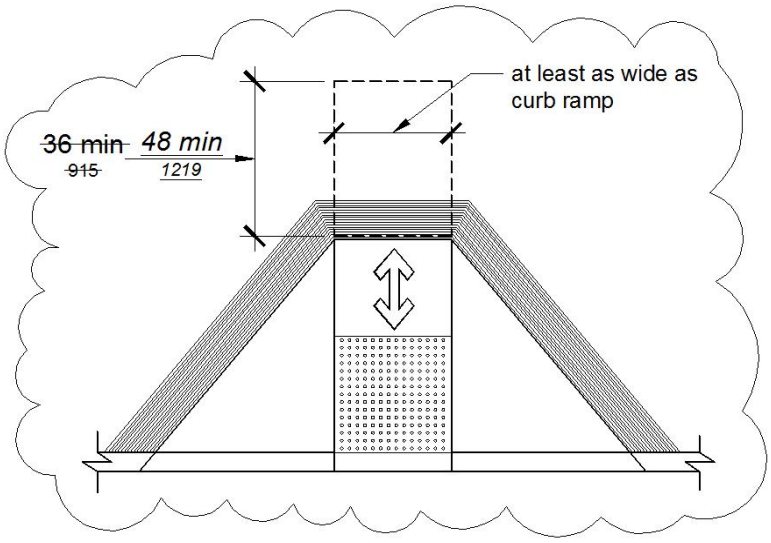

Figure ~~406.4~~ *11B-406.5.3*
Landings at the Top of Curb Ramps

11B-406.5.4 Floor or Ground Surfaces. *Floor or ground surfaces of curb ramps and blended transitions shall comply with 11B-405.4.*

11B-406.5.5 Wet Conditions. *Curb ramps and blended transitions shall comply with 11B-405.10.*

11B-406.5.6 Grade Breaks. *Grade breaks at the top and bottom of curb ramp runs shall be perpendicular to the direction of the ramp run. Grade breaks shall not be permitted on the surface of ramp runs and turning spaces. Surface slopes that meet at grade breaks shall be flush.*

11B-406.5.7 Cross Slope. *The cross slope of curb ramps and blended transitions shall be 1:48 maximum.*

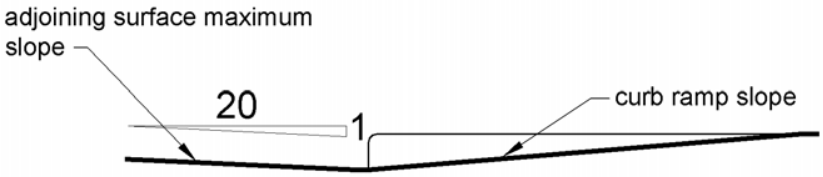

Figure ~~406.2~~ *11B-406.5.7*
Counter Slope of Surfaces Adjacent to Curb Ramps

11B-406.5.8 Counter Slope. *Counter slopes of adjoining gutters and road surfaces immediately adjacent to and within 24 inches (610 mm) of the curb ramp shall not be steeper than 1:20. The*

adjacent surfaces at transitions at curb ramps to walks, gutters, and streets shall be at the same level.

11B-406.5.9 Clear Space at Diagonal Curb Ramps. *The bottom of diagonal curb ramps shall have a clear space 48 inches (1219 mm) minimum outside active traffic lanes of the roadway. Diagonal curb ramps provided at marked crossings shall provide the 48 inches (1219 mm) minimum clear space within the markings.*

11B-406.5.10 Diagonal Curb Ramps. *Diagonal or corner type curb ramps with returned curbs or other well-defined edges shall have the edges parallel to the direction of pedestrian flow. Diagonal curb ramps with flared sides shall have a segment of curb 24 inches (610 mm) long minimum located on each side of the curb ramp and within the marked crossing.*

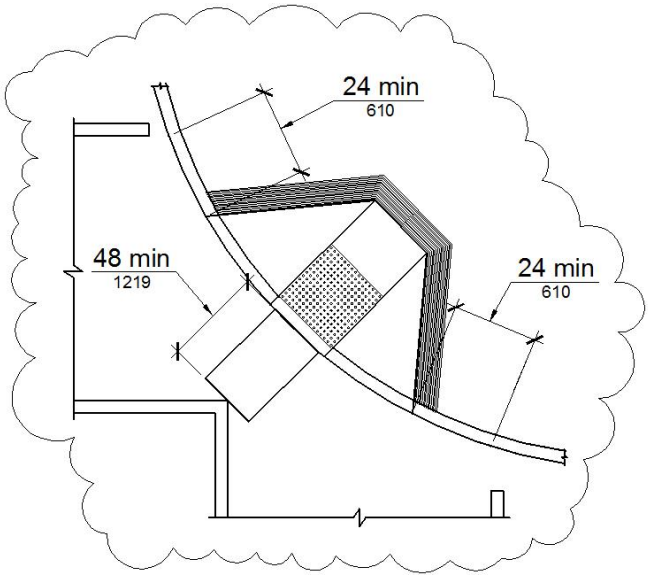

Figure ~~406.6~~ *11B-406.5.10*
Diagonal or Corner Type Curb Ramps

11B-406.5.11 Grooved Border. *Curb ramps shall have a grooved border 12 inches (305 mm) wide along the top of the curb ramp at the level surface of the top landing and at the outside edges of the flared sides. The grooved border shall consist of a series of grooves ¼ inch (6.4 mm) wide by ¼ inch (6.4 mm) deep, at ¾ inch (19 mm) on center.*

EXCEPTIONS: 1. *At parallel curb ramps, the grooved border shall be on the upper approach immediately adjacent to the curb ramp across the full width of the curb ramp.*

2. *A grooved border shall not be required at blended transitions.*

11B-406.5.12 Detectable Warnings. *Curb ramps and blended transitions shall have detectable warnings complying with 11B-705.*

11B-406.6 Islands. *Raised islands in crossings shall be cut through level with the street or have curb ramps at both sides. The clear width of the accessible route at islands shall be 60 inches (1524 mm) wide minimum. Where curb ramps are provided, they shall comply with 11B-406. Landings complying with 11B-406.5.3 and the accessible route shall be permitted to overlap. Islands shall have detectable warnings complying with 11B-705.*

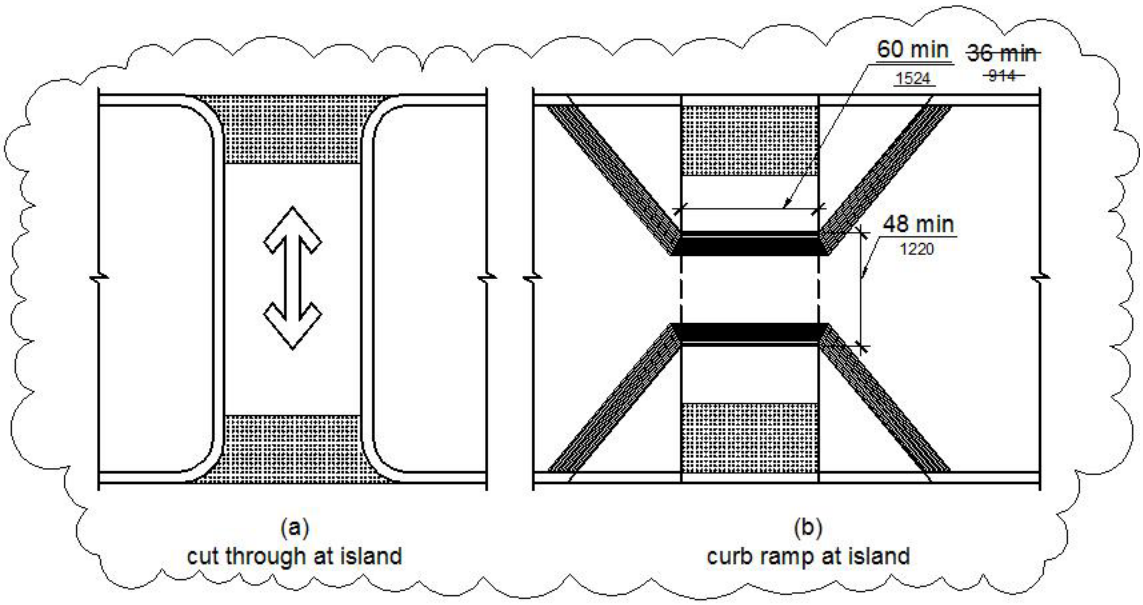

Figure ~~406.7~~ *11B-406.6*
Islands in Crossings

***11B*-407 Elevators**

***11B*-407.1 General.** Elevators shall comply with *11B*-407 and with ASME A17.1 ~~(incorporated by reference, see "Referenced Standards" in Chapter 1)~~. They shall be passenger elevators as classified by ASME A17.1. Elevator operation shall be automatic.

11B-407.1.1 Combined Passenger and Freight Elevators. *When the only elevators provided for use by the public and employees are combination passenger and freight elevators, they shall comply with 11B-407 and with ASME A17.1.*

***11B*-407.2 Elevator Landing Requirements.** Elevator landings shall comply with *11B*-407.2.

***11B*-407.2.1 Call Controls.** Where elevator call buttons or keypads are provided, they shall comply with *11B*-407.2.1 and *11B*-309.4. ~~Call buttons shall be raised or flush~~.

EXCEPTION: ***Reserved.*** ~~Existing elevators shall be permitted to have recessed call buttons.~~

***11B*-407.2.1.1 Height.** Call buttons and keypads shall be located within one of the reach ranges specified in *11B*-308, measured to the centerline of the highest operable part.

EXCEPTION: ***Reserved.*** ~~Existing call buttons and existing keypads shall be permitted to be located at 54 inches (1370 mm) maximum above the finish floor, measured to the centerline of the highest operable part.~~

***11B*-407.2.1.2 Size *and Shape*.** Call buttons shall *have square shoulders*, be ¾ inch (~~19~~ *19.1* mm) minimum in the smallest dimension *and shall be raised ⅛ inch (3.2 mm) plus or minus 1/32 inch (0.8 mm) above the surrounding surface. The buttons shall be activated by a mechanical motion that is detectable.*

EXCEPTION: ***Reserved.*** ~~Existing elevator call buttons shall not be required to comply with 407.2.1.2.~~

***11B*-407.2.1.3 Clear Floor or Ground Space.** A clear floor or ground space complying with *11B*-305 shall be provided at call controls.

***11B*-407.2.1.4 Location.** The call button that designates the up direction shall be located above the call button that designates the down direction.

EXCEPTION: Destination-oriented elevators shall not be required to comply with *11B*-407.2.1.4.

***11B*-407.2.1.5 Signals.** Call buttons shall have visible signals *that will activate* ~~to indicate~~ when each call is registered and *will extinguish* when each call is answered. *Call buttons shall be internally illuminated with a white light over the entire surface of the button.*

EXCEPTIONS: 1. Destination-oriented elevators shall not be required to comply with *11B*-407.2.1.5 provided that visible and audible signals complying with *11B*-407.2.2 indicating which elevator car to enter are provided.

2. *Reserved.* ~~Existing elevators shall not be required to comply with 407.2.1.5.~~

***11B*-407.2.1.6 Keypads.** Where keypads are provided, keypads shall be in a standard telephone keypad arrangement and shall comply with *11B*-407.4.7.2.

***11B*-407.2.2 Hall Signals.** Hall signals, including in-car signals, shall comply with *11B*-407.2.2.

***11B*-407.2.2.1 Visible and Audible Signals.** A visible and audible signal shall be provided at each hoistway entrance to indicate which car is answering a call and the car's direction of travel. Where in-car signals are provided, they shall be visible from the floor area adjacent to the hall call buttons.

EXCEPTIONS: 1. Visible and audible signals shall not be required at each destination-oriented elevator where a visible and audible signal complying with *11B*-407.2.2 is provided indicating the elevator car designation information.

2. *Reserved.* ~~In existing elevators, a signal indicating the direction of car travel shall not be required.~~

***11B*-407.2.2.2 Visible Signals.** Visible signal fixtures shall be centered at 72 inches (~~1830~~ *1829* mm) minimum above the finish floor or ground. The visible signal elements shall be a minimum 2½ inches (64 mm) *high by 2½ inches (64 mm) wide*. ~~measured along the vertical centerline of the element~~. Signals shall be visible from the floor area adjacent to the hall call button.

EXCEPTIONS: 1. Destination-oriented elevators shall be permitted to have signals visible from the floor area adjacent to the hoistway entrance.

2. *Reserved.* ~~Existing elevators shall not be required to comply with 407.2.2.2.~~

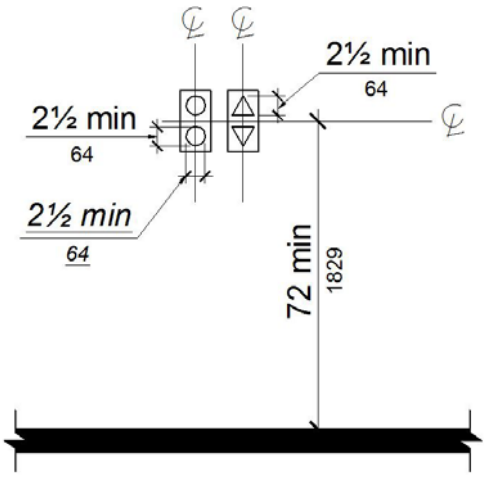

Figure *11B*-407.2.2.2
Visible Hall Signals

***11B*-407.2.2.3 Audible Signals.** Audible signals shall sound once for the up direction and twice for the down direction, or shall have verbal annunciators that indicate the direction of elevator car travel. Audible signals shall have a frequency of 1500 Hz maximum. Verbal annunciators shall have a frequency of 300 Hz minimum and 3000 Hz maximum. The audible signal and verbal annunciator shall be 10 dB minimum above ambient, but shall not exceed 80 dB, measured at the hall call button.

EXCEPTIONS: 1. Destination-oriented elevators shall not be required to comply with *11B*-407.2.2.3 provided that the audible tone and verbal announcement is the same as those given at the call button or call button keypad.

2. *Reserved.* ~~Existing elevators shall not be required to comply with the requirements for frequency and dB range of audible signals.~~

***11B*-407.2.2.4 Differentiation.** Each destination-oriented elevator in a bank of elevators shall have audible and visible means for differentiation.

***11B*-407.2.3 Hoistway Signs.** Signs at elevator hoistways shall comply with *11B*-407.2.3.

***11B*-407.2.3.1 Floor Designation.** Floor designations complying with *11B*-703.2 and *11B*-703.4.1 shall be provided on both jambs of elevator hoistway entrances. Floor designations shall be provided in both ~~tactile~~ *raised* characters and Braille. ~~Tactile~~ *Raised* characters shall be 2 inches (51 mm) high ~~minimum~~. A ~~tactile~~ *raised* star*, placed to the left of the floor designation,* shall be provided on both jambs at the main entry level. *The outside diameter of the star shall be 2 inches (51 mm) and all points shall be of equal length. Raised characters, including the star, shall be white on a black background. Braille complying with Section 11B-703.3 shall be placed below the corresponding raised characters and the star. The Braille translation for the star shall be "MAIN". Applied plates are acceptable if they are permanently fixed to the jamb.*

.

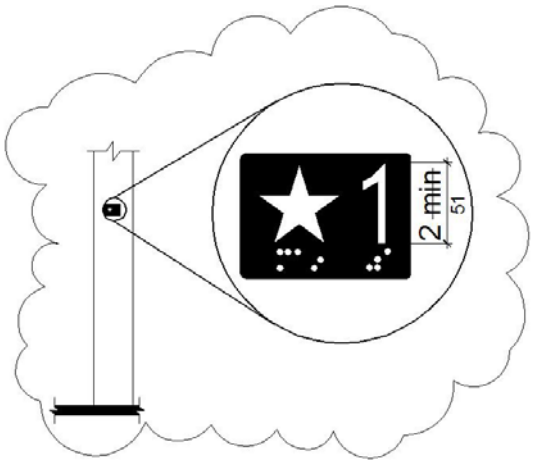

Figure *11B*-407.2.3.1
Floor Designations on Jambs of Elevator Hoistway Entrances

***11B*-407.2.3.2 Car Designations.** Destination-oriented elevators shall provide tactile car identification complying with *11B*-703.2 *and 11B-703.4.1* on both jambs of the hoistway immediately below the floor designation. Car designations shall be provided in both ~~tactile~~ *raised* characters and Braille. ~~Tactile~~ *Raised* characters shall be 2 inches (51 mm) high ~~minimum~~. *Raised characters shall be white on a black background. Braille complying with Section 11B-703.3 shall be placed below the corresponding raised characters. Applied plates are acceptable if they are permanently fixed to the jamb.*

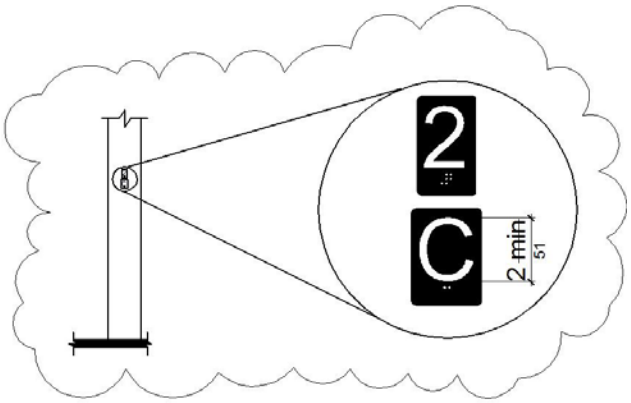

Figure *11B*-407.2.3.2
Car Designations on Jambs of Destination-Oriented Elevator Hoistway Entrances

***11B*-407.3 Elevator Door Requirements.** Hoistway and car doors shall comply with *11B*-407.3.

***11B*-407.3.1 Type.** Elevator doors shall be the horizontal sliding type. Car gates shall be prohibited.

***11B*-407.3.2 Operation.** Elevator hoistway and car doors shall open and close automatically.

EXCEPTION: Existing manually operated hoistway swing doors shall be permitted provided that they comply with *11B*-404.2.3 and *11B*-404.2.9. Car door closing shall not be initiated until the hoistway door is closed.

***11B*-407.3.3 Reopening Device.** Elevator doors shall be provided with a reopening device complying with *11B*-407.3.3 that shall stop and reopen a car door and hoistway door automatically if the door becomes obstructed by an object or person.

EXCEPTION: Existing elevators with manually operated doors shall not be required to comply with *11B*-407.3.3.

***11B*-407.3.3.1 Height.** The device shall be activated by sensing an obstruction passing through the opening at 5 inches (~~125~~ *127* mm) nominal and 29 inches (~~735~~ *737* mm) nominal above the finish floor.

***11B*-407.3.3.2 Contact.** The device shall not require physical contact to be activated, although contact is permitted to occur before the door reverses.

***11B*-407.3.3.3 Duration.** Door reopening devices shall remain effective for 20 seconds minimum.

***11B*-407.3.4 Door and Signal Timing.** The minimum acceptable time from notification that a car is answering a call or notification of the car assigned at the means for the entry of destination information until the doors of that car start to close shall be calculated from the following equation:

T = D/(1.5 ft/s) or T = D/(455 mm/s) = 5 seconds minimum where T equals the total time in seconds and D equals the distance (in feet or millimeters) from the point in the lobby or corridor 60 inches (~~1525~~ *1524* mm) directly in front of the farthest call button controlling that car to the centerline of its hoistway door.

EXCEPTIONS: 1. For cars with in-car lanterns, T shall be permitted to begin when the signal is visible from the point 60 inches (~~1525~~ *1524* mm) directly in front of the farthest hall call button and the audible signal is sounded.

2. Destination-oriented elevators shall not be required to comply with *11B*-407.3.4.

***11B*-407.3.5 Door Delay.** Elevator doors shall remain fully open in response to a car call for ~~3~~ *5* seconds minimum.

***11B*-407.3.6 Width.** The width of elevator doors shall comply with Table *11B*-407.4.1.

EXCEPTION: In existing elevators, a power-operated car door complying with *11B*-404.2.3 shall be permitted.

***11B*-407.4 Elevator Car Requirements.** Elevator cars shall comply with *11B*-407.4.

***11B*-407.4.1 Car Dimensions.** Inside dimensions of elevator cars and clear width of elevator doors shall comply with Table *11B*-407.4.1.

EXCEPTION: *In existing buildings, where existing shaft configuration or technical infeasibility prohibits strict compliance with 11B-407.4.1, existing* ~~Existing~~ elevator car configurations that provide a clear floor area of *18 square feet (1.67 m^2)* ~~16 square feet (1.5 m^2)~~ minimum and also provide an inside clear depth 54 inches (~~1370~~ *1372* mm) minimum and a clear width *48 inches (1219 mm)* ~~36 inches (914 mm)~~ minimum shall be permitted.

Table *11B*-407.4.1 Elevator Car Dimensions

	Minimum Dimensions			
Door Location	**Door Clear Width**	**Inside Car, Side to Side**	**Inside Car, Back Wall to Front Return**	**Inside Car, Back Wall to Inside Face of Door**
Centered	42 inches (~~1065~~ *1067* mm)	80 inches (~~2030~~ *2032* mm)	51 inches (1295 mm)	54 inches (~~1370~~ *1372* mm)
Side (off-centered)	36 inches (~~915~~ *914* mm)[1]	68 inches (~~1725~~ *1727* mm)	51 inches (1295 mm)	54 inches (~~1370~~ *1372* mm)
Any	36 inches (~~915~~ *914* mm)[1]	54 inches (~~1370~~ *1372* mm)	80 inches (~~2030~~ *2032* mm)	80 inches (~~2030~~ *2032* mm)
Any	36 inches (~~915~~ *914* mm)[2]	60 inches (~~1525~~ *1524* mm)[2]	60 inches (~~1525~~ *1524* mm)[2]	60 inches (~~1525~~ *1524* mm)[2]

1. A tolerance of minus ⅝ inch (~~16~~ *15.9* mm) is permitted.
2. Other car configurations that provide a turning space complying with *11B*-304 with the door closed shall be permitted.

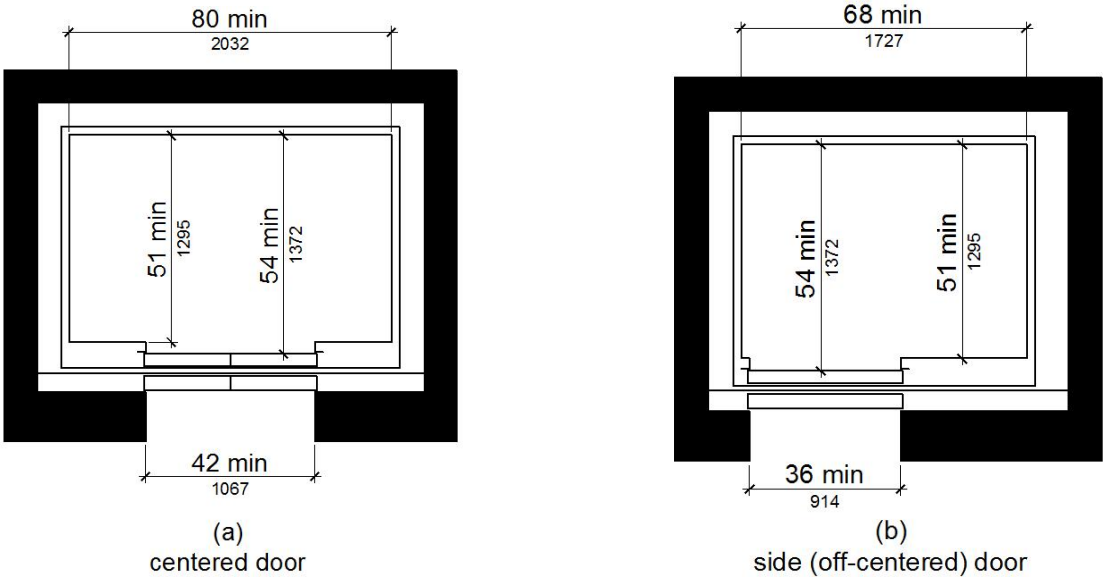

Figure *11B*-407.4.1
Elevator Car Dimensions

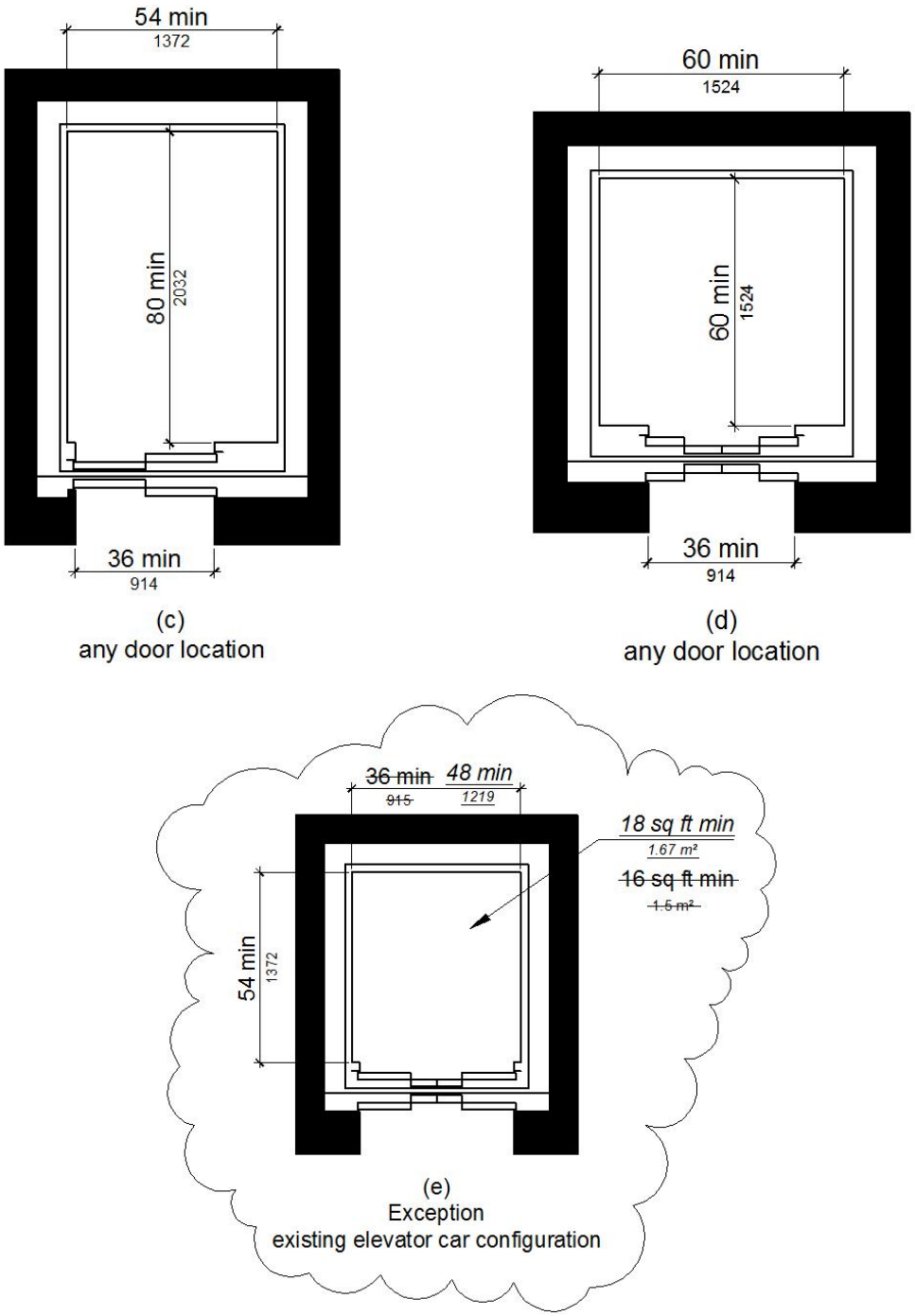

Figure *11B*-407.4.1
Elevator Car Dimensions

***11B*-407.4.2 Floor Surfaces.** Floor surfaces in elevator cars shall comply with *11B*-302 and *11B*-303.

***11B*-407.4.3 Platform to Hoistway Clearance.** The clearance between the car platform sill and the edge of any hoistway landing shall be 1¼ inch (32 mm) maximum.

***11B*-407.4.4 Leveling.** Each car shall be equipped with a self-leveling feature that will automatically bring and maintain the car at floor landings within a tolerance of ½ inch (~~13~~ *12.7* mm) under rated loading to zero loading conditions.

***11B*-407.4.5 Illumination.** The level of illumination at the car controls, platform, car threshold and car landing sill shall be 5 foot candles (54 lux) minimum.

***11B*-407.4.6 Elevator Car Controls.** Where provided, elevator car controls shall comply with *11B*-407.4.6 and *11B*-309.4.

EXCEPTION: In existing elevators, where a new car operating panel complying with *11B*-407.4.6 is provided, existing car operating panels *may remain operational and* shall not be required to comply with *11B*-407.4.6.

***11B*-407.4.6.1 Location.** Controls shall be located within one of the reach ranges specified in *11B*-308.

EXCEPTIONS: 1. Where the elevator panel serves more than 16 openings and a parallel approach is provided, buttons with floor designations shall be permitted to be 54 inches (~~1370~~ *1372* mm) maximum above the finish floor.

2. In existing elevators, car control buttons with floor designations shall be permitted to be located 54 inches (~~1370~~ *1372* mm) maximum above the finish floor where a parallel approach is provided.

***11B*-407.4.6.2 Buttons.** Car control buttons with floor designations shall comply with *11B*-407.4.6.2 ~~and shall be raised or flush~~.

EXCEPTION: ***Reserved.*** ~~In existing elevators, buttons shall be permitted to be recessed or flush.~~

***11B*-407.4.6.2.1 Size *and Shape*.** Buttons shall *have square shoulders*, be 3/4 inch (~~19~~ *19.1* mm) minimum in their smallest dimension *and be raised 1/8 inch (3.2 mm) plus or minus 1/32 inch (0.8 mm) above the surrounding surface*.

***11B*-407.4.6.2.2 Arrangement.** Buttons shall be arranged with numbers in ascending order. When two or more columns of buttons are provided they shall read from left to right.

11B-407.4.6.2.3 Illumination. *Car control buttons shall be illuminated.*

11B-407.4.6.2.4 Operation. *Car control buttons shall be activated by a mechanical motion that is detectable.*

***11B*-407.4.6.3 Keypads.** Car control keypads shall be in a standard telephone keypad arrangement and shall comply with *11B*-407.4.7.2.

***11B*-407.4.6.4 Emergency Controls.** Emergency controls shall comply with *11B*-407.4.6.4.

***11B*-407.4.6.4.1 Height.** Emergency control buttons shall have their centerlines 35 inches (~~890~~ *889* mm) minimum above the finish floor.

***11B*-407.4.6.4.2 Location.** Emergency controls, including the emergency alarm, shall be grouped at the bottom of the panel.

***11B*-407.4.7 Designations and Indicators of Car Controls.** Designations and indicators of car controls shall comply with *11B*-407.4.7.

EXCEPTION: In existing elevators, where a new car operating panel complying with *11B*-407.4.7 is provided, existing car operating panels *may remain operational and* shall not be required to comply with *11B*-407.4.7.

***11B*-407.4.7.1 Buttons.** Car control buttons shall comply with *11B*-407.4.7.1.

***11B*-407.4.7.1.1 Type.** Control buttons shall be identified by *raised characters or symbols, white on a black background, complying with 11B-703.2 and Braille complying with 11B-703.3.* ~~tactile characters complying with 703.2.~~

***11B*-407.4.7.1.2 Location.** Raised ~~character~~ *characters or symbols* and Braille designations shall be placed immediately to the left of the control button to which the designations apply.

~~**EXCEPTION:** Where space on an existing car operating panel precludes tactile markings to the left of the controls, markings shall be placed as near to the control as possible.~~

***11B*-407.4.7.1.3 Symbols.** The control button for the emergency stop, alarm, door open, door close, main entry floor, and phone, shall be identified with *raised* ~~tactile~~ symbols *and Braille* as shown in Table *11B*-407.4.7.1.3.

Table *11B*-407.4.7.1.3 Elevator Control Button Identification

Control Button	*Raised* ~~Tactile~~ Symbol	Braille Message
Emergency Stop		"ST"OP Three cells
Alarm		AL"AR"M Four cells
Door Open		OP"EN" Three cells
Door Close		CLOSE Five cells
Main Entry Floor		MA"IN" Three cells
Phone		PH"ONE" Four cells

***11B*-407.4.7.1.4 Visible Indicators.** Buttons with floor designations shall be provided with visible indicators to show that a call has been registered. The visible indication shall extinguish when the car arrives at the designated floor.

11B-407.4.7.1.5 Button Spacing. *A minimum clear space of 3/8 inch (9.5 mm) or other suitable means of separation shall be provided between rows of control buttons.*

***11B*-407.4.7.2 Keypads.** Keypads shall be identified by characters complying with *11B*-703.5 and shall be centered on the corresponding keypad button. The number five key shall have a single raised dot. The dot shall be 0.118 inch (3 mm) to 0.120 inch (3.05 mm) base diameter and in other aspects comply with Table *11B*-703.3.1.

***11B*-407.4.8 Car Position Indicators.** Audible and visible car position indicators shall be provided in elevator cars.

***11B*-407.4.8.1 Visible Indicators.** Visible indicators shall comply with *11B*-407.4.8.1.

***11B*-407.4.8.1.1 Size.** Characters shall be ½ inch (~~13~~ *12.7* mm) high minimum.

***11B*-407.4.8.1.2 Location.** Indicators shall be located above the car control panel or above the door.

***11B*-407.4.8.1.3 Floor Arrival.** As the car passes a floor and when a car stops at a floor served by the elevator, the corresponding character shall illuminate.

EXCEPTION: Destination-oriented elevators shall not be required to comply with *11B*-407.4.8.1.3 provided that the visible indicators extinguish when the call has been answered.

***11B*-407.4.8.1.4 Destination Indicator.** In destination-oriented elevators, a display shall be provided in the car with visible indicators to show car destinations.

***11B*-407.4.8.2 Audible Indicators.** Audible indicators shall comply with *11B*-407.4.8.2.

***11B*-407.4.8.2.1 Signal Type.** The signal shall be an automatic verbal annunciator which announces the floor at which the car is about to stop.

EXCEPTION: For elevators other than destination-oriented elevators that have a rated speed of 200 feet per minute (1 m/s) or less, a non-verbal audible signal with a frequency of 1500 Hz maximum which sounds as the car passes or is about to stop at a floor served by the elevator shall be permitted.

***11B*-407.4.8.2.2 Signal Level.** The verbal annunciator shall be 10 dB minimum above ambient, but shall not exceed 80 dB, measured at the annunciator.

***11B*-407.4.8.2.3 Frequency.** The verbal annunciator shall have a frequency of 300 Hz minimum to 3000 Hz maximum.

***11B*-407.4.9 Emergency Communication.** Emergency two-way communication systems shall comply with *11B*-308. *Raised* ~~Tactile~~ symbols ~~and~~ *or* characters*, white on a black background, and Braille* shall be provided adjacent to the device and shall comply with *11B*-703.2 *and 11B-703.3*. *Emergency two-way communication systems between the elevator and a point outside the hoistway shall comply with ASME A17.1.*

***11B-407.4.10 Support Rail.** Support rails shall be provided on at least one wall of the car.*

***11B-407.4.10.1 Location.** Clearance between support rails and adjacent surfaces shall be 1½ inches (38 mm) minimum. Top of support rails shall be 31 inches (787 mm) minimum to 33 inches (838 mm) maximum above the floor of the car. The ends of the support rail shall be 6 inches (152 mm) maximum from adjacent walls.*

***11B-407.4.10.2 Surfaces.** Support rails shall be smooth and any surface adjacent to them shall be free of sharp or abrasive elements.*

***11B-407.4.10.3 Structural Strength.** Allowable stresses shall not be exceeded for materials used when a vertical or horizontal force of 250 pounds (1112 N) is applied at any point on the support rail, fastener, mounting device, or supporting structure.*

11B-408 Limited-Use/Limited-Application Elevators

***11B*-408.1 General.** Limited-use/limited-application elevators shall comply with *11B*-408 and with ASME A17.1 ~~(incorporated by reference, see "Referenced Standards" in Chapter 1)~~. They shall be passenger elevators as classified by ASME A17.1. Elevator operation shall be automatic.

***11B*-408.2 Elevator Landings.** Landings serving limited-use/limited-application elevators shall comply with *11B*-408.2.

***11B*-408.2.1 Call Buttons.** Elevator call buttons and keypads shall comply with *11B*-407.2.1.

***11B*-408.2.2 Hall Signals.** Hall signals shall comply with *11B*-407.2.2.

***11B*-408.2.3 Hoistway Signs.** Signs at elevator hoistways shall comply with *11B*-407.2.3.1.

***11B*-408.3 Elevator Doors.** Elevator hoistway doors shall comply with *11B*-408.3.

***11B*-408.3.1 Sliding Doors.** Sliding hoistway and car doors shall comply with *11B*-407.3.1 through *11B*-407.3.3 and *11B*-408.4.1.

***11B*-408.3.2 Swinging Doors.** Swinging hoistway doors shall open and close automatically and shall comply with *11B*-404, *11B*-407.3.2 and *11B*-408.3.2.

***11B*-408.3.2.1 Power Operation.** Swinging doors shall be power-operated and shall comply with ANSI/BHMA A156.19 (1997 or 2002 edition) ~~(incorporated by reference, see "Referenced Standards" in Chapter 1)~~.

***11B*-408.3.2.2 Duration.** Power-operated swinging doors shall remain open for 20 seconds minimum when activated.

***11B*-408.4 Elevator Cars.** Elevator cars shall comply with *11B*-408.4.

***11B*-408.4.1 Car Dimensions and Doors.** Elevator cars shall provide a clear width 42 inches (~~1065~~ *1067* mm) minimum and a clear depth 54 inches (~~1370~~ *1372* mm) minimum. Car doors shall be positioned at the narrow ends of cars and shall provide 32 inches (~~815~~ *813* mm) minimum clear width.

EXCEPTIONS: 1. Cars that provide a clear width 51 inches (1295 mm) minimum shall be permitted to provide a clear depth 51 inches (1295 mm) minimum provided that car doors provide a clear opening 36 inches (~~915~~ *914* mm) wide minimum.

2. ***Reserved.*** ~~Existing elevator cars shall be permitted to provide a clear width 36 inches (914 mm) minimum, clear depth 54 inches (1372 mm) minimum, and a net clear platform area 15 square feet (1.4 m^2) minimum.~~

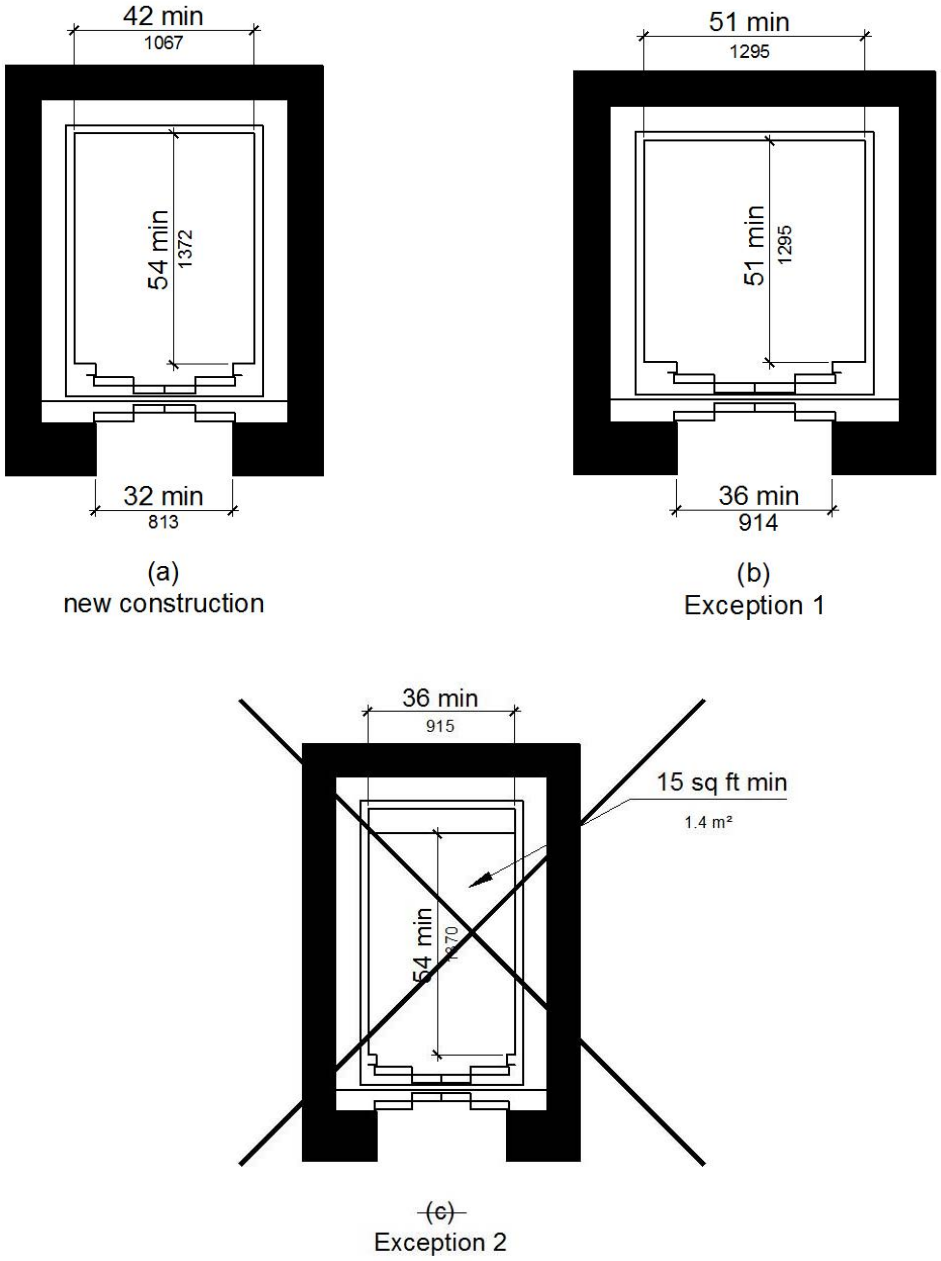

Figure *11B*-408.4.1
Limited-Use/Limited-Application (LULA) Elevator Car Dimensions

***11B*-408.4.2 Floor Surfaces.** Floor surfaces in elevator cars shall comply with *11B*-302 and *11B*-303.

***11B*-408.4.3 Platform to Hoistway Clearance.** The platform to hoistway clearance shall comply with *11B*-407.4.3.

***11B*-408.4.4 Leveling.** Elevator car leveling shall comply with *11B*-407.4.4.

***11B*-408.4.5 Illumination.** Elevator car illumination shall comply with *11B*-407.4.5.

***11B*-408.4.6 Car Controls.** Elevator car controls shall comply with *11B*-407.4.6. Control panels shall be centered on a side wall.

***11B*-408.4.7 Designations and Indicators of Car Controls.** Designations and indicators of car controls shall comply with *11B*-407.4.7.

***11B*-408.4.8 Emergency Communications.** Car emergency signaling devices complying with *11B*-407.4.9 shall be provided.

***11B*-409 Private Residence Elevators**

***11B*-409.1 General.** Private residence elevators that are provided within a residential dwelling unit required to provide mobility features complying with *11B*-809.2 through *11B*-809.4 shall comply with *11B*-409 and with ASME A17.1 ~~(incorporated by reference, see "Referenced Standards" in Chapter 1)~~. They shall be passenger elevators as classified by ASME A17.1. Elevator operation shall be automatic.

***11B*-409.2 Call Buttons.** Call buttons shall be ¾ inch (~~19~~ *19.1* mm) minimum in the smallest dimension and shall comply with *11B*-309.

***11B*-409.3 Elevator Doors.** Hoistway doors, car doors, and car gates shall comply with *11B*-409.3 and *11B*-404.

EXCEPTION: Doors shall not be required to comply with the maneuvering clearance requirements in *11B*-404.2.4.1 for approaches to the push side of swinging doors.

***11B*-409.3.1 Power Operation.** Elevator car and hoistway doors and gates shall be power operated and shall comply with ANSI/BHMA A156.19 ~~(1997 or 2002 edition) (incorporated by reference, see "Referenced Standards" in Chapter 1)~~. Power operated doors and gates shall remain open for 20 seconds minimum when activated.

EXCEPTION: In elevator cars with more than one opening, hoistway doors and gates shall be permitted to be of the manual-open, self-close type.

***11B*-409.3.2 Location.** Elevator car doors or gates shall be positioned at the narrow end of the clear floor spaces required by *11B*-409.4.1.

***11B*-409.4 Elevator Cars.** Private residence elevator cars shall comply with *11B*-409.4.

***11B*-409.4.1 Inside Dimensions of Elevator Cars.** Elevator cars shall provide a clear floor space of 36 inches (~~915~~ *914* mm) minimum by 48 inches (~~1220~~ *1219* mm) minimum and shall comply with *11B*-305.

***11B*-409.4.2 Floor Surfaces.** Floor surfaces in elevator cars shall comply with *11B*-302 and *11B*-303.

***11B*-409.4.3 Platform to Hoistway Clearance.** The clearance between the car platform and the edge of any landing sill shall be 1½ inch (38 mm) maximum.

***11B*-409.4.4 Leveling.** Each car shall automatically stop at a floor landing within a tolerance of ½ inch (~~13~~ *12.7* mm) under rated loading to zero loading conditions.

***11B*-409.4.5 Illumination Levels.** Elevator car illumination shall comply with *11B*-407.4.5.

***11B*-409.4.6 Car Controls.** Elevator car control buttons shall comply with *11B*-409.4.6, *11B*-309.3, *11B*-309.4, and shall be raised or flush.

***11B*-409.4.6.1 Size.** Control buttons shall be 3/4 inch (~~19~~ *19.1* mm) minimum in their smallest dimension.

***11B*-409.4.6.2 Location.** Control panels shall be on a side wall, 12 inches (305 mm) minimum from any adjacent wall.

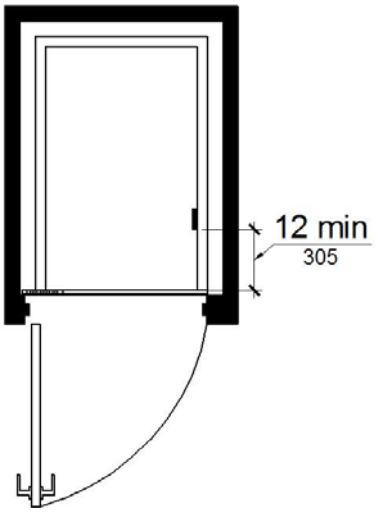

Figure *11B*-409.4.6.2
Location of Private Residence Elevator Control Panel

***11B*-409.4.7 Emergency Communications.** Emergency two-way communication systems shall comply with *11B*-409.4.7.

***11B*-409.4.7.1 Type.** A telephone and emergency signal device shall be provided in the car.

***11B*-409.4.7.2 Operable Parts.** The telephone and emergency signaling device shall comply with *11B*-309.3 and *11B*-309.4.

***11B*-409.4.7.3 Compartment.** If the telephone or device is in a closed compartment, the compartment door hardware shall comply with *11B*-309.

***11B*-409.4.7.4 Cord.** The telephone cord shall be 29 inches (~~735~~ *737* mm) long minimum.

***11B*-410 Platform Lifts**

***11B*-410.1 General.** Platform lifts shall comply with ASME A18.1 (1999 edition or 2003 edition) ~~(incorporated by reference, see "Referenced Standards" in Chapter 1)~~. Platform lifts shall not be attendant-operated and shall provide unassisted entry and exit from the lift.

***11B*-410.2 Floor Surfaces.** Floor surfaces in platform lifts shall comply with *11B*-302 and *11B*-303.

***11B*-410.3 Clear Floor Space.** Clear floor space in platform lifts shall comply with *11B*-305.

***11B*-410.4 Platform to Runway Clearance.** The clearance between the platform sill and the edge of any runway landing shall be 1¼ inch (32 mm) maximum.

***11B*-410.5 Operable Parts.** Controls for platform lifts shall comply with *11B*-309.

***11B*-410.6 Doors and Gates.** Platform lifts shall have low-energy power-operated doors or gates complying with *11B*-404.3. Doors shall remain open for 20 seconds minimum. End doors and gates shall provide a clear width 32 inches (~~815~~ *813* mm) minimum. Side doors and gates shall provide a clear width 42 inches (~~1065~~ *1067* mm) minimum.

EXCEPTION: Platform lifts serving two landings maximum and having doors or gates on opposite sides shall be permitted to have self-closing manual doors or gates.

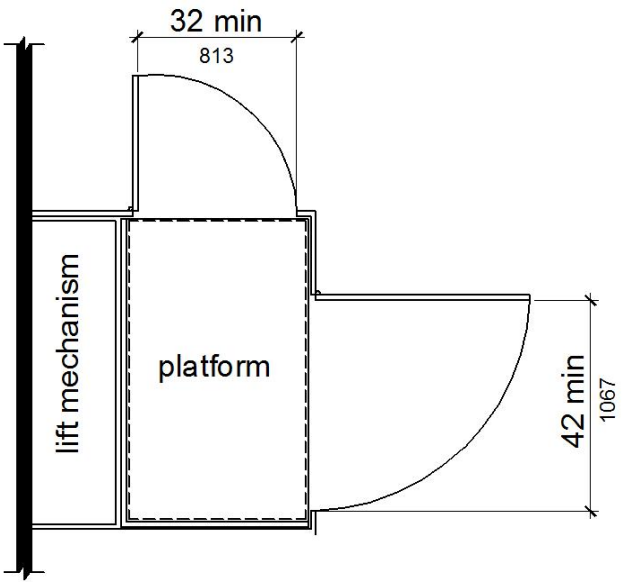

Figure *11B*-410.6
Platform Lift Doors and Gates

11B-410.7 Landing Size. *The minimum size of landings at platform lifts shall be 60 inches by 60 inches (1524 mm by 1524 mm).*

11B-410.8 Restriction Sign. *A sign complying with 11B-703.5 shall be posted in a conspicuous place at each landing and within the platform enclosure stating "No Freight" and include the International Symbol of Accessibility complying with 11B-703.7.2.1.*

11B-501 General

***11B*-501.1 Scope.** The provisions of ~~Chapter~~ *Division* 5 shall apply where required by ~~Chapter~~ *Division* 2 or where referenced by a requirement in this ~~document~~ *chapter*.

11B-502 Parking Spaces

***11B*-502.1 General.** Car and van parking spaces shall comply with *11B*-502. Where parking spaces are marked with lines, width measurements of parking spaces and access aisles shall be made from the centerline of the markings.

> **EXCEPTION:** Where parking spaces or access aisles are not adjacent to another parking space or access aisle, measurements shall be permitted to include the full width of the line defining the parking space or access aisle.

***11B*-502.2 Vehicle Spaces.** *Car and van parking spaces shall be 216 inches (5486 mm) long minimum.* Car parking spaces shall be ~~96 inches (2440 mm)~~ *108 inches (2743 mm)* wide minimum and van parking spaces shall be ~~132 inches (3350 mm)~~ *144 inches (3658 mm)* wide minimum, shall be marked to define the width, and shall have an adjacent access aisle complying with *11B*-502.3.

> **EXCEPTION:** Van parking spaces shall be permitted to be ~~96 inches (2440 mm)~~ *108 inches (2743 mm)* wide minimum where the access aisle is 96 inches (~~2440~~ *2438* mm) wide minimum.

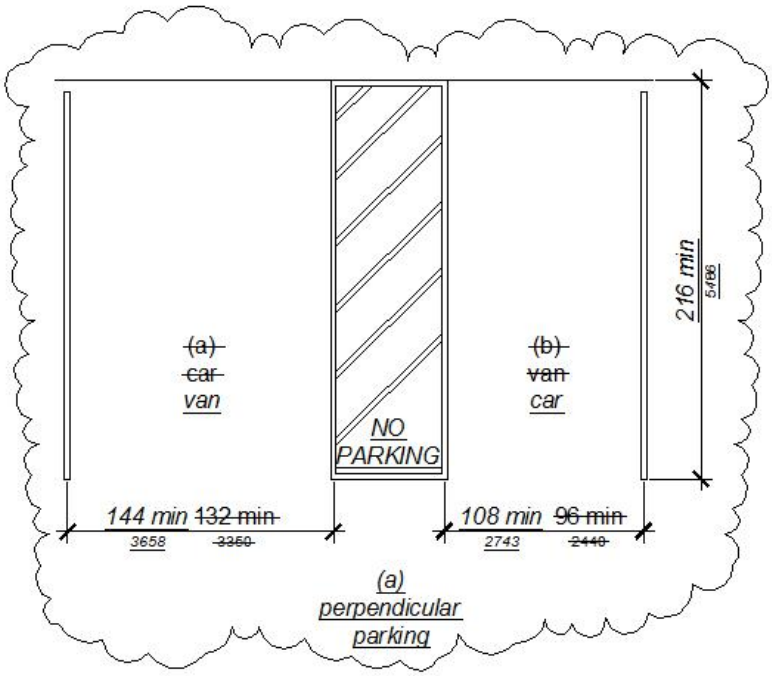

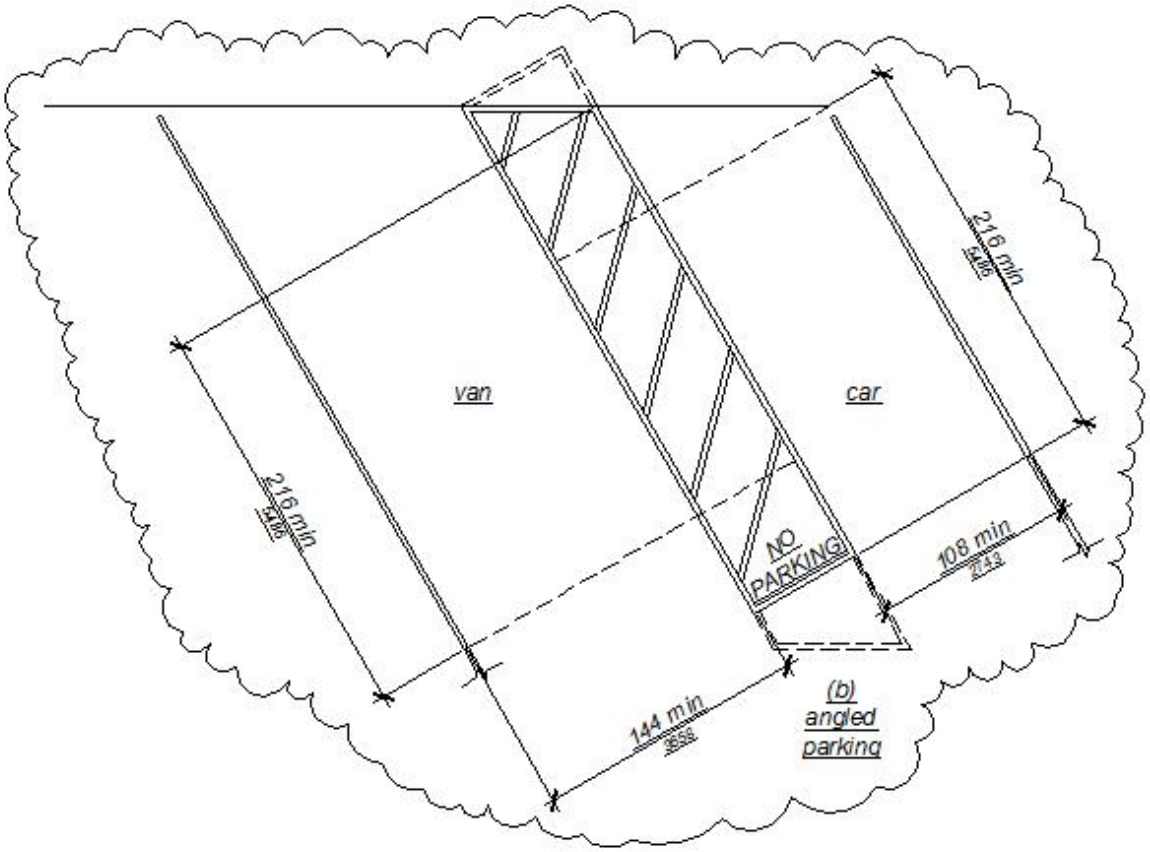

Figure *11B*-502.2
Vehicle Parking Spaces

***11B*-502.3 Access Aisle.** Access aisles serving parking spaces shall comply with *11B*-502.3. Access aisles shall adjoin an accessible route. Two parking spaces shall be permitted to share a common access aisle.

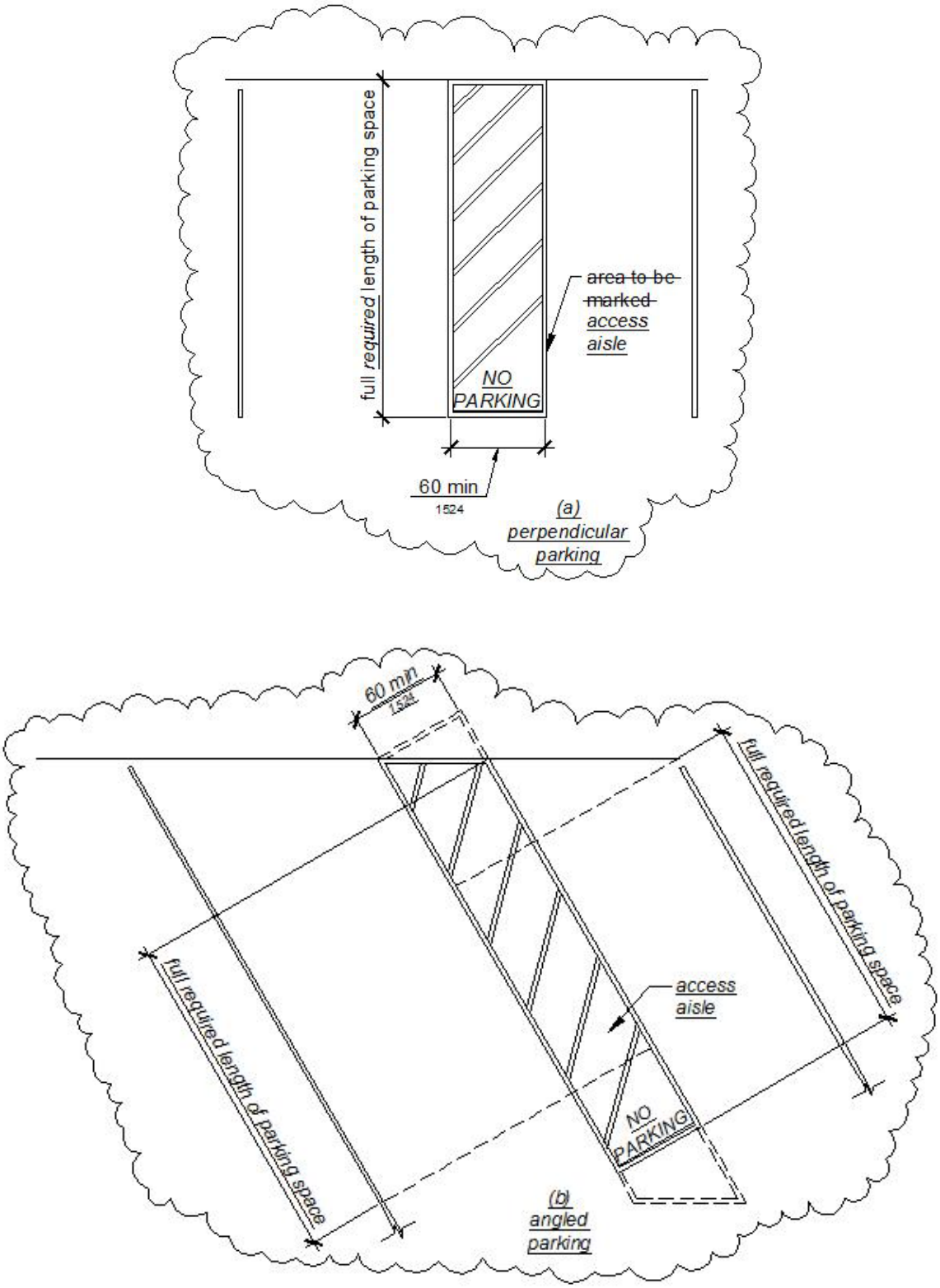

Figure *11B*-502.3
Parking Space Access Aisle

***11B*-502.3.1 Width.** Access aisles serving car and van parking spaces shall be 60 inches (~~1525~~ *1524* mm) wide minimum.

***11B*-502.3.2 Length.** Access aisles shall extend the full *required* length of the parking spaces they serve.

***11B*-502.3.3 Marking.** Access aisles shall be marked ~~so as to discourage parking in them.~~ *with a blue painted borderline around their perimeter. The area within the blue borderlines shall be marked with hatched lines a maximum of 36 inches (914 mm) on center in a color contrasting with that of the aisle surface, preferably blue or white. The words "NO PARKING" shall be painted on the surface within each access aisle in white letters a minimum of 12 inches (305 mm) in height and located to be visible from the adjacent vehicular way. Access aisle markings may extend beyond the minimum required length.*

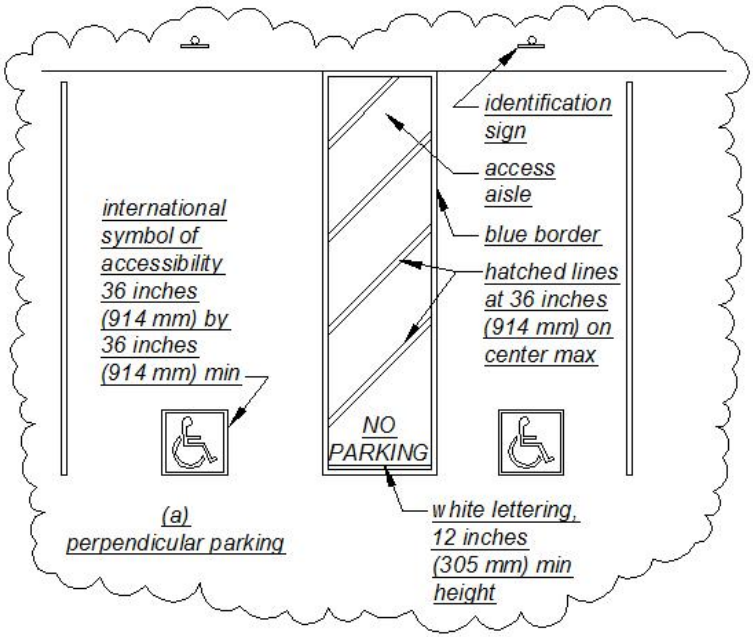

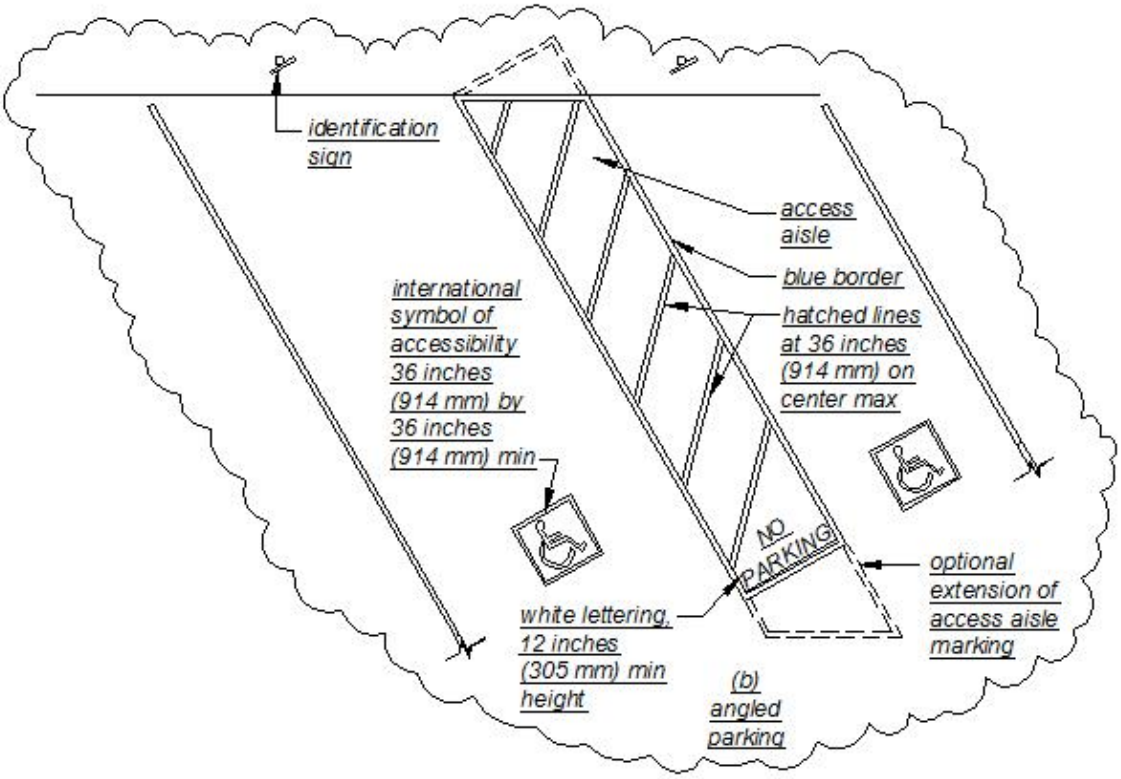

Figure 11B-502.3.3
Angled and Perpendicular Parking Identification

***11B-*502.3.4 Location.** Access aisles shall not overlap the vehicular way. Access aisles shall be permitted to be placed on either side of the parking space except for ~~angled~~ van parking spaces which shall have access aisles located on the passenger side of the parking spaces.

***11B-*502.4 Floor or Ground Surfaces.** Parking spaces and access aisles serving them shall comply with *11B-*302. Access aisles shall be at the same level as the parking spaces they serve. Changes in level are not permitted.

EXCEPTION: Slopes not steeper than 1:48 shall be permitted.

***11B-*502.5 Vertical Clearance.** Parking *spaces,* ~~spaces for vans and~~ access aisles and vehicular routes serving them shall provide a vertical clearance of 98 inches (~~2490~~ *2489* mm) minimum.

***11B-*502.6 Identification.** Parking space identification signs shall include the International Symbol of Accessibility complying with *11B-*703.7.2.1. Signs identifying van parking spaces shall contain *additional language or an additional sign with* the designation "van accessible." Signs shall be 60 inches (~~1525~~ *1524* mm) minimum above the finish floor or ground surface measured to the bottom of the sign.

***EXCEPTION:** Signs located within an accessible route shall be a minimum of 80 inches (2032 mm) above the finish floor or ground surface measured to the bottom of the sign.*

***11B-502.6.1 Finish and Size.** Parking identification signs shall be reflectorized with a minimum area of 70 square inches (45161 mm^2).*

***11B-502.6.2 Minimum Fine.** Additional language or an additional sign below the International Symbol of Accessibility shall state "Minimum Fine $250."*

11B-502.6.3 Location. *A parking space identification sign shall be visible from each parking space. Signs shall be permanently posted either immediately adjacent to the parking space or within the projected parking space width at the head end of the parking space. Signs may also be permanently posted on a wall at the interior end of the parking space.*

11B-502.6.4 Marking. *Each accessible car and van space shall have surface identification complying with either 11B-502.6.4.1 or 11B-502.6.4.2.*

11B-502.6.4.1 *The parking space shall be marked with an International Symbol of Accessibility complying with 11B-703.7.2.1 in white on a blue background a minimum 36 inches wide by 36 inches high (914 mm x 914 mm). The centerline of the International Symbol of Accessibility shall be a maximum of 6 inches (152 mm) from the centerline of the parking space, its sides parallel to the length of the parking space and its lower corner at, or lower side aligned with, the end of the parking space length.*

11B-502.6.4.2 *The parking space shall be outlined or painted blue and shall be marked with an International Symbol of Accessibility complying with 11B-703.7.2.1 a minimum 36 inches wide by 36 inches high (914 mm x 914 mm) in white or a suitable contrasting color. The centerline of the International Symbol of Accessibility shall be a maximum of 6 inches (152 mm) from the centerline of the parking space, its sides parallel to the length of the parking space and its lower corner at, or lower side aligned with, the end of the parking space.*

11B-**502.7 Relationship to Accessible Routes.** Parking spaces and access aisles shall be designed so that cars and vans, when parked, cannot obstruct the required clear width of adjacent accessible routes.

11B-502.7.1 Arrangement. *Parking spaces and access aisles shall be designed so that persons using them are not required to travel behind parking spaces other than to pass behind the parking space in which they parked.*

11B-502.7.2 Wheel Stops. *A curb or wheel stop shall be provided if required to prevent encroachment of vehicles over the required clear width of adjacent accessible routes.*

11B-502.8 Additional Signage. *An additional sign shall be posted either; 1) in a conspicuous place at each entrance to an off-street parking facility or 2) immediately adjacent to on-site accessible parking and visible from each parking space.*

11B-502.8.1 Size. *The additional sign shall not be less than 17 inches (432 mm) wide by 22 inches (559 mm) high.*

11B-502.8.2 Lettering. *The additional sign shall clearly state in letters with a minimum height of 1 inch (25 mm) the following:*

"Unauthorized vehicles parked in designated accessible spaces not displaying distinguishing placards or special license plates issued for persons with disabilities will be towed away at the owner's expense. Towed vehicles may be reclaimed at:_____ or by telephoning _____."

Blank spaces shall be filled in with appropriate information as a permanent part of the sign.

11B-**503 Passenger *Drop-Off and* Loading Zones**

11B-**503.1 General.** Passenger *drop-off and* loading zones shall comply with *11B-*503.

11B-**503.2 Vehicle Pull-Up Space.** Passenger *drop-off and* loading zones shall provide a vehicular pull-up space 96 inches (~~2440~~ *2438* mm) wide minimum and 20 feet (~~6100~~ *6096* mm) long minimum.

***11B*-503.3 Access Aisle.** Passenger *drop-off and* loading zones shall provide access aisles complying with *11B*-503 adjacent *and parallel* to the vehicle pull-up space. Access aisles shall adjoin an accessible route and shall not overlap the vehicular way.

***11B*-503.3.1 Width.** Access aisles serving vehicle pull-up spaces shall be 60 inches (~~1525~~ *1524* mm) wide minimum.

***11B*-503.3.2 Length.** Access aisles shall extend the full length of the vehicle pull-up spaces they serve.

***11B*-503.3.3 Marking.** Access aisles shall be marked ~~so as to discourage parking in them.~~ *with a painted borderline around their perimeter. The area within the borderlines shall be marked with hatched lines a maximum of 36 inches (914 mm) on center in a color contrasting with that of the aisle surface.*

.

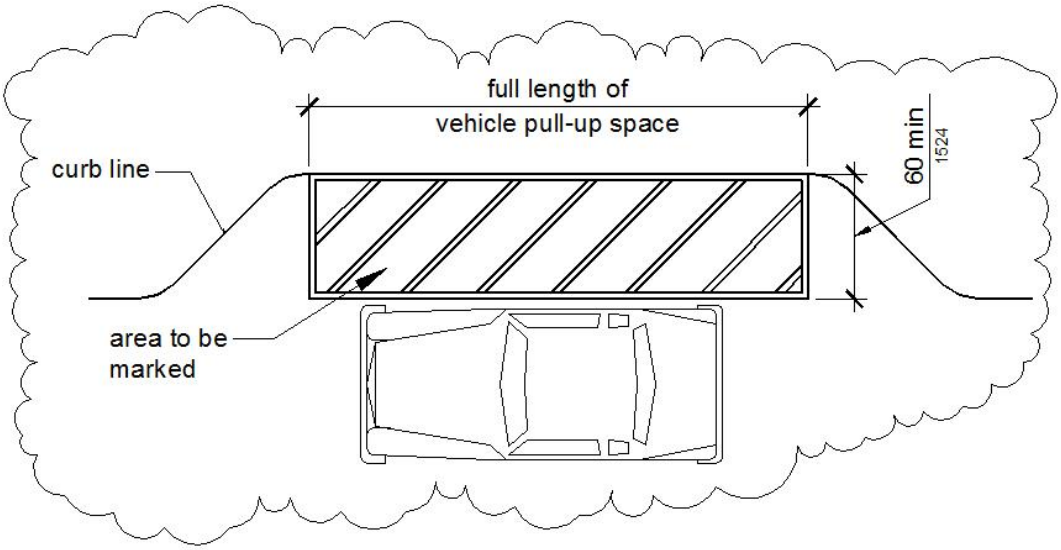

Figure *11B*-503.3
Passenger *Drop-Off and* Loading Zone Access Aisle

***11B*-503.4 Floor and Ground Surfaces.** Vehicle pull-up spaces and access aisles serving them shall comply with *11B*-302. Access aisles shall be at the same level as the vehicle pull-up space they serve. Changes in level are not permitted.

EXCEPTION: Slopes not steeper than 1:48 shall be permitted.

***11B*-503.5 Vertical Clearance.** Vehicle pull-up spaces, access aisles serving them, and a vehicular route from an entrance to the passenger loading zone and from the passenger loading zone to a vehicular exit shall provide a vertical clearance of 114 inches (~~2895~~ *2896* mm) minimum.

***11B-503.6 Identification.** Each passenger loading zone designated for persons with disabilities shall be identified with a reflectorized sign complying with 11B-703.5. It shall be permanently posted immediately adjacent to and visible from the passenger loading zone stating "Passenger Loading Zone Only" and including the International Symbol of Accessibility complying with 11B-703.7.2.1 in white on a dark blue background.*

***11B*-504 Stairways**

***11B*-504.1 General.** Stairs shall comply with *11B*-504.

***11B*-504.2 Treads and Risers.** All steps on a flight of stairs shall have uniform riser heights and uniform tread depths. Risers shall be 4 inches (~~100~~ *102* mm) high minimum and 7 inches (~~180~~ *178* mm) high maximum. Treads shall be 11 inches (~~280~~ *279* mm) deep minimum.

***11B*-504.3 Open Risers.** Open risers are not permitted.

***EXCEPTIONS: 1.** On exterior stairways, an opening of not more than $^1/_2$ inch (12.7 mm) may be permitted between the base of the riser and the tread.*

***2.** On exterior stairways, risers constructed of grating containing openings of not more than $^1/_2$ inch (12.7 mm) may be permitted.*

***11B*-504.4 Tread Surface.** Stair treads shall comply with *11B*-302. Changes in level are not permitted.

EXCEPTION: Treads shall be permitted to have a slope not steeper than 1:48.

***11B-504.4.1 Contrasting Stripe.** Interior stairs shall have the upper approach and lower tread marked by a stripe providing clear visual contrast. Exterior stairs shall have the upper approach and all treads marked by a stripe providing clear visual contrast.*

The stripe shall be a minimum of 2 inches (51 mm) wide to a maximum of 4 inches (102 mm) wide placed parallel to, and not more than 1 inch (25 mm) from, the nose of the step or upper approach. The stripe shall extend the full width of the step or upper approach and shall be of material that is at least as slip resistant as the other treads of the stair. A painted stripe shall be acceptable. Grooves shall not be used to satisfy this requirement.

***11B*-504.5 Nosings.** The radius of curvature at the leading edge of the tread shall be ½ inch (~~13~~ *12.7* mm) maximum. Nosings that project beyond risers shall have the underside of the leading edge curved or beveled. Risers shall be permitted to slope under the tread at an angle of 30 degrees maximum from vertical. The permitted projection of the nosing shall extend ~~1 ½ inches (38 mm)~~ *$1^1/_4$ inches (32 mm)* maximum over the tread below.

***EXCEPTION:** In existing buildings there is no requirement to retroactively alter existing nosing projections of $1^1/_2$ inches (38 mm) which were constructed in compliance with the building code in effect at the time of original construction.*

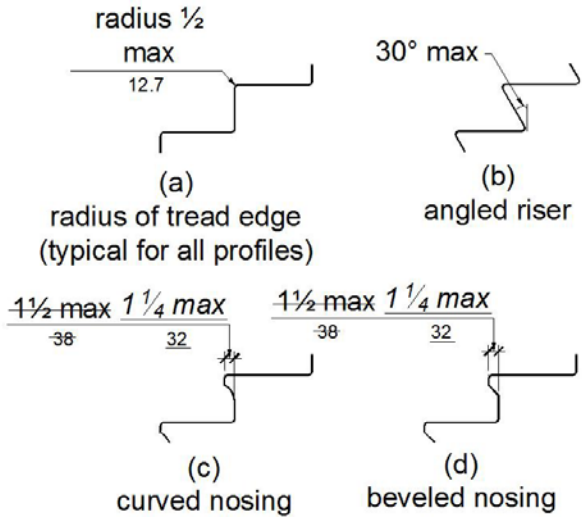

Figure *11B*-504.5
Stair Nosings

***11B*-504.6 Handrails.** Stairs shall have handrails complying with *11B*-505.

***11B*-504.7 Wet Conditions.** Stair treads and landings subject to wet conditions shall be designed to prevent the accumulation of water.

11B-504.8 Floor Identification. *Floor identification signs required by Chapter 10, Section 1022.9 complying with 11B-703.1, 11B-703.2, 11B-703.3 and 11B-703.5 shall be located at the landing of each floor level, placed adjacent to the door on the latch side, in all enclosed stairways in buildings two or more stories in height to identify the floor level. At the exit discharge level, the sign shall include a raised five pointed star located to the left of the identifying floor level. The outside diameter of the star shall be the same as the height of the raised characters.*

***11B*-505 Handrails**

***11B*-505.1 General.** Handrails provided along walking surfaces complying with *11B*-403, required at ramps complying with *11B*-405, and required at stairs complying with *11B*-504 shall comply with *11B*-505.

***11B*-505.2 Where Required.** Handrails shall be provided on both sides of stairs and ramps.

~~**EXCEPTION**~~ ***EXCEPTIONS: 1.*** In assembly areas, handrails shall not be required on both sides of aisle ramps where a handrail is provided at either side or within the aisle width.

2. *Curb ramps do not require handrails.*

3. *At door landings, handrails are not required when the ramp run is less than 6 inches (152 mm) in rise or 72 inches (1829 mm) in length.*

***11B*-505.3 Continuity.** Handrails shall be continuous within the full length of each stair flight or ramp run. Inside handrails on switchback or dogleg stairs and ramps shall be continuous between flights or runs.

EXCEPTION: In assembly areas, *ramp* handrails ~~on ramps~~ *adjacent to seating or within the aisle width* shall not be required to be continuous in aisles serving seating.

***11B*-505.4 Height.** Top of gripping surfaces of handrails shall be 34 inches (~~865~~ *864* mm) minimum and 38 inches (965 mm) maximum vertically above walking surfaces, stair nosings, and ramp surfaces. Handrails shall be at a consistent height above walking surfaces, stair nosings, and ramp surfaces.

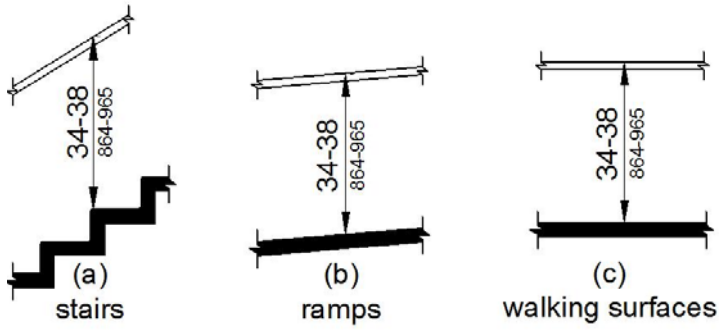

Figure *11B*-505.4
Handrail Height

***11B*-505.5 Clearance.** Clearance between handrail gripping surfaces and adjacent surfaces shall be 1½ inches (38 mm) minimum. *Handrails may be located in a recess if the recess is 3 inches (76 mm) maximum deep and 18 inches (457 mm) minimum clear above the top of the handrail.*

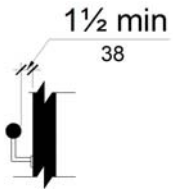

Figure *11B*-505.5
Handrail Clearance

***11B*-505.6 Gripping Surface.** Handrail gripping surfaces shall be continuous along their length and shall not be obstructed along their tops or sides. The bottoms of handrail gripping surfaces shall not be obstructed for more than 20 percent of their length. Where provided, horizontal projections shall occur 1½ inches (38 mm) minimum below the bottom of the handrail gripping surface.

EXCEPTIONS: 1. Where handrails are provided along walking surfaces with slopes not steeper than 1:20, the bottoms of handrail gripping surfaces shall be permitted to be obstructed along their entire length where they are integral to crash rails or bumper guards.

2. The distance between horizontal projections and the bottom of the gripping surface shall be permitted to be reduced by ⅛ inch (3.2 mm) for each ½ inch (~~13~~ *12.7* mm) of additional handrail perimeter dimension that exceeds 4 inches (~~100~~ *102* mm).

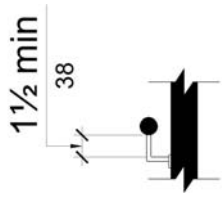

Figure *11B*-505.6
Horizontal Projections Below Gripping Surface

***11B*-505.7 Cross Section.** Handrail gripping surfaces shall have a cross section complying with *11B*-505.7.1 or *11B*-505.7.2.

***11B*-505.7.1 Circular Cross Section.** Handrail gripping surfaces with a circular cross section shall have an outside diameter of 1¼ inches (32 mm) minimum and 2 inches (51 mm) maximum.

***11B*-505.7.2 Non-Circular Cross Sections.** Handrail gripping surfaces with a non-circular cross section shall have a perimeter dimension of 4 inches (~~100~~ *102* mm) minimum and 6¼ inches (~~160~~ *159* mm) maximum, and a cross-section dimension of 2 ¼ inches (57 mm) maximum.

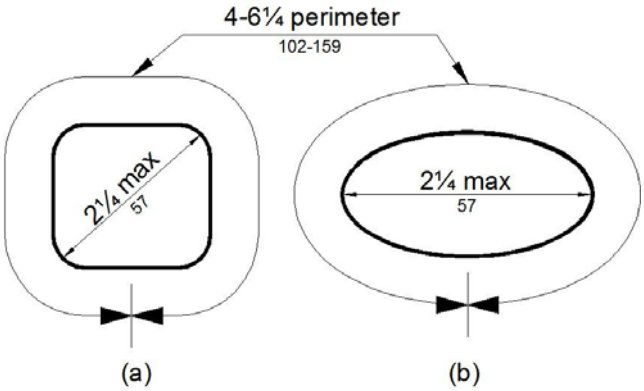

Figure *11B*-505.7.2
Handrail Non-Circular Cross Section

***11B*-505.8 Surfaces.** Handrail gripping surfaces and any surfaces adjacent to them shall be free of sharp or abrasive elements and shall have rounded edges.

***11B*-505.9 Fittings.** Handrails shall not rotate within their fittings.

***11B*-505.10 Handrail Extensions.** Handrail gripping surfaces shall extend beyond and in the same direction of stair flights and ramp runs in accordance with *11B*-505.10.

EXCEPTIONS: 1. Extensions shall not be required for continuous handrails at the inside turn of switchback or dogleg stairs and ramps.

2. In assembly areas, extensions shall not be required for ramp handrails in aisles serving seating where the handrails are discontinuous to provide access to seating and to permit crossovers within aisles.

3. In alterations, ~~full extensions of handrails shall not be required where such extensions would be hazardous due to plan configuration.~~ *where the extension of the handrail in the direction of ramp run would create a hazard, the extension of the handrail may be turned 90 degrees from the ramp run.*

***11B*-505.10.1 Top and Bottom Extension at Ramps.** Ramp handrails shall extend horizontally above the landing for 12 inches (305 mm) minimum beyond the top and bottom of ramp runs. Extensions shall return to a wall, guard, or the landing surface, or shall be continuous to the handrail of an adjacent ramp run.

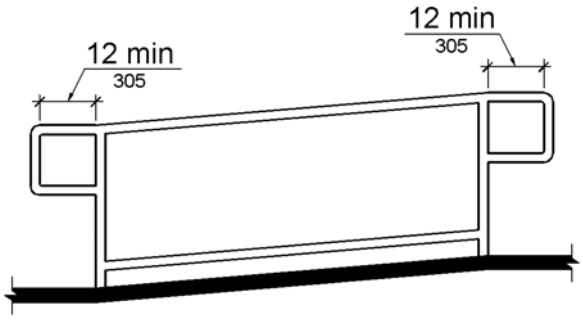

Figure *11B*-505.10.1
Top and Bottom Handrail Extension at Ramps

***11B*-505.10.2 Top Extension at Stairs.** At the top of a stair flight, handrails shall extend horizontally above the landing for 12 inches (305 mm) minimum beginning directly above the first riser nosing. Extensions shall return to a wall, guard, or the landing surface, or shall be continuous to the handrail of an adjacent stair flight.

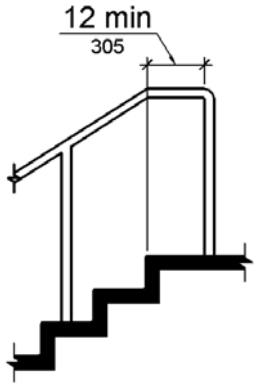

Figure *11B*-505.10.2
Top Handrail Extension at Stairs

***11B*-505.10.3 Bottom Extension at Stairs.** At the bottom of a stair flight, handrails shall extend at the slope of the stair flight for a horizontal distance ~~at least~~ equal to one tread depth beyond the last riser nosing. *Such extension shall continue with a horizontal extension or shall be continuous to the handrail of an adjacent stair flight or shall return to a wall, guard, or the walking surface. At the bottom of a stair flight, a horizontal extension of a handrail shall be 12 inches (305 mm) long minimum and a height equal to that of the sloping portion of the handrail as measured above the stair nosings.* Extension shall return to a wall, guard, or the landing surface, or shall be continuous to the handrail of an adjacent stair flight.

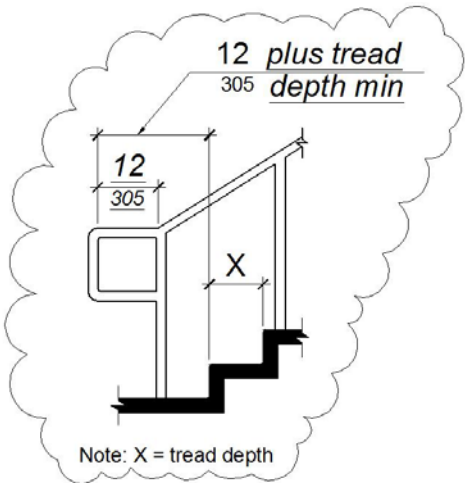

Figure *11B*-505.10.3
Bottom Handrail Extension at Stairs

11B-601 General

11B-601.1 Scope. The provisions of ~~Chapter~~ *Division* 6 shall apply where required by ~~Chapter~~ *Division* 2 or where referenced by a requirement in this ~~document~~ *chapter*.

11B-602 Drinking Fountains

11B-602.1 General. Drinking fountains shall comply with *11B*-307 and *11B*-602.

11B-602.2 Clear Floor Space. Units shall have a clear floor or ground space complying with *11B*-305 positioned for a forward approach and centered on the unit. Knee and toe clearance complying with *11B*-306 shall be provided.

> **EXCEPTION:** A parallel approach complying with *11B*-305 shall be permitted at units for children's use where the spout is 30 inches (~~760~~ *762* mm) maximum above the finish floor or ground and is 3½ inches (~~90~~ *89* mm) maximum from the front edge of the unit, including bumpers.

11B-602.3 Operable Parts. Operable parts shall comply with *11B*-309. *The flow of water shall be activated by a manually operated system that is front mounted or side mounted and located within 6 inches (152 mm) of the front edge of the fountain or an automatic electronically controlled device.*

11B-602.4 Spout Height. Spout outlets shall be 36 inches (~~915~~ *914* mm) maximum above the finish floor or ground.

11B-602.5 Spout Location. The spout shall be located 15 inches (~~380~~ *381* mm) minimum from the vertical support and 5 inches (~~125~~ *127* mm) maximum from the front edge of the unit, including bumpers.

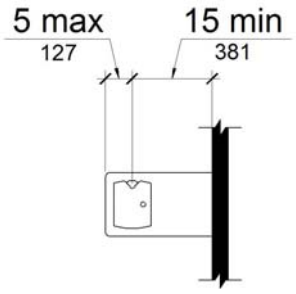

Figure *11B*-602.5
Drinking Fountain Spout Location

11B-602.6 Water Flow. The spout shall provide a flow of water 4 inches (~~100~~ *102* mm) high minimum and shall be located 5 inches (~~125~~ *127* mm) maximum from the front of the unit. The angle of the water stream shall be measured horizontally relative to the front face of the unit. Where spouts are located less than 3 inches (~~75~~ *76* mm) of the front of the unit, the angle of the water stream shall be 30 degrees maximum. Where spouts are located between 3 inches (~~75~~ *76* mm) and 5 inches (~~125~~ *127* mm) maximum from the front of the unit, the angle of the water stream shall be 15 degrees maximum.

11B-602.7 Drinking Fountains for Standing Persons. Spout outlets of drinking fountains for standing persons shall be 38 inches (965 mm) minimum and 43 inches (~~1090~~ *1092* mm) maximum above the finish floor or ground.

11B-602.8 Depth. *Wall- and post-mounted cantilevered drinking fountains shall be 18 inches (457 mm) minimum and 19 inches (483 mm) maximum in depth.*

11B-602.9 Pedestrian Protection. *All drinking fountains shall either be located completely within alcoves, positioned completely between wing walls, or otherwise positioned so as not to encroach into pedestrian ways. The protected area within which a drinking fountain is located shall be 32 inches (813 mm) wide minimum and 18 inches (457 mm) deep minimum, and shall comply with 11B-305.7. When used, wing walls or barriers shall project horizontally at least as far as the drinking fountain and to within 6 inches (152 mm) vertically from the floor or ground surface.*

***11B-*603 Toilet and Bathing Rooms**

***11B-*603.1 General.** Toilet and bathing rooms shall comply with *11B-*603.

***11B-*603.2 Clearances.** Clearances shall comply with *11B-*603.2.

***11B-*603.2.1 Turning Space.** Turning space complying with *11B-*304 shall be provided within the room.

***11B-*603.2.2 Overlap.** Required clear floor spaces, clearance at fixtures, and turning space shall be permitted to overlap.

***11B-*603.2.3 Door Swing.** Doors shall not swing into the clear floor space or clearance required for any fixture. ~~Doors shall be permitted to swing into the required turning space.~~ *Other than the door to the accessible water closet compartment, a door, in any position, may encroach into the turning space by 12 inches (305 mm) maximum.*

EXCEPTIONS: 1. ***Reserved.*** ~~Doors to a toilet room or bathing room for a single occupant accessed only through a private office and not for common use or public use shall be permitted to swing into the clear floor space or clearance provided the swing of the door can be reversed to comply with 603.2.3.~~

2. Where the toilet room or bathing room is for individual use and a clear floor space complying with *11B-*305.3 is provided within the room beyond the arc of the door swing, doors shall be permitted to swing into the clear floor space or clearance required for any fixture.

***11B-*603.3 Mirrors.** Mirrors located above lavatories or countertops shall be installed with the bottom edge of the reflecting surface 40 inches (~~1015~~ *1016* mm) maximum above the finish floor or ground. Mirrors not located above lavatories or countertops shall be installed with the bottom edge of the reflecting surface 35 inches (~~890~~ *889* mm) maximum above the finish floor or ground.

***11B-*603.4 Coat Hooks, ~~and~~ Shelves *and Medicine Cabinets*.** Coat hooks shall be located within one of the reach ranges specified in *11B-*308. Shelves shall be located 40 inches (~~1015~~ *1016* mm) minimum and 48 inches (~~1220~~ *1219* mm) maximum above the finish floor. *Medicine cabinets shall be located with a usable shelf no higher than 44 inches (1118 mm) maximum above the finish floor.*

11B-603.5 Accessories. *Where towel or sanitary napkin dispensers, waste receptacles, or other accessories are provided in toilet facilities, at least one of each type shall be located on an accessible route. All operable parts, including coin slots, shall be 40 inches (1016 mm) maximum above the finish floor.*

11B-603.6 Guest Room Toilet and Bathing Rooms. *Toilet and bathing rooms within guest rooms that are not required to provide mobility features complying with 11B-806.2 shall provide all toilet and bathing fixtures in a location that allows a person using a wheelchair measuring 30 inches by 48 inches (762 mm by 1219 mm) to touch the wheelchair to any lavatory, urinal, water closet, tub, sauna, shower stall and any other similar sanitary installation, if provided.*

***11B-*604 Water Closets and Toilet Compartments**

***11B*-604.1 General.** Water closets and toilet compartments shall comply with *11B*-604.2 through *11B*-604.8.

EXCEPTION: Water closets and toilet compartments for children's use shall be permitted to comply with *11B*-604.9.

***11B*-604.2 Location.** The water closet shall be positioned with a wall or partition to the rear and to one side. The centerline of the water closet shall be ~~16 inches (405 mm)~~ *17 inches (432 mm)* minimum to 18 inches (~~455~~ *457* mm) maximum from the side wall or partition, except that the water closet shall be 17 inches (~~430~~ *432* mm) minimum and 19 inches (~~485~~ *483* mm) maximum from the side wall or partition in the ambulatory accessible toilet compartment specified in *11B*-604.8.2. Water closets shall be arranged for a left-hand or right-hand approach.

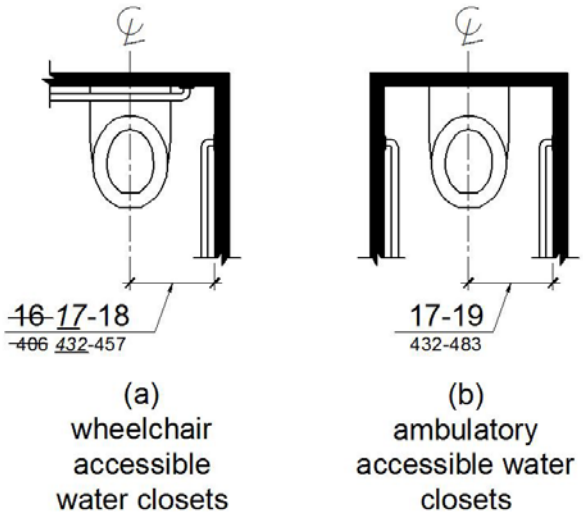

Figure *11B*-604.2
Water Closet Location

***11B*-604.3 Clearance.** Clearances around water closets and in toilet compartments shall comply with *11B*-604.3.

***11B*-604.3.1 Size.** Clearance around a water closet shall be 60 inches (~~1525~~ *1524* mm) minimum measured perpendicular from the side wall and 56 inches (~~1420~~ *1422* mm) minimum measured perpendicular from the rear wall. *A minimum 60 inches (1524 mm) wide and 48 inches (1219 mm) deep maneuvering space shall be provided in front of the water closet.*

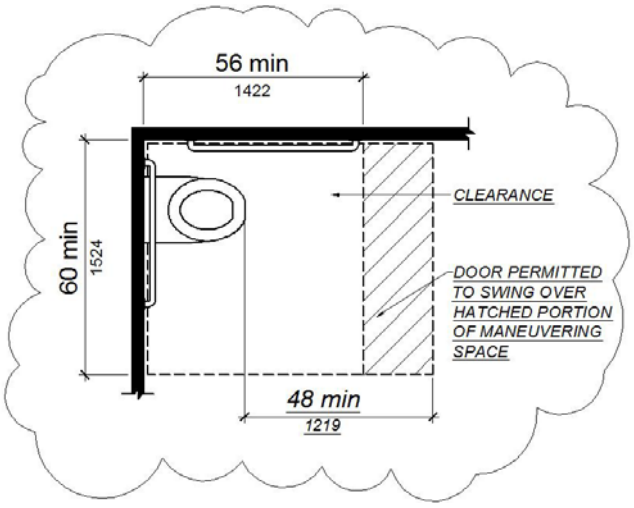

Figure *11B*-604.3.1
Size of Clearance at Water Closets

***11B*-604.3.2 Overlap.** The required clearance around the water closet shall be permitted to overlap the water closet, associated grab bars, dispensers, sanitary napkin disposal units, coat hooks, shelves, accessible routes, clear floor space and clearances required at other fixtures, and the turning space. No other fixtures or obstructions shall be located within the required water closet clearance.

EXCEPTION: In residential dwelling units, a lavatory complying with *11B*-606 shall be permitted on the rear wall 18 inches (~~455~~ *457* mm) minimum from the water closet centerline where the clearance at the water closet is 66 inches (~~1675~~ *1676* mm) minimum measured perpendicular from the rear wall.

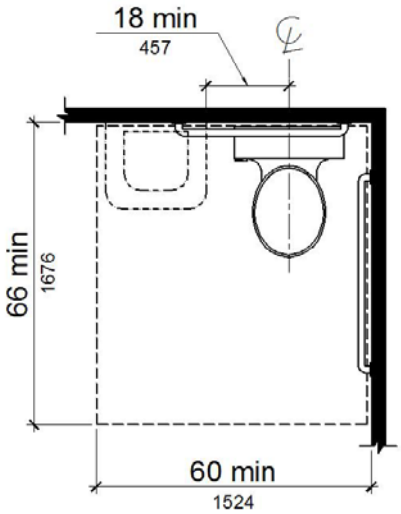

Figure *11B*-604.3.2 (Exception)
Overlap of Water Closet Clearance in Residential Dwelling Units

***11B*-604.4 Seats.** The seat height of a water closet above the finish floor shall be 17 inches (~~430~~ *432* mm) minimum and 19 inches (~~485~~ *483* mm) maximum measured to the top of the seat. Seats shall not be sprung to return to a lifted position. *Seats shall be 2 inches (51 mm) high maximum.*

EXCEPTIONS: 1. ***Reserved***. ~~A water closet in a toilet room for a single occupant accessed only through a private office and not for common use or public use shall not be required to comply with 604.4.~~

2. In residential dwelling units, the height of water closets shall be permitted to be 15 inches (~~380~~ *381* mm) minimum and 19 inches (~~485~~ *483* mm) maximum above the finish floor measured to the top of the seat.

3. *A 3-inch (76 mm) high seat shall be permitted only in alterations where the existing fixture is less than 15 inches (381 mm) high.*

***11B*-604.5 Grab Bars.** Grab bars for water closets shall comply with *11B*-609. Grab bars shall be provided on the side wall closest to the water closet and on the rear wall. *Where separate grab bars are required on adjacent walls at a common mounting height, an L-shaped grab bar meeting the dimensional requirements of 11B-604.5.1 and 11B-604.5.2 shall be permitted.*

EXCEPTIONS: 1. ***Reserved.*** ~~Grab bars shall not be required to be installed in a toilet room for a single occupant accessed only through a private office and not for common use or public use provided that reinforcement has been installed in walls and located so as to permit the installation of grab bars complying with 604.5.~~

2. In residential dwelling units, grab bars shall not be required to be installed in toilet or bathrooms provided that reinforcement has been installed in walls and located so as to permit the installation of grab bars complying with *11B*-604.5.

3. In detention or correction facilities, grab bars shall not be required to be installed in housing or holding cells that are specially designed without protrusions for purposes of suicide prevention.

***11B*-604.5.1 Side Wall.** The side wall grab bar shall be 42 inches (~~1065~~ *1067* mm) long minimum, located 12 inches (305 mm) maximum from the rear wall and extending 54 inches (~~1370~~ *1372* mm) minimum from the rear wall *with the front end positioned 24 inches (610 mm) minimum in front of the water closet*.

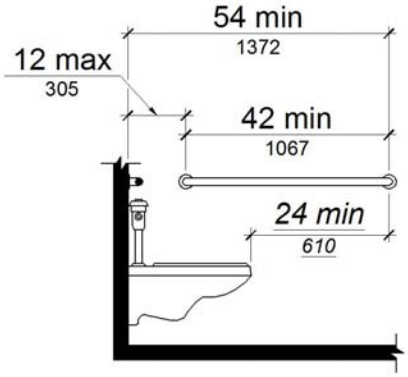

Figure *11B*-604.5.1
Side Wall Grab Bar at Water Closets

***11B*-604.5.2 Rear Wall.** The rear wall grab bar shall be 36 inches (~~915~~ *914* mm) long minimum and extend from the centerline of the water closet 12 inches (305 mm) minimum on one side and 24 inches (610 mm) minimum on the other side.

EXCEPTIONS: 1. The rear grab bar shall be permitted to be 24 inches (610 mm) long minimum, centered on the water closet, where wall space does not permit a length of 36 inches (~~915~~ *914* mm) minimum due to the location of a recessed fixture adjacent to the water closet.

2. Where an administrative authority requires flush controls for flush valves to be located in a position that conflicts with the location of the rear grab bar, then the rear grab bar shall be permitted to be split or shifted to the open side of the toilet area.

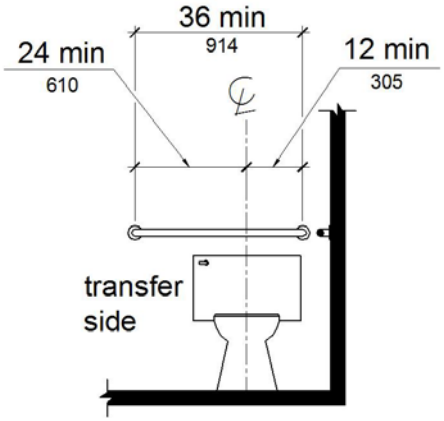

Figure *11B*-604.5.2
Rear Wall Grab Bar at Water Closets

***11B*-604.6 Flush Controls.** Flush controls shall be hand operated or automatic. Hand operated flush controls shall comply with *11B*-309 *except they shall be located 44 inches (1118 mm) maximum above the floor*. Flush controls shall be located on the open side of the water closet except in ambulatory accessible compartments complying with *11B*-604.8.2.

***11B*-604.7 Dispensers.** Toilet paper dispensers shall comply with *11B*-309.4 and shall be 7 inches (~~180~~ *178* mm) minimum and 9 inches (~~230~~ *229* mm) maximum in front of the water closet measured to the centerline of the dispenser. The outlet of the dispenser shall be ~~15 inches (380 mm) minimum and 48 inches (1220 mm) maximum~~ *below the grab bar, 19 inches (483 mm) minimum* above the finish floor and shall not be located behind grab bars. Dispensers shall not be of a type that controls delivery or that does not allow continuous paper flow.

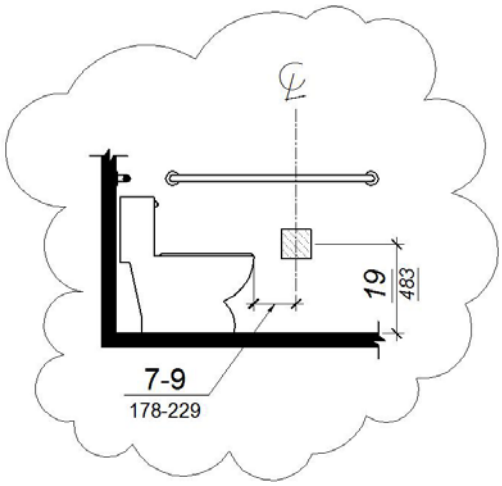

Figure *11B*-604.7
Dispenser Outlet Location

***11B*-604.8 Toilet Compartments.** Wheelchair accessible toilet compartments shall meet the requirements of *11B*-604.8.1 and *11B*-604.8.3. Compartments containing more than one plumbing fixture shall comply with *11B*-603. Ambulatory accessible compartments shall comply with *11B*-604.8.2 and *11B*-604.8.3.

***11B*-604.8.1 Wheelchair Accessible Compartments.** Wheelchair accessible compartments shall comply with *11B*-604.8.1.

***11B*-604.8.1.1 Size.** Wheelchair accessible compartments shall be 60 inches (~~1525~~ *1524* mm) wide minimum measured perpendicular to the side wall, and 56 inches (~~1420~~ *1422* mm) deep minimum for wall hung water closets and 59 inches (~~1500~~ *1499* mm) deep minimum for floor mounted water closets measured perpendicular to the rear wall. Wheelchair accessible compartments for children's use shall be 60 inches (~~1525~~ *1524* mm) wide minimum measured perpendicular to the side wall, and 59 inches (~~1500~~ *1499* mm) deep minimum for wall hung and floor mounted water closets measured perpendicular to the rear wall.

***11B-604.8.1.1.1 Maneuvering Space with In-Swinging Door.** In a wheelchair accessible compartment with an in-swinging door, a minimum 60 inches (1524 mm) wide by 36 inches (914 mm) deep maneuvering space shall be provided in front of the clearance required in 11B-604.8.1.1. See Figures 11B-604.8.1.1.2 (b) and 11B-604.8.1.1.3 (b).*

***11B-604.8.1.1.2 Maneuvering Space with Side-Opening Door.** In a wheelchair accessible compartment with a side-opening door, either in-swinging or out-swinging, a minimum 60 inches (1524 mm) wide and 60 inches (1524 mm) deep maneuvering space shall be provided in front of the water closet. See Figure 11B-604.8.1.1.2.*

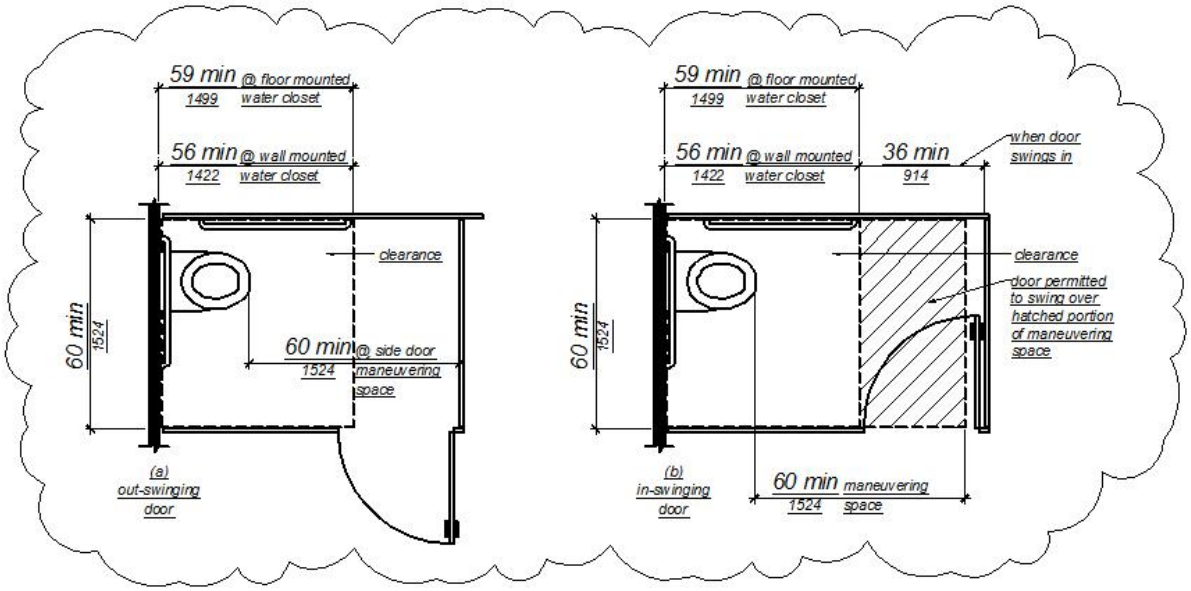

Figure 11B-604.8.1.1.2
Maneuvering Space with Side-Opening Door

***11B-604.8.1.1.3 Maneuvering Space with End-Opening Door.** In a wheelchair accessible compartment with an end-opening door (facing the water closet), either in-swinging or out-swinging, a minimum 60 inches (1524 mm) wide and 48 inches (1219 mm) deep maneuvering space shall be provided in front of the water closet. See Figure 11B-604.8.1.1.3.*

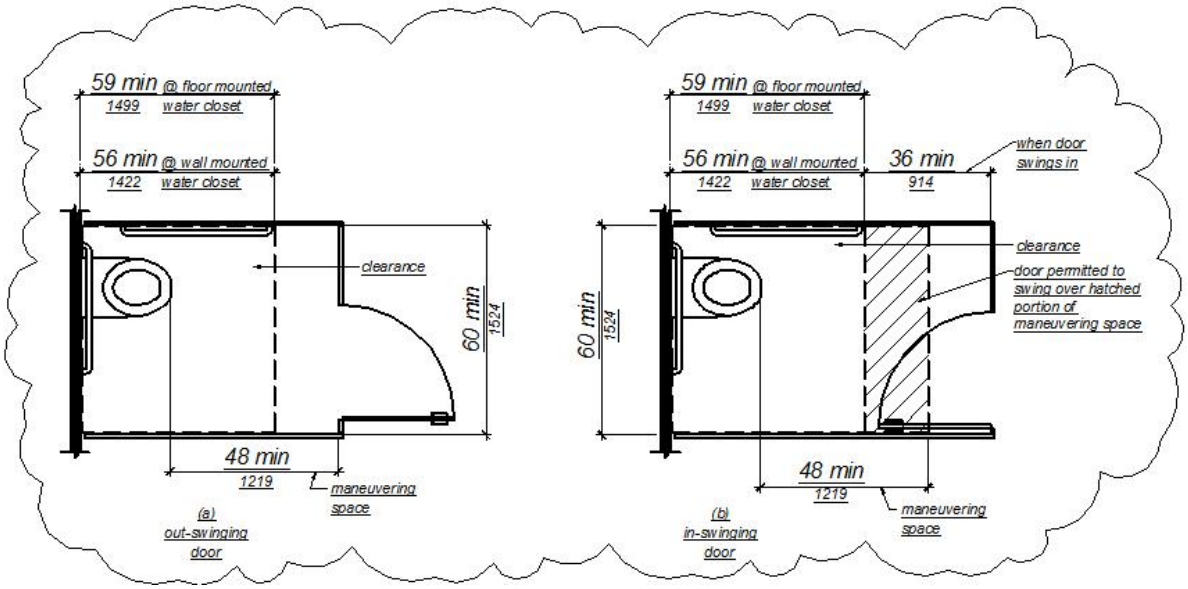

Figure 11B-604.8.1.1.3
Maneuvering Space with End-Opening Door

***11B-*604.8.1.2 Doors.** Toilet compartment doors, including door hardware, shall comply with *11B-*404 except that if the approach is ~~to the latch side~~ *from the push side* of the compartment door, clearance between the door side of the compartment and any obstruction shall be ~~42 inches (1065 mm)~~ *48 inches (1219 mm)* minimum *measured perpendicular to the compartment door in its closed position*. Doors shall be located in the front partition or in the side wall or partition farthest from the water closet. Where located in the front partition, the door opening shall be 4 inches (~~100~~ *102* mm) maximum from the side wall or partition farthest from the water closet. Where located in the side wall or partition, the door opening shall be 4 inches (~~100~~ *102* mm) maximum from the front partition. The door shall be self-closing. A door pull complying with *11B-*404.2.7 shall be placed on both sides of the door near the latch. ~~Toilet compartment doors shall not swing into the minimum required compartment area.~~ *Doors shall not swing into the clear floor space or clearance required for any fixture. Doors may swing into that portion of maneuvering space which does not overlap the clearance required at a water closet.*

***EXCEPTION:** When located at the side of a toilet compartment, the toilet compartment door opening shall provide a clear width of 34 inches (864 mm) minimum.*

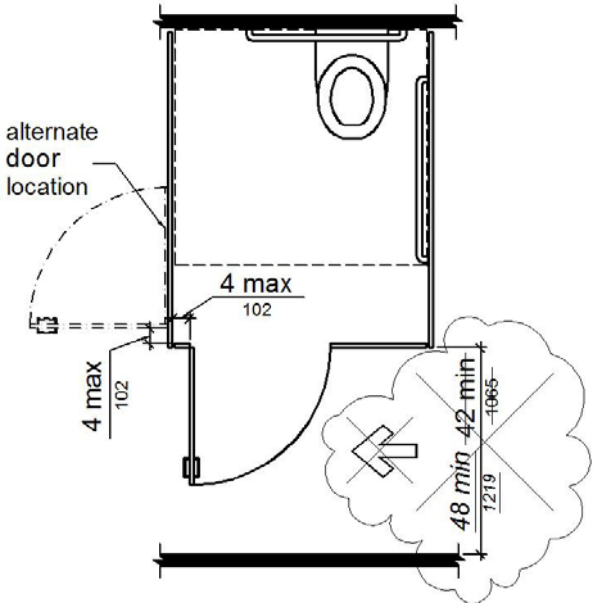

Figure *11B*-604.8.1.2
Wheelchair Accessible Toilet Compartment Doors

***11B*-604.8.1.3 Approach.** Compartments shall be arranged for left-hand or right-hand approach to the water closet.

***11B*-604.8.1.4 Toe Clearance.** ~~The front partition and at~~ *At* least one side partition shall provide a toe clearance of 9 inches (~~230~~ *229* mm) minimum above the finish floor and 6 inches (~~150~~ *152* mm) deep minimum beyond the compartment-side face of the partition, exclusive of partition support members. *Partition components at toe clearances shall be smooth without sharp edges or abrasive surfaces.* Compartments for children's use shall provide a toe clearance of 12 inches (305 mm) minimum above the finish floor.

EXCEPTION: ~~Toe clearance at the front partition is not required in a compartment greater than 62 inches (1575 mm) deep with a wall-hung water closet or 65 inches (1650 mm) deep with a floor-mounted water closet.~~ Toe clearance at the side partition is not required in a compartment greater than 66 inches (~~1675~~ *1676* mm) wide. ~~Toe clearance at the front partition is not required in a compartment for children's use that is greater than 65 inches (1650 mm) deep.~~

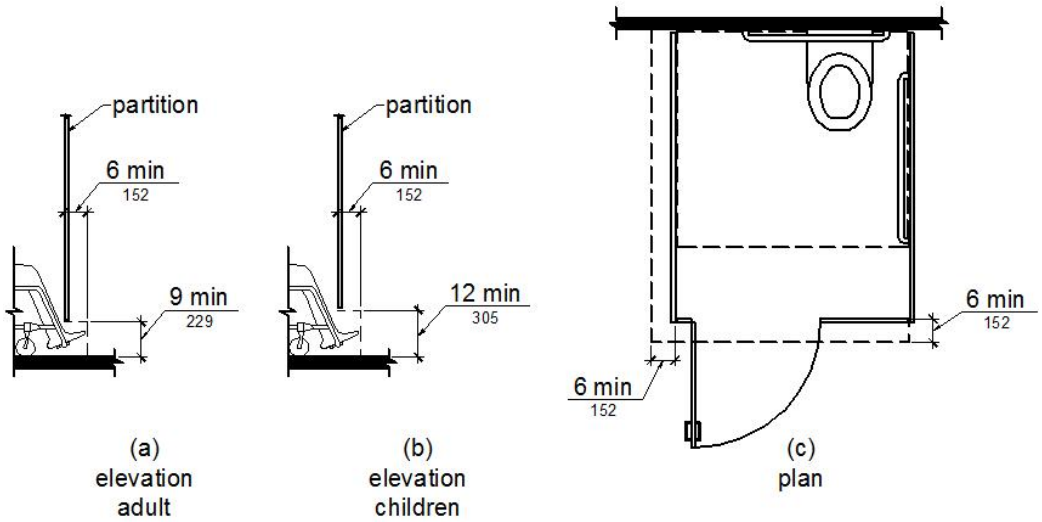

Figure *11B*-604.8.1.4
Wheelchair Accessible Toilet Compartment Toe Clearance

***11B*-604.8.1.5 Grab Bars.** Grab bars shall comply with *11B*-609. A side-wall grab bar complying with *11B*-604.5.1 shall be provided and shall be located on the wall closest to the water closet. In addition, a rear-wall grab bar complying with *11B*-604.5.2 shall be provided. *Where separate grab bars are required on adjacent walls at a common mounting height, an L-shaped grab bar meeting the dimensional requirements of 11B-604.5.1 and 11B-604.5.2 shall be permitted.*

***11B*-604.8.2 Ambulatory Accessible Compartments.** Ambulatory accessible compartments shall comply with *11B*-604.8.2.

***11B*-604.8.2.1 Size.** Ambulatory accessible compartments shall have a depth of 60 inches (~~1525~~ *1524* mm) minimum and a width of 35 inches (~~890~~ *889* mm) minimum and 37 inches (940 mm) maximum.

***11B*-604.8.2.2 Doors.** Toilet compartment doors, including door hardware, shall comply with *11B*-404, except that if the approach is to the latch side of the compartment door, clearance between the door side of the compartment and any obstruction shall be ~~42 inches (1065 mm)~~ *44 inches (1118 mm)* minimum. The door shall be self-closing. A door pull complying with *11B*-404.2.7 shall be placed on both sides of the door near the latch. Toilet compartment doors shall not swing into the minimum required compartment area.

***11B*-604.8.2.3 Grab Bars.** Grab bars shall comply with *11B*-609. A side-wall grab bar complying with *11B*-604.5.1 shall be provided on both sides of the compartment.

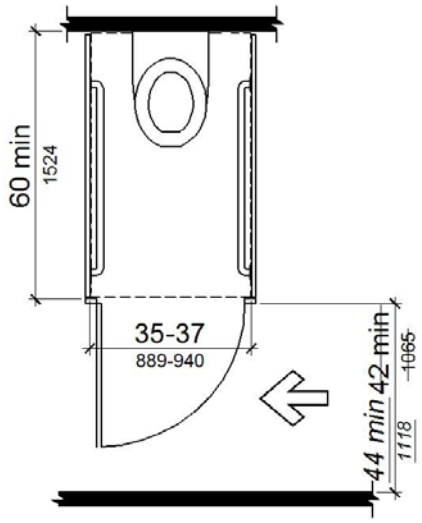

Figure *11B*-604.8.2
Ambulatory Accessible Toilet Compartment

***11B*-604.8.3 Coat Hooks and Shelves.** Coat hooks shall be located within one of the reach ranges specified in *11B*-308. Shelves shall be located 40 inches (~~1015~~ *1016* mm) minimum and 48 inches (~~1220~~ *1219* mm) maximum above the finish floor.

***11B*-604.9 Water Closets and Toilet Compartments for Children's Use.** Water closets and toilet compartments for children's use shall comply with *11B*-604.9.

Table 11B-604.9 Suggested Dimensions for Children's Use

~~Advisory Specifications~~ *Suggested Dimensions* for Water Closets Serving Children Ages 3 through 12			
	Ages 3 and 4	**Ages 5 through 8**	**Ages 9 through 12**
Water Closet Centerline	12 inches (305 mm)	12 to 15 inches (305 to ~~380~~ *381* mm)	15 to 18 inches (~~380~~ *381* to ~~455~~ *457* mm)
Toilet Seat Height	11 to 12 inches (~~280~~ *279* to 305 mm)	12 to 15 inches (305 to ~~380~~ *381* mm)	15 to 17 inches (~~380~~ *381* to ~~430~~ *432* mm)
Grab Bar Height	18 to 20 inches (~~455~~ *457* to ~~510~~ *508* mm)	20 to 25 inches (~~510~~ *508* to 635 mm)	25 to 27 inches (635 to ~~685~~ *686* mm)
Dispenser Height	14 inches (~~355~~ *356* mm)	14 to 17 inches (~~355~~ *356* to ~~430~~ *432* mm)	17 to 19 inches (~~430~~ *432* to ~~485~~ *483* mm)

***11B*-604.9.1 Location.** The water closet shall be located with a wall or partition to the rear and to one side. The centerline of the water closet shall be 12 inches (305 mm) minimum and 18 inches (~~455~~ *457* mm) maximum from the side wall or partition, except that the water closet shall be 17 inches (~~430~~ *432* mm) minimum and 19 inches (~~485~~ *483* mm) maximum from the side wall or partition in the ambulatory accessible toilet compartment specified in *11B*-604.8.2. Compartments shall be arranged for left-hand or right-hand approach to the water closet.

***11B*-604.9.2 Clearance.** Clearance around a water closet shall comply with *11B*-604.3.

***11B*-604.9.3 Height.** The height of water closets shall be 11 inches (~~280~~ *279* mm) minimum and 17 inches (~~430~~ *432* mm) maximum measured to the top of the seat. Seats shall not be sprung to return to a lifted position.

***11B*-604.9.4 Grab Bars.** Grab bars for water closets shall comply with *11B*-604.5.

***11B*-604.9.5 Flush Controls.** Flush controls shall be hand operated or automatic. Hand operated flush controls shall comply with *11B*-309.2 and *11B*-309.4 and shall be installed 36 inches (~~915~~ *914* mm) maximum above the finish floor. Flush controls shall be located on the open side of the water closet except in ambulatory accessible compartments complying with *11B*-604.8.2.

***11B*-604.9.6 Dispensers.** Toilet paper dispensers shall comply with *11B*-309.4 and shall be 7 inches (~~180~~ *178* mm) minimum and 9 inches (~~230~~ *229* mm) maximum in front of the water closet measured to the centerline of the dispenser. The outlet of the dispenser shall be 14 inches (~~355~~ *356* mm) minimum and 19 inches (~~485~~ *483* mm) maximum above the finish floor. There shall be a clearance of 1½ inches (38 mm) minimum below the grab bar. Dispensers shall not be of a type that controls delivery or that does not allow continuous paper flow.

***11B*-604.9.7 Toilet Compartments.** Toilet compartments shall comply with *11B*-604.8.

***11B*-605 Urinals**

***11B*-605.1 General.** Urinals shall comply with *11B*-605.

***11B*-605.2 Height and Depth.** Urinals shall be the stall-type or the wall-hung type with the rim 17 inches (~~430~~ *432* mm) maximum above the finish floor or ground. Urinals shall be 13½ inches (~~345~~ *343* mm) deep minimum measured from the outer face of the urinal rim to the back of the fixture.

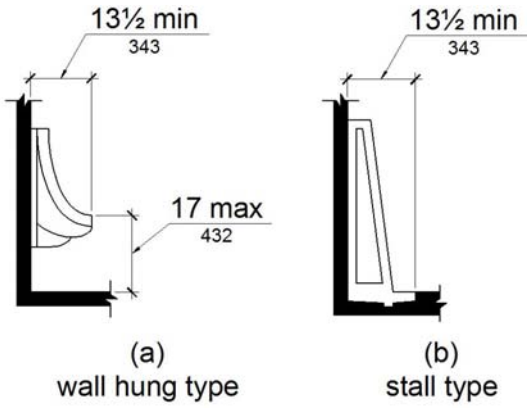

Figure *11B*-605.2
Height and Depth of Urinals

***11B*-605.3 Clear Floor Space.** A clear floor or ground space complying with *11B*-305 positioned for forward approach shall be provided.

***11B*-605.4 Flush Controls.** Flush controls shall be hand operated or automatic. Hand operated flush controls shall comply with *11B*-309 *except that the flush control shall be mounted at a maximum height of 44 inches (1118 mm) above the finish floor*.

***11B*-606 Lavatories and Sinks**

***11B*-606.1 General.** Lavatories and sinks shall comply with *11B*-606.

***11B*-606.2 Clear Floor Space.** A clear floor space complying with *11B*-305, positioned for a forward approach, and knee and toe clearance complying with *11B*-306 shall be provided.

EXCEPTIONS: 1. A parallel approach complying with *11B*-305 shall be permitted to a kitchen sink in a space where a cook top or conventional range is not provided and to wet bars.

2. ***Reserved.*** ~~A lavatory in a toilet room or bathing facility for a single occupant accessed only through a private office and not for common use or public use shall not be required to provide knee and toe clearance complying with 306.~~

3. In residential dwelling units, cabinetry shall be permitted under lavatories and kitchen sinks provided that all of the following conditions are met:

(a) the cabinetry can be removed without removal or replacement of the fixture;
(b) the finish floor extends under the cabinetry; and
(c) the walls behind and surrounding the cabinetry are finished.

4. A knee clearance of 24 inches (610 mm) minimum above the finish floor or ground shall be permitted at lavatories and sinks used primarily by children 6 through 12 years where the rim or counter surface is 31 inches (~~785~~ *787* mm) maximum above the finish floor or ground.

5. A parallel approach complying with *11B*-305 shall be permitted to lavatories and sinks used primarily by children 5 years and younger.

6. The dip of the overflow shall not be considered in determining knee and toe clearances.

7. No more than one bowl of a multi-bowl sink shall be required to provide knee and toe clearance complying with *11B*-306.

***11B*-606.3 Height.** Lavatories and sinks shall be installed with the front of the higher of the rim or counter surface 34 inches (~~865~~ *864* mm) maximum above the finish floor or ground.

EXCEPTIONS: 1. ***Reserved.*** ~~A lavatory in a toilet or bathing facility for a single occupant accessed only through a private office and not for common use or public use shall not be required to comply with 606.3.~~

2. In residential dwelling unit kitchens, sinks that are adjustable to variable heights, 29 inches (~~735~~ *737* mm) minimum and 36 inches (~~915~~ *914* mm) maximum, shall be permitted where rough-in plumbing permits connections of supply and drain pipes for sinks mounted at the height of 29 inches (~~735~~ *737* mm).

***11B*-606.4 Faucets.** Controls for faucets shall comply with *11B*-309. Hand-operated metering faucets shall remain open for 10 seconds minimum.

***11B*-606.5 Exposed Pipes and Surfaces.** Water supply and drain pipes under lavatories and sinks shall be insulated or otherwise configured to protect against contact. There shall be no sharp or abrasive surfaces under lavatories and sinks.

11B-606.6 Adjacent Side Wall or Partition. *Lavatories, when located adjacent to a side wall or partition, shall be a minimum of 18 inches (457 mm) to the centerline of the fixture.*

11B-606.7 Sink Depth. *Sinks shall be 6½ inches (165 mm) deep maximum.*

***11B*-607 Bathtubs**

***11B*-607.1 General.** Bathtubs shall comply with *11B*-607.

***11B*-607.2 Clearance.** Clearance in front of bathtubs shall extend the length of the bathtub and shall be *48 inches (1219 mm) wide minimum for forward approach and* 30 inches (~~760~~ *762* mm) wide minimum *for parallel approach*. A lavatory complying with *11B*-606 shall be permitted at the control end of the clearance. Where a permanent seat is provided at the head end of the bathtub, the clearance shall extend 12 inches (305 mm) minimum beyond the wall at the head end of the bathtub.

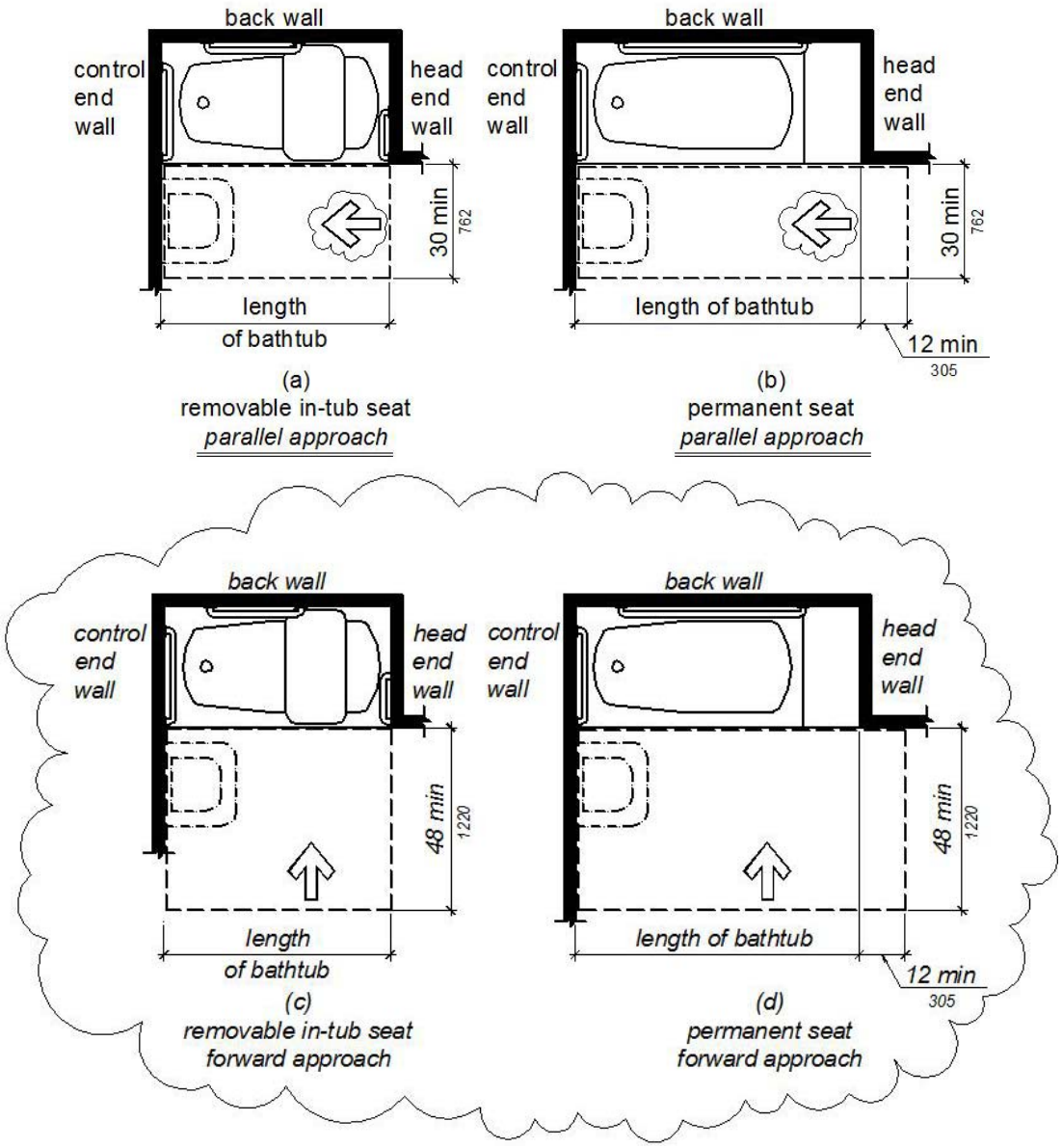

Figure *11B*-607.2
Clearance for Bathtubs

***11B*-607.3 Seat.** A permanent seat at the head end of the bathtub or a removable in-tub seat shall be provided. Seats shall comply with *11B*-610.

***11B*-607.4 Grab Bars.** Grab bars for bathtubs shall comply with *11B*-609 and shall be provided in accordance with *11B*-607.4.1 or *11B*-607.4.2. *Where separate grab bars are required on adjacent walls at a common mounting height, an L-shaped or U-shaped grab bar meeting the dimensional requirements of 11B-607.4.1 or 11B-607.4.2 shall be permitted.*

EXCEPTIONS: 1. ***Reserved.*** ~~Grab bars shall not be required to be installed in a bathtub located in a bathing facility for a single occupant accessed only through a private office and not for common use or public use provided that reinforcement has been installed in walls and located so as to permit the installation of grab bars complying with 607.4.~~

2. In residential dwelling units, grab bars shall not be required to be installed in bathtubs located in bathing facilities provided that reinforcement has been installed in walls and located so as to permit the installation of grab bars complying with *11B*-607.4.

***11B*-607.4.1 Bathtubs With Permanent Seats.** For bathtubs with permanent seats, grab bars shall be provided in accordance with *11B*-607.4.1.

***11B*-607.4.1.1 Back Wall.** Two grab bars shall be installed on the back wall, one located in accordance with *11B*-609.4 and the other located 8 inches (~~205~~ *203* mm) minimum and 10 inches (~~255~~ *254* mm) maximum above the rim of the bathtub. Each grab bar shall be installed 15 inches (~~380~~ *381* mm) maximum from the head end wall and 12 inches (305 mm) maximum from the control end wall.

***11B*-607.4.1.2 Control End Wall.** A grab bar 24 inches (610 mm) long minimum shall be installed on the control end wall at the front edge of the bathtub.

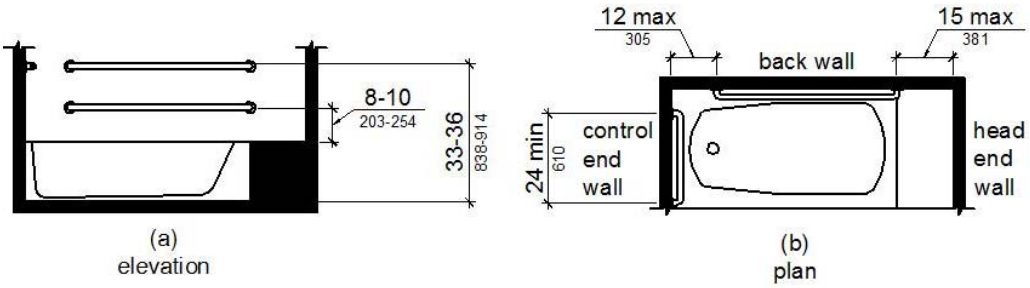

Figure *11B*-607.4.1
Grab Bars for Bathtubs with Permanent Seats

***11B*-607.4.2 Bathtubs Without Permanent Seats.** For bathtubs without permanent seats, grab bars shall comply with *11B*-607.4.2.

***11B*-607.4.2.1 Back Wall.** Two grab bars shall be installed on the back wall, one located in accordance with *11B*-609.4 and other located 8 inches (~~205~~ *203* mm) minimum and 10 inches (~~255~~ *254* mm) maximum above the rim of the bathtub. Each grab bar shall be 24 inches (610 mm) long minimum and shall be installed 24 inches (610 mm) maximum from the head end wall and 12 inches (305 mm) maximum from the control end wall.

***11B*-607.4.2.2 Control End Wall.** A grab bar 24 inches (610 mm) long minimum shall be installed on the control end wall at the front edge of the bathtub.

***11B*-607.4.2.3 Head End Wall.** A grab bar 12 inches (305 mm) long minimum shall be installed on the head end wall at the front edge of the bathtub.

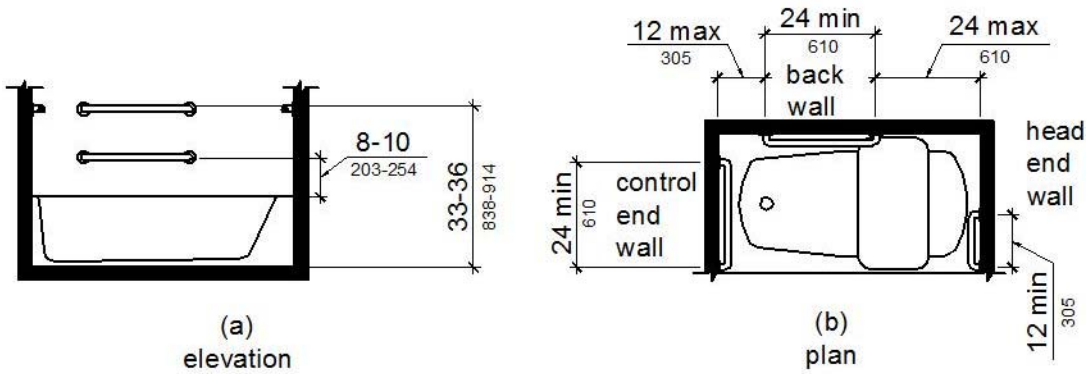

Figure *11B*-607.4.2
Grab Bars for Bathtubs with Removable In-Tub Seats

***11B*-607.5 Controls.** Controls, other than drain stoppers, shall be located on an end wall. Controls shall be between the bathtub rim and grab bar, and between the open side of the bathtub and the centerline of the width of the bathtub. Controls shall comply with *11B*-309.4.

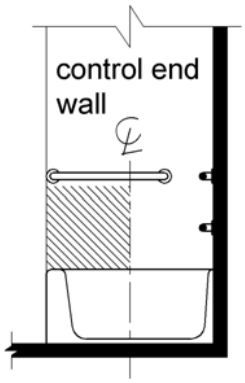

Figure *11B*-607.5
Bathtub Control Location

***11B*-607.6 Shower Spray Unit and Water.** A shower spray unit with a hose 59 inches (~~1500~~ *1499* mm) long minimum that can be used both as a fixed-position shower head and as a hand-held shower shall be provided. The shower spray unit shall have an on/off control with a non-positive shut-off. If an adjustable-height shower head on a vertical bar is used, the bar shall be installed so as not to obstruct the use of grab bars. Bathtub shower spray units shall deliver water that is 120°F (49°C) maximum.

***11B*-607.7 Bathtub Enclosures.** Enclosures for bathtubs shall not obstruct controls, faucets, shower and spray units or obstruct transfer from wheelchairs onto bathtub seats or into bathtubs. Enclosures on bathtubs shall not have tracks installed on the rim of the open face of the bathtub.

***11B*-608 Shower Compartments**

***11B*-608.1 General.** Shower compartments shall comply with *11B*-608.

***11B*-608.2 Size and Clearances for Shower Compartments.** Shower compartments shall have sizes and clearances complying with *11B*-608.2.

> ***11B*-608.2.1 *Reserved.*** ~~**Transfer Type Shower Compartments.** Transfer type shower compartments shall be 36 inches (915 mm) by 36 inches (915 mm) clear inside dimensions measured at the center~~

~~points of opposing sides and shall have a 36 inch (915 mm) wide minimum entry on the face of the shower compartment. Clearance of 36 inches (915 mm) wide minimum by 48 inches (1220 mm) long minimum measured from the control wall shall be provided.~~

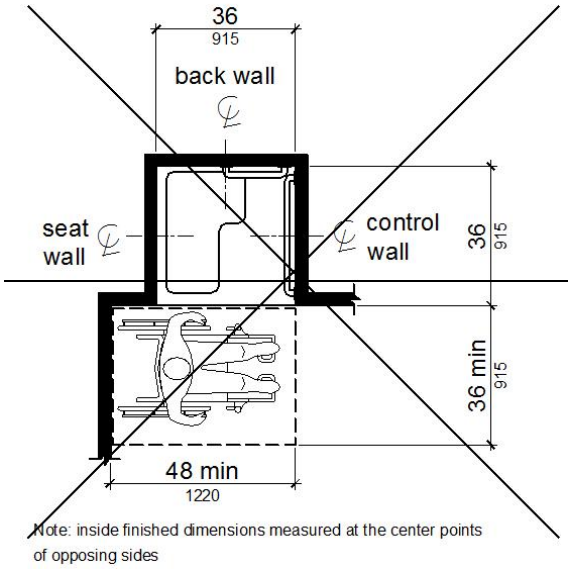

~~Figure 608.2.1~~
~~Transfer Type Shower Compartment Size and Clearance~~

***11B*-608.2.2 Standard Roll-In Type Shower Compartments.** Standard roll-in type shower compartments shall be 30 inches (~~760~~ *762* mm) wide minimum by 60 inches (~~1525~~ *1524* mm) deep minimum clear inside dimensions measured at center points of opposing sides ~~and shall have a 60 inches (1525 mm) wide minimum entry on the face of the shower compartment~~ *with a full opening width on the long side*.

***11B*-608.2.2.1 Clearance.** A ~~30 inch (760 mm)~~ *36 inch (914 mm)* wide minimum by 60 inch (~~1525~~ *1524* mm) long minimum clearance shall be provided adjacent to the open face of the shower compartment.

EXCEPTION: ***Reserved.*** ~~A lavatory complying with 606 shall be permitted on one 30 inch (760 mm) wide minimum side of the clearance provided that it is not on the side of the clearance adjacent to the controls or, where provided, not on the side of the clearance adjacent to the shower seat.~~

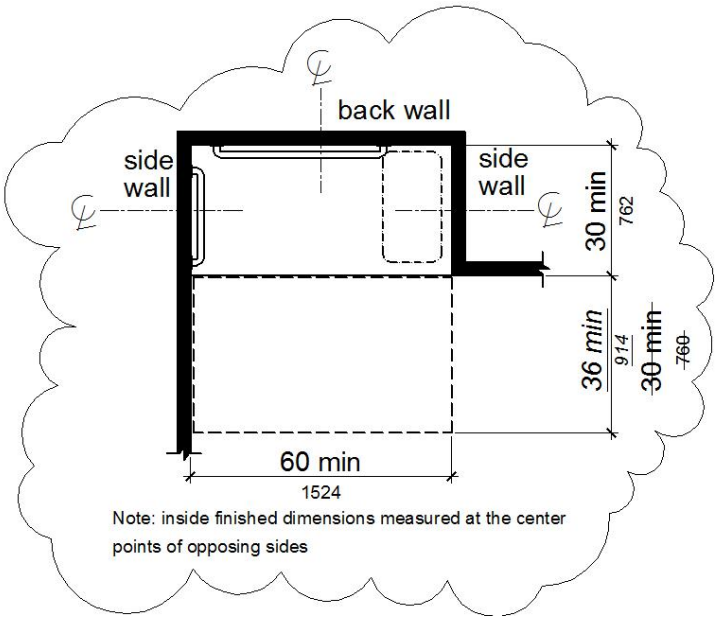

Figure *11B*-608.2.2
Standard Roll-In Type Shower Compartment Size and Clearance

***11B*-608.2.3 Alternate Roll-In Type Shower Compartments.** Alternate roll-in type shower compartments shall be 36 inches (~~915~~ *914* mm) wide and 60 inches (~~1525~~ *1524* mm) deep minimum clear inside dimensions measured at center points of opposing sides. A 36 inch (~~915~~ *914* mm) wide minimum entry shall be provided at one end of the long side of the compartment.

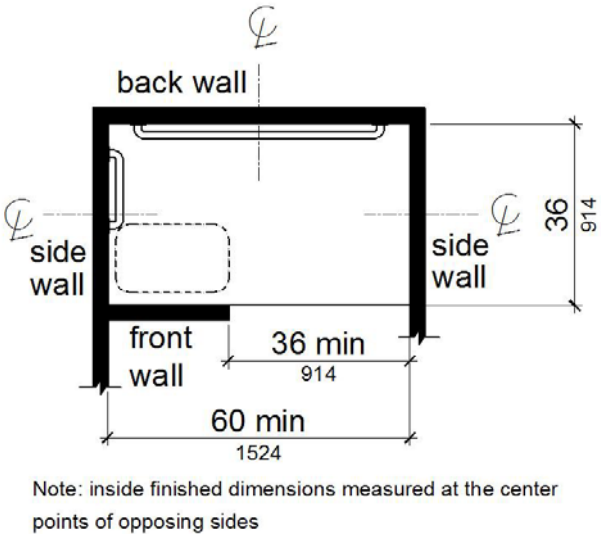

Figure *11B*-608.2.3
Alternate Roll-In Type Shower Compartment Size and Clearance

***11B*-608.3 Grab Bars.** Grab bars shall comply with 609 and shall be provided in accordance with *11B*-608.3. Where multiple grab bars are used, required horizontal grab bars shall be installed at the same height above the finish floor. *Where separate grab bars are required on adjacent walls at a common mounting height, an L-shaped or U-shaped grab bar meeting the dimensional requirements of 11B-608.3.2 or 11B-608.3.3 shall be permitted.*

EXCEPTIONS: 1. ***Reserved.*** ~~Grab bars shall not be required to be installed in a shower located in a bathing facility for a single occupant accessed only through a private office, and not for common use or public use provided that reinforcement has been installed in walls and located so as to permit the installation of grab bars complying with 608.3.~~

2. In residential dwelling units, grab bars shall not be required to be installed in showers located in bathing facilities provided that reinforcement has been installed in walls and located so as to permit the installation of grab bars complying with *11B*-608.3.

11B*-608.3.1** ***Reserved. ~~**Transfer Type Shower Compartments.** In transfer type compartments, grab bars shall be provided across the control wall and back wall to a point 18 inches (455 mm) from the control wall.~~

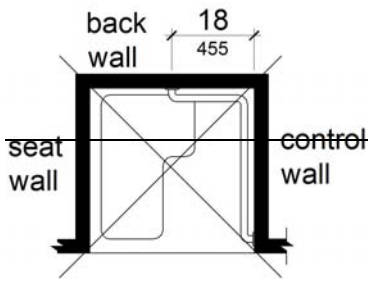

~~**Figure 608.3.1**~~
~~**Grab Bars for Transfer Type Showers**~~

***11B*-608.3.2 Standard Roll-In Type Shower Compartments.** ~~Where a seat is provided in standard roll-in type shower compartments, grab~~ *Grab* bars shall be provided on the back wall and the side wall opposite the seat. Grab bars shall not be provided above the seat. ~~Where a seat is not provided in standard roll-in type shower compartments, grab bars shall be provided on three walls.~~ Grab bars shall be installed 6 inches (~~150~~ *152* mm) maximum from adjacent walls.

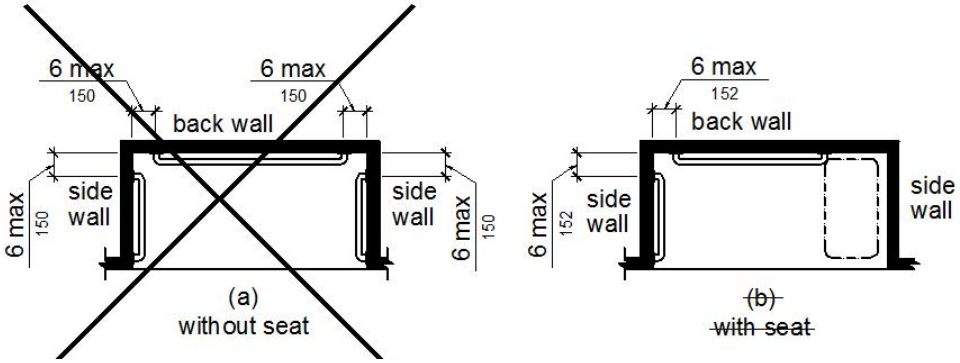

Figure *11B*-608.3.2
Grab Bars for Standard Roll-In Type ~~Showers~~ *Shower*

***11B*-608.3.3 Alternate Roll-In Type Shower Compartments.** In alternate roll-in type shower compartments, grab bars shall be provided on the back wall and the side wall farthest from the compartment entry. Grab bars shall not be provided above the seat. Grab bars shall be installed 6 inches (~~150~~ *152* mm) maximum from adjacent walls.

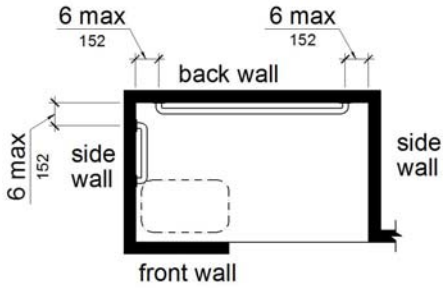

Figure *11B*-608.3.3
Grab Bars for Alternate Roll-In Type Showers

***11B*-608.4 Seats.** ~~A folding or non-folding seat shall be provided in transfer type shower compartments.~~ A folding seat shall be provided in roll-in type showers ~~required in transient lodging guest rooms with mobility features complying with 806.2~~. Seats shall comply with *11B*-610.

EXCEPTION: In residential dwelling units, seats shall not be required in ~~transfer type~~ shower compartments provided that reinforcement has been installed in walls so as to permit the installation of seats complying with *11B*-608.4.

***11B*-608.5 Controls.** Controls, faucets, and shower spray units shall comply with *11B*-309.4. *Controls and faucets shall be of a single-lever design.*

11B*-608.5.1 *Reserved. ~~**Transfer Type Shower Compartments.** In transfer type shower compartments, the controls, faucets, and shower spray unit shall be installed on the side wall opposite the seat 38 inches (965 mm) minimum and 48 inches (1220 mm) maximum above the shower floor and shall be located on the control wall 15 inches (380 mm) maximum from the centerline of the seat toward the shower opening.~~

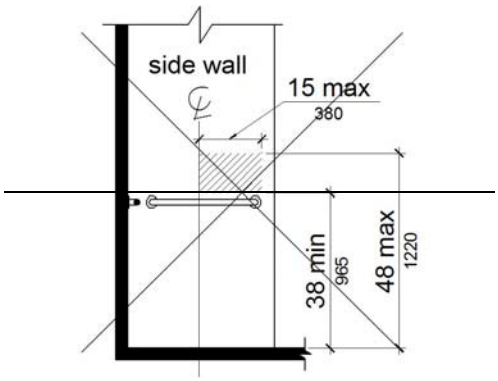

~~**Figure 608.5.1**~~
~~**Transfer Type Shower Compartment Control Location**~~

***11B*-608.5.2 Standard Roll-In Type Shower Compartments.** ~~In standard roll-in type shower compartments, the controls, faucets, and shower spray unit shall be located above the grab bar, but no higher than 48 inches (1220 mm) above the shower floor. Where a seat is provided, the controls, faucets, and shower spray unit shall be installed on the back wall adjacent to the seat wall and shall be located 27 inches (685 mm) maximum from the seat wall.~~

In standard roll-in type shower compartments, operable parts of controls and faucets shall be installed on the back wall of the compartment adjacent to the seat wall 19 inches (483 mm) minimum and 27 inches (686 mm) maximum from the seat wall; and shall be located above the grab bar, but no higher

than 48 inches (1219 mm) above the shower floor, with their centerline at 39 inches (991 mm) to 41 inches (1041 mm) above the shower floor.

Operable parts of the shower spray unit, including the handle, shall be installed on the back wall adjacent to the seat wall 19 inches (483 mm) minimum and 27 inches (686 mm) maximum from the seat wall; and shall be located above the grab bar, but no higher than 48 inches (1219 mm) above the shower floor.

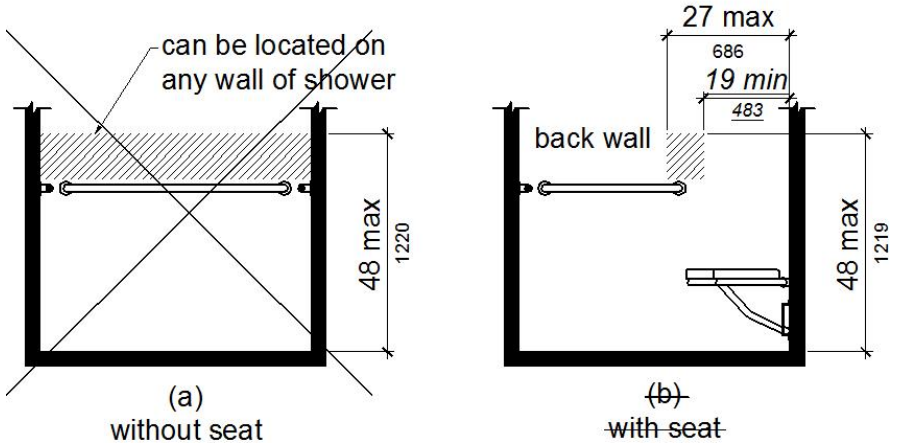

Figure *11B*-608.5.2
Standard Roll-In Type Shower Compartment Control Location

***11B*-608.5.3 Alternate Roll-In Type Shower Compartments.** ~~In alternate roll-in type shower compartments, the controls, faucets, and shower spray unit shall be located above the grab bar, but no higher than 48 inches (1220 mm) above the shower floor. Where a seat is provided, the controls, faucets, and shower spray unit shall be located on the side wall adjacent to the seat 27 inches (685 mm) maximum from the side wall behind the seat or shall be located on the back wall opposite the seat 15 inches (380 mm) maximum, left or right, of the centerline of the seat. Where a seat is not provided, the controls, faucets, and shower spray unit shall be installed on the side wall farthest from the compartment entry.~~

In alternate roll-in type shower compartments, operable parts of controls and faucets shall be installed on the side wall of the compartment adjacent to the seat wall 19 inches (483 mm) minimum and 27 inches (686 mm) maximum from the seat wall; and shall be located above the grab bar, but no higher than 48 inches (1219 mm) above the shower floor, with their centerline at 39 inches (991 mm) to 41 inches (1041 mm) above the shower floor.

Operable parts of the shower spray unit, including the handle, shall be installed on the side wall of the compartment adjacent to the seat wall 17 inches (432 mm) minimum and 19 inches (483 mm) maximum from the seat wall or on the back wall opposite the seat 15 inches (381 mm) maximum, left or right, of the centerline of the seat; and shall be located above the grab bar, but no higher than 48 inches (1219 mm) above the shower floor.

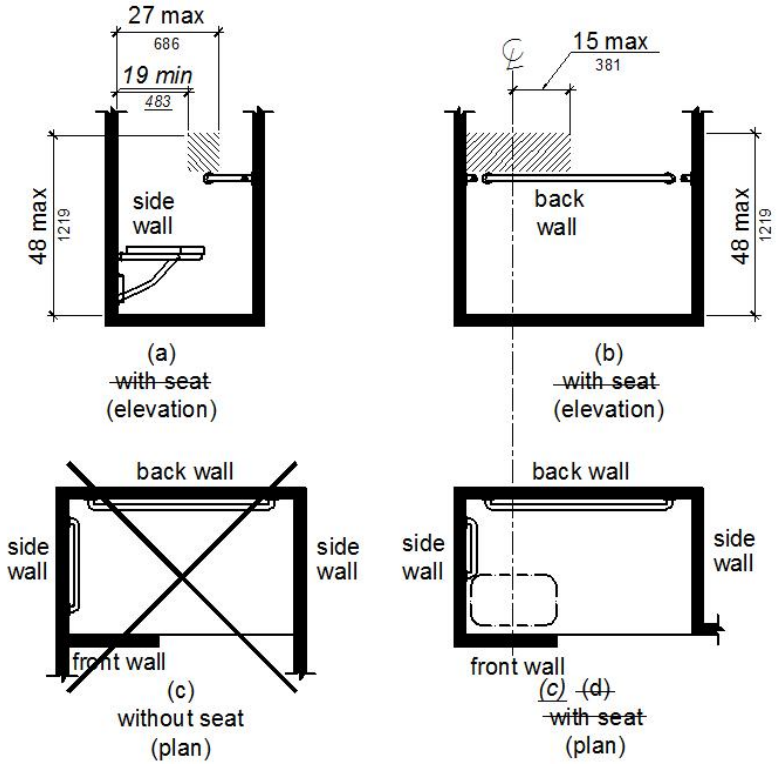

Figure *11B*-608.5.3
Alternate Roll-In Type Shower Compartment Control Location

***11B*-608.6 Shower Spray Unit and Water.** A shower spray unit with a hose 59 inches (~~1500~~ *1499* mm) long minimum that can be used both as a fixed-position shower head and as a hand-held shower shall be provided. The shower spray unit shall have an on/off control with a non-positive shut-off. If an adjustable-height shower head on a vertical bar is used, the bar shall be installed so as not to obstruct the use of grab bars. Shower spray units shall deliver water that is 120°F (49°C) maximum.

EXCEPTION: ~~A fixed shower head located at 48 inches (1220 mm) maximum above the shower finish floor shall be permitted instead of a hand-held spray unit in facilities that are not medical care facilities, long-term care facilities, transient lodging guest rooms, or residential dwelling units.~~ *Where subject to excessive vandalism, two fixed shower heads shall be installed instead of a hand-held spray unit in facilities that are not transient lodging guest rooms. Each shower head shall be installed so it can be operated independently of the other and shall have swivel angle adjustments, both vertically and horizontally.*

***11B*-608.7 Thresholds.** Thresholds in roll-in type shower compartments shall be ½ inch (~~13~~ *12.7* mm) high maximum in accordance with *11B*-303. ~~In transfer type shower compartments, thresholds ½ inch (13 mm) high maximum shall be beveled, rounded, or vertical.~~

EXCEPTION: ***Reserved.*** ~~A threshold 2 inches (51 mm) high maximum shall be permitted in transfer type shower compartments in existing facilities where provision of a ½ inch (13 mm) high threshold would disturb the structural reinforcement of the floor slab.~~

***11B*-608.8 Shower Enclosures.** Enclosures for shower compartments shall not obstruct controls, faucets, and shower spray units or obstruct transfer from wheelchairs onto shower seats.

11B-608.9 Shower Floor or Ground Surface. *Floor or ground surfaces of showers shall comply with 11B-302.1 and shall be sloped 1:48 maximum in any direction. Where drains are provided, grate openings shall be ¼ inch (6.4 mm) maximum and flush with the floor surface.*

11B-608.10 Soap Dish. *Where a soap dish is provided, it shall be located on the control wall at 40 inches (1016 mm) maximum above the shower floor, and within the reach limits from the seat.*

***11B-*609 Grab Bars**

***11B-*609.1 General.** Grab bars in toilet facilities and bathing facilities shall comply with *11B-*609.

***11B-*609.2 Cross Section.** Grab bars shall have a cross section complying with *11B-*609.2.1 or *11B-*609.2.2.

***11B-*609.2.1 Circular Cross Section.** Grab bars with circular cross sections shall have an outside diameter of 1¼ inches (32 mm) minimum and 2 inches (51 mm) maximum.

***11B-*609.2.2 Non-Circular Cross Section.** Grab bars with non-circular cross sections shall have a cross-section dimension of 2 inches (51 mm) maximum and a perimeter dimension of 4 inches (~~100~~ *102* mm) minimum and 4.8 inches (~~120~~ *122* mm) maximum.

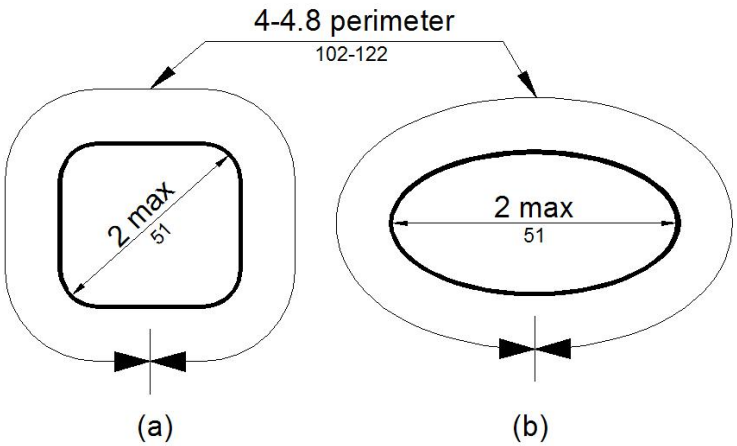

Figure *11B-*609.2.2
Grab Bar Non-Circular Cross Section

***11B-*609.3 Spacing.** The space between the wall and the grab bar shall be 1½ inches (38 mm). The space between the grab bar and projecting objects below and at the ends shall be 1½ inches (38 mm) minimum. The space between the grab bar and projecting objects above shall be 12 inches (305 mm) minimum.

~~**EXCEPTION:**~~ ***EXCEPTIONS:*** *1.* The space between the grab bars and shower controls, shower fittings, and other grab bars above shall be permitted to be 1½ inches (38 mm) minimum.

2. For L-shaped or U-shaped grab bars complying with 11B-609.9 the space between the walls and the grab bar shall be 1½ inches (38 mm) minimum for a distance of 6 inches on either side of the inside corner between two adjacent wall surfaces.

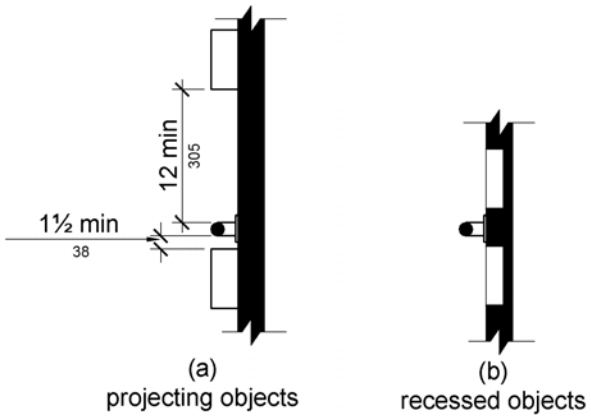

Figure *11B*-609.3
Spacing of Grab Bars

***11B*-609.4 Position of Grab Bars.** Grab bars shall be installed in a horizontal position, 33 inches (~~840~~ *838* mm) minimum and 36 inches (~~915~~ *914* mm) maximum above the finish floor measured to the top of the gripping surface, except that at water closets for children's use complying with *11B*-604.9, grab bars shall be installed in a horizontal position 18 inches (~~455~~ *457* mm) minimum and 27 inches (~~685~~ *686* mm) maximum above the finish floor measured to the top of the gripping surface. The height of the lower grab bar on the back wall of a bathtub shall comply with *11B*-607.4.1.1 or *11B*-607.4.2.1.

***11B*-609.5 Surface Hazards.** Grab bars and any wall or other surfaces adjacent to grab bars shall be free of sharp or abrasive elements and shall have rounded edges.

***11B*-609.6 Fittings.** Grab bars shall not rotate within their fittings.

***11B*-609.7 Installation.** Grab bars shall be installed in any manner that provides a gripping surface at the specified locations and that does not obstruct the required clear floor space.

***11B*-609.8 Structural Strength.** Allowable stresses shall not be exceeded for materials used when a vertical or horizontal force of 250 pounds (1112 N) is applied at any point on the grab bar, fastener, mounting device, or supporting structure.

11B-609.9 Alternate Configuration. *L-shaped or U-shaped grab bars shall be permitted.*

***11B*-610 Seats**

***11B*-610.1 General.** Seats in bathtubs and shower compartments shall comply with *11B*-610.

***11B*-610.2 Bathtub Seats.** The top of bathtub seats shall be 17 inches (~~430~~ *432* mm) minimum and 19 inches (~~485~~ *483* mm) maximum above the bathroom finish floor. The depth of a removable in-tub seat shall be 15 inches (~~380~~ *381* mm) minimum and 16 inches (~~405~~ *406* mm) maximum. The seat shall be capable of secure placement. Permanent seats at the head end of the bathtub shall be 15 inches (~~380~~ *381* mm) deep minimum and shall extend from the back wall to or beyond the outer edge of the bathtub.

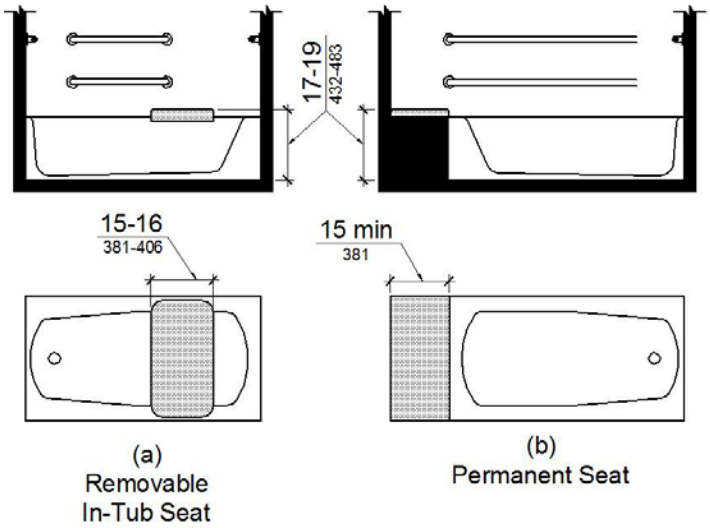

Figure *11B*-610.2
Bathtub Seats

***11B*-610.3 Shower Compartment Seats.** ~~Where a seat is provided~~ *A seat* in a standard roll-in shower compartment~~, it~~ shall be a folding type, shall be installed on the side wall adjacent to the controls, and shall extend from the back wall to a point within 3 inches (~~75~~ *76* mm) of the compartment entry. ~~Where a seat is provided~~ *A seat* in an alternate roll-in type shower compartment~~, it~~ shall be a folding type, shall be installed on the front wall opposite the back wall, and shall extend from the adjacent side wall to a point within 3 inches (~~75~~ *76* mm) of the compartment entry. ~~In transfer-type showers, the seat shall extend from the back wall to a point within 3 inches (75 mm) of the compartment entry.~~ The top of the seat shall be 17 inches (~~430~~ *432* mm) minimum and 19 inches (~~485~~ *483* mm) maximum above the bathroom finish floor. *When folded, the seat shall extend 6 inches (152 mm) maximum from the mounting wall.* Seats shall comply with *11B*-610.3.1 or *11B*-610.3.2.

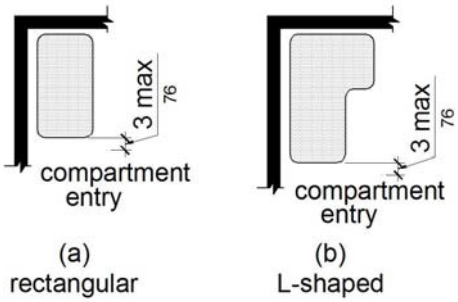

Figure *11B*-610.3
Extent of Seat

***11B*-610.3.1 Rectangular Seats.** The rear edge of a rectangular seat shall be 2½ inches (64 mm) maximum and the front edge 15 inches (~~380~~ *381* mm) minimum and 16 inches (~~405~~ *406* mm) maximum from the seat wall. The side edge of the seat shall be 1½ inches (38 mm) maximum from the adjacent wall.

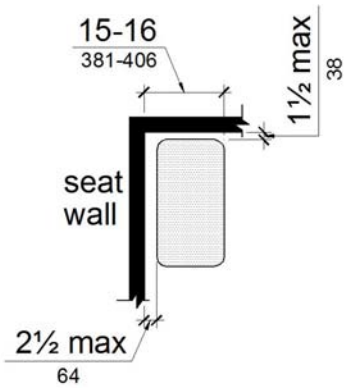

Figure *11B*-610.3.1
Rectangular Shower Seat

***11B*-610.3.2 L-Shaped Seats.** The rear edge of an L-shaped seat shall be 2½ inches (64 mm) maximum and the front edge 15 inches (~~380~~ *381* mm) minimum and 16 inches (~~405~~ *406* mm) maximum from the seat wall. The rear edge of the "L" portion of the seat shall be 1½ inches (38 mm) maximum from the wall and the front edge shall be 14 inches (~~355~~ *356* mm) minimum and 15 inches (~~380~~ *381* mm) maximum from the wall. The end of the "L" shall be 22 inches (~~560~~ *559* mm) minimum and 23 inches maximum (~~585~~ *584* mm) from the main seat wall.

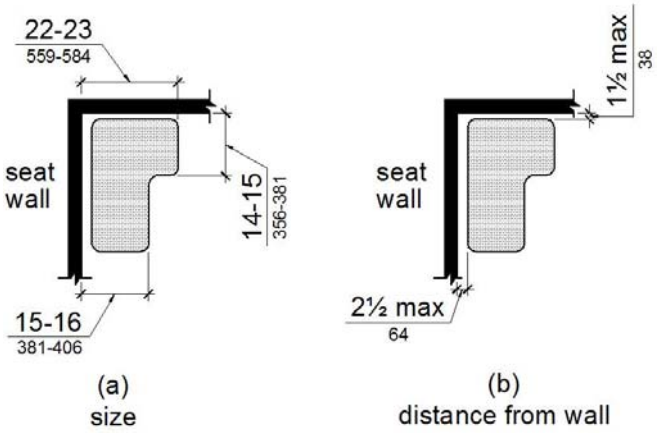

Figure *11B*-610.3.2
L-Shaped Shower Seat

***11B*-610.4 Structural Strength.** Allowable stresses shall not be exceeded for materials used when a vertical or horizontal force of 250 pounds (1112 N) is applied at any point on the seat, fastener, mounting device, or supporting structure.

***11B*-611 Washing Machines and Clothes Dryers**

***11B*-611.1 General.** Washing machines and clothes dryers shall comply with *11B*-611.

***11B*-611.2 Clear Floor Space.** A clear floor or ground space complying with *11B*-305 positioned for parallel approach shall be provided. The clear floor or ground space shall be centered on the appliance.

***11B*-611.3 Operable Parts.** Operable parts, including doors, lint screens, and detergent and bleach compartments shall comply with *11B*-309.

***11B*-611.4 Height.** Top loading machines shall have the door to the laundry compartment located 36 inches (~~915~~ *914* mm) maximum above the finish floor. Front loading machines shall have the bottom of the opening to the laundry compartment located 15 inches (~~380~~ *381* mm) minimum and 36 inches (~~915~~ *914* mm) maximum above the finish floor.

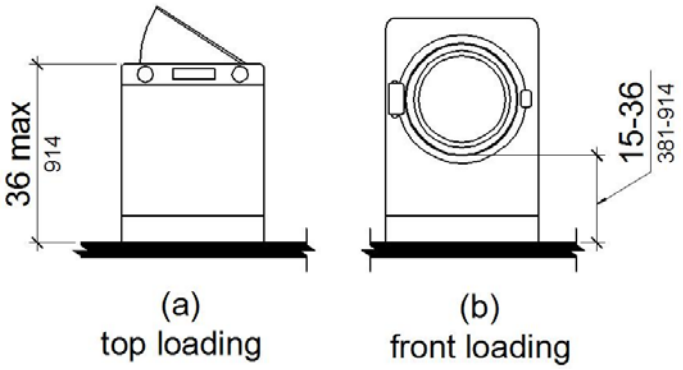

Figure *11B*-611.4
Height of Laundry Compartment Opening

***11B*-612 Saunas and Steam Rooms**

***11B*-612.1 General.** Saunas and steam rooms shall comply with *11B*-612.

***11B*-612.2 Bench.** Where seating is provided in saunas and steam rooms, at least one bench shall comply with *11B*-903. Doors shall not swing into the clear floor space required by *11B*-903.2.

> **EXCEPTION:** A readily removable bench shall be permitted to obstruct the turning space required by *11B*-612.3 and the clear floor or ground space required by *11B*-903.2.

***11B*-612.3 Turning Space.** A turning space complying with *11B*-304 shall be provided within saunas and steam rooms.

***11B-*701 General**

***11B-*701.1 Scope.** The provisions of ~~Chapter~~ *Division* 7 shall apply where required by ~~Chapter~~ *Division* 2 or where referenced by a requirement in this ~~document~~ *chapter*.

***11B-*702 Fire Alarm Systems**

***11B-*702.1 General.** Fire alarm systems shall have permanently installed audible and visible alarms complying with NFPA 72 ~~(1999 or 2002 edition) (incorporated by reference, see "Referenced Standards" in Chapter 1), except that the maximum allowable sound level of audible notification appliances complying with section 4-3.2.1 of NFPA 72 (1999 edition) shall have a sound level no more than 110 dB at the minimum hearing distance from the audible appliance. In addition, alarms in guest rooms required to provide communication features shall comply with sections 4-3 and 4-4 of NFPA 72 (1999 edition) or sections 7.4 and 7.5 of NFPA 72 (2002 edition).~~ *and Chapter 9, Sections 907.5.2.1 and 907.5.2.3.*

EXCEPTION: ***Reserved.*** ~~Fire alarm systems in medical care facilities shall be permitted to be provided in accordance with industry practice.~~

***11B-*703 Signs**

***11B-*703.1 General.** Signs shall comply with *11B-*703. Where both visual and tactile characters are required, either one sign with both visual and tactile characters, or two separate signs, one with visual, and one with tactile characters, shall be provided.

11B-703.1.1 Plan Review and Inspection. *Signs as specified in Section 11B-703, or in other sections of this code, when included in the construction of new buildings or facilities, or when included, altered or replaced due to additions, alterations or renovations to existing buildings or facilities, and when a permit is required, shall comply with 11B-703.1.1.1 and 11B-703.1.1.2.*

11B-703.1.1.1 Plan Review*. Plans, specifications or other information indicating compliance with these regulations shall be submitted to the enforcing agency for review and approval.*

11B-703.1.1.2 Inspection. *Signs and identification devices shall be field inspected after installation and approved by the enforcing agency prior to the issuance of a final certificate of occupancy per Chapter 1, Division II, Section 111, or final approval where no certificate of occupancy is issued. The inspection shall include, but not be limited to, verification that Braille dots and cells are properly spaced and the size, proportion and type of raised characters are in compliance with these regulations.*

***11B-*703.2 Raised Characters.** Raised characters shall comply with *11B-*703.2 and shall be duplicated in Braille complying with *11B-*703.3. Raised characters shall be installed in accordance with *11B-*703.4.

***11B-*703.2.1 Depth.** Raised characters shall be 1/32 inch (0.8 mm) minimum above their background.

***11B-*703.2.2 Case.** Characters shall be uppercase.

***11B-*703.2.3 Style.** Characters shall be sans serif. Characters shall not be italic, oblique, script, highly decorative, or of other unusual forms.

***11B-*703.2.4 Character Proportions**. Characters shall be selected from fonts where the width of the uppercase letter "O" is ~~55~~ *60* percent minimum and 110 percent maximum of the height of the uppercase letter "I".

***11B*-703.2.5 Character Height.** Character height measured vertically from the baseline of the character shall be 5/8 inch (~~16~~ *15.9* mm) minimum and 2 inches (51 mm) maximum based on the height of the uppercase letter "I".

EXCEPTION: ***Reserved.*** ~~Where separate raised and visual characters with the same information are provided, raised character height shall be permitted to be ½ inch (13 *12.7* mm) minimum.~~

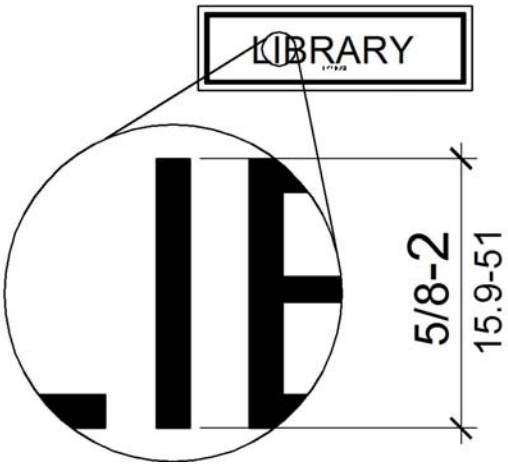

Figure *11B*-703.2.5
Height of Raised Characters

***11B*-703.2.6 Stroke Thickness.** Stroke thickness of the uppercase letter "I" shall be 15 percent maximum of the height of the character.

***11B*-703.2.7 Character Spacing.** Character spacing shall be measured between the two closest points of adjacent raised characters within a message, excluding word spaces. Where characters have rectangular cross sections, spacing between individual raised characters shall be 1/8 inch (3.2 mm) minimum and 4 times the raised character stroke width maximum. Where characters have other cross sections, spacing between individual raised characters shall be 1/16 inch (1.6 mm) minimum and 4 times the raised character stroke width maximum at the base of the cross sections, and 1/8 inch (3.2 mm) minimum and 4 times the raised character stroke width maximum at the top of the cross sections. Characters shall be separated from raised borders and decorative elements 3/8 inch (9.5 mm) minimum.

***11B*-703.2.8 Line Spacing.** Spacing between the baselines of separate lines of raised characters within a message shall be 135 percent minimum and 170 percent maximum of the raised character height.

11B-703.2.9 Format. *Text shall be in a horizontal format.*

***11B*-703.3 Braille.** Braille shall be contracted (Grade 2) and shall comply with *11B*-703.3 and *11B*-703.4.

***11B*-703.3.1 Dimensions and Capitalization.** Braille dots shall have a domed or rounded shape and shall comply with Table *11B*-703.3.1. The indication of an uppercase letter or letters shall only be used before the first word of sentences, proper nouns and names, individual letters of the alphabet, initials, and acronyms.

Table *11B*-703.3.1 Braille Dimensions

Measurement Range	Minimum in Inches Maximum in Inches
Dot base diameter	0.059 (1.5 mm) to 0.063 (1.6 mm)
Distance between two dots in the same cell[1]	~~0.090 (2.3 mm)~~ ~~to~~ 0.100 (2.5 mm)
Distance between corresponding dots in adjacent cells[1]	~~0.241 (6.1 mm)~~ ~~to~~ 0.300 (7.6 mm)
Dot height	0.025 (0.6 mm) to 0.037 (0.9 mm)
Distance between corresponding dots from one cell directly below[1]	0.395 (10 mm) to 0.400 (10.2 mm)
1. Measured center to center.	

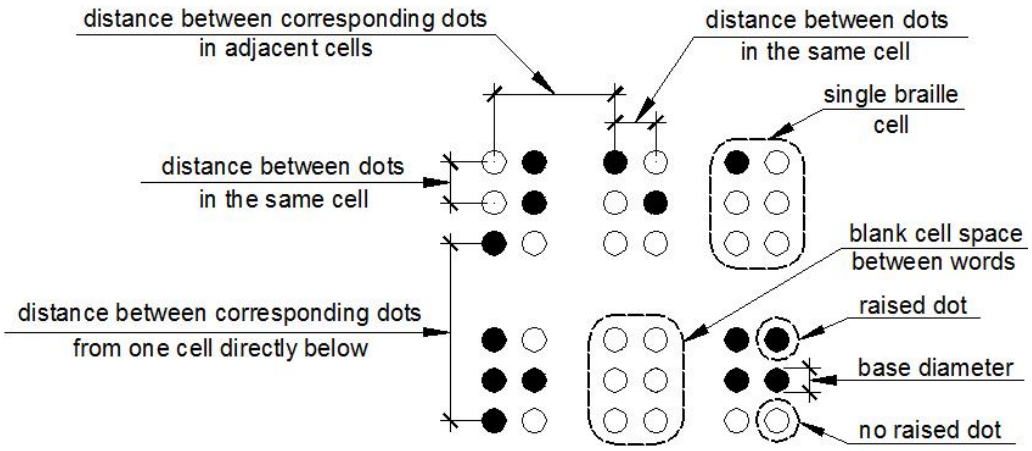

Figure *11B*-703.3.1
Braille Measurement

***11B*-703.3.2 Position.** Braille shall be positioned below the corresponding text *in a horizontal format, flush left or centered*. If text is multi-lined, Braille shall be placed below the entire text. Braille shall be separated 3/8 inch (9.5 mm) minimum *and $^1/_2$ inch (12.7 mm) maximum* from any other tactile characters and 3/8 inch (9.5 mm) minimum from raised borders and decorative elements.

EXCEPTION: Braille provided on elevator car controls shall be separated 3/16 inch (4.8 mm) minimum and shall be located ~~either~~ directly below ~~or adjacent to~~ the corresponding raised characters or symbols.

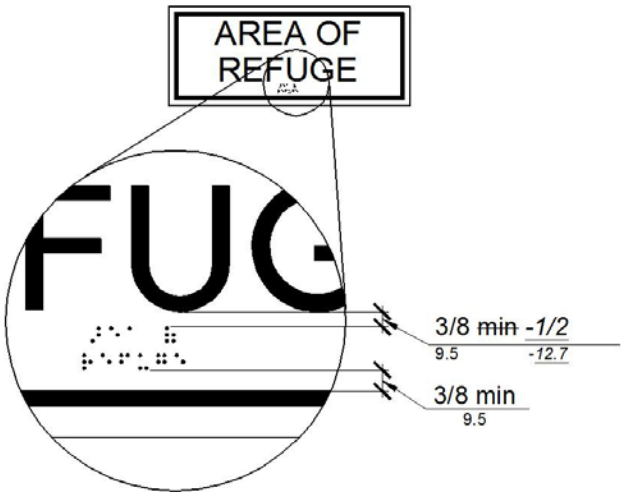

Figure *11B*-703.3.2
Position of Braille

***11B*-703.4 Installation Height and Location.** Signs with tactile characters shall comply with *11B*-703.4.

***11B*-703.4.1 Height Above Finish Floor or Ground.** Tactile characters on signs shall be located 48 inches (~~1220~~ *1219* mm) minimum above the finish floor or ground surface, measured from the baseline of the lowest ~~tactile character~~ *Braille cells* and 60 inches (~~1525~~ *1524* mm) maximum above the finish floor or ground surface, measured from the baseline of the highest ~~tactile character~~ *line of raised characters*.

EXCEPTION: Tactile characters for elevator car controls shall not be required to comply with *11B*-703.4.1.

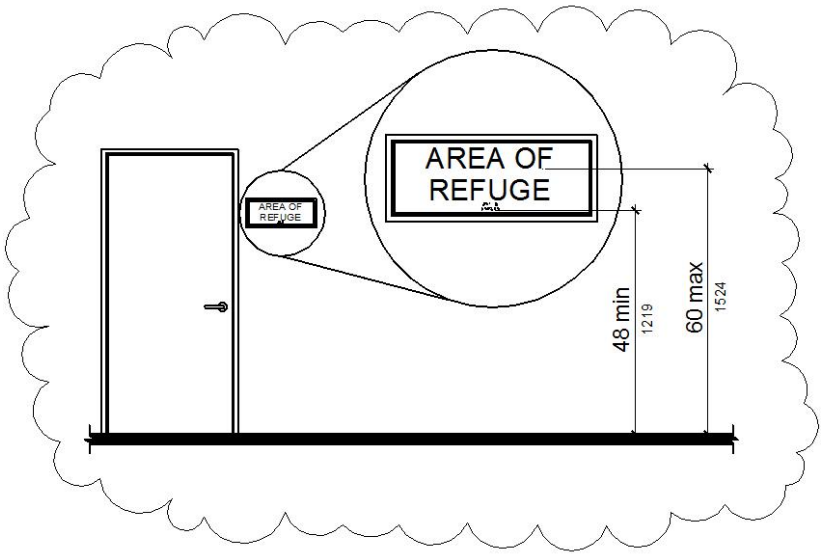

Figure *11B*-703.4.1
Height of Tactile Characters Above Finish Floor or Ground

***11B*-703.4.2 Location.** Where a tactile sign is provided at a door, the sign shall be located alongside the door at the latch side. Where a tactile sign is provided at double doors with one active leaf, the sign shall be located on the inactive leaf. Where a tactile sign is provided at double doors with two active leafs, the sign shall be located to the right of the right hand door. Where there is no wall space

at the latch side of a single door or at the right side of double doors, signs shall be located on the nearest adjacent wall. Signs containing tactile characters shall be located so that a clear floor space of 18 inches (~~455~~ *457* mm) minimum by 18 inches (~~455~~ *457* mm) minimum, centered on the tactile characters, is provided beyond the arc of any door swing between the closed position and 45 degree open position. *Where permanent identification signage is provided for rooms and spaces they shall be located on the approach side of the door as one enters the room or space. Signs that identify exits shall be located on the approach side of the door as one exits the room or space.*

EXCEPTION: ***Reserved.*** ~~Signs with tactile characters shall be permitted on the push side of doors with closers and without hold-open devices.~~

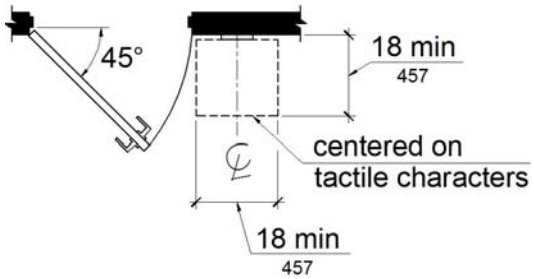

Figure *11B*-703.4.2
Location of Tactile Signs at Doors

***11B*-703.5 Visual Characters.** Visual characters shall comply with *11B*-703.5.

EXCEPTION: Where visual characters comply with *11B*-703.2 and are accompanied by Braille complying with *11B*-703.3, they shall not be required to comply with *11B*-703.5.2 through *11B-703.5.6, 11B-703.5.8 and 11B*-703.5.9.

***11B*-703.5.1 Finish and Contrast.** Characters and their background shall have a non-glare finish. Characters shall contrast with their background with either light characters on a dark background or dark characters on a light background.

***11B*-703.5.2 Case.** Characters shall be uppercase or lowercase or a combination of both.

***11B*-703.5.3 Style.** Characters shall be conventional in form. Characters shall not be italic, oblique, script, highly decorative, or of other unusual forms.

***11B*-703.5.4 Character Proportions.** Characters shall be selected from fonts where the width of the uppercase letter “O” is ~~55~~ *60* percent minimum and 110 percent maximum of the height of the uppercase letter “I”.

***11B*-703.5.5 Character Height.** Minimum character height shall comply with Table *11B*-703.5.5. Viewing distance shall be measured as the horizontal distance between the character and an obstruction preventing further approach towards the sign. Character height shall be based on the uppercase letter “I”.

EXCEPTION: *Where provided, floor plans providing emergency procedures information in accordance with Title 19 shall not be required to comply with 11B-703.5.5.*

Table *11B*-703.5.5 Visual Character Height

Height to Finish Floor or Ground From Baseline of Character	Horizontal Viewing Distance	Minimum Character Height
40 inches (~~1015~~ *1016* mm) to less than or equal to 70 inches (~~1780~~ *1778* mm)	less than 72 inches (~~1830~~ *1829* mm)	5/8 inch (~~16~~ *15.9* mm)
	72 inches (~~1830~~ *1829* mm) and greater	5/8 inch (~~16~~ *15.9* mm), plus 1/8 inch (3.2 mm) per foot (305 mm) of viewing distance above 72 inches (~~1830~~ *1829* mm)
Greater than 70 inches (~~1780~~ *1778* mm) to less than or equal to 120 inches (~~3050~~ *3048* mm)	less than 180 inches (~~4570~~ *4572* mm)	2 inches (51 mm)
	180 inches (~~4570~~ *4572* mm) and greater	2 inches (51 mm), plus 1/8 inch (3.2 mm) per foot (305 mm) of viewing distance above 180 inches (~~4570~~ *4572* mm)
greater than 120 inches (~~3050~~ *3048* mm)	less than 21 feet (~~6400~~ *6401* mm)	3 inches (~~75~~ *76* mm)
	21 feet (~~6400~~ *6401* mm) and greater	3 inches (~~75~~ *76* mm), plus 1/8 inch (3.2 mm) per foot (305 mm) of viewing distance above 21 feet (~~6400~~ *6401* mm)

***11B*-703.5.6 Height From Finish Floor or Ground.** Visual characters shall be 40 inches (~~1015~~ *1016* mm) minimum above the finish floor or ground.

~~**EXCEPTION:**~~ ***EXCEPTIONS: 1.*** Visual characters indicating elevator car controls shall not be required to comply with *11B*-703.5.6.

***2.** Floor-level exit signs complying with Chapter 10, Section 1011.7 shall not be required to comply with 11B-703.5.6.*

***3.** Where provided, floor plans providing emergency procedures information in accordance with Title 19 shall not be required to comply with 11B-703.5.6.*

***11B*-703.5.7 Stroke Thickness.** Stroke thickness of the uppercase letter "I" shall be 10 percent minimum and ~~30~~ *20* percent maximum of the height of the character.

***11B*-703.5.8 Character Spacing.** Character spacing shall be measured between the two closest points of adjacent characters, excluding word spaces. Spacing between individual characters shall be 10 percent minimum and 35 percent maximum of character height.

***11B*-703.5.9 Line Spacing.** Spacing between the baselines of separate lines of characters within a message shall be 135 percent minimum and 170 percent maximum of the character height.

***11B-703.5.10 Format.** Text shall be in a horizontal format.*

***11B*-703.6 Pictograms.** Pictograms shall comply with *11B*-703.6.

***11B*-703.6.1 Pictogram Field.** Pictograms shall have a field height of 6 inches (~~150~~ *152* mm) minimum. Characters and Braille shall not be located in the pictogram field.

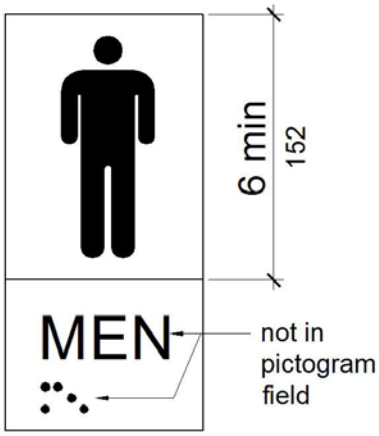

Figure *11B*-703.6.1
Pictogram Field

***11B*-703.6.2 Finish and Contrast.** Pictograms and their field shall have a non-glare finish. Pictograms shall contrast with their field with either a light pictogram on a dark field or a dark pictogram on a light field.

***11B*-703.6.3 Text Descriptors.** Pictograms shall have text descriptors located directly below the pictogram field. Text descriptors shall comply with *11B*-703.2, *11B*-703.3 and *11B*-703.4.

***11B*-703.7 Symbols of Accessibility.** Symbols of accessibility shall comply with *11B*-703.7.

***11B*-703.7.1 Finish and Contrast.** Symbols of accessibility and their background shall have a non-glare finish. Symbols of accessibility shall contrast with their background with either a light symbol on a dark background or a dark symbol on a light background.

***11B*-703.7.2 Symbols.**

***11B*-703.7.2.1 International Symbol of Accessibility.** The International Symbol of Accessibility shall comply with Figure *11B*-703.7.2.1. *The symbol shall consist of a white figure on a blue background. The blue shall be Color No. 15090 in Federal Standard 595B.*

***EXCEPTION:** The appropriate enforcement agency may approve other colors to complement décor or unique design. The symbol contrast shall be light on dark or dark on light.*

Figure *11B*-703.7.2.1
International Symbol of Accessibility

***11B*-703.7.2.2 International Symbol of TTY.** The International Symbol of TTY shall comply with Figure *11B*-703.7.2.2.

Figure *11B*-703.7.2.2
International Symbol of TTY

***11B*-703.7.2.3 Volume Control Telephones.** Telephones with a volume control shall be identified by a pictogram of a telephone handset with radiating sound waves on a square field such as shown in Figure *11B*-703.7.2.3.

Figure *11B*-703.7.2.3
Volume Control Telephone

***11B*-703.7.2.4 Assistive Listening Systems.** Assistive listening systems shall be identified by the International Symbol of Access for Hearing Loss complying with Figure *11B*-703.7.2.4.

Figure *11B*-703.7.2.4
International Symbol of Access for Hearing Loss

11B-703.7.2.5 Cleaner Air Symbol. *Rooms, facilities and paths of travel that are accessible to and usable by people who are adversely impacted by airborne chemicals or particulate(s) and/or the use of electrical fixtures and/or devices shall be identified by the Cleaner Air Symbol complying with Figure 11B-703.7.2.5. This symbol is to be used strictly for publicly funded facilities or any facilities leased or rented by state of California, not concessionaires.*

The symbol, which shall include the text "Cleaner Air" as shown, shall be displayed either as a negative or positive image within a square that is a minimum of 6 inches (152 mm) on each side. The symbol may be shown in black and white or in color. When color is used, it shall be Federal Blue (Color No. 15090 Federal Standard 595B) on white, or white on Federal Blue. There shall be at least a 70-percent color contrast between the background of the sign from the surface that it is mounted on.

Figure 11B-703.7.2.5
Cleaner Air Symbol

11B-703.7.2.6 Toilet and Bathing Facilities Geometric Symbols. *Doorways leading to toilet rooms and bathing rooms shall be identified by a geometric symbol complying with 11B-703.7.2.6. The symbol shall be mounted at 58 inches (1473 mm) minimum and 60 inches (1524 mm) maximum above the finish floor or ground surface measured from the centerline of the symbol. Where a door is provided the symbol shall be mounted within 1 inch (25 mm) of the vertical centerline of the door.*

EXCEPTION: *Geometric symbols shall not be required at inmate toilet rooms and bathing rooms in detention and correctional facilities where only one gender is housed.*

11B-703.7.2.6.1 Men's Toilet and Bathing Facilities. *Men's toilet and bathing facilities shall be identified by an equilateral triangle, ¼ inch (6.4 mm) thick with edges 12 inches (305 mm) long and a vertex pointing upward. The triangle symbol shall contrast with the door, either light on a dark background or dark on a light background.*

EXCEPTION: *Within secure perimeter of detention and correctional facilities, geometric symbols shall not be required to be ¼ inch (6.4 mm) thick.*

11B-703.7.2.6.2 Women's Toilet and Bathing Facilities. *Women's toilet and bathing facilities shall be identified by a circle, ¼ inch (6.4 mm) thick and 12 inches (305 mm) in diameter. The circle symbol shall contrast with the door, either light on a dark background or dark on a light background.*

EXCEPTION: *Within secure perimeter of detention and correctional facilities, geometric symbols shall not be required to be ¼ inch (6.4 mm) thick.*

11B-703.7.2.6.3 Unisex Toilet and Bathing Facilities. *Unisex toilet and bathing facilities shall be identified by a circle, ¼ inch (6.4 mm) thick and 12 inches (305 mm) in diameter with a ¼ inch (6.4 mm) thick triangle with a vertex pointing upward superimposed on the circle and within the 12-inch (305 mm) diameter. The triangle symbol shall contrast with the circle symbol, either light on a dark background or dark on a light background. The circle symbol shall contrast with the door, either light on a dark background or dark on a light background.*

EXCEPTION: *Within secure perimeter of detention and correctional facilities, geometric symbols shall not be required to be ¼ inch (6.4 mm) thick.*

11B-703.7.2.6.4 Edges and Corners. *Edges of signs shall be rounded, chamfered or eased. Corners of signs shall have a minimum radius of ⅛ inch (3.2 mm).*

11B-703.7.2.7 Pedestrian Traffic-Control Buttons. *Pole-supported pedestrian traffic-control buttons shall be identified with color coding consisting of a textured horizontal yellow band 2 inches (51 mm) in width encircling the pole, and a 1-inch-wide (25 mm) dark border band above and below this yellow*

band. Color coding shall be placed immediately above the control button. Control buttons shall be located no higher than 48 inches (1219 mm) above the ground surface adjacent to the pole.

***11B*-704 Telephones**

***11B*-704.1 General.** Public telephones shall comply with *11B*-704.

***11B*-704.2 Wheelchair Accessible Telephones.** Wheelchair accessible telephones shall comply with *11B*-704.2.

***11B*-704.2.1 Clear Floor or Ground Space.** A clear floor or ground space complying with *11B*-305 shall be provided. The clear floor or ground space shall not be obstructed by bases, enclosures, or seats.

***11B*-704.2.1.1 Parallel Approach.** Where a parallel approach is provided, the distance from the edge of the telephone enclosure to the face of the telephone unit shall be 10 inches (~~255~~ *254* mm) maximum.

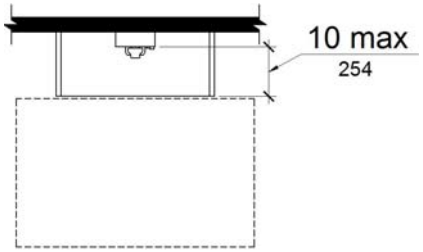

Figure *11B*-704.2.1.1
Parallel Approach to Telephone

***11B*-704.2.1.2 Forward Approach.** ~~Where a forward approach is provided, the distance from the front edge of a counter within the telephone enclosure to the face of the telephone unit shall be 20 inches (510 mm) maximum.~~ *Where a forward approach is provided at a telephone within an enclosure, the counter may extend beyond the face of the telephone 20 inches (508 mm) into the required clear floor or ground space and the enclosure may extend beyond the face of the telephone 24 inches (610 mm). If an additional 6 inches (152 mm) in width of clear floor space is provided, creating a clear floor space of 36 inches by 48 inches (914 mm by 1219 mm), the enclosure may extend more than 24 inches (610 mm) beyond the face of the telephone.*

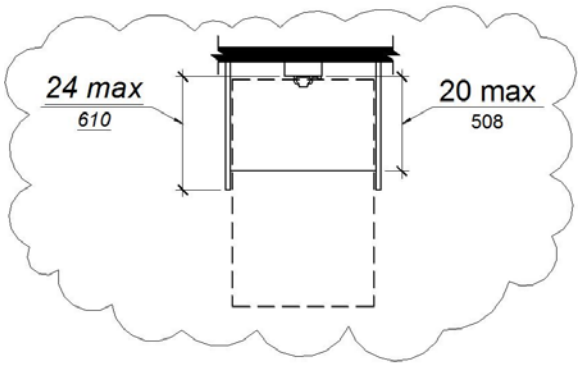

Figure *11B*-704.2.1.2
Forward Approach to Telephone

***11B*-704.2.2 Operable Parts.** Operable parts shall comply with *11B*-309. Telephones shall have push-button controls where such service is available.

***11B*-704.2.3 Telephone Directories.** Telephone directories, where provided, shall be located in accordance with *11B*-309.

***11B*-704.2.4 Cord Length.** The cord from the telephone to the handset shall be 29 inches (~~735~~ *737* mm) long minimum.

***11B*-704.3 Volume Control Telephones.** Public telephones required to have volume controls shall be equipped with a receive volume control that provides a gain adjustable up to 20 dB minimum. For incremental volume control, provide at least one intermediate step of 12 dB of gain minimum. An automatic reset shall be provided. *Volume control telephones shall be equipped with a receiver that generates a magnetic field in the area of the receiver cap. Public telephones with volume control shall be hearing aid compatible.*

***11B*-704.4 TTYs.** TTYs ~~required~~ *provided* at a public pay telephone shall be permanently affixed within, or adjacent to, the telephone enclosure. Where an acoustic coupler is used, the telephone cord shall be sufficiently long to allow connection of the TTY and the telephone receiver.

***11B*-704.4.1 Height.** When in use, the touch surface of TTY keypads shall be 34 inches (~~865~~ *864* mm) minimum above the finish floor.

EXCEPTION: Where seats are provided, TTYs shall not be required to comply with *11B*-704.4.1.

***11B*-704.5 TTY Shelf.** Public pay telephones required to accommodate portable TTYs shall be equipped with a shelf and an electrical outlet within or adjacent to the telephone enclosure. The telephone handset shall be capable of being placed flush on the surface of the shelf. The shelf shall be capable of accommodating a TTY and shall have 6 inches (~~150~~ *152* mm) minimum vertical clearance above the area where the TTY is to be placed.

11B*-705 Detectable Warnings *and Detectable Directional Texture.

11B-705.1 Detectable Warnings.

~~**705.1**~~ ***11B-705.1.1*** **General.** Detectable warnings shall consist of a surface of truncated domes and shall comply with *11B*-705.

~~**705.1.1**~~ ***11B-705.1.1.1*** **Dome Size.** Truncated domes in a detectable warning surface shall have a base diameter of 0.9 inch ~~(23 mm)~~ *(22.9 mm)* minimum and ~~1.4 inches (36 mm)~~ *0.92 inch (23.4 mm)* maximum, a top diameter of ~~50 percent of the base diameter minimum to 65 percent of the base diameter maximum~~ *0.45 inch (11.4 mm) minimum and 0.47 inch (11.9 mm) maximum*, and a height of ~~0.2 inch (5.1 mm)~~ *0.18 inch (4.6 mm) minimum and 0.22 inch (5.6 mm) maximum*.

~~**705.1.2**~~ ***11B-705.1.1.2*** **Dome Spacing.** Truncated domes in a detectable warning surface shall have a center-to-center spacing of ~~1.6 inches (41 mm)~~ *2.3 inches (58 mm)* minimum and 2.4 inches (61 mm) maximum, and a base-to-base spacing of 0.65 inch (~~17~~ *16.5* mm) minimum, measured between the most adjacent domes on a square grid.

***EXCEPTION:** Where installed in a radial pattern, truncated domes shall have a center-to-center spacing of 1.6 inches (41 mm) minimum to 2.4 inches (61 mm) maximum.*

Related code change – 11B-705.1.1.1 and 11B-705.1.1.2:
Part 12, Chapters 12-11A and 12-11B, Sections 12-11A.201 and 12-11B.201

~~DETECTABLE WARNINGS~~
~~Sections 12-11A.201 and 12-11B.201. "Nominal" means that premanufactured detectable warnings or devices used to create the detectable warning in place shall comply with required~~

~~dimensions within ± 0.020 inch for dome height, top diameter and bottom diameter and 0.050 inch for dome spacing.~~

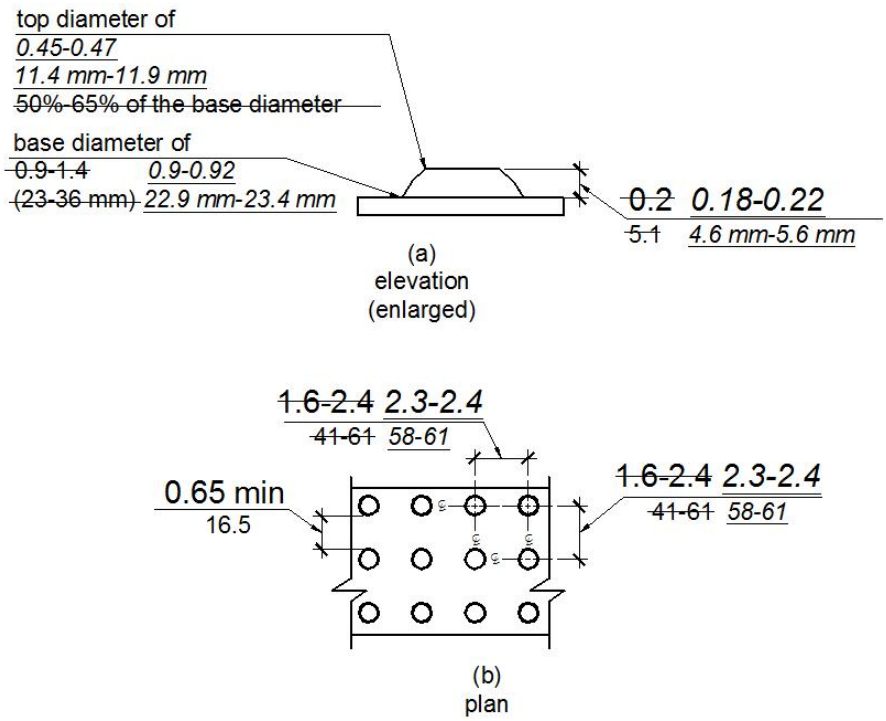

Figure *11B*-705.1
Size and Spacing of Truncated Domes

~~**705.1.3**~~ ***11B-705.1.1.3*** **Contrast.** Detectable warning surfaces shall contrast visually with adjacent walking surfaces either light-on-dark, or dark-on-light. *The material used to provide contrast shall be an integral part of the surface. Contrast shall be determined by:*

Contrast = [(B1-B2)/B1] x 100 percent where
B1 = light reflectance value (LRV) of the lighter area and
B2 = light reflectance value (LRV) of the darker area.

EXCEPTION: *Where the detectable warning surface does not adequately contrast with adjacent surfaces, a 1 inch (25 mm) wide black strip shall separate yellow detectable warning from adjacent surfaces.*

11B-705.1.1.4 Resiliency. *Detectable warning surfaces shall differ from adjoining surfaces in resiliency or sound-on-cane contact.*

EXCEPTION: *Detectable warning surfaces at curb ramps, islands or cut-through medians shall not be required to comply with 11B-705.1.1.4.*

11B-705.1.1.5 Color. *Detectable warning surfaces shall be yellow conforming to FS 33538 of Federal Standard 595C.*

EXCEPTION: *Detectable warning surfaces at curb ramps, islands or cut-through medians shall not be required to comply with 11B-705.1.1.5.*

~~**705.2**~~ ***11B-705.1.2 Locations.*** *Detectable warnings at the following locations shall comply with 11B-705.1.*

11B-705.1.2.1 **Platform Edges.** Detectable warning surfaces at platform boarding edges shall be 24 inches (610 mm) wide and shall extend the full length of the public use areas of the platform.

11B-705.1.2.2 Curb Ramps. *Detectable warnings at curb ramps shall extend 36 inches (914 mm) in the direction of travel. Detectable warnings shall extend the full width of the ramp run excluding any flared sides. Detectable warnings shall be located so the edge nearest the curb is 6 inches (152 mm) minimum and 8 inches (203 mm) maximum from the line at the face of the curb marking the transition between the curb and the gutter, street or highway.*

> ***EXCEPTION:*** *On parallel curb ramps, detectable warnings shall be placed on the turning space at the flush transition between the street and sidewalk.*

11B-705.1.2.3 Islands or Cut-through Medians. *Detectable warnings at pedestrian islands or cut-through medians shall be 36 inches (914 mm) minimum in depth extending the full width of the pedestrian path or cut-through, placed at the edges of the pedestrian island or cut-through median, and shall be separated by 24 inches (610 mm) minimum of walking surface without detectable warnings.*

> > ***EXCEPTION:*** *Detectable warnings shall be 24 inches (610 mm) minimum in depth at pedestrian islands or cut-through medians that are less than 96 inches (2438 mm) in length in the direction of pedestrian travel.*

11B-705.1.2.4 Bus Stops. *When detectable warnings are provided at bus stop pads, it shall be 36 inches (914 mm) in width.*

11B-705.1.2.5 Hazardous Vehicular Areas. *Detectable warnings at hazardous vehicular areas shall be 36 inches (914 mm) in width.*

11B-705.1.2.6 Reflecting Pools. *When detectable warnings are provided at reflecting pools, it shall be 24 inches (610 mm) minimum and 36 inches (914 mm) maximum in width.*

11B-705.1.2.7 Track Crossings. *Detectable warnings at track crossings shall be 36 inches (914 mm) in the direction of pedestrian travel and extend the full width of the circulation path.*

11B-705.2 Detectable Directional Texture. *Detectable directional texture at transit boarding platforms shall comply with Figure 11B-705.2 and shall be 0.1 inch (2.5 mm) in height that tapers off to 0.04 inch (1.0 mm), with bars raised 0.2 inch (5.1 mm) from the surface. The raised bars shall be 1.3 inches (33 mm) wide and 3 inches (76 mm) from center-to-center of each bar. This surface shall differ from adjoining walking surfaces in resiliency or sound-on-cane contact. The color shall be yellow conforming to Federal Color No. 33538. This surface will be placed directly behind the yellow detectable warning texture specified in 11B-705.1.2.1, aligning with all doors of the transit vehicles where passengers will embark. The width of the directional texture shall be equal to the width of the transit vehicle's door opening. The depth of the texture shall not be less than 36 inches (914 mm).*

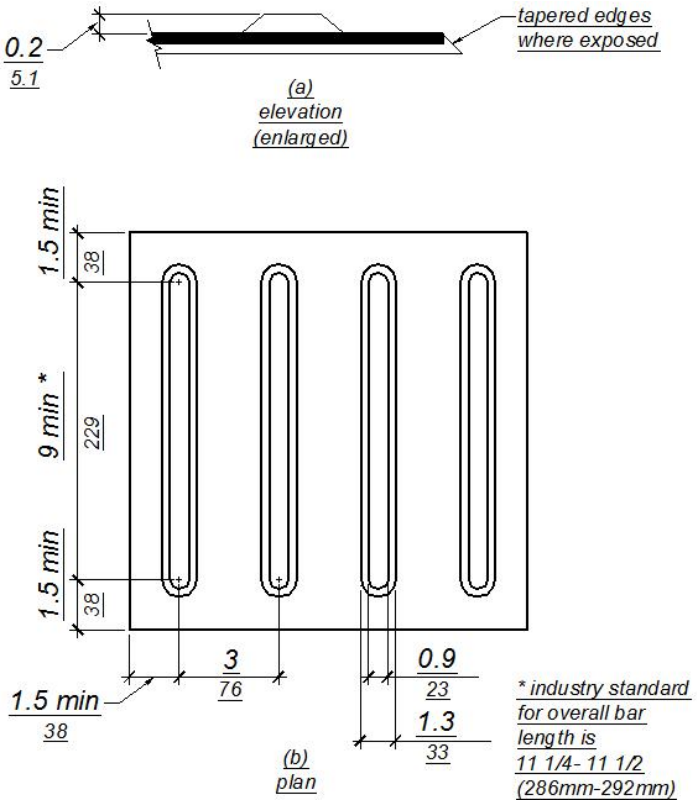

Figure 11B-705.2
Detectable Directional Texture

11B-705.3 Product Approval. *Only approved DSA-AC detectable warning products and directional surfaces shall be installed as provided in the California Code of Regulations (CCR), Title 24, Part 1, Chapter 5, Articles 2, 3 and 4. Refer to CCR Title 24, Part 12, Chapter 11B, Section 12-11B.205 for building and facility access specifications for product approval for detectable warning products and directional surfaces.*

***11B-*706 Assistive Listening Systems**

***11B-*706.1 General.** Assistive listening systems required in assembly areas*, conference and meeting rooms* shall comply with *11B-*706.

***11B-*706.2 Receiver Jacks.** Receivers required for use with an assistive listening system shall include a 1/8 inch (3.2 mm) standard mono jack.

***11B-*706.3 Receiver Hearing-Aid Compatibility.** Receivers required to be hearing-aid compatible shall interface with telecoils in hearing aids through the provision of neckloops.

***11B-*706.4 Sound Pressure Level.** Assistive listening systems shall be capable of providing a sound pressure level of 110 dB minimum and 118 dB maximum with a dynamic range on the volume control of 50 dB.

***11B-*706.5 Signal-to-Noise Ratio.** The signal-to-noise ratio for internally generated noise in assistive listening systems shall be 18 dB minimum.

***11B-*706.6 Peak Clipping Level.** Peak clipping shall not exceed 18 dB of clipping relative to the peaks of speech.

11B*-707 Automatic Teller Machines, ~~and~~ Fare Machines *and Point-of-Sale Devices

***11B*-707.1 General.** Automatic teller machines, ~~and~~ fare machines *and point-of-sale devices* shall comply with *11B*-707.

***11B*-707.2 Clear Floor or Ground Space.** A clear floor or ground space complying with *11B*-305 shall be provided.

EXCEPTION: Clear floor or ground space shall not be required at drive-up only automatic teller machines and fare machines.

***11B*-707.3 Operable Parts.** Operable parts shall comply with *11B*-309. Unless a clear or correct key is provided, each operable part shall be able to be differentiated by sound or touch, without activation.

EXCEPTION: Drive-up only automatic teller machines and fare machines shall not be required to comply with *11B*-309.2 and *11B*-309.3.

***11B*-707.4 Privacy.** Automatic teller machines shall provide the opportunity for the same degree of privacy of input and output available to all individuals.

***11B*-707.5 Speech Output.** Machines shall be speech enabled. Operating instructions and orientation, visible transaction prompts, user input verification, error messages, and all displayed information for full use shall be accessible to and independently usable by individuals with vision impairments. Speech shall be delivered through a mechanism that is readily available to all users, including but not limited to, an industry standard connector or a telephone handset. Speech shall be recorded or digitized human, or synthesized.

EXCEPTIONS: 1. Audible tones shall be permitted instead of speech for visible output that is not displayed for security purposes, including but not limited to, asterisks representing personal identification numbers.

2. Advertisements and other similar information shall not be required to be audible unless they convey information that can be used in the transaction being conducted.

3. Where speech synthesis cannot be supported, dynamic alphabetic output shall not be required to be audible.

***11B*-707.5.1 User Control.** Speech shall be capable of being repeated or interrupted. Volume control shall be provided for the speech function.

EXCEPTION: Speech output for any single function shall be permitted to be automatically interrupted when a transaction is selected.

***11B*-707.5.2 Receipts.** Where receipts are provided, speech output devices shall provide audible balance inquiry information, error messages, and all other information on the printed receipt necessary to complete or verify the transaction.

EXCEPTIONS: 1. Machine location, date and time of transaction, customer account number, and the machine identifier shall not be required to be audible.

2. Information on printed receipts that duplicates information available on-screen shall not be required to be presented in the form of an audible receipt.

3. Printed copies of bank statements and checks shall not be required to be audible.

***11B*-707.6 Input.** Input devices shall comply with *11B*-707.6.

***11B*-707.6.1 Input Controls.** At least one tactilely discernible input control shall be provided for each function. Where provided, key surfaces not on active areas of display screens, shall be raised above surrounding surfaces. Where membrane keys are the only method of input, each shall be tactilely discernible from surrounding surfaces and adjacent keys.

***11B*-707.6.2 Numeric Keys.** Numeric keys shall be arranged in a 12-key ascending or descending telephone keypad layout. The number five key shall be tactilely distinct from the other keys.

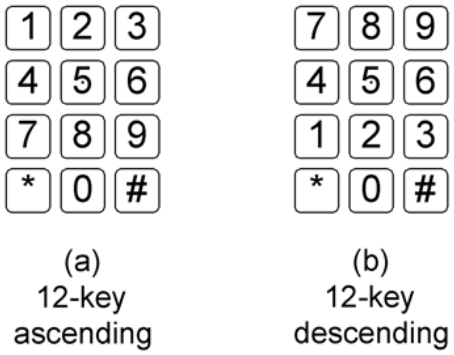

Figure *11B*-707.6.2
Numeric Key Layout

***11B*-707.6.3 Function Keys.** Function keys shall comply with *11B*-707.6.3.

***11B*-707.6.3.1 Contrast.** Function keys shall contrast visually from background surfaces. Characters and symbols on key surfaces shall contrast visually from key surfaces. Visual contrast shall be either light-on-dark or dark-on-light.

EXCEPTION: Tactile symbols required by *11B*-707.6.3.2 shall not be required to comply with *11B*-707.6.3.1.

***11B*-707.6.3.2 Tactile Symbols.** Function key surfaces shall have tactile symbols as follows: Enter or Proceed key: raised circle; Clear or Correct key: raised left arrow; Cancel key: raised letter ex; Add Value key: raised plus sign; Decrease Value key: raised minus sign.

***11B*-707.7 Display Screen.** The display screen shall comply with *11B*-707.7.

EXCEPTION: Drive-up only automatic teller machines and fare machines shall not be required to comply with *11B*-707.7.1.

***11B*-707.7.1 Visibility.** The display screen shall be visible from a point located 40 inches (~~1015~~ *1016* mm) above the center of the clear floor space in front of the machine.

11B.707.7.1.1 Vertically mounted display screen. *Where display screens are mounted vertically or no more than 30 degrees tipped away from the viewer, the center line of the display screen and other display devices shall be no more than 52 inches (1321 mm) above the floor or ground surface.*

11B.707.7.1.2 Angle-mounted display screen. *Where display screens are mounted between 30 degrees and 60 degrees tipped away from the viewer, the center line of the display screen and other display devices shall be no more than 44 inches (1118 mm) above the floor or ground surface.*

11B.707.7.1.3 Horizontally mounted display screen. *Where display screens are mounted no less than 60 degrees and no more than 90 degrees (horizontal) tipped away from the viewer, the center line of the display screen and other display devices shall be no more than 34 inches (864*

mm) above the floor or ground surface.

***11B-*707.7.2 Characters.** Characters displayed on the screen shall be in a sans serif font. Characters shall be 3/16 inch (4.8 mm) high minimum based on the uppercase letter "I". Characters shall contrast with their background with either light characters on a dark background or dark characters on a light background.

***11B-*707.8 Braille Instructions.** Braille instructions for initiating the speech mode shall be provided. Braille shall comply with *11B-*703.3.

11B-707.9 Point of Sale Devices. *Point of sale devices shall comply with 11B-707.9.*

11B-707.9.1 General. *Where point-of-sale devices are provided, all devices at each location shall comply with 11B-309.4, 11B-707.3, and 11B-707.7.2. In addition, point-of-sale systems that include a video touch screen or any other non-tactile keypad shall be equipped with either of the following:*

11B-707.9.1.1 Tactilely Discernible Numerical Keypad. *A tactilely discernible numerical keypad similar to a telephone keypad containing a raised dot with a dot base diameter between 1.5 mm and 1.6 mm and a height between 0.6 mm and 0.9 mm on the number 5 key that enables a visually impaired person to enter his or her own personal identification number or any other personal information necessary to process the transaction in a manner that provides the opportunity for the same degree of privacy input and output available to all individuals.*

11B-707.9.1.2 Other Technology. *Other technology, such as a radio frequency identification device, fingerprint biometrics, or some other mechanism that enables a visually impaired person to access the video touch screen device with his or her personal identifier and to process his or her transaction in a manner that provides the opportunity for the same degree of privacy input and output available to all individuals. Where a video screen overlay is provided it shall be equipped with a tactilely discernible numerical keypad complying with 11B-707.9.1.1.*

11B-707.9.2 Point-of-sale devices at check stands and sales or service counters. *Where point-of-sale devices are provided at check stands and sales or service counters, they shall comply with 11B-707.9.1, and shall also comply with 11B-707.2, 11B-707.3 and 11B-707.4.*

***11B-*708 Two-Way Communication Systems**

***11B-*708.1 General.** Two-way communication systems shall comply with *11B-*708.

***11B-*708.2 Audible and Visual Indicators.** The system shall provide both audible and visual signals.

***11B-*708.3 Handsets.** Handset cords, if provided, shall be 29 inches (~~735~~ *737* mm) long minimum.

***11B-*708.4 Residential Dwelling Unit Communication Systems.** Communications systems between a residential dwelling unit and a site, building, or floor entrance shall comply with *11B-*708.4.

***11B-*708.4.1 Common Use or Public Use System Interface.** The common use or public use system interface shall include the capability of supporting voice and TTY communication with the residential dwelling unit interface.

***11B-*708.4.2 Residential Dwelling Unit Interface.** The residential dwelling unit system interface shall include a telephone jack capable of supporting voice and TTY communication with the common use or public use system interface.

11B-801 General

***11B*-801.1 Scope.** The provisions of ~~Chapter~~ *Division* 8 shall apply where required by ~~Chapter~~ *Division* 2 or where referenced by a requirement in this ~~document~~ *chapter*.

11B-802 Wheelchair Spaces, Companion Seats, ~~and~~ Designated Aisle Seats *and Semi-Ambulant Seats*

***11B*-802.1 Wheelchair Spaces.** Wheelchair spaces shall comply with *11B*-802.1.

***11B*-802.1.1 Floor or Ground Surface.** The floor or ground surface of wheelchair spaces shall comply with *11B*-302. Changes in level are not permitted.

EXCEPTION: Slopes not steeper than 1:48 shall be permitted.

***11B*-802.1.2 Width.** A single wheelchair space shall be 36 inches (~~915~~ *914* mm) wide minimum. Where two adjacent wheelchair spaces are provided, each wheelchair space shall be 33 inches (~~840~~ *838* mm) wide minimum.

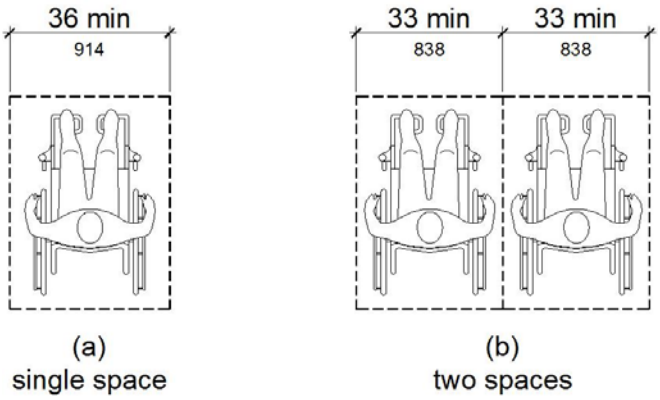

Figure *11B*-802.1.2
Width of Wheelchair Spaces

***11B*-802.1.3 Depth.** Where a wheelchair space can be entered from the front or rear, the wheelchair space shall be 48 inches (~~1220~~ *1219* mm) deep minimum. Where a wheelchair space can be entered only from the side, the wheelchair space shall be 60 inches (~~1525~~ *1524* mm) deep minimum.

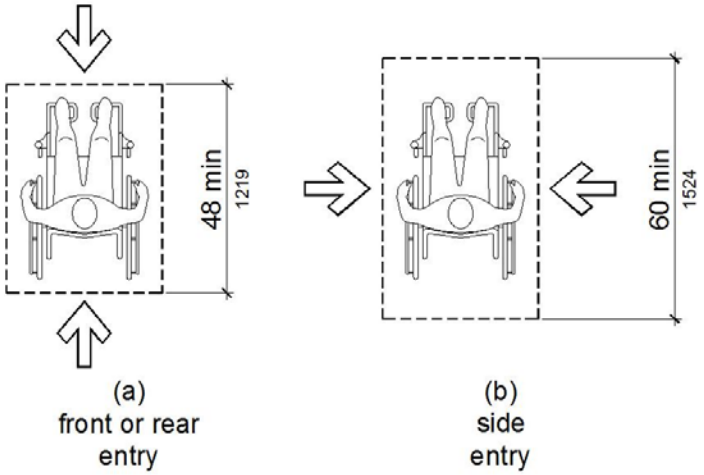

Figure *11B*-802.1.3
Depth of Wheelchair Spaces

***11B*-802.1.4 Approach.** Wheelchair spaces shall adjoin accessible routes. Accessible routes shall not overlap wheelchair spaces.

***11B*-802.1.5 Overlap.** Wheelchair spaces shall not overlap circulation paths.

***11B*-802.2 Lines of Sight.** Lines of sight to the screen, performance area, or playing field for spectators in wheelchair spaces shall comply with *11B*-802.2.

***11B*-802.2.1 Lines of Sight Over Seated Spectators.** Where spectators are expected to remain seated during events, spectators in wheelchair spaces shall be afforded lines of sight complying with *11B*-802.2.1.

***11B*-802.2.1.1 Lines of Sight Over Heads.** Where spectators are provided lines of sight over the heads of spectators seated in the first row in front of their seats, spectators seated in wheelchair spaces shall be afforded lines of sight over the heads of seated spectators in the first row in front of wheelchair spaces.

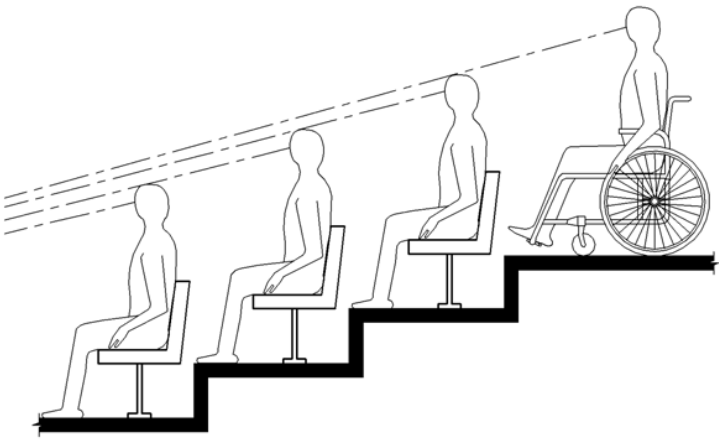

Figure *11B*-802.2.1.1
Lines of Sight Over the Heads of Seated Spectators

***11B*-802.2.1.2 Lines of Sight Between Heads.** Where spectators are provided lines of sight over the shoulders and between the heads of spectators seated in the first row in front of their seats,

spectators seated in wheelchair spaces shall be afforded lines of sight over the shoulders and between the heads of seated spectators in the first row in front of wheelchair spaces.

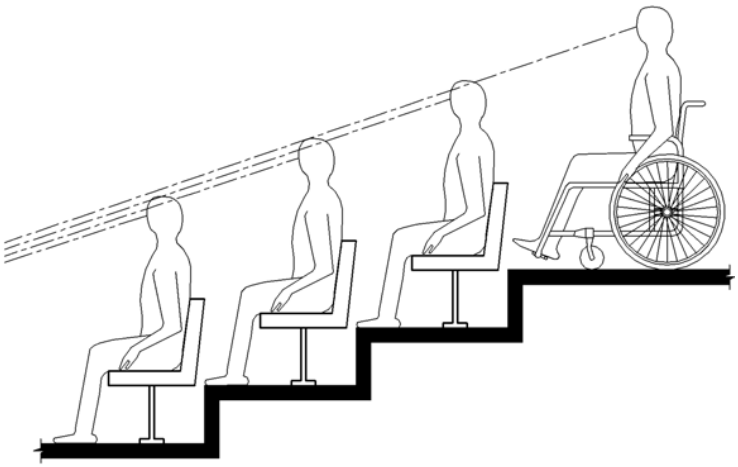

Figure *11B*-802.2.1.2
Lines of Sight Between the Heads of Seated Spectators

***11B*-802.2.2 Lines of Sight Over Standing Spectators.** Where spectators are expected to stand during events, spectators in wheelchair spaces shall be afforded lines of sight complying with *11B*-802.2.2.

***11B*-802.2.2.1 Lines of Sight Over Heads.** Where standing spectators are provided lines of sight over the heads of spectators standing in the first row in front of their seats, spectators seated in wheelchair spaces shall be afforded lines of sight over the heads of standing spectators in the first row in front of wheelchair spaces.

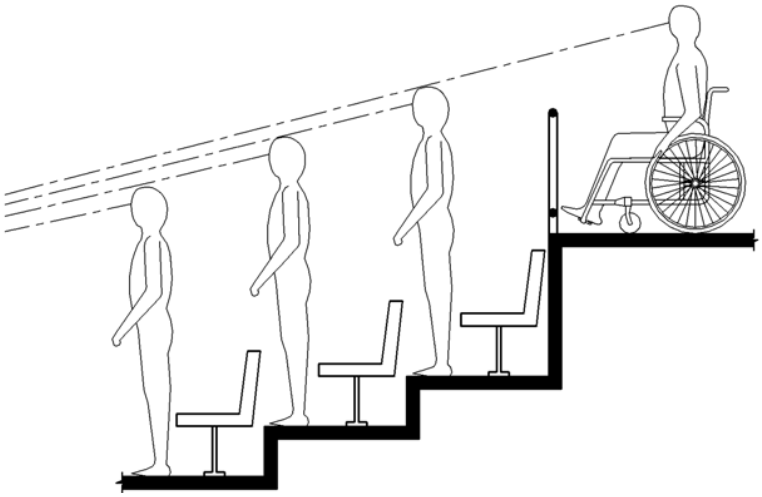

Figure *11B*-802.2.2.1
Lines of Sight Over the Heads of Standing Spectators

***11B*-802.2.2.2 Lines of Sight Between Heads.** Where standing spectators are provided lines of sight over the shoulders and between the heads of spectators standing in the first row in front of their seats, spectators seated in wheelchair spaces shall be afforded lines of sight over the shoulders and between the heads of standing spectators in the first row in front of wheelchair spaces.

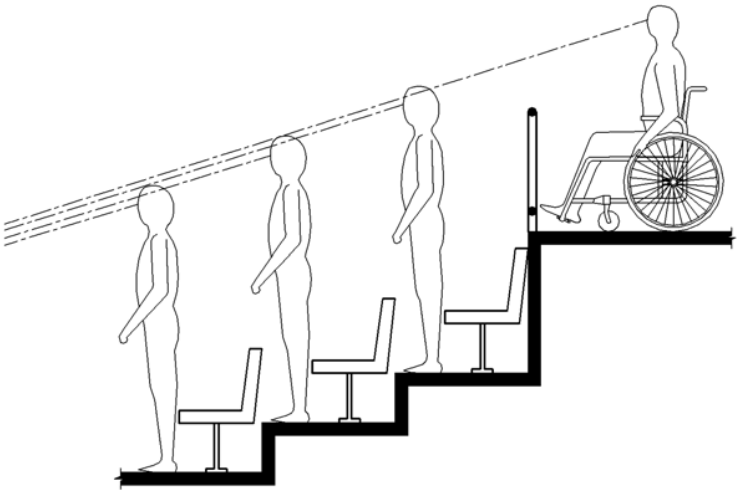

Figure *11B*-802.2.2.2
Lines of Sight Between the Heads of Standing Spectators

***11B*-802.3 Companion Seats.** Companion seats shall comply with *11B*-802.3.

***11B*-802.3.1 Alignment.** In row seating, companion seats shall be located to provide shoulder alignment with adjacent wheelchair spaces. The shoulder alignment point of the wheelchair space shall be measured 36 inches (~~915~~ *914* mm) from the front of the wheelchair space. The floor surface of the companion seat shall be at the same elevation as the floor surface of the wheelchair space.

***11B*-802.3.2 Type.** Companion seats shall be equivalent in size, quality, comfort, and amenities to the seating in the immediate area. Companion seats shall be permitted to be movable.

***11B*-802.4 Designated Aisle Seats.** Designated aisle seats shall comply with *11B*-802.4.

***11B*-802.4.1 Armrests.** Where armrests are provided on the seating in the immediate area, folding or retractable armrests shall be provided on the aisle side of the seat.

***11B*-802.4.2 Identification.** Each designated aisle seat shall be identified by a sign or marker *with the International Symbol of Accessibility complying with 11B-703.7.2.1. Signage complying with 11B-703.5, notifying patrons of the availability of such seats shall be posted at the ticket office.*

11B-802.5 Semi-Ambulant Seats. *Semi-ambulant seats shall provide at least 24 inches (610 mm) clear leg space between the front of the seat to the nearest obstruction or to the back of the seat immediately in front.*

***11B*-803 Dressing, Fitting, and Locker Rooms**

***11B*-803.1 General.** Dressing, fitting, and locker rooms shall comply with *11B*-803.

***11B*-803.2 Turning Space.** Turning space complying with *11B*-304 shall be provided within the room.

***11B*-803.3 Door Swing.** Doors shall not swing into the room unless a ~~clear floor or ground~~ *turning* space complying with ~~305.3~~ *11B-304.3* is provided beyond the arc of the door swing.

***11B*-803.4 Benches.** A bench complying with *11B*-903 shall be provided within the room.

***11B*-803.5 Coat Hooks and Shelves.** Coat hooks provided within the room shall be located within one of the reach ranges specified in *11B*-308. Shelves shall be 40 inches (~~1015~~ *1016* mm) minimum and 48

inches (~~1220~~ *1219* mm) maximum above the finish floor or ground. *Coat hooks shall not be located above the bench or other seating in the room.*

11B-803.6 Mirrors. *Mirrors shall be installed with the bottom edge of the reflecting surface 20 inches (508 mm) maximum above the finish floor or ground. Mirrors shall be full length with a reflective surface 18 inches (457 mm) wide minimum by 54 inches (1372 mm) high minimum and shall be mounted in a position affording a view to a person on the bench as well as to a person in a standing position.*

***11B*-804 Kitchens and Kitchenettes**

***11B*-804.1 General.** Kitchens and kitchenettes shall comply with *11B*-804.

***11B*-804.2 Clearance.** Where a pass through kitchen is provided, clearances shall comply with *11B*-804.2.1. Where a U-shaped kitchen is provided, clearances shall comply with *11B*-804.2.2.

EXCEPTION: Spaces that do not provide a cooktop or conventional range shall not be required to comply with *11B*-804.2.

***11B*-804.2.1 Pass Through Kitchen.** In pass through kitchens where counters, appliances or cabinets are on two opposing sides, or where counters, appliances or cabinets are opposite a parallel wall, clearance between all opposing base cabinets, counter tops, appliances, or walls within kitchen work areas shall be 40 inches (~~1015~~ *1016* mm) minimum. Pass through kitchens shall have two entries.

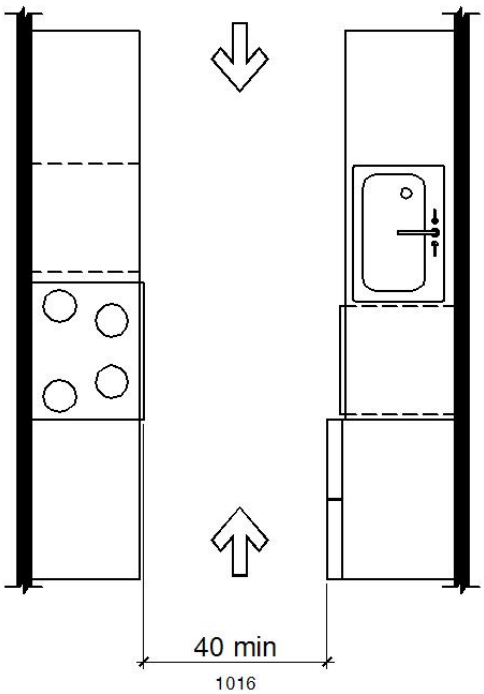

Figure *11B*-804.2.1
Pass Through Kitchens

***11B*-804.2.2 U-Shaped.** In U-shaped kitchens enclosed on three contiguous sides, clearance between all opposing base cabinets, counter tops, appliances, or walls within kitchen work areas shall be 60 inches (~~1525~~ *1524* mm) minimum.

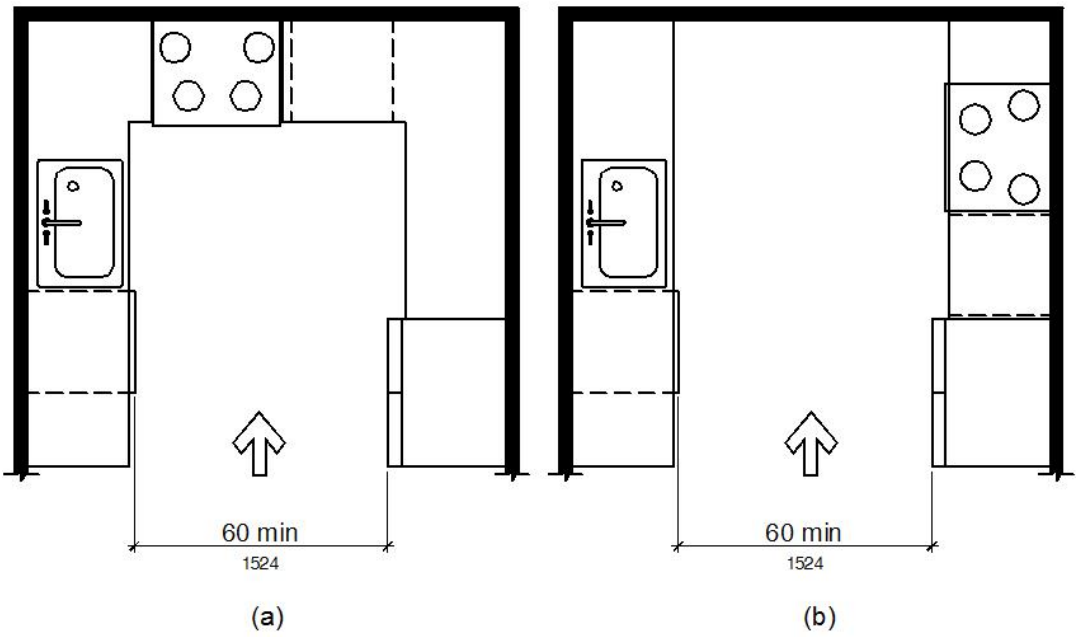

Figure *11B*-804.2.2
U-Shaped Kitchens

***11B*-804.3 Kitchen Work Surface.** In residential dwelling units required to comply with *11B*-809, at least one 30 inches (~~760~~ *762* mm) wide minimum section of counter shall provide a kitchen work surface that complies with *11B*-804.3.

***11B*-804.3.1 Clear Floor or Ground Space.** A clear floor space complying with *11B*-305 positioned for a forward approach shall be provided. The clear floor or ground space shall be centered on the kitchen work surface and shall provide knee and toe clearance complying with *11B*-306.

EXCEPTION: Cabinetry shall be permitted under the kitchen work surface provided that all of the following conditions are met:

(a) the cabinetry can be removed without removal or replacement of the kitchen work surface;

(b) the finish floor extends under the cabinetry; and

(c) the walls behind and surrounding the cabinetry are finished.

***11B*-804.3.2 Height.** The kitchen work surface shall be 34 inches (~~865~~ *864* mm) maximum above the finish floor or ground.

EXCEPTION: A counter that is adjustable to provide a kitchen work surface at variable heights, 29 inches (~~735~~ *737* mm) minimum and 36 inches (~~915~~ *914* mm) maximum, shall be permitted.

***11B*-804.3.3 Exposed Surfaces.** There shall be no sharp or abrasive surfaces under the work surface counters.

***11B*-804.4 Sinks.** Sinks shall comply with *11B*-606.

***11B*-804.5 Storage.** At least 50 percent of shelf space in storage facilities shall comply with *11B*-811.

***11B*-804.6 Appliances.** Where provided, kitchen appliances shall comply with *11B*-804.6.

***11B*-804.6.1 Clear Floor or Ground Space.** A clear floor or ground space complying with *11B*-305 shall be provided at each kitchen appliance. Clear floor or ground spaces shall be permitted to overlap.

***11B*-804.6.2 Operable Parts.** All appliance controls shall comply with *11B*-309.

EXCEPTIONS: 1. Appliance doors and door latching devices shall not be required to comply with *11B*-309.4.

2. Bottom-hinged appliance doors, when in the open position, shall not be required to comply with *11B*-309.3.

***11B*-804.6.3 Dishwasher.** Clear floor or ground space shall be positioned adjacent to the dishwasher door. The dishwasher door, in the open position, shall not obstruct the clear floor or ground space for the dishwasher or the sink.

***11B*-804.6.4 Range or Cooktop.** Where a forward approach is provided, the clear floor or ground space shall provide knee and toe clearance complying with *11B*-306. Where knee and toe space is provided, the underside of the range or cooktop shall be insulated or otherwise configured to prevent burns, abrasions, or electrical shock. The location of controls shall not require reaching across burners.

***11B*-804.6.5 Oven.** Ovens shall comply with *11B*-804.6.5.

***11B*-804.6.5.1 Side-Hinged Door Ovens.** Side-hinged door ovens shall have the work surface required by *11B*-804.3 positioned adjacent to the latch side of the oven door.

***11B*-804.6.5.2 Bottom-Hinged Door Ovens.** Bottom-hinged door ovens shall have the work surface required by *11B*-804.3 positioned adjacent to one side of the door.

***11B*-804.6.5.3 Controls.** Ovens shall have controls on front panels.

***11B*-804.6.6 Refrigerator/Freezer.** Combination refrigerators and freezers shall have at least 50 percent of the freezer space 54 inches (~~1370~~ *1372* mm) maximum above the finish floor or ground. The clear floor or ground space shall be positioned for a parallel approach to the space dedicated to a refrigerator/freezer with the centerline of the clear floor or ground space offset 24 inches (610 mm) maximum from the centerline of the dedicated space.

11B-805 Medical Care and Long-Term Care Facilities

~~**805.1 General.** Medical care facility and long-term care facility patient or resident sleeping rooms required to provide mobility features shall comply with 805.~~

~~**805.2 Turning Space.** Turning space complying with 304 shall be provided within the room.~~

~~**805.3 Clear Floor or Ground Space.** A clear floor space complying with 305 shall be provided on each side of the bed. The clear floor space shall be positioned for parallel approach to the side of the bed.~~

~~**805.4 Toilet and Bathing Rooms.** Toilet and bathing rooms that are provided as part of a patient or resident sleeping room shall comply with 603. Where provided, no fewer than one water closet, one lavatory, and one bathtub or shower shall comply with the applicable requirements of 603 through 610.~~

11B-805.1 General. *Medical care facilities and long-term care facilities shall comply with 11B-805. All common use spaces and public use spaces in medical care facilities and long-term care facilities shall comply with this chapter.*

11B-805.2 Patient Bedrooms and Resident Sleeping Rooms. *Patient bedrooms and resident sleeping rooms required to provide mobility features shall comply with 11B-805.2.*

11B-805.2.1 Hand Washing Fixtures. *Hand washing fixtures shall comply with 11B-606.*

11B-805.2.2 Beds. *A 36 inch (914 mm) minimum wide clear space shall be provided along the full length of each side of the beds.*

11B-805.2.3 Turning Space. *Turning space complying with 11B-304 shall be provided within the room.*

11B-805.2.4 Toilet and Bathing Rooms. *Toilet and bathing rooms that are provided as part of patient bedrooms and resident sleeping rooms complying with 11B-223.2 or 11B-223.3 shall comply with 11B-603. Where provided, one water closet, one lavatory, and one bathtub or shower shall comply with the applicable requirements of 11B-603 through 11B-610.*

11B-805.3 Waiting Rooms. *Waiting rooms shall comply with 11B-805.3.*

11B-805.3.1 Wheelchair Spaces. *Where seating is provided in waiting rooms, at least 5 percent of the seating shall be wheelchair spaces complying with 11B-802.1.*

EXCEPTION: *In waiting rooms serving facilities specializing in treating conditions that affect mobility, 10 percent of the seating shall be wheelchair spaces complying with 11B-802.1.*

11B-805.4 Examination, Diagnostic and Treatment Rooms. *Examination, diagnostic and treatment rooms shall comply with 11B-805.4.*

11B-805.4.1 Beds, Exam Tables, Procedure Tables, Gurneys and Lounge Chairs. *A 36 inch (914 mm) minimum wide clear space shall be provided along the full length of each side of beds, exam tables, procedure tables, gurneys and lounge chairs.*

EXCEPTION: *General exam rooms in non-emergency settings may provide clear space on only one side of beds, gurneys and exam tables.*

11B-805.4.2 Equipment. *Clear space complying with 11B-305.2 shall be provided as required for specific equipment.*

11B-805.4.3 Turning Space. *Turning space complying with 11B-304 shall be provided within the room.*

11B-805.5 Patient Change Areas. *Areas where patients change or are prepared for a procedure shall comply with 11B-222.*

11B-805.6 Hand Washing Fixtures, Lavatories and Sinks. *All hand washing fixtures, lavatories and sinks shall comply with 11B-606.*

EXCEPTION: *Scrub sinks, as defined in California Plumbing Code Section 221.0, shall not be required to comply with 11B-606.*

11B-805.7 Built-in Cabinets and Work Surfaces. *Built-in cabinets, counters and work surfaces shall be accessible, including: patient wardrobes, nurse's stations, administrative centers, reception desks, medicine preparation areas, laboratory work stations, equipment consoles, clean and soiled utility cabinets, and storage areas; and shall comply with 11B-225 and 11B-902.*

EXCEPTIONS: 1. *Built-in wardrobes in patient bedrooms and resident sleeping rooms not required to be accessible are not required to comply with the provisions of this chapter.*

2. *Clinical laboratory work stations provided in a laboratory area that are in addition to the minimum number required to be accessible (5 percent of the work stations provided, but no fewer than one), are not required to comply with the provisions of 11B-902.*

***11B-*806 Transient Lodging Guest Rooms**

***11B-*806.1 General.** Transient lodging guest rooms shall comply with *11B-*806. Guest rooms required to provide mobility features shall comply with *11B-*806.2. Guest rooms required to provide communication features shall comply with *11B-*806.3.

***11B-*806.2 Guest Rooms with Mobility Features.** Guest rooms required to provide mobility features shall comply with *11B-*806.2.

***11B-*806.2.1 Living and Dining Areas.** Living and dining areas shall be accessible.

***11B-*806.2.2 Exterior Spaces.** Exterior spaces, including patios, terraces and balconies, that serve the guest room shall be accessible.

***11B-*806.2.3 Sleeping Areas.** At least one sleeping area shall provide a *36 inch (914 mm) by 48 inch (1219 mm) minimum* clear ~~floor~~ space ~~complying with 305~~ on both sides of a bed. The clear ~~floor~~ space shall be positioned for parallel approach to the side of the bed.

EXCEPTION: Where a single clear floor space complying with *11B-*305 positioned for parallel approach is provided between two beds, a clear floor or ground space shall not be required on both sides of a bed.

11B-806.2.3.1 Personal Lift Device Floor Space. *There shall be a clear space under the bed for the use of a personal lift device. The clear space shall extend under the bed parallel to the long side and be adjacent to an accessible route. The clear space shall extend to points horizontally 30 inches (762 mm), vertically 7 inches (178 mm) and not more than 12 inches (305 mm) from the head and foot end of the bed.*

***11B-*806.2.4 Toilet and Bathing Facilities.** At least one bathroom that is provided as part of a guest room shall comply with *11B-*603. No fewer than one water closet, one lavatory, and one bathtub or shower shall comply with applicable requirements of *11B-*603 through *11B-*610. In addition, required roll-in shower compartments shall comply with *11B-*608.2.2 or *11B-*608.2.3. Toilet and bathing fixtures required to comply with *11B-*603 through *11B-*610 shall be permitted to be located in more than one toilet or bathing area, provided that travel between fixtures does not require travel between other parts of the guest room.

***11B-*806.2.4.1 Vanity Counter Top Space.** If vanity counter top space is provided in non-accessible guest toilet or bathing rooms, comparable vanity counter top space, in terms of size and proximity to the lavatory, shall also be provided in accessible guest toilet or bathing rooms.

***11B-*806.2.5 Kitchens, ~~and~~ Kitchenettes *and Wet Bars*.** Kitchens, ~~and~~ kitchenettes *and wet bars* shall comply with *11B-*804.

***11B-*806.2.6 Turning Space.** Turning space complying with *11B-*304 shall be provided within the guest room.

***11B-*806.3 Guest Rooms with Communication Features.** Guest rooms required to provide communication features shall comply with *11B-*806.3.

***11B-*806.3.1 Alarms.** Where emergency warning systems are provided, alarms complying with *11B-*702 shall be provided.

***11B*-806.3.2 Notification Devices.** Visible notification devices shall be provided to alert room occupants of incoming telephone calls and a door knock or bell. Notification devices shall not be connected to visible alarm signal appliances. Telephones shall have volume controls compatible with the telephone system and shall comply with *11B*-704.3. Telephones shall be served by an electrical outlet complying with *11B*-309 located within 48 inches (~~1220~~ *1219* mm) of the telephone to facilitate the use of a TTY.

***11B*-807 Holding Cells and Housing Cells**

***11B*-807.1 General.** Holding cells and housing cells shall comply with *11B*-807.

***11B*-807.2 Cells with Mobility Features.** Cells required to provide mobility features shall comply with *11B*-807.2.

***11B*-807.2.1 Turning Space.** Turning space complying with *11B*-304 shall be provided within the cell.

***11B*-807.2.2 Benches.** Where benches are provided, at least one bench shall comply with *11B*-903.

***11B*-807.2.3 Beds.** Where beds are provided, clear floor space complying with *11B*-305 shall be provided on at least one side of the bed. The clear floor space shall be positioned for parallel approach to the side of the bed.

***11B*-807.2.4 Toilet and Bathing Facilities.** Toilet facilities or bathing facilities that are provided as part of a cell shall comply with *11B*-603. Where provided, no fewer than one water closet, one lavatory, and one bathtub or shower shall comply with the applicable requirements of *11B*-603 through *11B*-610.

***11B*-807.3 Cells with Communication Features.** Cells required to provide communication features shall comply with *11B*-807.3.

***11B*-807.3.1 Alarms.** Where audible emergency alarm systems are provided to serve the occupants of cells, visible alarms complying with *11B*-702 shall be provided.

EXCEPTION: Visible alarms shall not be required where inmates or detainees are not allowed independent means of egress.

***11B*-807.3.2 Telephones.** Telephones, where provided within cells, shall have volume controls complying with *11B*-704.3.

***11B*-808 Courtrooms**

***11B*-808.1 General.** Courtrooms shall comply with *11B*-808.

***11B*-808.2 Turning Space.** Where provided, areas that are raised or depressed and accessed by ramps or platform lifts with entry ramps shall provide unobstructed turning space complying with *11B*-304.

***11B*-808.3 Clear Floor Space.** Each jury box and witness stand shall have, within its defined area, clear floor space complying with *11B*-305.

EXCEPTION: In alterations, wheelchair spaces are not required to be located within the defined area of raised jury boxes or witness stands and shall be permitted to be located outside these spaces where ramp or platform lift access poses a hazard by restricting or projecting into a means of egress required by the appropriate administrative authority.

***11B*-808.4 Judges' Benches and Courtroom Stations.** Judges' benches, clerks' stations, bailiffs' stations, deputy clerks' stations, court reporters' stations and litigants' and counsel stations shall comply with *11B*-902.

***11B*-809 Residential Dwelling Units**

***11B*-809.1 General.** *When located within public housing facilities, residential* ~~Residential~~ dwelling units shall comply with *11B*-809. Residential dwelling units required to provide mobility features shall comply with *11B*-809.2 through *11B*-809.4. Residential dwelling units required to provide communication features shall comply with *11B*-809.5.

***11B*-809.2 Accessible Routes.** Accessible routes complying with ~~Chapter~~ *Division* 4 shall be provided within residential dwelling units in accordance with *11B*-809.2.

EXCEPTION: Accessible routes shall not be required to or within unfinished attics or unfinished basements.

***11B*-809.2.1 Location.** At least one accessible route shall connect all spaces and elements which are a part of the residential dwelling unit. Where only one accessible route is provided, it shall not pass through bathrooms, closets, or similar spaces.

***11B*-809.2.2 Turning Space.** All rooms served by an accessible route shall provide a turning space complying with *11B*-304.

EXCEPTION: Turning space shall not be required in exterior spaces 30 inches (~~760~~ *762* mm) maximum in depth or width.

***11B*-809.3 Kitchen.** Where a kitchen is provided, it shall comply with *11B*-804.

***11B*-809.4 Toilet Facilities and Bathing Facilities.** At least one bathroom shall comply with *11B*-603. No fewer than one of each type of fixture provided *within the bathroom* shall comply with applicable requirements of *11B*-603 through *11B*-610. Toilet and bathing fixtures required to comply with *11B*-603 through *11B*-610 shall be located in the same *bathroom or* toilet and bathing area, such that travel between fixtures does not require travel between other parts of the residential dwelling unit.

***11B-809.4.1 Subsequent Bathrooms.** In residential dwelling units with more than one bathroom, when a bathtub is installed in the first bathroom in compliance with 11B-809.4 and a shower compartment is provided in a subsequent bathroom, at least one shower compartment shall comply with 11B-608.*

***11B*-809.5 Residential Dwelling Units with Communication Features.** Residential dwelling units required to provide communication features shall comply with *11B*-809.5.

***11B*-809.5.1 Building Fire Alarm System.** Where a building fire alarm system is provided, the system wiring shall be extended to a point within the residential dwelling unit in the vicinity of the residential dwelling unit smoke detection system.

***11B*-809.5.1.1 Alarm Appliances.** Where alarm appliances are provided within a residential dwelling unit as part of the building fire alarm system, they shall comply with ~~702~~ *Chapter 9, Section 907.5.2.3.4*.

***11B*-809.5.1.2 Activation.** All visible alarm appliances provided within the residential dwelling unit for building fire alarm notification shall be activated upon activation of the building fire alarm in the portion of the building containing the residential dwelling unit.

***11B*-809.5.2 Residential Dwelling Unit Smoke Detection System.** Residential dwelling unit smoke detection systems shall comply with ~~NFPA 72 (1999 or 2002 edition) (incorporated by reference, see "Referenced Standards" in Chapter 1)~~ *Chapter 9, Section 907.2.11*.

***11B*-809.5.2.1 Activation.** All visible alarm appliances provided within the residential dwelling unit for smoke detection notification shall be activated upon smoke detection.

***11B*-809.5.3 Interconnection.** The same visible alarm appliances shall be permitted to provide notification of residential dwelling unit smoke detection and building fire alarm activation.

***11B*-809.5.4 Prohibited Use.** Visible alarm appliances used to indicate residential dwelling unit smoke detection or building fire alarm activation shall not be used for any other purpose within the residential dwelling unit.

***11B*-809.5.5 Residential Dwelling Unit Primary Entrance.** Communication features shall be provided at the residential dwelling unit primary entrance complying with *11B*-809.5.5.

***11B*-809.5.5.1 Notification.** A hard-wired electric doorbell shall be provided. A button or switch shall be provided outside the residential dwelling unit primary entrance. Activation of the button or switch shall initiate an audible tone and visible signal within the residential dwelling unit. Where visible doorbell signals are located in sleeping areas, they shall have controls to deactivate the signal.

***11B*-809.5.5.2 Identification.** A means for visually identifying a visitor without opening the residential dwelling unit entry door shall be provided and shall allow for a minimum 180 degree range of view.

***11B*-809.5.6 Site, Building, or Floor Entrance.** Where a system, including a closed-circuit system, permitting voice communication between a visitor and the occupant of the residential dwelling unit is provided, the system shall comply with *11B*-708.4.

***11B*-810 Transportation Facilities**

***11B*-810.1 General.** Transportation facilities shall comply with *11B*-810.

11B-810.1.1 Vehicle Boarding. *Stations shall not be designed or constructed so as to require persons with disabilities to board or alight from a vehicle at a location other than one used by the general public.*

11B-810.1.2 Baggage Systems. *Baggage check-in and retrieval systems shall be on an accessible route complying with 11B-402 and shall have space immediately adjacent complying with 11B-302.*

***11B*-810.2 Bus Boarding and Alighting Areas.** Bus boarding and alighting areas shall comply with *11B*-810.2.

***11B*-810.2.1 Surface.** Bus stop boarding and alighting areas shall have a firm, stable surface.

***11B*-810.2.2 Dimensions.** Bus stop boarding and alighting areas shall provide a clear length of 96 inches (~~2440~~ *2438* mm) minimum, measured perpendicular to the curb or vehicle roadway edge, and a clear width of 60 inches (~~1525~~ *1524* mm) minimum, measured parallel to the vehicle roadway.

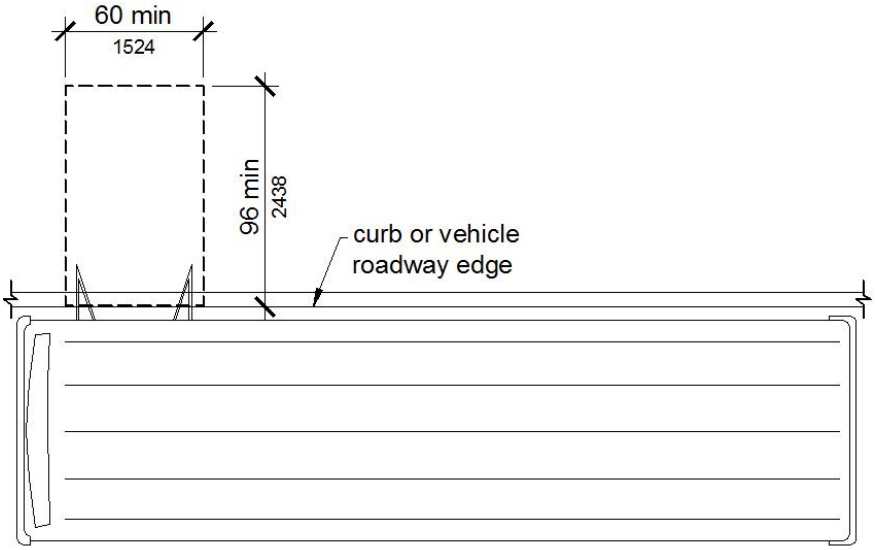

Figure *11B*-810.2.2
Dimensions of Bus Boarding and Alighting Areas

***11B*-810.2.3 Connection.** Bus stop boarding and alighting areas shall be connected to streets, sidewalks, or pedestrian paths by an accessible route complying with *11B*-402. *Newly constructed bus stop pads shall provide a square curb transition between the pad and roadway elevations or detectable warnings complying with 11B-705.2.*

***11B*-810.2.4 Slope.** Parallel to the roadway, the slope of the bus stop boarding and alighting area shall be the same as the roadway, to the maximum extent practicable. Perpendicular to the roadway, the slope of the bus stop boarding and alighting area shall not be steeper than 1:48.

***11B*-810.3 Bus Shelters.** Bus shelters shall provide a minimum clear floor or ground space complying with *11B*-305 entirely within the shelter. Bus shelters shall be connected by an accessible route complying with *11B*-402 to a boarding and alighting area complying with *11B*-810.2.

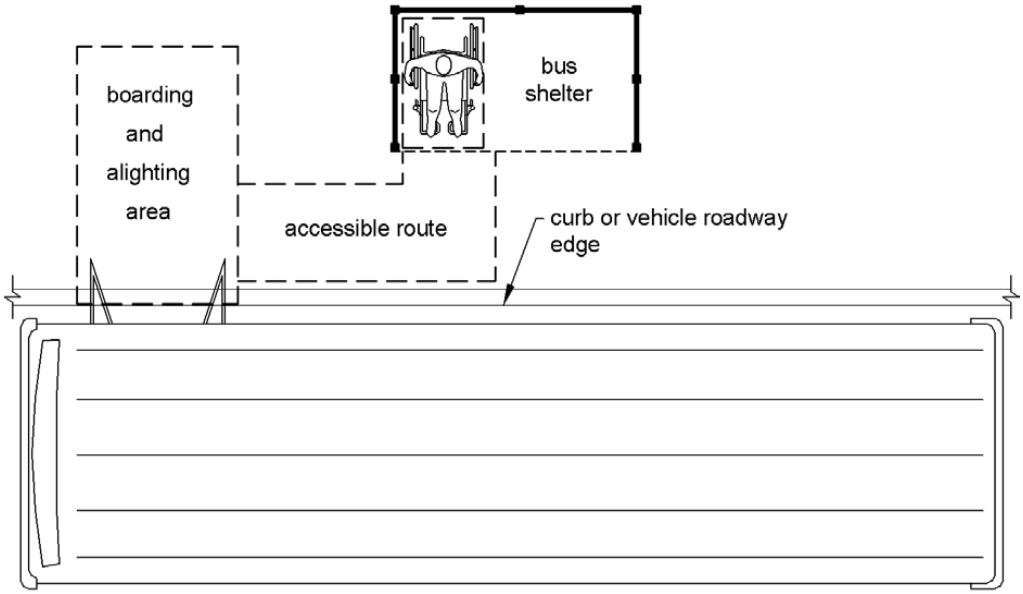

Figure *11B*-810.3
Bus Shelters

***11B*-810.4 Bus Signs.** Bus route identification signs shall comply with *11B*-703.5.1 through *11B*-703.5.4, and *11B*-703.5.7 and *11B*-703.5.8. In addition, to the maximum extent practicable, bus route identification signs shall comply with *11B*-703.5.5.

EXCEPTION: Bus schedules, timetables and maps that are posted at the bus stop or bus bay shall not be required to comply.

***11B*-810.5 Rail Platforms.** Rail platforms shall comply with *11B*-810.5.

***11B*-810.5.1 Slope.** Rail platforms shall not exceed a slope of 1:48 in all directions.

EXCEPTION: Where platforms serve vehicles operating on existing track or track laid in existing roadway, the slope of the platform parallel to the track shall be permitted to be equal to the slope (grade) of the roadway or existing track.

***11B*-810.5.2 Detectable Warnings.** Platform boarding edges not protected by platform screens or guards shall have detectable warnings complying with *11B*-705 along the full length of the public use area of the platform.

***11B*-810.5.3 Platform and Vehicle Floor Coordination.** Station platforms shall be positioned to coordinate with vehicles in accordance with the applicable requirements of 36 CFR Part 1192. Low-level platforms shall be 8 inches (~~205~~ *203* mm) minimum above top of rail.

EXCEPTION: Where vehicles are boarded from sidewalks or street-level, low-level platforms shall be permitted to be less than 8 inches (~~205~~ *203* mm).

***11B*-810.6 Rail Station Signs.** Rail station signs shall comply with *11B*-810.6.

EXCEPTION. Signs shall not be required to comply with *11B*-810.6.1 and *11B*-810.6.2 where audible signs are remotely transmitted to hand-held receivers, or are user- or proximity-actuated.

***11B*-810.6.1 Entrances.** Where signs identify a station or its entrance, at least one sign at each entrance shall comply with *11B*-703.2 and shall be placed in uniform locations to the maximum extent practicable. Where signs identify a station that has no defined entrance, at least one sign shall comply with *11B*-703.2 and shall be placed in a central location.

***11B*-810.6.2 Routes and Destinations.** Lists of stations, routes and destinations served by the station which are located on boarding areas, platforms, or mezzanines shall comply with *11B*-703.5. At least one tactile sign identifying the specific station and complying with *11B*-703.2 shall be provided on each platform or boarding area. Signs covered by this requirement shall, to the maximum extent practicable, be placed in uniform locations within the system.

EXCEPTION: Where sign space is limited, characters shall not be required to exceed 3 inches (~~75~~ *76* mm).

***11B*-810.6.3 Station Names**. Stations covered by this section shall have identification signs complying with *11B*-703.5. Signs shall be clearly visible and within the sight lines of standing and sitting passengers from within the vehicle on both sides when not obstructed by another vehicle.

***11B*-810.7 Public Address Systems.** Where public address systems convey audible information to the public, the same or equivalent information shall be provided in a visual format.

***11B*-810.8 Clocks.** Where clocks are provided for use by the public, the clock face shall be uncluttered so that its elements are clearly visible. Hands, numerals and digits shall contrast with the background either light-on-dark or dark-on-light. Where clocks are installed overhead, numerals and digits shall comply with *11B*-703.5.

***11B*-810.9 Escalators.** Where provided, escalators shall comply with the sections 6.1.3.5.6 and 6.1.3.6.5 of ASME A17.1 ~~(incorporated by reference, see "Referenced Standards" in Chapter 1)~~ and shall have a clear width of 32 inches (~~815~~ *813* mm) minimum.

EXCEPTION: Existing escalators in key stations shall not be required to comply with *11B*-810.9.

***11B*-810.10 Track Crossings.** Where a circulation path serving boarding platforms crosses tracks, it shall comply with *11B*-402.

EXCEPTION: Openings for wheel flanges shall be permitted to be 2½ inches (64 mm) maximum.

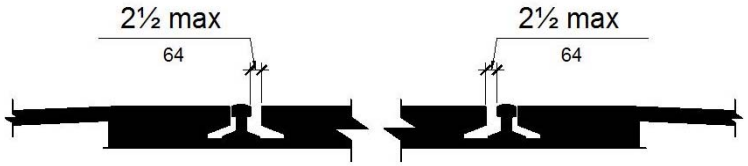

Figure *11B*-810.10 (Exception)
Track Crossings

***11B*-811 Storage**

***11B*-811.1 General.** Storage shall comply with *11B*-811.

***11B*-811.2 Clear Floor or Ground Space.** A clear floor or ground space complying with *11B*-305 shall be provided.

***11B*-811.3 Height.** Storage elements shall comply with at least one of the reach ranges specified in *11B*-308.

***11B*-811.4 Operable Parts.** Operable parts shall comply with *11B*-309.

***11B*-901 General**

***11B*-901.1 Scope.** The provisions of ~~Chapter~~ *Division* 9 shall apply where required by ~~Chapter~~ *Division* 2 or where referenced by a requirement in this ~~document~~ *chapter*.

***11B*-902 Dining Surfaces and Work Surfaces**

***11B*-902.1 General.** Dining surfaces and work surfaces shall comply with *11B*-902.2 and *11B*-902.3.

EXCEPTION: Dining surfaces and work surfaces for children's use shall be permitted to comply with *11B*-902.4.

***11B*-902.2 Clear Floor or Ground Space.** A clear floor space complying with *11B*-305 positioned for a forward approach shall be provided. Knee and toe clearance complying with *11B*-306 shall be provided.

***11B*-902.3 Height.** The tops of dining surfaces and work surfaces shall be 28 inches (~~710~~ *711* mm) minimum and 34 inches (~~865~~ *864* mm) maximum above the finish floor or ground.

***11B*-902.4 Dining Surfaces and Work Surfaces for Children's Use.** Accessible dining surfaces and work surfaces for children's use shall comply with *11B*-902.4.

EXCEPTION: Dining surfaces and work surfaces that are used primarily by children 5 years and younger shall not be required to comply with *11B*-902.4 where a clear floor or ground space complying with *11B*-305 positioned for a parallel approach is provided.

***11B*-902.4.1 Clear Floor or Ground Space.** A clear floor space complying with *11B*-305 positioned for forward approach shall be provided. Knee and toe clearance complying with *11B*-306 shall be provided, except that knee clearance 24 inches (610 mm) minimum above the finish floor or ground shall be permitted.

***11B*-902.4.2 Height.** The tops of tables and counters shall be 26 inches (660 mm) minimum and 30 inches (~~760~~ *762* mm) maximum above the finish floor or ground.

***11B*-903 Benches**

***11B*-903.1 General.** Benches shall comply with *11B*-903.

***11B*-903.2 Clear Floor or Ground Space.** Clear floor or ground space complying with *11B*-305 shall be provided and shall be positioned at the end of the bench seat and parallel to the short axis of the bench.

***11B*-903.3 Size.** Benches shall have seats that are ~~42~~ *48* inches (~~1065~~ *1219* mm) long minimum and 20 inches (~~510~~ *508* mm) deep minimum and 24 inches (610 mm) deep maximum.

***11B*-903.4 Back Support.** The bench shall provide for back support or shall be affixed to a wall *along its long dimension*. Back support shall be ~~42~~ *48* inches (~~1065~~ *1219* mm) long minimum and shall extend from a point 2 inches (51 mm) maximum above the seat surface to a point 18 inches (~~455~~ *457* mm) minimum above the seat surface. Back support shall be 2½ inches (64 mm) maximum from the rear edge of the seat measured horizontally.

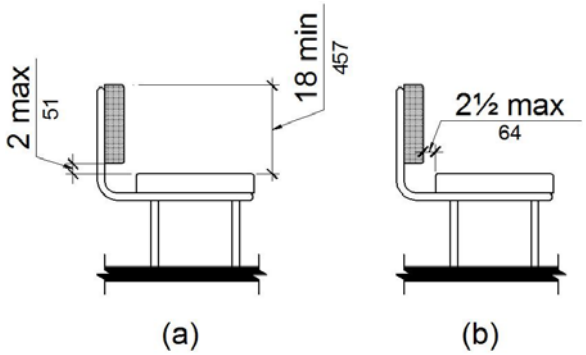

Figure *11B*-903.4
Bench Back Support

***11B*-903.5 Height.** The top of the bench seat surface shall be 17 inches (~~430~~ *432* mm) minimum and 19 inches (~~485~~ *483* mm) maximum above the finish floor or ground.

***11B*-903.6 Structural Strength.** *Benches shall be affixed to the wall or floor.* Allowable stresses shall not be exceeded for materials used when a vertical or horizontal force of 250 pounds (1112 N) is applied at any point on the seat, fastener, mounting device, or supporting structure.

***11B*-903.7 Wet Locations.** Where installed in wet locations, the surface of the seat shall be slip resistant and shall not accumulate water.

***11B*-904 Check-Out Aisles and Sales and Service Counters**

***11B*-904.1 General.** Check-out aisles and sales and service counters shall comply with the applicable requirements of *11B*-904.

***11B*-904.2 Approach.** All portions of counters required to comply with *11B*-904 shall be located adjacent to a walking surface complying with *11B*-403.

***11B*-904.3 Check-Out Aisles.** Check-out aisles shall comply with *11B*-904.3.

***11B*-904.3.1 Aisle.** Aisles shall comply with *11B*-403.

***11B*-904.3.2 Counter.** The counter surface height shall be 38 inches (965 mm) maximum above the finish floor or ground. The top of the counter edge protection shall be 2 inches (51 mm) maximum above the top of the counter surface on the aisle side of the check-out counter.

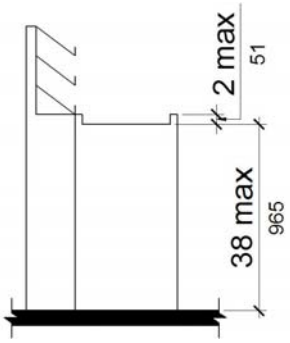

Figure *11B*-904.3.2
Check-Out Aisle Counters

***11B*-904.3.3 Check Writing Surfaces.** Where provided, check writing surfaces shall comply with *11B*-902.3.

***11B-904.3.4 Identification Sign.** When not all check-out aisles are accessible, accessible check-out aisles shall be identified by a sign clearly visible to a person in a wheelchair displaying the International Symbol of Accessibility complying with 11B-703.7.2.1. The sign shall be a minimum of 4 inches by 4 inches (102 mm by 102 mm).*

***11B*-904.4 Sales and Service Counters.** Sales counters and service counters shall comply with *11B*-904.4.1 or *11B*-904.4.2. The accessible portion of the counter top shall extend the same depth as the sales or service counter top.

EXCEPTION: In alterations, when the provision of a counter complying with *11B*-904.4 would result in a reduction of the number of existing counters at work stations or a reduction of the number of existing mail boxes, the counter shall be permitted to have a portion which is 24 inches (610 mm) long minimum complying with *11B*-904.4.1 provided that the required clear floor or ground space is centered on the accessible length of the counter.

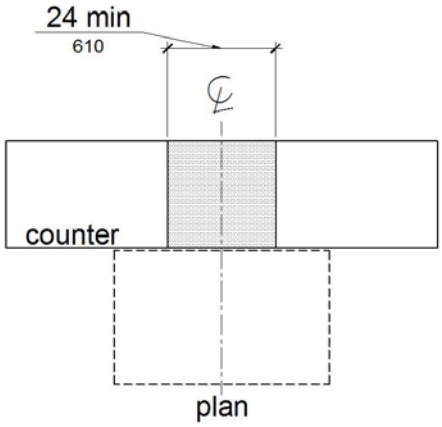

Figure *11B*-904.4 (Exception)
Alteration of Sales and Service Counters

***11B*-904.4.1 Parallel Approach.** A portion of the counter surface that is 36 inches (~~915~~ *914* mm) long minimum and ~~36~~ *34* inches (~~915~~ *864* mm) high maximum above the finish floor shall be provided. A clear floor or ground space complying with *11B*-305 shall be positioned for a parallel approach adjacent to the 36 inch (~~915~~ *914* mm) minimum length of counter.

EXCEPTION: Where the provided counter surface is less than 36 inches (~~915~~ *914* mm) long, the entire counter surface shall be ~~36~~ *34* inches (~~915~~ *864* mm) high maximum above the finish floor.

***11B*-904.4.2 Forward Approach.** A portion of the counter surface that is ~~30~~ *36* inches (~~760~~ *914* mm) long minimum and ~~36~~ *34* inches (~~915~~ *864* mm) high maximum shall be provided. Knee and toe space complying with *11B*-306 shall be provided under the counter. A clear floor or ground space complying with *11B*-305 shall be positioned for a forward approach to the counter.

***11B*-904.5 Food Service Lines.** Counters in food service lines shall comply with *11B*-904.5.

***11B*-904.5.1 Self-Service Shelves and Dispensing Devices.** Self-service shelves and dispensing devices for tableware, dishware, condiments, food and beverages shall comply with *11B*-308.

***11B*-904.5.2 Tray Slides.** The tops of tray slides shall be 28 inches (~~710~~ *711* mm) minimum and 34 inches (~~865~~ *864* mm) maximum above the finish floor or ground.

***11B*-904.6 Security Glazing.** Where counters or teller windows have security glazing to separate personnel from the public, a method to facilitate voice communication shall be provided. Telephone handset devices, if provided, shall comply with *11B*-704.3.

~~*CHAPTER*~~ *DIVISION* 10: RECREATION FACILITIES

*11B-*1001 General

***11B-*1001.1 Scope.** The provisions of ~~Chapter~~ *Division* 10 shall apply where required by ~~Chapter~~ *Division* 2 or where referenced by a requirement in this ~~document~~ *chapter*.

*11B-*1002 Amusement Rides

***11B-*1002.1 General.** Amusement rides shall comply with *11B-*1002.

***11B-*1002.2 Accessible Routes.** Accessible routes serving amusement rides shall comply with ~~Chapter~~ *Division* 4.

EXCEPTIONS: 1. In load or unload areas and on amusement rides, where compliance with *11B-*405.2 is not structurally or operationally feasible, ramp slope shall be permitted to be 1:8 maximum.

2. In load or unload areas and on amusement rides, handrails provided along walking surfaces complying with *11B-*403 and required on ramps complying with *11B-*405 shall not be required to comply with *11B-*505 where compliance is not structurally or operationally feasible.

***11B-*1002.3 Load and Unload Areas.** A turning space complying with *11B-*304.2 and *11B-*304.3 shall be provided in load and unload areas.

***11B-*1002.4 Wheelchair Spaces in Amusement Rides.** Wheelchair spaces in amusement rides shall comply with *11B-*1002.4.

***11B-*1002.4.1 Floor or Ground Surface.** The floor or ground surface of wheelchair spaces shall be stable and firm.

***11B-*1002.4.2 Slope.** The floor or ground surface of wheelchair spaces shall have a slope not steeper than 1:48 when in the load and unload position.

***11B-*1002.4.3 Gaps.** Floors of amusement rides with wheelchair spaces and floors of load and unload areas shall be coordinated so that, when amusement rides are at rest in the load and unload position, the vertical difference between the floors shall be within plus or minus 5/8 inches (~~16~~ *15.9* mm) and the horizontal gap shall be 3 inches (~~75~~ *76* mm) maximum under normal passenger load conditions.

EXCEPTION: Where compliance is not operationally or structurally feasible, ramps, bridge plates, or similar devices complying with the applicable requirements of 36 CFR 1192.83(c) shall be provided.

***11B-*1002.4.4 Clearances.** Clearances for wheelchair spaces shall comply with *11B-*1002.4.4.

EXCEPTIONS: 1. Where provided, securement devices shall be permitted to overlap required clearances.

2. Wheelchair spaces shall be permitted to be mechanically or manually repositioned.

3. Wheelchair spaces shall not be required to comply with *11B-*307.4.

***11B-*1002.4.4.1 Width and Length.** Wheelchair spaces shall provide a clear width of 30 inches (~~760~~ *762* mm) minimum and a clear length of 48 inches (~~1220~~ *1219* mm) minimum measured to 9 inches (~~230~~ *229* mm) minimum above the floor surface.

***11B*-1002.4.4.2 Side Entry.** Where wheelchair spaces are entered only from the side, amusement rides shall be designed to permit sufficient maneuvering clearance for individuals using a wheelchair or mobility aid to enter and exit the ride.

***11B*-1002.4.4.3 Permitted Protrusions in Wheelchair Spaces.** Objects are permitted to protrude a distance of 6 inches (~~150~~ *152* mm) maximum along the front of the wheelchair space, where located 9 inches (~~230~~ *229* mm) minimum and 27 inches (~~685~~ *686* mm) maximum above the floor or ground surface of the wheelchair space. Objects are permitted to protrude a distance of 25 inches (635 mm) maximum along the front of the wheelchair space, where located more than 27 inches (~~685~~ *686* mm) above the floor or ground surface of the wheelchair space.

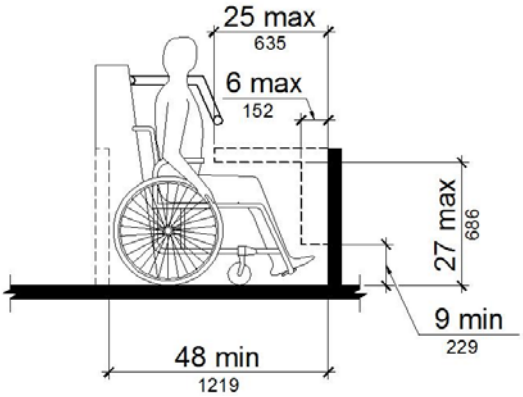

Figure *11B*-1002.4.4.3
Protrusions in Wheelchair Spaces in Amusement Rides

***11B*-1002.4.5 Ride Entry.** Openings providing entry to wheelchair spaces on amusement rides shall be 32 inches (~~815~~ *813* mm) minimum clear.

***11B*-1002.4.6 Approach.** One side of the wheelchair space shall adjoin an accessible route when in the load and unload position.

***11B*-1002.4.7 Companion Seats.** Where the interior width of the amusement ride is greater than 53 inches (~~1345~~ *1346* mm), seating is provided for more than one rider, and the wheelchair is not required to be centered within the amusement ride, a companion seat shall be provided for each wheelchair space.

***11B*-1002.4.7.1 Shoulder-to-Shoulder Seating.** Where an amusement ride provides shoulder-to-shoulder seating, companion seats shall be shoulder-to-shoulder with the adjacent wheelchair space.

EXCEPTION: Where shoulder-to-shoulder companion seating is not operationally or structurally feasible, compliance with this requirement shall be required to the maximum extent practicable.

***11B*-1002.5 Amusement Ride Seats Designed for Transfer.** Amusement ride seats designed for transfer shall comply with *11B*-1002.5 when positioned for loading and unloading.

***11B*-1002.5.1 Clear Floor or Ground Space.** A clear floor or ground space complying with *11B*-305 shall be provided in the load and unload area adjacent to the amusement ride seats designed for transfer.

***11B*-1002.5.2 Transfer Height.** The height of amusement ride seats designed for transfer shall be 14 inches (~~355~~ *356* mm) minimum and 24 inches (610 mm) maximum measured from the surface of the load and unload area.

***11B*-1002.5.3 Transfer Entry.** Where openings are provided for transfer to amusement ride seats, the openings shall provide clearance for transfer from a wheelchair or mobility aid to the amusement ride seat.

***11B*-1002.5.4 Wheelchair Storage Space.** Wheelchair storage spaces complying with *11B*-305 shall be provided in or adjacent to unload areas for each required amusement ride seat designed for transfer and shall not overlap any required means of egress or accessible route.

***11B*-1002.6 Transfer Devices for Use with Amusement Rides.** Transfer devices for use with amusement rides shall comply with *11B*-1002.6 when positioned for loading and unloading.

***11B*-1002.6.1 Clear Floor or Ground Space.** A clear floor or ground space complying with *11B*-305 shall be provided in the load and unload area adjacent to the transfer device.

***11B*-1002.6.2 Transfer Height.** The height of transfer device seats shall be 14 inches (~~355~~ *356* mm) minimum and 24 inches (610 mm) maximum measured from the load and unload surface.

***11B*-1002.6.3 Wheelchair Storage Space.** Wheelchair storage spaces complying with *11B*-305 shall be provided in or adjacent to unload areas for each required transfer device and shall not overlap any required means of egress or accessible route.

***11B*-1003 Recreational Boating Facilities**

***11B*-1003.1 General.** Recreational boating facilities shall comply with *11B*-1003.

***11B*-1003.2 Accessible Routes.** Accessible routes serving recreational boating facilities, including gangways and floating piers, shall comply with ~~Chapter~~ *Division* 4 except as modified by the exceptions in *11B*-1003.2.

***11B*-1003.2.1 Boat Slips.** Accessible routes serving boat slips shall be permitted to use the exceptions in *11B*-1003.2.1.

EXCEPTIONS: 1. Where an existing gangway or series of gangways is replaced or altered, an increase in the length of the gangway shall not be required to comply with *11B*-1003.2 unless required by *11B*-202.4.

2. Gangways shall not be required to comply with the maximum rise specified in *11B*-405.6.

3. Where the total length of a gangway or series of gangways serving as part of a required accessible route is 80 feet (~~24 m~~ *12192 mm*) minimum, gangways shall not be required to comply with *11B*-405.2.

4. Where facilities contain fewer than 25 boat slips and the total length of the gangway or series of gangways serving as part of a required accessible route is 30 feet (~~9145~~ *9144* mm) minimum, gangways shall not be required to comply with *11B*-405.2.

5. Where gangways connect to transition plates, landings specified by *11B*-405.7 shall not be required.

6. Where gangways and transition plates connect and are required to have handrails, handrail extensions shall not be required. Where handrail extensions are provided on gangways or transition plates, the handrail extensions shall not be required to be parallel with the ground or floor surface.

7. The cross slope specified in *11B*-403.3 and *11B*-405.3 for gangways, transition plates, and floating piers that are part of accessible routes shall be measured in the static position.

8. Changes in level complying with *11B*-303.3 and *11B*-303.4 shall be permitted on the surfaces of gangways and boat launch ramps.

***11B*-1003.2.2 Boarding Piers at Boat Launch Ramps.** Accessible routes serving boarding piers at boat launch ramps shall be permitted to use the exceptions in *11B*-1003.2.2.

EXCEPTIONS: 1. Accessible routes serving floating boarding piers shall be permitted to use Exceptions 1, 2, 5, 6, 7 and 8 in *11B*-1003.2.1.

2. Where the total length of the gangway or series of gangways serving as part of a required accessible route is 30 feet (~~9145~~ *9144* mm) minimum, gangways shall not be required to comply with *11B*-405.2.

3. Where the accessible route serving a floating boarding pier or skid pier is located within a boat launch ramp, the portion of the accessible route located within the boat launch ramp shall not be required to comply with *11B*-405.

***11B*-1003.3 Clearances.** Clearances at boat slips and on boarding piers at boat launch ramps shall comply with *11B*-1003.3.

***11B*-1003.3.1 Boat Slip Clearance.** Boat slips shall provide clear pier space 60 inches (~~1525~~ *1524* mm) wide minimum and at least as long as the boat slips. Each 10 feet (~~3050~~ *3048* mm) maximum of linear pier edge serving boat slips shall contain at least one continuous clear opening 60 inches (~~1525~~ *1524* mm) wide minimum.

EXCEPTIONS: 1. Clear pier space shall be permitted to be 36 inches (~~915~~ *914* mm) wide minimum for a length of 24 inches (610 mm) maximum, provided that multiple 36 inch (~~915~~ *914* mm) wide segments are separated by segments that are 60 inches (~~1525~~ *1524* mm) wide minimum and 60 inches (~~1525~~ *1524* mm) long minimum.

2. Edge protection shall be permitted at the continuous clear openings, provided that it is 4 inches (~~100~~ *102* mm) high maximum and 2 inches (51 mm) wide maximum.

3. In existing piers, clear pier space shall be permitted to be located perpendicular to the boat slip and shall extend the width of the boat slip, where the facility has at least one boat slip complying with *11B*-1003.3, and further compliance with *11B*-1003.3 would result in a reduction in the number of boat slips available or result in a reduction of the widths of existing slips.

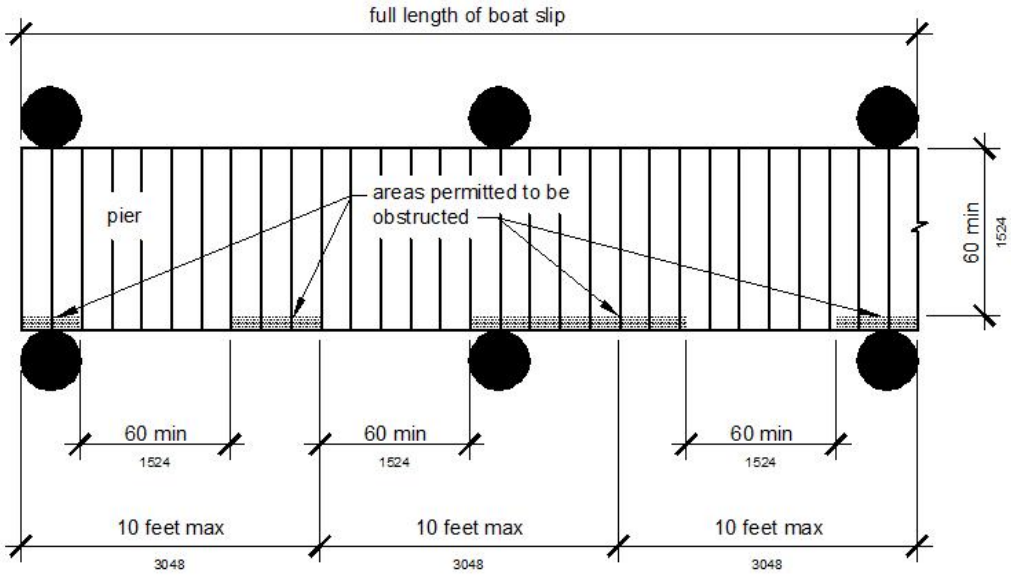

Figure *11B*-1003.3.1
Boat Slip Clearance

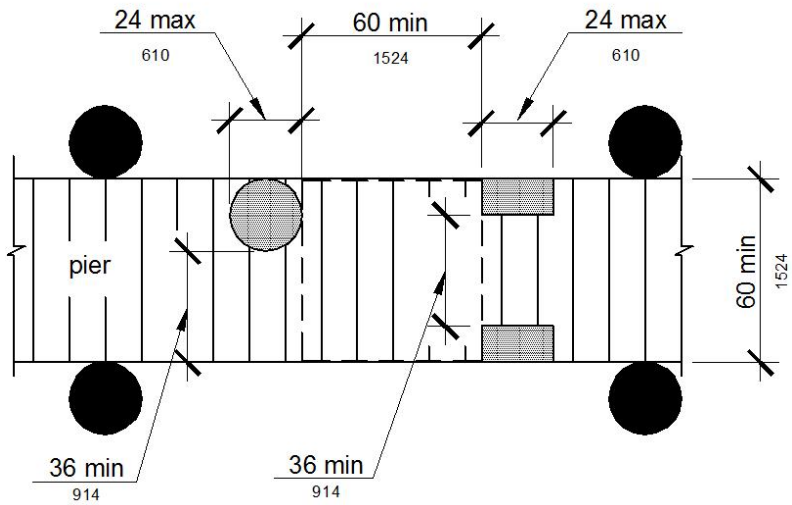

Figure *11B*-1003.3.1 (Exception 1)
Clear Pier Space Reduction at Boat Slips

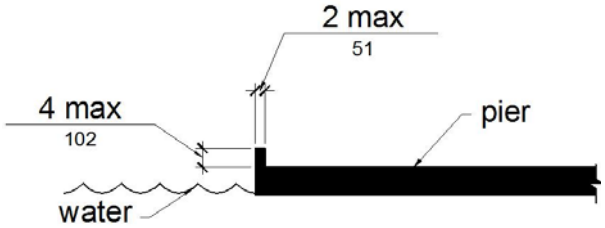

Figure *11B*-1003.3.1 (Exception 2)
Edge Protection at Boat Slips

***11B*-1003.3.2 Boarding Pier Clearances.** Boarding piers at boat launch ramps shall provide clear pier space 60 inches (~~1525~~ *1524* mm) wide minimum and shall extend the full length of the boarding pier. Every 10 feet (~~3050~~ *3048* mm) maximum of linear pier edge shall contain at least one continuous clear opening 60 inches (~~1525~~ *1524* mm) wide minimum.

EXCEPTIONS: 1. The clear pier space shall be permitted to be 36 inches (~~915~~ *914* mm) wide minimum for a length of 24 inches (610 mm) maximum provided that multiple 36 inch (~~915~~ *914* mm) wide segments are separated by segments that are 60 inches (~~1525~~ *1524* mm) wide minimum and 60 inches (~~1525~~ *1524* mm) long minimum.

2. Edge protection shall be permitted at the continuous clear openings provided that it is 4 inches (~~100~~ *102* mm) high maximum and 2 inches (51 mm) wide maximum.

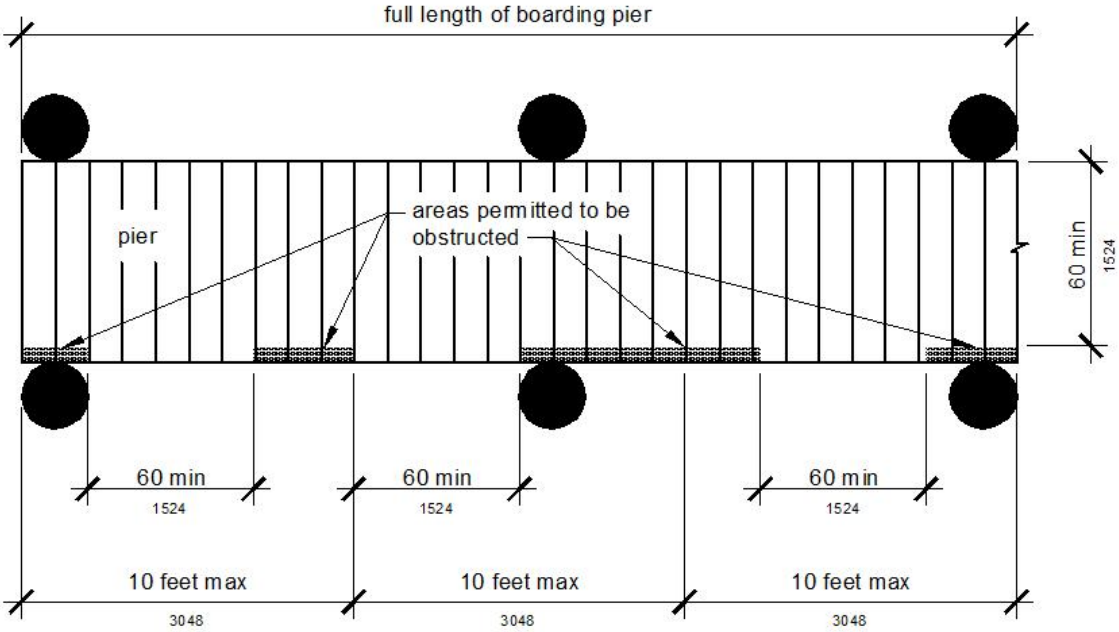

Figure *11B*-1003.3.2
Boarding Pier Clearance

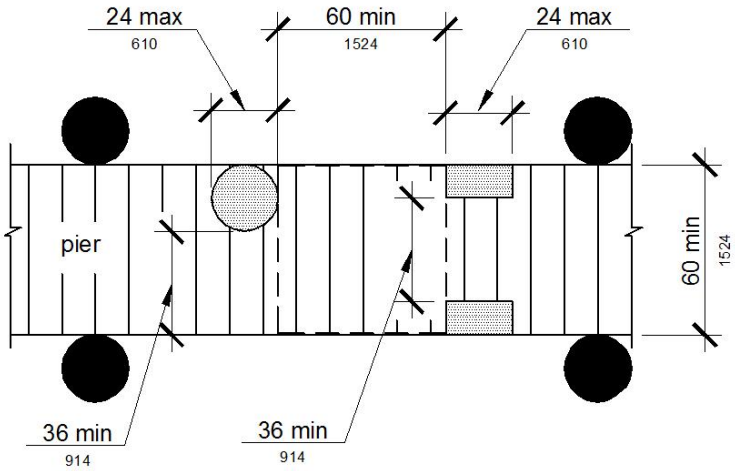

Figure *11B*-1003.3.2 (Exception 1)
Clear Pier Space Reduction at Boarding Piers

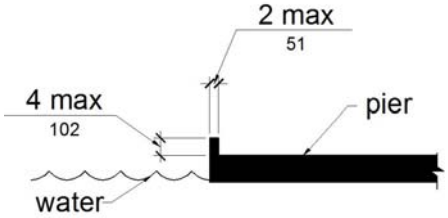

Figure *11B*-1003.3.2 (Exception 2)
Edge Protection at Boarding Piers

***11B*-1004 Exercise Machines and Equipment**

***11B*-1004.1 Clear Floor Space.** Exercise machines and equipment shall have a clear floor space complying with *11B*-305 positioned for transfer or for use by an individual seated in a wheelchair. Clear floor or ground spaces required at exercise machines and equipment shall be permitted to overlap.

***11B*-1005 Fishing Piers and Platforms**

***11B*-1005.1 Accessible Routes.** Accessible routes serving fishing piers and platforms, including gangways and floating piers, shall comply with ~~Chapter~~ *Division* 4.

EXCEPTIONS: 1. Accessible routes serving floating fishing piers and platforms shall be permitted to use Exceptions 1, 2, 5, 6, 7 and 8 in *11B*-1003.2.1.

2. Where the total length of the gangway or series of gangways serving as part of a required accessible route is 30 feet (~~9145~~ *9144* mm) minimum, gangways shall not be required to comply with *11B*-405.2.

***11B*-1005.2 Railings.** Where provided, railings, guards, or handrails shall comply with *11B*-1005.2.

***11B*-1005.2.1 Height.** At least 25 percent of the railings, guards, or handrails shall be 34 inches (~~865~~ *864* mm) maximum above the ground or deck surface.

EXCEPTION: Where a guard complying with ~~sections 1003.2.12.1 and 1003.2.12.2 of the International Building Code (2000 edition) or sections 1012.2 and 1012.3 of the International Building Code (2003 edition) (incorporated by reference, see "Referenced Standards" in Chapter 1)~~ *Chapter 10, Sections 1013.2 through 1013.4* is provided, the guard shall not be required to comply with *11B*-1005.2.1.

***11B*-1005.2.1.1 Dispersion.** Railings, guards, or handrails required to comply with *11B*-1005.2.1 shall be dispersed throughout the fishing pier or platform.

***11B*-1005.3 Edge Protection.** Where railings, guards, or handrails complying with *11B*-1005.2 are provided, edge protection complying with *11B*-1005.3.1 or *11B*-1005.3.2 shall be provided.

***11B*-1005.3.1 Curb or Barrier.** Curbs or barriers shall extend 2 inches (51 mm) minimum above the surface of the fishing pier or platform.

***11B*-1005.3.2 Extended Ground or Deck Surface.** The ground or deck surface shall extend 12 inches (305 mm) minimum beyond the inside face of the railing. Toe clearance shall be provided and shall be 30 inches (~~760~~ *762* mm) wide minimum and 9 inches (~~230~~ *229* mm) minimum above the ground or deck surface beyond the railing.

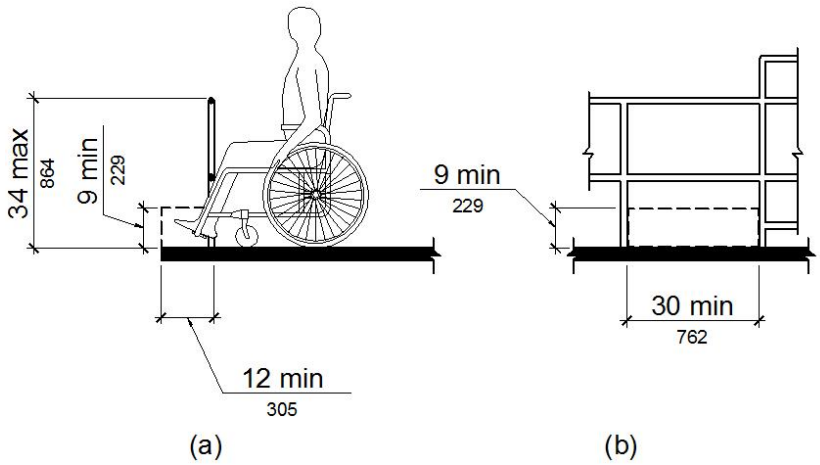

Figure *11B*-1005.3.2
Extended Ground or Deck Surface at Fishing Piers and Platforms

***11B*-1005.4 Clear Floor or Ground Space.** At each location where there are railings, guards, or handrails complying with *11B*-1005.2.1, a clear floor or ground space complying with *11B*-305 shall be provided. Where there are no railings, guards, or handrails, at least one clear floor or ground space complying with *11B*-305 shall be provided on the fishing pier or platform.

***11B*-1005.5 Turning Space.** At least one turning space complying with *11B*-304.3 shall be provided on fishing piers and platforms.

11B-1006 Golf Facilities

***11B*-1006.1 General.** Golf facilities shall comply with *11B*-1006.

***11B*-1006.2 Accessible Routes.** Accessible routes serving teeing grounds, practice teeing grounds, putting greens, practice putting greens, teeing stations at driving ranges, course weather shelters, golf car rental areas, bag drop areas, and course toilet rooms shall comply with ~~Chapter~~ *Division* 4 and shall be 48 inches (~~1220~~ *1219* mm) wide minimum. Where handrails are provided, accessible routes shall be 60 inches (~~1525~~ *1524* mm) wide minimum.

EXCEPTION: Handrails shall not be required on golf courses. Where handrails are provided on golf courses, the handrails shall not be required to comply with *11B*-505.

***11B*-1006.3 Golf Car Passages.** Golf car passages shall comply with *11B*-1006.3.

***11B*-1006.3.1 Clear Width.** The clear width of golf car passages shall be 48 inches (~~1220~~ *1219* mm) minimum.

***11B*-1006.3.2 Barriers.** Where curbs or other constructed barriers prevent golf cars from entering a fairway, openings 60 inches (~~1525~~ *1524* mm) wide minimum shall be provided at intervals not to exceed 75 yards (69 m).

***11B*-1006.4 Weather Shelters.** A clear floor or ground space 60 inches (~~1525~~ *1524* mm) minimum by 96 inches (~~2440~~ *2438* mm) minimum shall be provided within weather shelters.

***11B*-1007 Miniature Golf Facilities**

***11B*-1007.1 General.** Miniature golf facilities shall comply with *11B*-1007.

***11B*-1007.2 Accessible Routes.** Accessible routes serving holes on miniature golf courses shall comply with ~~Chapter~~ *Division* 4. Accessible routes located on playing surfaces of miniature golf holes shall be permitted to use the exceptions in *11B*-1007.2.

EXCEPTIONS: 1. Playing surfaces shall not be required to comply with *11B*-302.2.

2. Where accessible routes intersect playing surfaces of holes, a 1 inch (25 mm) maximum curb shall be permitted for a width of 32 inches (~~815~~ *813* mm) minimum.

3. A slope not steeper than 1:4 for a 4 inch (~~100~~ *102* mm) maximum rise shall be permitted.

4. Ramp landing slopes specified by *11B*-405.7.1 shall be permitted to be 1:20 maximum.

5. Ramp landing length specified by *11B*-405.7.3 shall be permitted to be 48 inches (~~1220~~ *1219* mm) long minimum.

6. Ramp landing size specified by *11B*-405.7.4 shall be permitted to be 48 inches (~~1220~~ *1219* mm) minimum by 60 inches (~~1525~~ *1524* mm) minimum.

7. Handrails shall not be required on holes. Where handrails are provided on holes, the handrails shall not be required to comply with *11B*-505.

***11B*-1007.3 Miniature Golf Holes.** Miniature golf holes shall comply with *11B*-1007.3.

***11B*-1007.3.1 Start of Play.** A clear floor or ground space 48 inches (~~1220~~ *1219* mm) minimum by 60 inches (~~1525~~ *1524* mm) minimum with slopes not steeper than 1:48 shall be provided at the start of play.

***11B*-1007.3.2 Golf Club Reach Range Area.** All areas within holes where golf balls rest shall be within 36 inches (~~915~~ *914* mm) maximum of a clear floor or ground space 36 inches (~~915~~ *914* mm) wide minimum and 48 inches (~~1220~~ *1219* mm) long minimum having a running slope not steeper than 1:20. The clear floor or ground space shall be served by an accessible route.

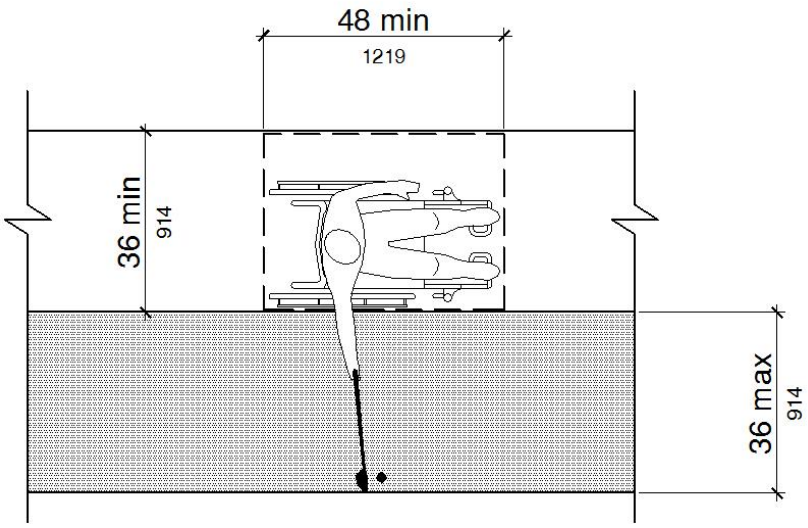

Note: Running Slope of Clear Floor or Ground Space Not Steeper Than 1:20

Figure *11B*-1007.3.2
Golf Club Reach Range Area

***11B*-1008 Play Areas**

***11B*-1008.1 General.** Play areas shall comply with *11B*-1008.

***11B*-1008.2 Accessible Routes.** Accessible routes serving play areas shall comply with ~~Chapter~~ *Division* 4 and *11B*-1008.2 and shall be permitted to use the exceptions in *11B*-1008.2.1 through *11B*-1008.2.3. Where accessible routes serve ground level play components, the vertical clearance shall be 80 inches high (~~2030~~ *2032* mm) minimum.

***11B*-1008.2.1 Ground Level and Elevated Play Components.** Accessible routes serving ground level play components and elevated play components shall be permitted to use the exceptions in *11B*-1008.2.1.

EXCEPTIONS: 1. Transfer systems complying with *11B*-1008.3 shall be permitted to connect elevated play components except where 20 or more elevated play components are provided no more than 25 percent of the elevated play components shall be permitted to be connected by transfer systems.

2. Where transfer systems are provided, an elevated play component shall be permitted to connect to another elevated play component as part of an accessible route.

***11B*-1008.2.2 Soft Contained Play Structures.** Accessible routes serving soft contained play structures shall be permitted to use the exception in *11B*-1008.2.2.

EXCEPTION: Transfer systems complying with *11B*-1008.3 shall be permitted to be used as part of an accessible route.

***11B*-1008.2.3 Water Play Components.** Accessible routes serving water play components shall be permitted to use the exceptions in *11B*-1008.2.3.

EXCEPTIONS: 1. Where the surface of the accessible route, clear floor or ground spaces, or turning spaces serving water play components is submerged, compliance with *11B*-302, *11B*-403.3, *11B*-405.2, *11B*-405.3, and *11B*-1008.2.6 shall not be required.

2. Transfer systems complying with *11B*-1008.3 shall be permitted to connect elevated play components in water.

***11B*-1008.2.4 Clear Width.** Accessible routes connecting play components shall provide a clear width complying with *11B*-1008.2.4.

***11B*-1008.2.4.1 Ground Level.** At ground level, the clear width of accessible routes shall be 60 inches (~~1525~~ *1524* mm) minimum.

EXCEPTIONS: 1. In play areas less than 1000 square feet (93 m^2), the clear width of accessible routes shall be permitted to be 44 inches (~~1120~~ *1118* mm) minimum, if at least one turning space complying with *11B*-304.3 is provided where the restricted accessible route exceeds 30 feet (~~9145~~ *9144* mm) in length.

2. The clear width of accessible routes shall be permitted to be 36 inches (~~915~~ *914* mm) minimum for a distance of 60 inches (~~1525~~ *1524* mm) maximum provided that multiple reduced width segments are separated by segments that are 60 inches (~~1525~~ *1524* mm) wide minimum and 60 inches (~~1525~~ *1524* mm) long minimum.

***11B*-1008.2.4.2 Elevated.** The clear width of accessible routes connecting elevated play components shall be 36 inches (~~915~~ *914* mm) minimum.

EXCEPTIONS: 1. The clear width of accessible routes connecting elevated play components shall be permitted to be reduced to 32 inches (~~815~~ *813* mm) minimum for a distance of 24 inches (610 mm) maximum provided that reduced width segments are separated by segments that are 48 inches (~~1220~~ *1219* mm) long minimum and 36 inches (~~915~~ *914* mm) wide minimum.

2. The clear width of transfer systems connecting elevated play components shall be permitted to be 24 inches (610 mm) minimum.

***11B*-1008.2.5 Ramps.** Within play areas, ramps connecting ground level play components and ramps connecting elevated play components shall comply with *11B*-1008.2.5.

***11B*-1008.2.5.1 Ground Level.** Ramp runs connecting ground level play components shall have a running slope not steeper than 1:16.

***11B*-1008.2.5.2 Elevated.** The rise for any ramp run connecting elevated play components shall be 12 inches (305 mm) maximum.

***11B*-1008.2.5.3 Handrails.** Where required on ramps serving play components, the handrails shall comply with *11B*-505 except as modified by *11B*-1008.2.5.3.

EXCEPTIONS: 1. Handrails shall not be required on ramps located within ground level use zones.

2. Handrail extensions shall not be required.

***11B*-1008.2.5.3.1 Handrail Gripping Surfaces.** Handrail gripping surfaces with a circular cross section shall have an outside diameter of 0.95 inch (24 mm) minimum and 1.55 inches (39 mm) maximum. Where the shape of the gripping surface is non-circular, the handrail shall provide an equivalent gripping surface.

***11B*-1008.2.5.3.2 Handrail Height.** The top of handrail gripping surfaces shall be 20 inches (~~510~~ *508* mm) minimum and 28 inches (~~710~~ *711* mm) maximum above the ramp surface.

***11B*-1008.2.6 Ground Surfaces.** Ground surfaces on accessible routes, clear floor or ground spaces, and turning spaces shall comply with *11B*-1008.2.6.

***11B*-1008.2.6.1 Accessibility.** Ground surfaces shall comply with ASTM F 1951 ~~(incorporated by reference, see "Referenced Standards" in Chapter 1)~~. Ground surfaces shall be inspected and maintained regularly and frequently to ensure continued compliance with ASTM F 1951.

***11B*-1008.2.6.2 Use Zones.** Ground surfaces located within use zones shall comply with ASTM F 1292 ~~(1999 edition or 2004 edition) (incorporated by reference, see "Referenced Standards" in Chapter 1)~~.

***11B*-1008.3 Transfer Systems.** Where transfer systems are provided to connect to elevated play components, transfer systems shall comply with *11B*-1008.3.

***11B*-1008.3.1 Transfer Platforms.** Transfer platforms shall be provided where transfer is intended from wheelchairs or other mobility aids. Transfer platforms shall comply with *11B*-1008.3.1.

***11B*-1008.3.1.1 Size.** Transfer platforms shall have level surfaces 14 inches (~~355~~ *356* mm) deep minimum and 24 inches (610 mm) wide minimum.

***11B*-1008.3.1.2 Height.** The height of transfer platforms shall be 11 inches (~~280~~ *279* mm) minimum and 18 inches (~~455~~ *457* mm) maximum measured to the top of the surface from the ground or floor surface.

***11B*-1008.3.1.3 Transfer Space.** A transfer space complying with *11B*-305.2 and *11B*-305.3 shall be provided adjacent to the transfer platform. The 48 inch (~~1220~~ *1219* mm) long minimum dimension of the transfer space shall be centered on and parallel to the 24 inch (610 mm) long minimum side of the transfer platform. The side of the transfer platform serving the transfer space shall be unobstructed.

***11B*-1008.3.1.4 Transfer Supports.** At least one means of support for transferring shall be provided.

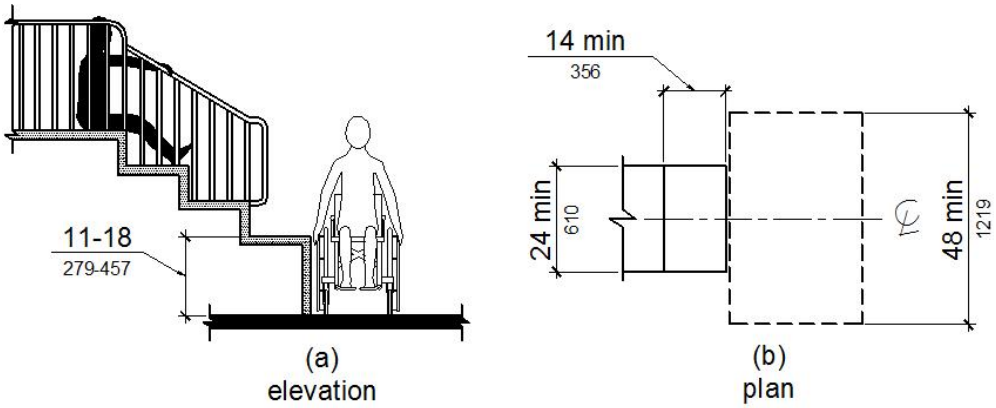

Figure *11B*-1008.3.1
Transfer Platforms

***11B*-1008.3.2 Transfer Steps.** Transfer steps shall be provided where movement is intended from transfer platforms to levels with elevated play components required to be on accessible routes. Transfer steps shall comply with *11B*-1008.3.2.

***11B*-1008.3.2.1 Size.** Transfer steps shall have level surfaces 14 inches (~~355~~ *356* mm) deep minimum and 24 inches (610 mm) wide minimum.

***11B*-1008.3.2.2 Height.** Each transfer step shall be 8 inches (~~205~~ *203* mm) high maximum.

***11B*-1008.3.2.3 Transfer Supports.** At least one means of support for transferring shall be provided.

11B-1008.3.2.4 Contrasting Stripe. *Striping complying with 11B-504.4.1 shall be provided at each transfer step.*

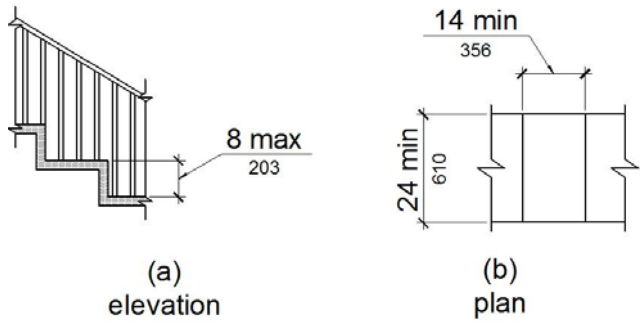

Figure *11B*-1008.3.2
Transfer Steps

***11B*-1008.4 Play Components.** Ground level play components on accessible routes and elevated play components connected by ramps shall comply with *11B*-1008.4.

***11B*-1008.4.1 Turning Space.** At least one turning space complying with *11B*-304 shall be provided on the same level as play components. Where swings are provided, the turning space shall be located immediately adjacent to the swing.

***11B*-1008.4.2 Clear Floor or Ground Space.** Clear floor or ground space complying with *11B*-305.2 and *11B*-305.3 shall be provided at play components.

***11B*-1008.4.3 Play Tables.** Where play tables are provided, knee clearance 24 inches (610 mm) high minimum, 17 inches deep (~~430~~ *432* mm) minimum, and 30 inches (~~760~~ *762* mm) wide minimum shall be provided. The tops of rims, curbs, or other obstructions shall be 31 inches (~~785~~ *787* mm) high maximum.

EXCEPTION: Play tables designed and constructed primarily for children 5 years and younger shall not be required to provide knee clearance where the clear floor or ground space required by *11B*-1008.4.2 is arranged for a parallel approach.

***11B*-1008.4.4 Entry Points and Seats.** Where play components require transfer to entry points or seats, the entry points or seats shall be 11 inches (~~280~~ *279* mm) minimum and 24 inches (610 mm) maximum from the clear floor or ground space.

EXCEPTION: Entry points of slides shall not be required to comply with *11B*-1008.4.4.

***11B*-1008.4.5 Transfer Supports.** Where play components require transfer to entry points or seats, at least one means of support for transferring shall be provided.

***11B*-1009 Swimming Pools, Wading Pools, and Spas**

***11B*-1009.1 General.** Where provided, pool lifts, sloped entries, transfer walls, transfer systems, and pool stairs shall comply with *11B*-1009.

***11B*-1009.2 Pool Lifts.** Pool lifts shall comply with *11B*-1009.2.

***11B*-1009.2.1 Pool Lift Location.** Pool lifts shall be located where the water level ~~does not exceed 48 inches (1220 mm).~~ *is 36 inches (914 mm) minimum and 48 inches (1219 mm) maximum.*

EXCEPTIONS: 1. Where the entire pool depth is greater than 48 inches (~~1220~~ *1219* mm), compliance with *11B*-1009.2.1 shall not be required.

2. Where multiple pool lift locations are provided, no more than one pool lift shall be required to be located in an area where the water level is 48 inches (~~1220~~ *1219* mm) maximum.

***3.** Where the water depth of the entire swimming pool, wading pool or spa is less than 36 inches (914 mm), pool lifts shall be located where the water level is less than 36 inches (914 mm).*

***11B*-1009.2.2 Seat Location.** In the raised position, the centerline of the seat shall be located over the deck and 16 inches (~~405~~ *406* mm) minimum from the edge of the pool. The deck surface between the centerline of the seat and the pool edge shall have a slope not steeper than 1:48.

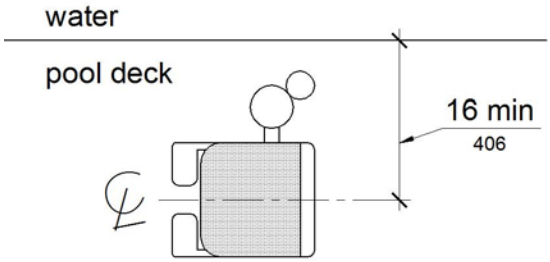

Figure *11B*-1009.2.2
Pool Lift Seat Location

***11B*-1009.2.3 Clear Deck Space.** On the side of the seat opposite the water, a clear deck space shall be provided parallel with the seat. The space shall be 36 inches (~~915~~ *914* mm) wide minimum and shall extend forward 48 inches (~~1220~~ *1219* mm) minimum from a line located 12 inches (305 mm) behind the rear edge of the seat. The clear deck space shall have a slope not steeper than 1:48.

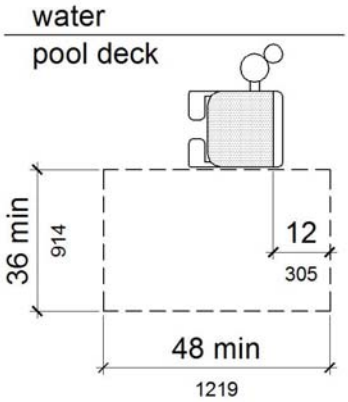

Figure *11B*-1009.2.3
Clear Deck Space at Pool Lifts

***11B*-1009.2.4 Seat ~~Height~~.** *The seat shall be rigid and shall have a back support that is at least 12 inches (305 mm) tall.* The height of the lift seat shall be designed to allow a stop at ~~16 inches (405 mm)~~ *17 inches (423 mm)* minimum to 19 inches (~~485~~ *483* mm) maximum measured from the deck to

the top of the seat surface when in the raised (load) position. *The seat shall have a restraint for the use of the occupant with operable parts complying with 11B-309.*

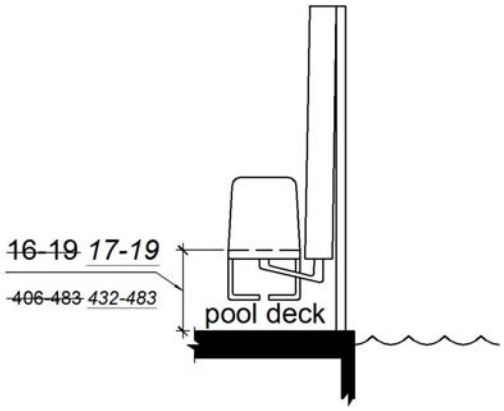

Figure *11B*-1009.2.4
Pool Lift Seat Height

***11B*-1009.2.5 Seat Width.** The seat shall be 16 inches (405 *406* mm) wide minimum.

***11B*-1009.2.6 Footrests and Armrests.** Footrests shall be provided and shall move with the seat. *The seat shall have two armrests.* If provided, the *The* armrest positioned opposite the water shall be removable or shall fold clear of the seat when the seat is in the raised (load) position.

EXCEPTION: Footrests shall not be required on pool lifts provided in spas.

***11B*-1009.2.7 Operation.** The lift shall be capable of unassisted operation from both the deck and water levels. Controls and operating mechanisms shall be unobstructed when the lift is in use and shall comply with *11B*-309.4. *The lift shall be stable and not permit unintended movement when a person is getting into or out of the seat.*

***11B*-1009.2.8 Submerged Depth.** The lift shall be designed so that the seat will submerge to a water depth of 18 inches (455 *457* mm) minimum below the stationary water level.

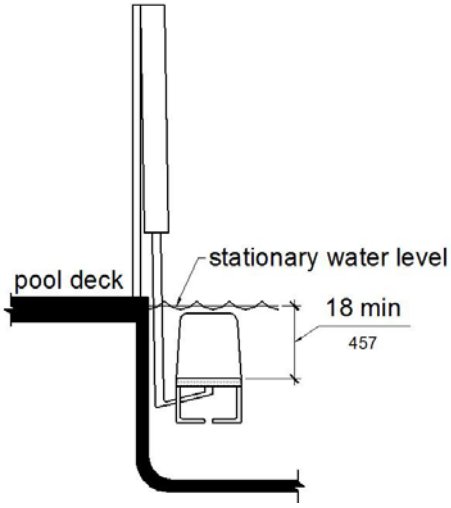

Figure *11B*-1009.2.8
Pool Lift Submerged Depth

***11B*-1009.2.9 Lifting Capacity.** Single person pool lifts shall have a weight capacity of 300 pounds (136 kg) minimum and be capable of sustaining a static load of at least one and a half times the rated load.

***11B*-1009.3 Sloped Entries.** Sloped entries shall comply with *11B*-1009.3.

***11B*-1009.3.1 Sloped Entries.** Sloped entries shall comply with ~~Chapter~~ *Division* 4 except as modified in ~~1109.3.1 through 1109.3.3~~ *11B-1009.3.1 through 11B-1009.3.3*.

EXCEPTION: Where sloped entries are provided, the surfaces shall not be required to be slip resistant.

***11B*-1009.3.2 Submerged Depth.** Sloped entries shall extend to a depth of 24 inches (610 mm) minimum and 30 inches (~~760~~ *762* mm) maximum below the stationary water level. Where landings are required by *11B*-405.7, at least one landing shall be located 24 inches (610 mm) minimum and 30 inches (~~760~~ *762* mm) maximum below the stationary water level.

EXCEPTION: In wading pools, the sloped entry and landings, if provided, shall extend to the deepest part of the wading pool.

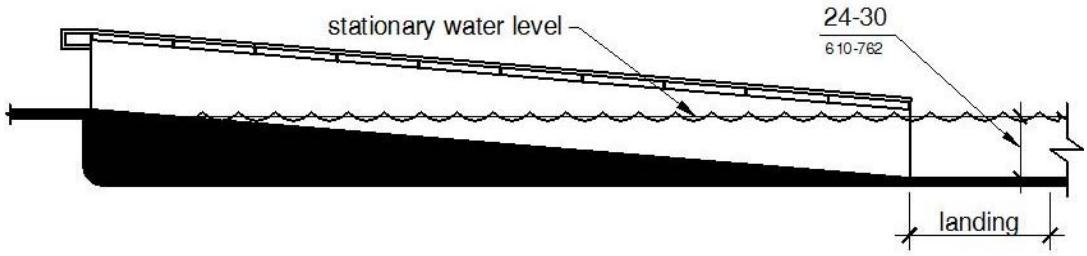

Figure *11B*-1009.3.2
Sloped Entry Submerged Depth

***11B*-1009.3.3 Handrails.** At least two handrails complying with *11B*-505 shall be provided on the sloped entry. The clear width between required handrails shall be 33 inches (~~840~~ *838* mm) minimum and 38 inches (965 mm) maximum.

EXCEPTIONS: 1. Handrail extensions specified by *11B*-505.10.1 shall not be required at the bottom landing serving a sloped entry.

2. Where a sloped entry is provided for wave action pools, leisure rivers, sand bottom pools, and other pools where user access is limited to one area, the handrails shall not be required to comply with the clear width requirements of *11B*-1009.3.3.

3. Sloped entries in wading pools shall not be required to provide handrails complying with *11B*-1009.3.3. If provided, handrails on sloped entries in wading pools shall not be required to comply with *11B*-505.

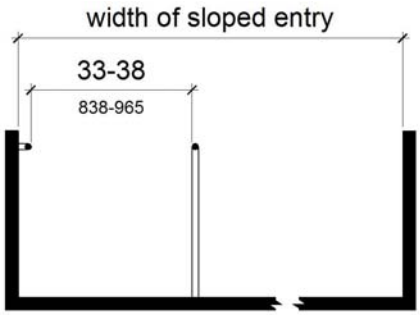

Figure *11B*-1009.3.3
Handrails for Sloped Entry

***11B*-1009.4 Transfer Walls.** Transfer walls shall comply with *11B*-1009.4.

***11B*-1009.4.1 Clear Deck Space.** A clear deck space of 60 inches (~~1525~~ *1524* mm) minimum by 60 inches (~~1525~~ *1524* mm) minimum with a slope not steeper than 1:48 shall be provided at the base of the transfer wall. Where one grab bar is provided, the clear deck space shall be centered on the grab bar. Where two grab bars are provided, the clear deck space shall be centered on the clearance between the grab bars.

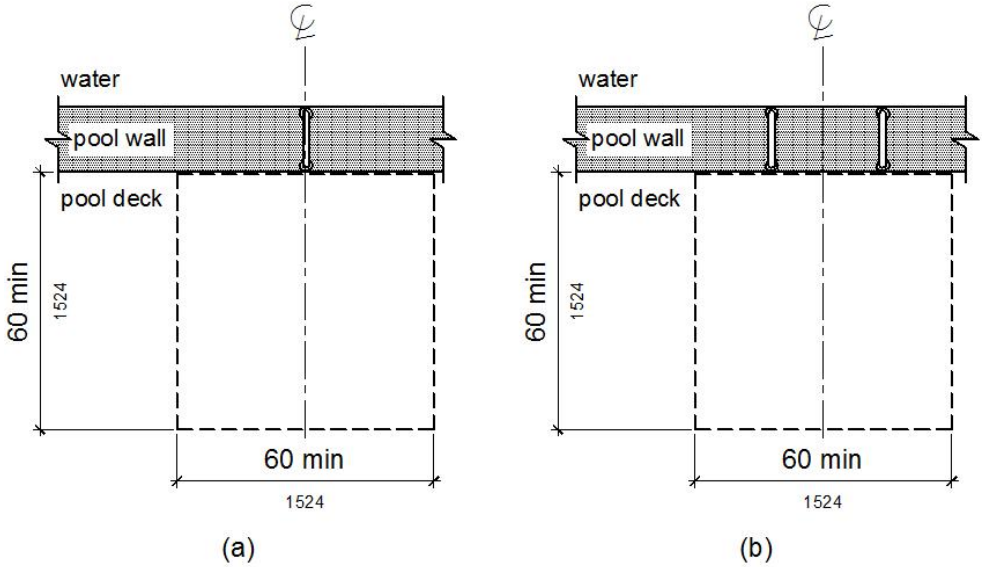

Figure *11B*-1009.4.1
Clear Deck Space at Transfer Walls

***11B*-1009.4.2 Height.** The height of the transfer wall shall be 16 inches (~~405~~ *406* mm) minimum and 19 inches (~~485~~ *483* mm) maximum measured from the deck.

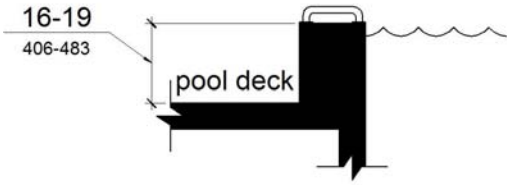

Figure *11B*-1009.4.2
Transfer Wall Height

***11B*-1009.4.3 Wall Depth and Length.** The depth of the transfer wall shall be 12 inches (305 mm) minimum and 16 inches (~~405~~ *406* mm) maximum. The length of the transfer wall shall be 60 inches (~~1525~~ *1524* mm) minimum and shall be centered on the clear deck space.

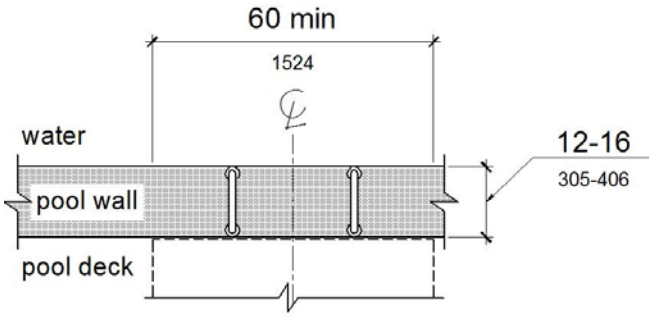

Figure *11B*-1009.4.3
Depth and Length of Transfer Walls

***11B*-1009.4.4 Surface.** Surfaces of transfer walls shall not be sharp and shall have rounded edges.

***11B*-1009.4.5 Grab Bars.** At least one grab bar complying with *11B*-609 shall be provided on the transfer wall. Grab bars shall be perpendicular to the pool wall and shall extend the full depth of the transfer wall. The top of the gripping surface shall be 4 inches (~~100~~ *102* mm) minimum and 6 inches (~~150~~ *152* mm) maximum above transfer walls. Where one grab bar is provided, clearance shall be 24 inches (610 mm) minimum on both sides of the grab bar. Where two grab bars are provided, clearance between grab bars shall be 24 inches (610 mm) minimum.

EXCEPTION: Grab bars on transfer walls shall not be required to comply with *11B*-609.4.

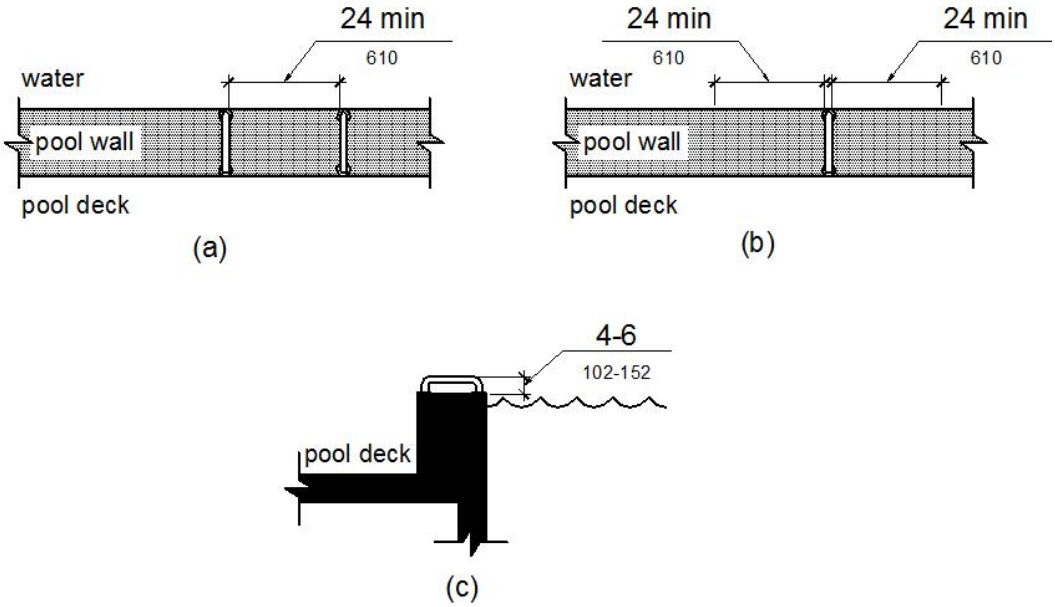

Figure *11B*-1009.4.5
Grab Bars for Transfer Walls

***11B*-1009.5 Transfer Systems.** Transfer systems shall comply with *11B*-1009.5.

***11B*-1009.5.1 Transfer Platform.** A transfer platform shall be provided at the head of each transfer system. Transfer platforms shall provide 19 inches (~~485~~ *483* mm) minimum clear depth and 24 inches (610 mm) minimum clear width.

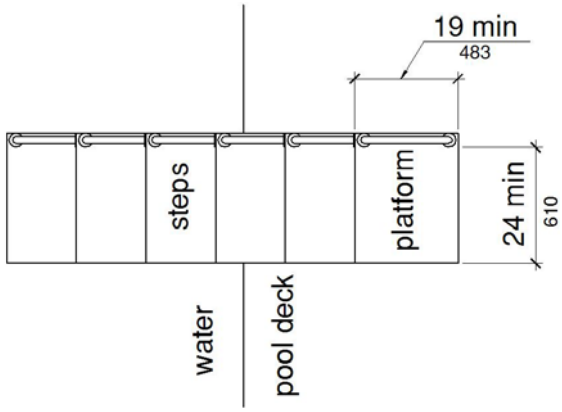

Figure *11B*-1009.5.1
Size of Transfer Platform

***11B*-1009.5.2 Transfer Space.** A transfer space of 60 inches (~~1525~~ *1524* mm) minimum by 60 inches (~~1525~~ *1524* mm) minimum with a slope not steeper than 1:48 shall be provided at the base of the transfer platform surface and shall be centered along a 24 inch (610 mm) minimum side of the transfer platform. The side of the transfer platform serving the transfer space shall be unobstructed.

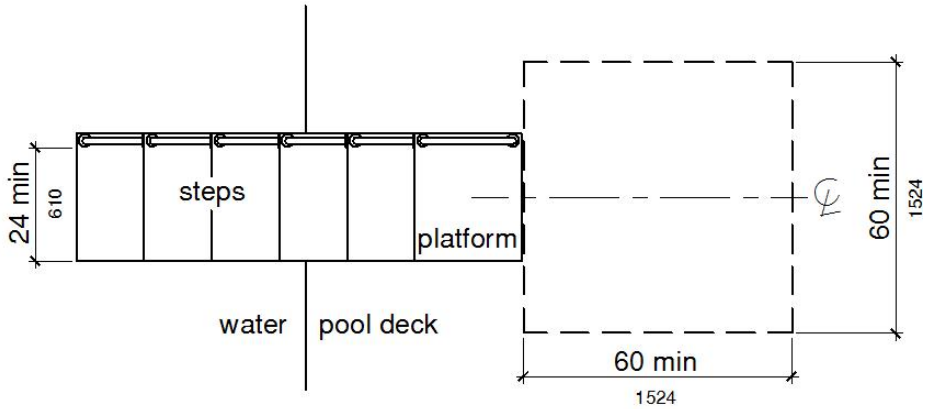

Figure *11B*-1009.5.2
Clear Deck Space at Transfer Platform

***11B*-1009.5.3 Height.** The height of the transfer platform shall comply with *11B*-1009.4.2.

***11B*-1009.5.4 Transfer Steps.** Transfer step height shall be 8 inches (~~205~~ *203* mm) maximum. The surface of the bottom tread shall extend to a water depth of 18 inches (~~455~~ *457* mm) minimum below the stationary water level.

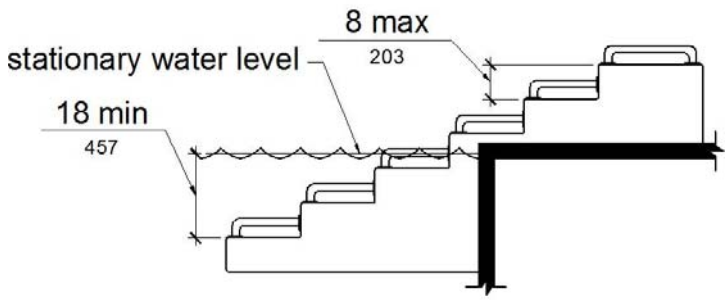

Figure *11B*-1009.5.4
Transfer Steps

***11B*-1009.5.5 Surface.** The surface of the transfer system shall not be sharp and shall have rounded edges.

***11B*-1009.5.6 Size.** Each transfer step shall have a tread clear depth of 14 inches (~~355~~ *356* mm) minimum and 17 inches (~~430~~ *432* mm) maximum and shall have a tread clear width of 24 inches (610 mm) minimum.

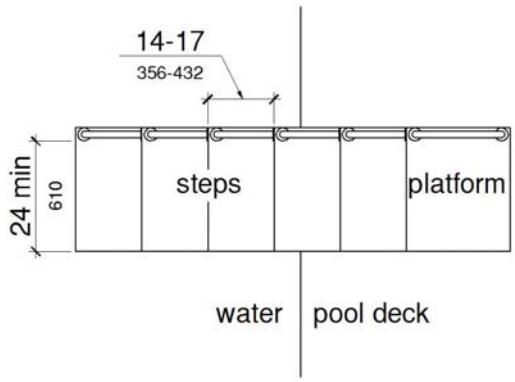

Figure *11B*-1009.5.6
Size of Transfer Steps

***11B*-1009.5.7 Grab Bars.** At least one grab bar on each transfer step and the transfer platform or a continuous grab bar serving each transfer step and the transfer platform shall be provided. Where a grab bar is provided on each step, the tops of gripping surfaces shall be 4 inches (~~100~~ *102* mm) minimum and 6 inches (~~150~~ *152* mm) maximum above each step and transfer platform. Where a continuous grab bar is provided, the top of the gripping surface shall be 4 inches (~~100~~ *102* mm) minimum and 6 inches (~~150~~ *152* mm) maximum above the step nosing and transfer platform. Grab bars shall comply with *11B*-609 and be located on at least one side of the transfer system. The grab bar located at the transfer platform shall not obstruct transfer.

EXCEPTION: Grab bars on transfer systems shall not be required to comply with *11B*-609.4.

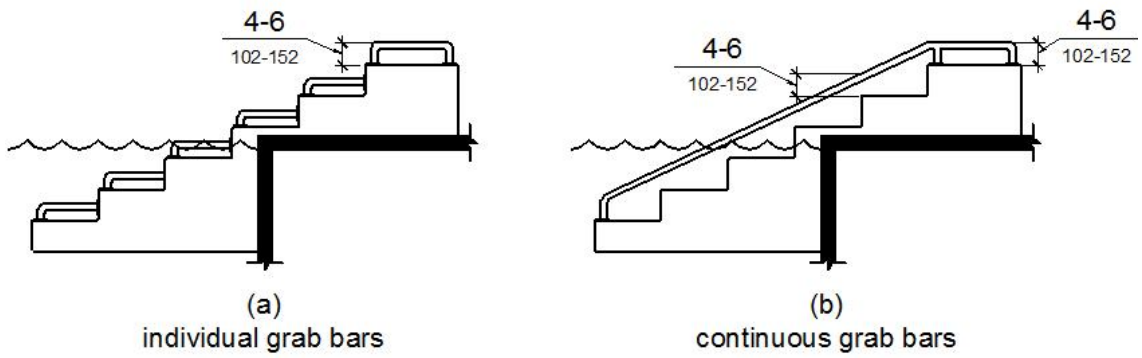

Figure *11B*-1009.5.7
Grab Bars

***11B*-1009.6 Pool Stairs.** Pool stairs shall comply with *11B*-1009.6.

***11B*-1009.6.1 Pool Stairs.** Pool stairs shall comply with *11B*-504.

EXCEPTION: Pool step riser heights shall not be required to be 4 inches (~~100~~ *102* mm) high minimum and 7 inches (~~180~~ *178* mm) high maximum provided that riser heights are uniform.

***11B*-1009.6.2 Handrails.** The width between handrails shall be 20 inches (~~510~~ *508* mm) minimum and 24 inches (610 mm) maximum. Handrail extensions required by *11B*-505.10.3 shall not be required on pool stairs.

1010 Shooting Facilities with Firing Positions

1010.1 Turning Space. A circular turning space 60 inches (~~1525~~ *1524* mm) diameter minimum with slopes not steeper than 1:48 shall be provided at shooting facilities with firing positions.

Notation
Authority: Government Code Section 4450. Reference(s): Government Code Section(s) 4450 through 4461, and 12955.1(c) and Health and Safety Code Section(s) 18949.1, 19952 through 19959.

CHAPTER 11C
STANDARDS FOR CARD READERS AT GASOLINE FUEL-DISPENSING FACILITIES

TOPIC 11C.0

CHAPTER 11C – MATRIX ADOPTION TABLE

Adopting Agency		DSA-AC
Adopt entire California Chapter		~~X~~
Adopt entire California Chapter as amended (amended Sections listed below)		
Adopt only those Sections that are listed below		
Chapter / Section	Codes	

TOPIC 11C.1

~~***CHAPTER 11C***~~
~~***STANDARDS FOR CARD READERS AT GASOLINE FUEL-DISPENSING FACILITIES***~~

~~***SECTION 1101C***~~
~~***CARD-READER DEVICES AT FUEL-DISPENSING EQUIPMENT***~~

~~*1101C.1 General. Notwithstanding other requirements in the California Building Code (CBC), only the requirements and additional definitions in this section shall apply to card-reading devices in motor vehicle fuel facilities, except that administrative requirements which are found in Chapter 1 - California Administration Division I still apply.*~~

~~*For purposes of this section, the following definitions shall apply:*~~

~~*ACCESSIBLE. See Chapter 11A, Section 1107A.1-A and Chapter 11B, Section 1102B.*~~

~~*ACCESSIBLE ELEMENT. See Chapter 11B, Section 1102B.*~~

~~*ALTERNATE CARD READER shall be defined in this section as functionally equal card reader and control directly attached to or an integral part of the fuel dispenser in addition to the primary card reader which is an integral part of the dispenser.*~~

~~*FREE-STANDING PEDESTAL is a card-reading device which controls one or more remote fuel dispensers that have no card reader as an integral part of the fuel dispenser.*~~

~~*GRADE (Adjacent Ground Elevation). See Chapter 2, Section 202.*~~

~~*INTERNATIONAL SYMBOL OF ACCESSIBILITY. See Chapter 11A, Section 1107A.9-I and Chapter 11B, Section 1102B.*~~

~~*LEVEL ACCESSIBLE AREA, for the purposes of this section, shall mean a slope of not more than one unit vertical in 50 units horizontal (2-percent slope) in front of the dispensing device; however, the slope may extend to one unit vertical in 20 units horizontal (5-percent slope) where the enforcing authority determines that, due to unusual site conditions, the 2-percent slope is not obtainable.*~~

~~*LEVEL AREA. See Chapter 11A, Section 1107A.12-L and Chapter 11B, Section 1102B.*~~

~~*RECOMMEND. See Chapter 2, Section 202.*~~

~~*TYPE OF MOTOR FUEL shall mean gasoline, diesel, compressed natural gas, methanol, electricity or ethanol.*~~

~~*SECTION 1102C*~~
~~*APPLICATION*~~

~~*This section shall apply to equipment located at the following facilities:*~~

1. ~~*New motor vehicle fuel facilities.*~~
2. ~~*Existing motor vehicle fuel facilities built before the effective date of this section when:*~~

   1.1. ~~*Remodeling or reconstruction includes removal and replacement of one or more islands and associated piping and tank(s); or*~~
   1.2. ~~*Remodeling includes reconstruction or removal and replacement of fuel islands at facilities that provide free-standing pedestal card readers.*~~

~~*SECTION 1103C*~~
~~*NUMBER OF ACCESSIBLE CARD-READING DEVICES REQUIRED*~~

~~*Where only one card-reading device is installed for use with any type of motor fuel, it shall meet the required features of this section. When more than one card-reading location is available for a specific type of motor fuel, a minimum of two for that type shall have the accessible features of this section.*~~

~~*SECTION 1104C*~~
~~*REQUIRED FEATURES*~~

~~*Card-reading devices at motor vehicle fuel facilities shall be accessible by complying with only the following:*~~

1. ~~*The highest operable part of each primary or alternate card reader shall be no more than 54 inches (1372 mm) measured from the base of the fuel dispenser. Where card readers are located on free-standing pedestals, the card-reading control function shall be no more than 54 inches (1372 mm) above an accessible level area which is served by an accessible route of travel.*~~

   ~~*Exception: If an enforcing agency requires that fuel dispensers or card-reading devices be placed in a manner where the card-reading device exceeds the requirements described herein, the provisions of Section 1104C do not apply. Any enforcing agency having jurisdiction over retail fueling facilities may not require islands or impose other regulations which conflict with this section, unless the agency documents and justifies the specific necessity for such a rule or ordinance and complies with the requirements of Health and Safety Code Section 18941.*~~

2. ~~*An accessible route of travel shall be provided to the base of all fuel dispensers required to meet the provisions of this section. Such fuel dispensers shall be mounted on the accessible level area.*~~

3. ~~*An accessible level area shall be provided which is minimally 30 inches by 48 inches (762 mm by 1219 mm) level and clear. This area shall be provided within 10 inches (254 mm) in plain view of the face of the controls and shall be unobstructed by any features, except pump nozzles and hoses, with the long side of this space parallel to and centered [plus or minus 9 inches (229 mm)] with the face of the card-reader controls. See Figures 11C-1 and 11C-2.*~~

~~*FIGURE 11C-1 CARD READERS MOUNTED IN FUEL DISPENSERS*~~
~~*FIGURE 11C-2 CARD READERS LOCATED ON FREE-STANDING PEDESTALS*~~

Notation
Authority: Government Code Section 4450. Reference(s): Government Code Section(s) 4450 through 4461, and 12955.1(c) and Health and Safety Code Section(s) 18949.1, 19952 through 19959.

CHAPTER 16
STRUCTURAL DESIGN

TOPIC 16.0

CHAPTER 16 – MATRIX ADOPTION TABLE

Adopting Agency		DSA-AC
Adopt entire Chapter		
Adopt entire Chapter as amended (amended Sections listed below)		
Adopt only those Sections that are listed below		X
Chapter / Section	Codes	
~~1607.7.2~~ 1607.8.2	CA	X

TOPIC 16.1

SECTION 1607
LIVE LOADS

1607.8 – Loads on handrails, guards, grab bars, *shower* seats*, dressing room bench seats* and vehicle barriers.

> ~~1607.7.2~~ 1607.8.2 Grab bars, shower seats and dressing room bench seats. Grab bars, shower seats and dressing room bench seat systems shall be designed to resist a single concentrated load of 250 pounds (1.11 kN) applied in any direction at any point on the grab bar or seat so as to produce the maximum load effects. *[DSA-AC] See Chapter 11A, Section 1127A.4, and Chapter 11B, Sections ~~1115B.7.2 and 1117B.8~~ 11B-609.8, 11B-610.4 and 11B-903.6, for grab bars, shower seats and dressing room bench seats, as applicable.*

Notation
Authority: Government Code Section 4450. Reference(s): Government Code Section(s) 4450 through 4461, and 12955.1(c) and Health and Safety Code Section(s) 18949.1, 19952 through 19959.

CHAPTER 16A
STRUCTURAL DESIGN

TOPIC 16A.0

CHAPTER 16A – MATRIX ADOPTION TABLE

Adopting Agency		DSA-AC
Adopt entire California Chapter		
Adopt entire California Chapter as amended (amended Sections listed below)		
Adopt only those Sections that are listed below		X
Chapter / Section	Codes	
~~1607A.7.2~~ 1607A.8.2	CA	X

TOPIC 16A.1

SECTION 1607A
LIVE LOADS

1607A.8 – Loads on handrails, guards, grab bars, *shower* seats*, dressing room bench seats* and vehicle barriers.

~~1607A.7.2~~ 1607A.8.2 Grab bars, shower seats and dressing room bench seats. Grab bars, shower seats and dressing room bench seat systems shall be designed to resist a single concentrated load of 250 pounds (1.11 kN) applied in any direction at any point on the grab bar or seat so as to produce the maximum load effects. *[DSA-AC] See Chapter 11A, Section 1127A.4, and Chapter 11B, Sections ~~1115B.7.2 and 1117B.8~~ 11B-609.8, 11B-610.4 and 11B-903.6, for grab bars, shower seas and dressing room bench seats, as applicable.*

Notation
Authority: Government Code Section 4450. Reference(s): Government Code Section(s) 4450 through 4461, and 12955.1(c) and Health and Safety Code Section(s) 18949.1, 19952 through 19959.

CHAPTER 24
GLASS AND GLAZING

TOPIC 24.0

CHAPTER 24 – MATRIX ADOPTION TABLE

Adopting Agency		DSA-AC
Adopt entire Chapter		
Adopt entire Chapter as amended (amended Sections listed below)		
Adopt only those Sections that are listed below		X
Chapter / Section	Codes	
~~2406~~	~~IBC~~	~~X~~

CHAPTER 30
ELEVATORS AND CONVEYING SYSTEMS

TOPIC 30.0

CHAPTER 30 – MATRIX ADOPTION TABLE

Adopting Agency		DSA-AC
Adopt entire Chapter		
Adopt entire Chapter as amended (amended Sections listed below)		
Adopt only those Sections that are listed below		X
Chapter / Section	Codes	
3001.1 w/ Exception	CA	X
3001.3	CA	X

TOPIC 30.1

SECTION 3001
GENERAL

3001.1 Scope. This chapter governs the design, construction, installation, alteration and repair of elevators and conveying systems and their components.

Exception: [DSA-AC] For accessibility requirements for platform ~~(wheelchair)~~ lifts and elevators, see California Code of Regulations, Title 8 and Title 24, Part 2, Sections 1124A, Sections 11B-206.6, 11B-206.7, 11B-407 and 11B-410 ~~and 1116B~~.

3001.3 Accessibility. Passenger elevators *and platform (wheelchair) lifts* required to be accessible ~~or to serve~~

~~as part of an *accessible means of egress* shall comply with Sections 1107 and 1109.7~~ by Chapters 11*A or 11B* shall conform to *Chapter 11A for applications listed in Section 108.2.1.2 regulated by the Department of Housing and Community Development or Chapter 11B for applications listed in Section 1.9.1 regulated by the Division of the State Architect—Access Compliance.*

Notation
Authority: Government Code Section 4450. Reference(s): Government Code Section(s) 4450 through 4461, and 12955.1(c) and Health and Safety Code Section(s) 18949.1, 19952 through 19959.

CHAPTER 31
SPECIAL CONSTRUCTION

TOPIC 31.0

CHAPTER 31 – MATRIX ADOPTION TABLE

Adopting Agency		DSA-AC
Adopt entire Chapter		
Adopt entire Chapter as amended (amended Sections listed below)		
Adopt only those Sections that are listed below		X
Chapter / Section	Codes	
3104.2, Exc 2	CA	X

TOPIC 31.1

SECTION 3104
PEDESTRIAN WALKWAYS AND TUNNELS

3104.2 Separate structures. Connected buildings shall be considered to be separate structures.

Exceptions:

1. Buildings on the same lot in accordance with Section 503.1.2 shall be considered a single structure.

2. ~~For purposes of calculating the number of Type B units required by Chapter 11, structurally connected buildings and buildings with multiple wings shall be considered one structure.~~ *[DSA-AC] For purposes of accessibility as required by Chapter 11A and Chapter 11B, structurally connected buildings, buildings connected by stairs, walkways, or roofs, and buildings with multiple wings shall be considered one structure.*

Notation
Authority: Government Code Section 4450. Reference(s): Government Code Section(s) 4450 through 4461, and 12955.1(c) and Health and Safety Code Section(s) 18949.1, 19952 through 19959.

CHAPTER 31B
PUBLIC SWIMMING POOLS

TOPIC 31B.0

CHAPTER 31B – MATRIX ADOPTION TABLE

Adopting Agency	DSA-AC
Adopt entire Chapter	
Adopt entire Chapter as amended (amended Sections listed below)	
Adopt only those Sections that are listed below	X

Chapter / Section	Codes	
3113.1 w/Exc 4 only	CA	X

TOPIC 31B.1

SECTION 3113B
POOL DECKS

3113B.1 General. A minimum continuous and unobstructed 4-foot wide (1219 mm) slip-resistant, nonabrasive deck area of concrete or like material shall be provided flush with the top of the pool shell wall extending completely around the pool and the deck area shall further extend 4 feet (1219 mm) on both sides and rear of any diving board or slide and their appurtenances. The deck width shall be measured from the poolside edge of the coping lip.

Exceptions:

1. *A deck at least 4 feet (1219 mm) in width shall extend around 50 percent or more of the perimeter of a spa pool. For spa pools that have their walls extending above the ground or floor level, the deck area requirement shall apply at the ground or floor level unless otherwise specified by the enforcing agency.*

2. *The deck width separating a spa pool from an adjacent pool shall not be less than 6 feet (1829 mm) wide.*

3. *The deck may be omitted from around a temporary training pool.*

4. *[DSA-AC] Any mechanism provided to assist persons with disabilities in gaining entry into the pool and in exiting from the pool shall comply with Chapter 11B, Section ~~1104B.4.3 Participation Areas~~ 11B-1009.*

CHAPTER 33
SAFEGUARDS DURING CONSTRUCTION

TOPIC 33.0

CHAPTER 33 – MATRIX ADOPTION TABLE

Adopting Agency		DSA-AC
Adopt entire Chapter		
Adopt entire Chapter as amended (amended Sections listed below)		
Adopt only those Sections that are listed below		X
Chapter / Section	Codes	
3306.2	CA	X

TOPIC 33.1

SECTION 3306
PROTECTION OF PEDESTRIANS

3306.2 Walkways. A walkway shall be provided for pedestrian travel in front of every construction and demolition site unless the applicable governing authority authorizes the sidewalk to be fenced or closed. Walkways shall be of sufficient width to accommodate the pedestrian traffic, but in no case shall they be less than 4 feet (1219 mm) in width. Walkways shall be provided with a durable walking surface. Walkways shall be *accessible* in accordance with ~~Chapter 11~~ *Chapter 11A or 11B as applicable,* and shall be designed to support all imposed loads and in no case shall the design live load be less than 150 pounds per square foot (psf) (7.2 kN/m2).

Notation
Authority: Government Code Section 4450. Reference(s): Government Code Section(s) 4450 through 4461, and 12955.1(c) and Health and Safety Code Section(s) 18949.1, 19952 through 19959.

CHAPTER 34
EXISTING STRUCTURES

TOPIC 34.0

CHAPTER 34 – MATRIX ADOPTION TABLE

Adopting Agency		DSA-AC
Adopt entire Chapter		
Adopt entire Chapter as amended (amended Sections listed below)		
Adopt only those Sections that are listed below		X
Chapter / Section	Codes	
3401.1 (last paragraph only)	CA	X
3409 (1st paragraph only)	CA	X

TOPIC 34.1

SECTION 3401
GENERAL

3401.1 Scope. The provisions of this chapter shall control the alteration, repair, addition and change of occupancy of existing buildings and structures.

Exception: Existing bleachers, grandstands and folding and telescopic seating shall comply with ICC 300.

[DSA-AC] For applications listed in Section 1.9.1 regulated by the Division of the State Architect--Access Compliance for accessibility requirements, see Chapter 11B, Section ~~1134B~~ 11B-202.

TOPIC 34.2

SECTION 3409
HISTORIC BUILDINGS

[DSA-AC] For applications listed in Section 1.9.1 regulated by the Division of the State Architect-Access Compliance for Qualified Historical Buildings, see California Code of Regulations, Title 24, Part 8 (California Historical Building Code).

Notation
Authority: Government Code Section 4450. Reference(s): Government Code Section(s) 4450 through 4461, and 12955.1(c) and Health and Safety Code Section(s) 18949.1, 19952 through 19959.

TOPIC 35.0

CHAPTER 35 – MATRIX ADOPTION TABLE

Adopting Agency		DSA-AC
Adopt entire Chapter		
Adopt entire Chapter as amended (amended Sections listed below)		
Adopt only those Sections that are listed below		X
Chapter / Section	Codes	
ANSI	CA	X
ASME	CA	X
BHMA	CA	X
CPSC	CA	X
NFPA	CA	X

TOPIC 35.1

CHAPTER 35
REFERENCED STANDARDS

This chapter lists the standards that are referenced in various sections of this document. The standards are listed herein by the promulgating agency of the standard, the standard identification, the effective date and title, and the section or sections of this document that reference the standard. The application of the referenced standards shall be as specified in *Chapter 1, Administration, Division 1, Sections 1.1.5 and 1.1.7, and in Chapter 1, Administration, Division II,* Section 102.4.

ANSI American National Standards Institute
25 West 43rd Street, Fourth Floor
New York, NY 10036

Standard Reference Number	Title	Referenced in code section number
S3.4.1	*American National Standard Specifications for Audible Emergency Evacuation Signal*	*907.5.2.1.3*
Z97.1-09	*Safety Glazing Materials Used in Buildings—Safety Performance Specifications and Methods of Test*	*2407.1, 2407.1.4.1*

ASME American Society of Mechanical Engineers
Three Park Avenue
New York, NY 10016-5990

Standard Reference Number	Title	Referenced in code section number
ASME/A17.1 2007/CSA B44-07	Safety Code for Elevators and Escalators – with A17.1a/CSA	

	B44a-08 Addenda ..... 907.3.3, 911.1.5, 1007.4, 11B-407.1, 11B-407.2.2, ... 11B-407.4.9, 11B-408.1, 11B-409.1, 11B-410.1, 11B-810.9, ... 1607.9.1, 3001.2, 3001.4, 3002.5, 3003.2, 3007.1, 3007.2, ... 3008.2, 3008.2.1, 3008.7.6, 3008.8.1, 3411.8.2
A18.1-2008	Safety Standard for Platform Lifts and Stairway Chairlifts 1109.8, 2702.2.6, 3411.8.3

BHMA Builders Hardware Manufacturers' Association
355 Lexington Avenue, 17th Floor
New York, NY 10017-6603

Standard Reference Number	Title	Referenced in code section number
A 156.10-2011	Power Operated Pedestrian Doors	11B-404.2.9, 11B-404.3, 1008.1.4.2
A 156.19-2007	Standard for Power Assist and Low Energy Operated Doors	11B-404.2.9, 11B-404.3, 11B-408.3.2.1, 11B-409.3.1, 1008.1.4.2

CPSC Consumer Product Safety Commission
4330 East West Highway
Bethesda, MD 20814-4408

Standard Reference Number	Title	Referenced in code section number
16CFR Part 1201(2002)	Safety Standard for Architectural Glazing Material	2406.2, Table 2406.2(1), ... 2406.3.1, 2407.1, 2407.1.4.1, 2408.2.1, 2408.3, 2409.1, 2409.2, 2409.3.1

NFPA National Fire Protection Association
1 Batterymarch Park
Quincy, MA 02169-7471

Standard Reference Number	Title	Referenced in code section number
72-10	National Fire Alarm Code*, as amended**.....	901.6, 903.4.1, 904.3.5, ... 907.2, 907.2.5, 907.2.11, 907.2.13.2, 907.3, 907.3.3, 907.3.4, ... 907.5.2.1.2, 907.5.2.2, 907.6, 907.6.1, 907.6.5, 907.7, 907.7.1, ... 907.7.2, 911.1.5, 3006.5, 3007.6

NFPA 72, Amended Sections as follows:

10.3.1 Equipment constructed and installed in conformity with this Code shall be listed for the purpose for which it is used. *Fire alarm Systems and components shall be California State Fire Marshal approved and listed in accordance with California Code of Regulations, Title 19, Division 1.*

10.3.3 All devices and appliances that receive their power from the initiating device circuit or signaling line circuit of a control unit shall be *California State Fire Marshal* listed for use with the control unit.

10.6.1 *Where approved by the authority having jurisdiction*, ECS priority signals when evaluated by stakeholders through risk analysis in accordance with 24.4.2.2 shall be permitted to take precedence over all other signals.

14.4.7.1 Testing. Household fire alarm systems shall be tested 'in *accordance with the manufacturer's published instructions'* according to the methods of Table 14.4.2.2.

17.15 Fire Extinguisher Monitoring Device. A fire extinguisher monitoring device shall indicate those conditions for a specific fire extinguisher required by *California Code of Regulations, Title 19, Division 1, Chapter 1, Section 574.2 (c) and California Fire Code to a fire alarm control unit.*

21.3.6 Smoke detectors shall not be installed in unsprinklered elevator hoistways unless they are installed to activate the elevator hoistway smoke relief equipment *or where required by Chapter 30 of the California Building Code.*

23.4.2.2 (4) Where the vertically run conductors are contained in a 2-hour rated cable assembly, or enclosed (installed) in a 2-hour rated enclosure or a listed circuit integrity (C.I.) cable, which meets or exceeds a 2-hour fire resistive rating.

23.8.5.1.2 *)* Where connected to a supervising station, fire alarm systems employing automatic fire detectors or waterflow detection devices shall include a manual fire alarm box to initiate a signal to the supervising station.

Exception: Fire alarm systems dedicated to elevator recall control, supervisory service *and fire sprinkler monitoring .*

23.8.5.4.1 Systems equipped with alarm verification features shall be permitted under the following conditions:

(1) The alarm verification feature is not initially enabled unless conditions or occupant activities that are expected to cause nuisance alarms are anticipated in the area that is protected by the smoke detectors. Enabling of the alarm verification feature shall be protected by password or limited access.

(2) A smoke detector that is continuously subjected to a smoke concentration above alarm threshold does not delay the system functions of Sections 10.6 through 10.13, 23.8.1.1, or 21.2.1 by more than *30 seconds*.

(3) Actuation of an alarm-initiating device other than a smoke detector causes the system functions of 4.4.3, 6.8.1.1, or 6.16.2.1 without additional delay.

(4) The current status of the alarm verification feature is shown on the record of completion *(see Figure 4.5.2.1, item 10)*.

(5) Operation of a patient room smoke detector in I-2 and R-2.1 Occupancies shall not include an alarm verification feature.

29.3.1 All devices, combinations of devices, and equipment to be installed in conformity with this chapter shall be approved or listed *by the California State Fire Marshal* the for the purposes for which they are intended.

29.5.2.1.1* Smoke and Heat Alarms. Unless exempted by applicable laws, codes, or standards, smoke or heat alarms used to provide a fire-warning function, and when two or more alarms are installed within a dwelling unit, suite of rooms, or similar area, shall be arranged so that the operation of any smoke or heat alarm causes all alarms within these locations to sound.

29.7.2.1 *The alarm verification feature shall not be used for household fire warning equipment.*

29.7.5.7.1 *The alarm verification feature shall not be used for household fire warning equipment.*