(begin strikeout) ~~CHAPTER~~ (end strikeout) (begin underline) ***DIVISION*** (end underline) 2: SCOPING REQUIREMENTS

11B-226 Dining Surfaces and Work Surfaces

***11B*-226.1 General.** Where dining surfaces are provided for the consumption of food or drink, at least 5 percent of the seating spaces and standing spaces at the dining surfaces shall comply with *11B*-902. In addition, where work surfaces are provided for use by other than employees, at least 5 percent shall comply with *11B*-902.

EXCEPTIONS: 1. Sales counters and service counters shall not be required to comply with *11B*-902.
2. Check writing surfaces provided at check-out aisles not required to comply with *11B*-904.3 shall not be required to comply with *11B*-902.

***11B*-226.2 Dispersion.** Dining surfaces and work surfaces required to comply with *11B*-902 shall be dispersed throughout the space or facility containing dining surfaces and work surfaces.

11B-227 Sales and Service

***11B*-227.1 General.** Where provided, check-out aisles, sales counters, service counters, food service lines, queues, and waiting lines shall comply with *11B*-227 and *11B*-904.

***11B*-227.2 Check-Out Aisles.** Where check-out aisles are provided, check-out aisles complying with *11B*-904.3 shall be provided in accordance with Table *11B*-227.2. Where check-out aisles serve different functions, check-out aisles complying with *11B*-904.3 shall be provided in accordance with Table *11B*-227.2 for each function. Where check-out aisles are dispersed throughout the building or facility, check-out aisles complying with *11B*-904.3 shall be dispersed. (begin underline) *When check-out aisles are open for customer use, a minimum of one accessible check-out aisle shall always be available. As check-out aisles are opened and closed based on fluctuating customer levels, the number of accessible check-out aisles available shall comply with Table 11B-227.2. When not all check-out aisles are accessible, accessible check-out aisles shall be identified by a sign complying with 11B-904.3.4.* (end underline)

EXCEPTION: (begin underline) *In existing buildings, where* (end underline) (begin strikeout) ~~Where~~ (end strikeout) the selling space is under 5000 square feet (465 m^2) no more than one check-out aisle complying with *11B*-904.3 shall be required.

Table *11B*-227.2 Check-Out Aisles

Number of Check-Out Aisles of Each Function	Minimum Number of Check-Out Aisles of Each Function Required to Comply with *11B*-904.3
1 to 4	1
5 to 8	2
9 to 15	3
16 and over	3, plus 20 percent of additional aisles

***11B*-227.2.1 Altered Check-Out Aisles.** Where check-out aisles are altered, at least one of each check-out aisle serving each function shall comply with *11B*-904.3 until the number of check-out aisles complies with *11B*-227.2.

***11B*-227.3 Counters.** Where provided, at least one of each type of sales counter and service counter shall comply with *11B*-904.4. Where counters are dispersed throughout the building or facility, counters complying with *11B*-904.4 also shall be dispersed.

***11B*-227.4 Food Service Lines.** Food service lines shall comply with *11B*-904.5. Where self-service shelves are provided, at least 50 percent, but no fewer than one, of each type provided shall comply with *11B*-308.

***11B*-227.5 Queues and Waiting Lines.** Queues and waiting lines servicing counters or check-out aisles required to comply with *11B*-904.3 or *11B*-904.4 shall comply with *11B*-403.

***11B*-231 Judicial Facilities**

***11B*-231.4 Visiting Areas. …**

***11B*-231.4.2 Partitions.** Where solid partitions or security glazing separate visitors from detainees at least one of each type of cubicle or counter partition shall comply with *11B*-904.6.

***11B*-232 Detention Facilities and Correctional Facilities**

***11B*-232.5 Visiting Areas. …**

***11B*-232.5.2 Partitions.** Where solid partitions or security glazing separate visitors from detainees or inmates at least one of each type of cubicle or counter partition shall comply with *11B*-904.6.

(begin strikeout) ***~~CHAPTER~~*** (end strikeout) (begin underline) ***DIVISION*** (end underline) 9: BUILT-IN ELEMENTS

11B-901 General

***11B*-901.1 Scope.** The provisions of (begin strikeout) ~~Chapter~~ (end strikeout) (begin underline) *Division* (end underline) 9 shall apply where required by (begin strikeout) ~~Chapter~~ (end strikeout) (begin underline) *Division* (end underline) 2 or where referenced by a requirement in this (begin strikeout) ~~document~~ (end strikeout) (begin underline) *chapter* (end underline).

11B-902 Dining Surfaces and Work Surfaces

***11B*-902.1 General.** Dining surfaces and work surfaces shall comply with *11B*-902.2 and *11B*-902.3.

> **EXCEPTION:** Dining surfaces and work surfaces for children's use shall be permitted to comply with *11B*-902.4.

***11B*-902.2 Clear Floor or Ground Space.** A clear floor space complying with *11B*-305 positioned for a forward approach shall be provided. Knee and toe clearance complying with *11B*-306 shall be provided.

***11B*-902.3 Height.** The tops of dining surfaces and work surfaces shall be 28 inches (710 mm) minimum and 34 inches (865 mm) maximum above the finish floor or ground.

***11B*-902.4 Dining Surfaces and Work Surfaces for Children's Use.** Accessible dining surfaces and work surfaces for children's use shall comply with *11B*-902.4.

> **EXCEPTION:** Dining surfaces and work surfaces that are used primarily by children 5 years and younger shall not be required to comply with *11B*-902.4 where a clear floor or ground space complying with *11B*-305 positioned for a parallel approach is provided.
>
> ***11B*-902.4.1 Clear Floor or Ground Space.** A clear floor space complying with *11B*-305 positioned for forward approach shall be provided. Knee and toe clearance complying with *11B*-306 shall be provided, except that knee clearance 24 inches (610 mm) minimum above the finish floor or ground shall be permitted.
>
> ***11B*-902.4.2 Height.** The tops of tables and counters shall be 26 inches (660 mm) minimum and 30 inches (760 mm) maximum above the finish floor or ground.

11B-903 Benches

***11B*-903.1 General.** Benches shall comply with *11B*-903.

***11B*-903.2 Clear Floor or Ground Space.** Clear floor or ground space complying with *11B*-305 shall be provided and shall be positioned at the end of the bench seat and parallel to the short axis of the bench.

***11B*-903.3 Size.** Benches shall have seats that are (begin strikeout) ~~42~~ (end strikeout) (begin underline) *48* (end underline) inches ((begin strikeout) ~~1065~~ (end strikeout) (begin underline) *1219* (end underline) mm) long minimum and 20 inches (510 mm) deep minimum and 24 inches (610 mm) deep maximum.

11B*-903.4** (begin strikeout) **~~Back Support~~** (end strikeout) (begin underline) ***Installation (end underline)**.** (begin strikeout) ~~The bench shall provide for back support or shall be affixed to a wall.~~ (end strikeout) (begin underline) *Benches shall be installed in a manner that provides attachment to either a wall or the floor.*

11B-903.4.1 Wall. *Where affixed to a wall, benches shall be attached along the longer dimension.*

11B-903.4.2 Floor. *Where attached to the floor, benches shall provide for back support.* (end underline) Back support shall be (begin strikeout) ~~42~~ (end strikeout) (begin underline) *48* (end underline) inches ((begin strikeout) ~~1065~~ (end strikeout) (begin underline) *1219* (end underline) mm) long minimum and shall extend from a point 2 inches (51 mm) maximum above the seat surface to a point 18 inches (455 mm) minimum above the seat surface. Back support shall be 2½ inches (64 mm) maximum from the rear edge of the seat measured horizontally.

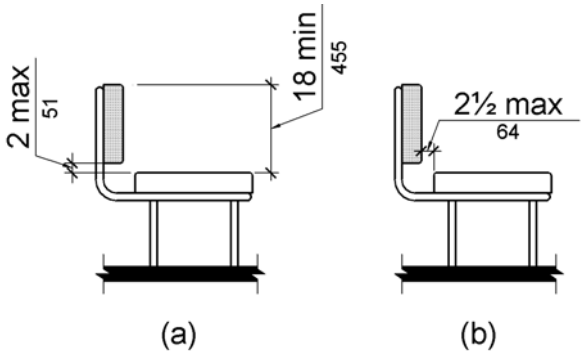

Figure *11B*-903.4
Bench Back Support

***11B*-903.5 Height.** The top of the bench seat surface shall be 17 inches (430 mm) minimum and 19 inches (485 mm) maximum above the finish floor or ground.

***11B*-903.6 Structural Strength.** Allowable stresses shall not be exceeded for materials used when a vertical or horizontal force of 250 pounds (1112 N) is applied at any point on the seat, fastener, mounting device, or supporting structure.

***11B*-903.7 Wet Locations.** Where installed in wet locations, the surface of the seat shall be slip resistant and shall not accumulate water.

***11B*-904 Check-Out Aisles and Sales and Service Counters**

***11B*-904.1 General.** Check-out aisles and sales and service counters shall comply with the applicable requirements of *11B*-904.

***11B*-904.2 Approach.** All portions of counters required to comply with *11B*-904 shall be located adjacent to a walking surface complying with *11B*-403.

***11B*-904.3 Check-Out Aisles.** Check-out aisles shall comply with *11B*-904.3.

***11B*-904.3.1 Aisle.** Aisles shall comply with *11B*-403.

***11B*-904.3.2 Counter.** The counter surface height shall be 38 inches (965 mm) maximum above the finish floor or ground. The top of the counter edge protection shall be 2 inches (51 mm) maximum above the top of the counter surface on the aisle side of the check-out counter.

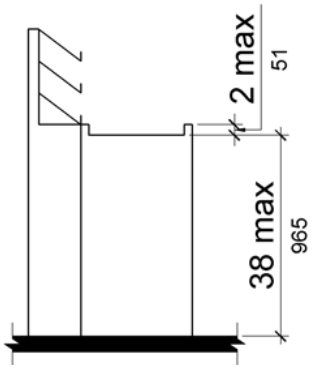

Figure *11B*-904.3.2
Check-Out Aisle Counters

***11B*-904.3.3 Check Writing Surfaces.** Where provided, check writing surfaces shall comply with *11B*-902.3.

(begin underline) ***11B-904.3.4 Identification Sign.*** *When not all check-out aisles are accessible, accessible check-out aisles shall be identified by a sign clearly visible to a person in a wheelchair displaying the International Symbol of Accessibility complying with 11B-703.7.2.1. The sign shall be a minimum of 4 inches by 4 inches (102 mm by 102 mm).* (end underline)

***11B*-904.4 Sales and Service Counters.** Sales counters and service counters shall comply with *11B*-904.4.1 or *11B*-904.4.2. The accessible portion of the counter top shall extend the same depth as the sales or service counter top.

EXCEPTION: In alterations, when the provision of a counter complying with *11B*-904.4 would result in a reduction of the number of existing counters at work stations or a reduction of the number of existing mail boxes, the counter shall be permitted to have a portion which is 24 inches (610 mm) long minimum complying with *11B*-904.4.1 provided that the required clear floor or ground space is centered on the accessible length of the counter.

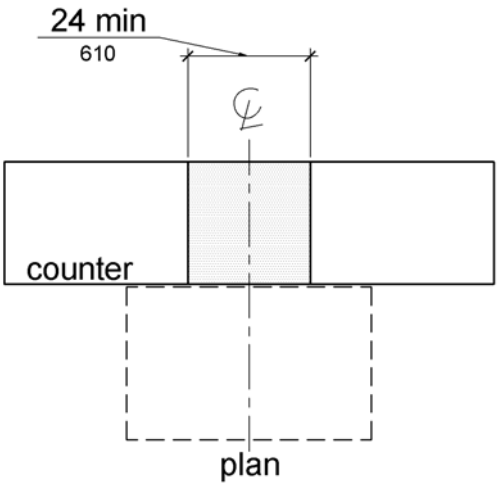

Figure *11B*-904.4 (Exception)
Alteration of Sales and Service Counters

***11B*-904.4.1 Parallel Approach.** A portion of the counter surface that is 36 inches (915 mm) long minimum and (begin strikeout) ~~36~~ (end strikeout) (begin underline) *34* (end underline) inches ((begin strikeout) ~~915~~ (end strikeout) (begin underline) *864* (end underline) mm) high maximum above the finish floor shall be provided. A clear floor or ground space complying with *11B*-305 shall be positioned for a parallel approach adjacent to the 36 inch (915 mm) minimum length of counter.

EXCEPTION: Where the provided counter surface is less than 36 inches (915 mm) long, the entire counter surface shall be (begin strikeout) ~~36~~ (end strikeout) (begin underline) *34* (end underline) inches ((begin strikeout) ~~915~~ (end strikeout) (begin underline) *864* (end underline) mm) high maximum above the finish floor.

***11B*-904.4.2 Forward Approach.** A portion of the counter surface that is (begin strikeout) ~~30~~ (end strikeout) (begin underline) *36* (end underline) inches ((begin strikeout) ~~760~~ (end strikeout) (begin underline) *914* (end underline) mm) long minimum and (begin strikeout) ~~36~~ (end strikeout) (begin underline) *34* (end underline) inches ((begin strikeout) ~~915~~ (end strikeout) (begin underline) *864* (end underline) mm) high maximum shall be provided. Knee and toe space complying with *11B*-306 shall be provided under the counter. A clear floor or ground space complying with *11B*-305 shall be positioned for a forward approach to the counter.

***11B*-904.5 Food Service Lines.** Counters in food service lines shall comply with *11B*-904.5.

***11B*-904.5.1 Self-Service Shelves and Dispensing Devices.** Self-service shelves and dispensing devices for tableware, dishware, condiments, food and beverages shall comply with *11B*-308.

***11B*-904.5.2 Tray Slides.** The tops of tray slides shall be 28 inches (710 mm) minimum and 34 inches (865 mm) maximum above the finish floor or ground.

***11B*-904.6 Security Glazing.** Where counters or teller windows have security glazing to separate personnel from the public, a method to facilitate voice communication shall be provided. Telephone handset devices, if provided, shall comply with *11B*-704.3.