STATE OF CALIFORNIA
Department of General Services - Office of Procurement
PURCHASE ORDER

Form GSOP 1-PIN (04/98)

Purchase Order No.	Rev.	Date
62064		6/30/2008

Supplier No.	Solicitation No.	Delivery Date	FOB Point	Invoice Terms
763390	56775	210 Days ARO	Destination	

COALINGA MOTORS INC
625 E ELM ST
COALINGA, CA 93210-1514
Attn: BILL KEMERY, X297

Phone: 916-421-4700

Ship To: DEPT OF TRANSPORTATION
EQUIPMENT RECEIVING
(VARIOUS LOCATIONS)

Charge To: CALTRANS-ACCTG/OFC B-15
EQUIPMENT RECEIVING
PO BOX 160048
SACRAMENTO, CA 95816

Agency Billing	Agency Purchase Estimate	Purchase Estimate	Revision
60063	32-12-5367	67087	3

Agency Contact	Phone	Date Received
BILL MUELLER	916-227-9616	

Item No.	Quantity	Unit	Commodity Code	Description	Unit Price	Extension

This purchase order is being awarded on July 2, 2008 pursuant to Government Code Section 13332.17. Any encumbrances made pursuant to this purchase order shall be construed to have been made on the last day of the preceding fiscal year.

The General Provisions for Non-IT commodities are hereby incorporated by reference. These General Procisions can be obtained by phoning (916) 375-4400 or by accessing our website at:

www.documents.dgs.ca.gov/pd/modellang/GPnonIT0407.pdf

THE FOLLOWING INFORMATION IS PROVIDED FOR AGENCY USE ONLY:

Prime Contractor: NS
Small Business Subcontractor Total: $461,674.59

1	1	EA	2320-999-0007-8	TRUCK (AS DESCRIBED) 96 inch Service and Repair body and equipment mounted on a 9,200 GVW minimum conventional truck cab and chassis meeting the requirements of the attached Specification No. 00830-127-081.	34,800.0000	34,800.00

To inlcude the following options:
Option No. 1: Telescopic Steel Cover
Option No. 5: 1800 Watt Inverter
Option No. 7: Cone Holders
Option No. 8: Arrow Stick
Option No. 13: Power Door Locks and Windows

Maint. Class	ID. No.	EBR No.
00830	7005073	7005073/23

Ship To Caltrans Shop 23:
981 North Beale Rd. Marysville, Ca 95901

2	1	EA	2320-999-0007-8	TRUCK (AS DESCRIBED) 96 inch Service and Repair body and equipment mounted on a 9,200 GVW minimum conventional truck cab and chassis meeting the requirements of the	30,952.0000	30,952.00

Sales and/or use tax to be extra unless noted above

Buyer	Phone	BOC Number
SHANNON KELLER	916-375-4606	

STATE OF CALIFORNIA
Department of General Services - Office of Procurement

PURCHASE ORDER CONTINUATION

Form GSOP 2-PIN (04/98)

Purchase Order No.	Revision	Date	Supplier No.	Supplier Name
62064		6/30/2008	763390	COALINGA MOTORS INC

Item No.	Quantity	Unit	Commodity Code	Description	Unit Price	Extension
				attached Specification No. 00830-127-081. To inlcude the following options: Option No. 4: Push Bumper Option No. 8: Arrow Stick Option No. 13: Power Door Locks and Windows Maint. Class: 00830 ID. No.: 7005074 EBR No.: 7005074/23 Ship To Caltrans Shop 23: 981 North Beale Rd. Marysville, Ca 95901		
3	1	EA	2320-999-0007-8	TRUCK (AS DESCRIBED) 96 inch Service and Repair body and equipment mounted on a 9,200 GVW minimum conventional truck cab and chassis meeting the requirements of the attached Specification No. 00830-127-081. To inlcude the following options: Option No. 4: Push Bumper Option No. 5: 1800 Watt Inverter Option No. 8: Arrow Stick Option No. 13: Power Door Locks and Windows Maint. Class: 00830 ID. No.: 7005075 EBR No.: 7005075/23 Ship To Caltrans Shop 23: 981 North Beale Rd. Marysville, Ca 95901	34,231.0000	34,231.00
4	1	EA	2320-999-0007-8	TRUCK (AS DESCRIBED) 96 inch Service and Repair body and equipment mounted on a 9,200 GVW minimum conventional truck cab and chassis meeting the requirements of the attached Specification No. 00830-127-081. To inlcude the following options: Option No. 7: Cone Holders Option No. 8: Arrow Stick Maint. Class: 00830 ID. No.: 7005557 EBR No.: 7005557/24 Ship To Caltrans Shop 24: 1993 Marina Boulevard, San Leandro, Ca 94577	29,961.0000	29,961.00
5	1	EA	2320-999-0007-8	TRUCK (AS DESCRIBED) 96 inch Service and Repair body and equipment mounted on a 9,200 GVW minimum conventional truck cab and chassis meeting the requirements of the attached Specification No. 00830-127-081. To inlcude the following options: Option No. 4: Push Bumper Option No. 5: 1800 Watt Inverter Option No. 8: Arrow Stick	33,466.0000	33,466.00

STATE OF CALIFORNIA
Department of General Services - Office of Procurement

PURCHASE ORDER CONTINUATION

Form GSOP 2-PIN (04/98)

Purchase Order No.	*Revision*	*Date*	*Supplier No.*	*Supplier Name*
62064		6/30/2008	763390	COALINGA MOTORS INC

Item No.	*Quantity*	*Unit*	*Commodity Code*	*Description*	*Unit Price*	*Extension*
				Maint. Class 00830 ID. No. 7005247 EBR No. 7005247/26 Ship To Caltrans Shop 26: 1385 North West Ave., Fresno, Ca 93778		
6	1	EA	2320-999-0007-8	TRUCK (AS DESCRIBED) 96 inch Service and Repair body and equipment mounted on a 9,200 GVW minimum conventional truck cab and chassis meeting the requirements of the attached Specification No. 00830-127-081. To inlcude the following options: Option No. 1: Telescopic Steel Cover Option No. 5: 1800 Watt Inverter Option No. 7: Cone Holders Option No. 8: Arrow Stick Maint. Class 00830 ID. No. 7000094 EBR No. 7000094/27 Ship To Caltrans Shop 27: 5421 Vineland Ave., North Hollywood, Ca 91601	33,635.0000	33,635.00
7	1	EA	2320-999-0007-8	TRUCK (AS DESCRIBED) 96 inch Service and Repair body and equipment mounted on a 9,200 GVW minimum conventional truck cab and chassis meeting the requirements of the attached Specification No. 00830-127-081. To inlcude the following options: Option No. 1: Telescopic Steel Cover Option No. 5: 1800 Watt Inverter Option No. 7: Cone Holders Option No. 8: Arrow Stick Maint. Class 00830 ID. No. 7001593 EBR No. 7001593/27 Ship To Caltrans Shop 27: 5421 Vineland Ave., North Hollywood, Ca 91601	33,635.0000	33,635.00
8	1	EA	2320-999-0007-8	TRUCK (AS DESCRIBED) 96 inch Service and Repair body and equipment mounted on a 9,200 GVW minimum conventional truck cab and chassis meeting the requirements of the attached Specification No. 00830-127-081. To inlcude the following options: Option No. 1: Telescopic Steel Cover Option No. 3: Cone Carrier Option No. 4: Push Bumper Option No. 5: 1800 Watt Inverter Option No. 7: Cone Holders Option No. 8: Arrow Stick	34,664.0000	34,664.00

STATE OF CALIFORNIA
Department of General Services - Office of Procurement

PURCHASE ORDER CONTINUATION

Form GSOP 2-PIN (04/98)

Purchase Order No.	Revision	Date	Supplier No.	Supplier Name
62064		6/30/2008	763390	COALINGA MOTORS INC

Item No.	Quantity	Unit	Commodity Code	Description	Unit Price	Extension
				Maint. Class 00830 ID. No. 7001594 EBR No. 7001594/27 Ship To Caltrans Shop 27: 5421 Vineland Ave., North Hollywood, Ca 91601		
9	1	EA	2320-999-0007-8	TRUCK (AS DESCRIBED) 96 inch Service and Repair body and equipment mounted on a 9,200 GVW minimum conventional truck cab and chassis meeting the requirements of the attached Specification No. 00830-127-081. To inlcude the following options: Option No. 1: Telescopic Steel Cover Option No. 5: 1800 Watt Inverter Option No. 7: Cone Holders Option No. 8: Arrow Stick Maint. Class 00830 ID. No. 7000300 EBR No. 7000300/27 Ship To Caltrans Shop 27: 5421 Vineland Ave., North Hollywood, Ca 91601	33,635.0000	33,635.00
10	1	EA	2320-999-0007-8	TRUCK (AS DESCRIBED) 96 inch Service and Repair body and equipment mounted on a 9,200 GVW minimum conventional truck cab and chassis meeting the requirements of the attached Specification No. 00830-127-081. To inlcude the following options: Option No. 3: Cone Carrier Option No. 5: 1800 Watt Inverter Option No. 7: Cone Holders Option No. 8: Arrow Stick Maint. Class 00830 ID. No. 7000442 EBR No. 7000442/27 Ship To Caltrans Shop 27: 5421 Vineland Ave., North Hollywood, Ca 91601	33,322.0000	33,322.00
11	1	EA	2320-999-0007-8	TRUCK (AS DESCRIBED) 96 inch Service and Repair body and equipment mounted on a 9,200 GVW minimum conventional truck cab and chassis meeting the requirements of the attached Specification No. 00830-127-081. To inlcude the following options: Option No. 1: Telescopic Steel Cover Option No. 3: Cone Carrier Option No. 4: Push Bumper Option No. 5: 1800 Watt Inverter Option No. 7: Cone Holders Option No. 8: Arrow Stick Option No. 9: Crane 1,000-lb. Capacity	35,379.0000	35,379.00

STATE OF CALIFORNIA
Department of General Services - Office of Procurement

PURCHASE ORDER CONTINUATION

Form GSOP 2-PIN (04/98)

Purchase Order No.	*Revision*	*Date*	*Supplier No.*	*Supplier Name*
62064		6/30/2008	763390	COALINGA MOTORS INC

Item No.	*Quantity*	*Unit*	*Commodity Code*	*Description*	*Unit Price*	*Extension*
				Maint. Class 00830 ID. No. 7000446 EBR No. 7000446/27 Ship To Caltrans Shop 27: 5421 Vineland Ave., North Hollywood, Ca 91601		
12	1	EA	2320-999-0007-8	TRUCK (AS DESCRIBED) 96 inch Service and Repair body and equipment mounted on a 9,200 GVW minimum conventional truck cab and chassis meeting the requirements of the attached Specification No. 00830-127-081. To inlcude the following options: Option No. 1: Telescopic Steel Cover Option No. 5: 1800 Watt Inverter Option No. 7: Cone Holders Option No. 8: Arrow Stick Maint. Class 00830 ID. No. 7000449 EBR No. 7000449/27 Ship To Caltrans Shop 27: 5421 Vineland Ave., North Hollywood, Ca 91601	33,635.0000	33,635.00
13	1	EA	2320-999-0007-8	TRUCK (AS DESCRIBED) 96 inch Service and Repair body and equipment mounted on a 9,200 GVW minimum conventional truck cab and chassis meeting the requirements of the attached Specification No. 00830-127-081. To inlcude the following options: Option No. 1: Telescopic Steel Cover Option No. 3: Cone Carrier Option No. 4: Push Bumper Option No. 5: 1800 Watt Inverter Option No. 7: Cone Holders Option No. 8: Arrow Stick Maint. Class 00830 ID. No. 7001596 EBR No. 7001596/27 Ship To Caltrans Shop 27: 5421 Vineland Ave., North Hollywood, Ca 91601	34,663.0000	34,663.00
14	1	EA	2320-999-0007-8	TRUCK (AS DESCRIBED) 96 inch Service and Repair body and equipment mounted on a 9,200 GVW minimum conventional truck cab and chassis meeting the requirements of the attached Specification No. 00830-127-081. To inlcude the following options: Option No. 3: Cone Carrier Option No. 5: 1800 Watt Inverter Option No. 8: Arrow Stick Maint. Class 00830 ID. No. 7001603 EBR No. 7001603/27	33,000.0000	33,000.00

STATE OF CALIFORNIA
Department of General Services - Office of Procurement

PURCHASE ORDER CONTINUATION

Form GSOP 2-PIN (04/98)

Purchase Order No.	*Revision*	*Date*	*Supplier No.*	*Supplier Name*
62064		6/30/2008	763390	COALINGA MOTORS INC

Item No.	*Quantity*	*Unit*	*Commodity Code*	*Description*	*Unit Price*	*Extension*
				Ship To Caltrans Shop 27: 5421 Vineland Ave., North Hollywood, Ca 91601		
15	1	EA	2320-999-0007-8	TRUCK (AS DESCRIBED) 96 inch Service and Repair body and equipment mounted on a 9,200 GVW minimum conventional truck cab and chassis meeting the requirements of the attached Specification No. 00830-127-081. To inlcude the following options: Option No. 1: Telescopic Steel Cover Option No. 5: 1800 Watt Inverter Option No. 7: Cone Holders Option No. 8: Arrow Stick Maint. Class: 00830 ID. No.: 7005389 EBR No.: 7005389/27 Ship To Caltrans Shop 27: 5421 Vineland Ave., North Hollywood, Ca 91601	33,385.0000	33,385.00
16	1	EA	2320-999-0007-8	TRUCK (AS DESCRIBED) 96 inch Service and Repair body and equipment mounted on a 9,200 GVW minimum conventional truck cab and chassis meeting the requirements of the attached Specification No. 00830-127-081. To inlcude the following options: Option No. 3: Cone Carrier Option No. 5: 1800 Watt Inverter Option No. 7: Cone Holders Option No. 8: Arrow Stick Maint. Class: 00830 ID. No.: 7004850 EBR No.: 7004850/31 Ship To Caltrans Shop 31: 7179 Opportunity Road., San Diego, Ca 92111	33,635.0000	33,635.00
17	1	EA	2320-999-0007-8	TRUCK (AS DESCRIBED) 96 inch Service and Repair body and equipment mounted on a 9,200 GVW minimum conventional truck cab and chassis meeting the requirements of the attached Specification No. 00830-127-081. To inlcude the following options: Option No. 4: Push Bumper Option No. 5: 1800 Watt Inverter Option No. 8: Arrow Stick Maint. Class: 00830 ID. No.: 7004863 EBR No.: 7004863/31 Ship To Caltrans Shop 31: 7179 Opportunity Road., San Diego, Ca 92111	33,166.0000	33,166.00

STATE OF CALIFORNIA
Department of General Services - Office of Procurement

PURCHASE ORDER CONTINUATION

Form GSOP 2-PIN (04/98)

Purchase Order No.	*Revision*	*Date*	*Supplier No.*	*Supplier Name*
62064		6/30/2008	763390	COALINGA MOTORS INC

Item No.	*Quantity*	*Unit*	*Commodity Code*	*Description*	*Unit Price*	*Extension*
18	1	EA	2320-999-0007-8	TRUCK (AS DESCRIBED) 96 inch Service and Repair body and equipment mounted on a 9,200 GVW minimum conventional truck cab and chassis meeting the requirements of the attached Specification No. 00830-127-081. To inlcude the following options: Option No. 5: 1800 Watt Inverter Option No. 7: Cone Holders Option No. 8: Arrow Stick Maint. Class: 00830 ID. No.: 7004877 EBR No.: 7004877/31 Ship To Caltrans Shop 31: 7179 Opportunity Road., San Diego, Ca 92111	32,940.0000	32,940.00
19	1	EA	2320-999-0007-8	TRUCK (AS DESCRIBED) 96 inch Service and Repair body and equipment mounted on a 9,200 GVW minimum conventional truck cab and chassis meeting the requirements of the attached Specification No. 00830-127-081. To inlcude the following options: Option No. 3: Cone Carrier Option No. 5: 1800 Watt Inverter Option No. 7: Cone Holders Option No. 8: Arrow Stick Maint. Class: 00830 ID. No.: 7004880 EBR No.: 7004880/31 Ship To Caltrans Shop 31: 7179 Opportunity Road., San Diego, Ca 92111	33,422.0000	33,422.00
20	1	EA	2320-999-0007-8	TRUCK (AS DESCRIBED) 96 inch Service and Repair body and equipment mounted on a 9,200 GVW minimum conventional truck cab and chassis meeting the requirements of the attached Specification No. 00830-127-081. To inlcude the following options: Option No. 1: Telescopic Steel Cover Option No. 5: 1800 Watt Inverter Option No. 8: Arrow Stick Maint. Class: 00830 ID. No.: 7004739 EBR No.: 7004739/34 Ship To Caltrans Shop 34. 691 South Tustin Street, Orange,Ca 92866	33,290.0000	33,290.00
21	1	EA	2320-999-0007-8	TRUCK (AS DESCRIBED) 96 inch Service and Repair body and equipment mounted on a 9,200 GVW minimum conventional truck cab and chassis meeting the requirements of the attached Specification No. 00830-127-081.	32,815.0000	32,815.00

STATE OF CALIFORNIA
Department of General Services - Office of Procurement

PURCHASE ORDER CONTINUATION

Form GSOP 2-PIN (04/98)

Purchase Order No.	Revision	Date	Supplier No.	Supplier Name
62064		6/30/2008	763390	COALINGA MOTORS INC

Item No.	Quantity	Unit	Commodity Code	Description	Unit Price	Extension
				To inlcude the following options: Option No. 5: 1800 Watt Inverter Option No. 7: Cone Holders Option No. 8: Arrow Stick Maint. Class: 00830 ID. No.: 7004747 EBR No.: 7004747/34 Ship To Caltrans Shop 34: 691 South Tustin St., Orange, Ca 92866		
22	1	EA	2320-999-0007-8	TRUCK (AS DESCRIBED) 96 inch Service and Repair body and equipment mounted on a 9,200 GVW minimum conventional truck cab and chassis meeting the requirements of the attached Specification No. 00830-127-081. To inlcude the following options: Option No. 7: Cone Holders Option No. 8: Arrow Stick Option No.10: Survey Body Maint. Class: 00835 ID. No.: 7005627 EBR No.: 7005627/25 Ship To Caltrans Shop 25: 66 Madonna Rd., San Luis Obisbo, Ca 93401	32,936.0000	32,936.00
23	1	EA	2320-999-0007-8	TRUCK (AS DESCRIBED) 96 inch Service and Repair body and equipment mounted on a 9,200 GVW minimum conventional truck cab and chassis meeting the requirements of the attached Specification No. 00830-127-081. To inlcude the following options: Option No. 1: Telescopic Steel Cover Option No. 3: Cone Carrier Option No. 8: Arrow Stick Option No.13: Power Door Locks and Windows Option No.15: Crew Cab Maint. Class: 00844 ID. No.: 7004781 EBR No.: 7004781/22 Ship To Caltrans Shop 22: 1430 George Dr., Redding, Ca 96003	35,088.0000	35,088.00
24	1	EA	2320-999-0007-8	TRUCK (AS DESCRIBED) 96 inch Service and Repair body and equipment mounted on a 9,200 GVW minimum conventional truck cab and chassis meeting the requirements of the attached Specification No. 00830-127-081. To inlcude the following options: Option No. 1: Telescopic Steel Cover Option No. 4: Push Bumper	33,850.0000	33,850.00

STATE OF CALIFORNIA
Department of General Services - Office of Procurement

PURCHASE ORDER CONTINUATION

Form GSOP 2-PIN (04/98)

Purchase Order No.	Revision	Date	Supplier No.	Supplier Name
62064		6/30/2008	763390	COALINGA MOTORS INC

Item No.	Quantity	Unit	Commodity Code	Description	Unit Price	Extension
				Option No.11: (DELETE) - Light & Antenna Rack Option No.12: Heated Mirrors Option No.13: Power Door Locks and Windows Option No.15: Crew Cab Maint. Class 00844 ID. No. 7004783 EBR No. 7004783/22 Ship To Caltrans Shop 32: 1920 35th St., Sacramento,Ca 95816		
25	1	EA	2320-999-0007-8	TRUCK (AS DESCRIBED) 96 inch Service and Repair body and equipment mounted on a 9,200 GVW minimum conventional truck cab and chassis meeting the requirements of the attached Specification No. 00830-127-081. To inlcude the following options: Option No. 4: Push Bumper Option No.15: Crew Cab Maint. Class 00844 ID. No. 7005248 EBR No. 7005248/26 Ship To Caltrans Shop 26: 1385 North West Ave., Fresno, Ca 93778	32,812.0000	32,812.00
26	1	EA	2320-999-0007-8	TRUCK (AS DESCRIBED) 96 inch Service and Repair body and equipment mounted on a 9,200 GVW minimum conventional truck cab and chassis meeting the requirements of the attached Specification No. 00830-127-081. To inlcude the following options: Option No. 4: Push Bumper Option No. 5: 1800 Watt Inverter Option No. 7: Cone Holders Option No. 8: Arrow Stick Option No.15: Crew Cab Maint. Class 00844 ID. No. 7005249 EBR No. 7005249/26 Ship To Caltrans Shop 26: 1385 North West Ave., Fresno, Ca 93778	37,288.0000	37,288.00
27	1	EA	2320-999-0007-8	TRUCK (AS DESCRIBED) 96 inch Service and Repair body and equipment mounted on a 9,200 GVW minimum conventional truck cab and chassis meeting the requirements of the attached Specification No. 00830-127-081. To inlcude the following options: Option No. 1: Telescopic Steel Cover Option No. 4: Push Bumper Option No. 5: 1800 Watt Inverter Option No. 8: Arrow Stick	37,413.0000	37,413.00

STATE OF CALIFORNIA
Department of General Services - Office of Procurement

PURCHASE ORDER CONTINUATION

Form GSOP 2-PIN (04/98)

Purchase Order No.	*Revision*	*Date*	*Supplier No.*	*Supplier Name*
62064		6/30/2008	763390	COALINGA MOTORS INC

Item No.	*Quantity*	*Unit*	*Commodity Code*	*Description*	*Unit Price*	*Extension*
				Option No.15: Crew Cab Maint. Class: 00844 ID. No.: 7004963 EBR No.: 7004963/28 Ship To Caltrans Shop 28: 320 South Sierra Way, San Bernadino, Ca 92408		
28	1	EA	2320-999-0007-8	TRUCK (AS DESCRIBED) 96 inch Service and Repair body and equipment mounted on a 9,200 GVW minimum conventional truck cab and chassis meeting the requirements of the attached Specification No. 00830-127-081. To inlcude the following options: Option No. 5: 1800 Watt Inverter Option No. 7: Cone Holders Option No. 8: Arrow Stick Option No.15: Crew Cab Maint. Class: 00844 ID. No.: 7004966 EBR No.: 7004966/28 Ship To Caltrans Shop 28: 320 South Sierra Way, San Bernadino, Ca 92408	36,392.0000	36,392.00
29	1	EA	2320-999-0007-8	TRUCK (AS DESCRIBED) 96 inch Service and Repair body and equipment mounted on a 9,200 GVW minimum conventional truck cab and chassis meeting the requirements of the attached Specification No. 00830-127-081. To inlcude the following options: Option No. 5: 1800 Watt Inverter Option No. 7: Cone Holders Option No. 8: Arrow Stick Option No.15: Crew Cab Maint. Class: 00844 ID. No.: 7004972 EBR No.: 7004972/28 Ship To Caltrans Shop 28: 320 South Sierra Way, San Bernadino, Ca 92408	36,392.0000	36,392.00
30	1	EA	2320-999-0007-8	TRUCK (AS DESCRIBED) 96 inch Service and Repair body and equipment mounted on a 9,200 GVW minimum conventional truck cab and chassis meeting the requirements of the attached Specification No. 00830-127-081. To inlcude the following options: Option No. 3: Cone Carrier Option No. 5: 1800 Watt Inverter Option No. 7: Cone Holders Option No. 8: Arrow Stick Option No.17: Diesel Engine	40,347.0000	40,347.00

STATE OF CALIFORNIA
Department of General Services - Office of Procurement

PURCHASE ORDER CONTINUATION

Form GSOP 2-PIN (04/98)

Purchase Order No.	*Revision*	*Date*	*Supplier No.*	*Supplier Name*
62064		6/30/2008	763390	COALINGA MOTORS INC

Item No.	*Quantity*	*Unit*	*Commodity Code*	*Description*	*Unit Price*	*Extension*
				Maint. Class 00930 ID. No. 7004882 EBR No. 7004882/31 Ship To Caltrans Shop 31: 7179 Opportunity Road, San Diego, Ca 92111		
31	1	EA	2320-999-0007-8	TRUCK (AS DESCRIBED) 96 inch Service and Repair body and equipment mounted on a 9,200 GVW minimum conventional truck cab and chassis meeting the requirements of the attached Specification No. 00830-127-081. To inlcude the following options: Option No. 1: Telescopic Steel Cover Option No. 5: 1800 Watt Inverter Option No. 7: Cone Holders Option No. 8: Arrow Stick Option No.13: Power Door Locks and Windows Option No.16: Four Wheel Drive Maint. Class 10830 ID. No. 7005087 EBR No. 7005087/23 Ship To Caltrans Shop 23: 981 North Beale Rd., Marysville, Ca 95901	38,000.0000	38,000.00
32	1	EA	2320-999-0007-8	TRUCK (AS DESCRIBED) 96 inch Service and Repair body and equipment mounted on a 9,200 GVW minimum conventional truck cab and chassis meeting the requirements of the attached Specification No. 00830-127-081. To inlcude the following options: Option No. 1: Telescopic Steel Cover Option No. 5: 1800 Watt Inverter Option No. 7: Cone Holders Option No. 8: Arrow Stick Option No.13: Power Door Locks and Windows Option No.15: Crew Cab Option No.16: Four Wheel Drive Maint. Class 10844 ID. No. 7005088 EBR No. 7005088/23 Ship To Caltrans Shop 23: 981 North Beale Rd., Marysville, Ca 95901	40,234.0000	40,234.00
33	1	EA	2320-999-0007-8	TRUCK (AS DESCRIBED) 96 inch Service and Repair body and equipment mounted on a 9,200 GVW minimum conventional truck cab and chassis meeting the requirements of the attached Specification No. 00830-127-081. To inlcude the following options: Option No. 1: Telescopic Steel Cover Option No. 5: 1800 Watt Inverter Option No. 7: Cone Holders	40,234.0000	40,234.00

STATE OF CALIFORNIA
Department of General Services - Office of Procurement

PURCHASE ORDER CONTINUATION

Form GSOP 2-PIN (04/98)

Purchase Order No.	*Revision*	*Date*	*Supplier No.*	*Supplier Name*
62064		6/30/2008	763390	COALINGA MOTORS INC

Item No.	*Quantity*	*Unit*	*Commodity Code*	*Description*	*Unit Price*	*Extension*
				Option No. 8: Arrow Stick Option No.13: Power Door Locks and Windows Option No.15: Crew Cab Option No.16: Four Wheel Drive Maint. Class / ID. No. / EBR No. 10844 / 7005089 / 7005089/23 Ship To Caltrans Shop 23: 981 North Beale Rd., Marysville, Ca 95901		
34	1	EA	2320-999-0007-8	TRUCK (AS DESCRIBED) 96 inch Service and Repair body and equipment mounted on a 9,200 GVW minimum conventional truck cab and chassis meeting the requirements of the attached Specification No. 00830-127-081. To inlcude the following options: Option No.15: Crew Cab Option No.16: Four Wheel Drive Option No.17: Diesel Engine Maint. Class / ID. No. / EBR No. 10944 / 7005437 / 7005437/32 Ship To Caltrans Shop 32: 1920 35th St., Sacramento, Ca 95816	41,159.0000	41,159.00

*** Miscellaneous ***

Group Miscellaneous Charges and Discounts	Dollar Value
MISCELLANEOUS FEE TAX/DOLLARS	297.50

California Tire Fee Act

($1.75 x 170 tires)

Total Value: 1,184,073.50

FOR THE PURPOSE OF THIS AWARD

Only F.O.B. Destination will be accepted.

Each unit shall comply with Caltrans Equipment Quality Standards for Electrical, Welding, Paint and Coatings as defined at http://www.dot.ca.gov/hq/eqsc/qualstand.htm.

Vehicles are to be delivered complete and ready to operate (TURN KEY).

CALIFORNIA TIRE FEE ACT

A fee of $1.75 per tire has been added to the purchase order to cover the costs imposed by the California Tire Fee Act (California Public Resources Code Section 42885 et. seq.).

STATE OF CALIFORNIA
Department of General Services - Office of Procurement

PURCHASE ORDER CONTINUATION

Form GSOP 2-PIN (04/98)

Purchase Order No.	*Revision*	*Date*	*Supplier No.*	*Supplier Name*
62064		6/30/2008	763390	COALINGA MOTORS INC

Item No.	*Quantity*	*Unit*	*Commodity Code*	*Description*	*Unit Price*	*Extension*

INCREASE QUANTITY

The State reserves the right to increase quantity by 25% within 90 days of Purchase Order date.

SALES TAX

Sales tax is not included in the bid pricing or the purchase order award. Sales tax should be added at time of invoicing. The sales tax rate applied should be based on the rate of the area the product is delivered to.

CHANGE ORDERS

Any Purchase Order resulting from this bid may be amended, modified, or terminated at any time by mutual agreement of the parties in writing. Change orders amending, modifying or terminating the Purchase Order, including any modifications of the compensation payable, may be issued only by the State Procurement Officer. All such change orders shall be in writing and issued only upon written concurrence of the supplier. Termination, as that term is used in this section, does not include termination for default of the supplier.

SCPRS

This Purchase order has been registered into the state contact and procurement registration system (https://www.scprs.dgs.ca.gov/). The registration number is 26600608315968.

STATE OF CALIFORNIA, DEPARTMENT OF TRANSPORTATION
DIVISION OF EQUIPMENT

ITEM NO.	UNIT	CAB	TRANS	ENG	CAP	C.A.	F.A.	R.A.
00830	TRUCK	C	AUTO	G300	9,200	56"		

SPECIFICATION NUMBER: 00830-127-081

SPECIFICATIONS FOR: READY TO OPERATE (TURNKEY) 96" SERVICE & REPAIR BODY AND SPECIFIED EQUIPMENT MOUNTED ON A (GASOLENE POWERED) CONVENTIONAL 9,200 LB. GVW CAB & CHASSIS

PURCHASE ESTIMATE NUMBER: 32-12-5367

It is the intent of this specification to describe the minimum requirements to furnish and install a 96" Service & Repair Body onto a gasoline powered conventional 2WD & 4WD truck cab and chassis with a minimum 9,200 GVW.

A post-award meeting may be conducted at the California Department of Transportation, Division of Equipment Headquarters office located at 34th Street and Stockton Blvd., Sacramento, CA 95816 with the successful supplier and pertinent Department of Transportation personnel following award of the order. The meeting will consist of an outline of the complete fabrication process.

The specification shall take precedence over the drawings. The 96" Service & Repair body shall be fabricated and installed in accordance with this specification and the State of California, Department of Transportation, Division of Equipment Drawings.

All brands and models indicated are for reference only. Size dimensions may vary a nominal amount in accordance with industry standards.

Only technical changes authorized by the Specification Engineer in writing will be accepted. Technical changes made by any other employee will not be accepted.

Each unit shall comply with Caltrans Equipment Quality Standards for Electrical, Welding, Paint, and Coatings as defined at: http://www.dot.ca.gov/hq/eqsc/qualstand.htm.

All listed items on the following drawings shall be supplier supplied and installed on all units except optional equipment: The supplier shall supply all parts and items completely fabricated and assembled from the proper materials in accordance with these specifications and drawings to form a complete, finished turn key truck.

I-00830-01 & 02	BODY ASSEMBLY
U1-D028-01	LED CABINET LIGHTING
P2-D071-01	LIGHT RACK
E2-D223-01	WATER CAN HOLDER
E2-D254-01	SIGN TUBE
E2-D119-01	REAR BUMPER
I-00830-DE	VEHICLE DELINATION
E2-D260-01	VISE SOCKET INSTALLATION (ONLY)

NOTE: The vehicle will be equipped and wired per drawings 1-08-008DG-ES1 & ES2, 1-08-008GM-ES1 & ES2, or drawings 1-08-008FD-ES3 depending on the vehicle brand bid. Chock block rack (Drawing # E2-D143-01) shall be supplied and not installed.

NOTE: The optional equipment identified on the following drawings shall only be supplied and installed when specified on the invitation for bid: (Identified Per line Item)

U1-D022-01	INVERTER, WIRING, AND BATTERY
E2-D129-01	CONE HOLDERS
I-008DG-CH2	MOUNT
F1-08-008FD-CH1	MOUNT
I-008GM-CH1	MOUNT
E2-D144-01	CONE CARRIER
I-008DG-CH2	MOUNT
F1-08-008FA-CC1	MOUNT
I-008GM-CC1	MOUNT
I-108DG-CC2	MOUNT
F1-08-008FD-FM1 & FM2	MOUNT
E2-C105-01	PUSH BUMPER
I-008DG-PB2	MOUNT
F1-08-008FD-PB1	MOUNT
I-008GM-PB1	MOUNT
I-00836-1	MECHANIC'S BODY DETAIL
I-0083SUR-1 & 2	SURVEYOR'S BODY

The cab and chassis will be a conventional, regular cab, crew cab, 4 x 2, or 4 x 4, with an automatic transmission, limited slip differential, and factory installed towing package. The cab configuration and all optional equipment will be identified on the Invitation for bid. (Per line Item) The complete unit will be supplied with a 100,000 mile, 5 year, parts and labor warranty.

TECHNICAL SPECIFICATIONS

1. CAB AND CHASSIS:

A. CAPACITY: The manufacturer's Gross Vehicle Weight Rating (GVWR) should not be less than 9,200 pounds (lb.).

B. WHEELBASE: The wheelbase (For Standard Cabs) should be approximately 133 inches. The effective dimension from the back of the cab to center of the rear axle (For Standard Cabs) should be approximately 56 inches.

(NOTE): Dimensions will vary do to different vehicle manufacturer's, extended cabs, crew cabs, GVW options, and required equipment.

C. ENGINE: The truck shall be equipped with a naturally aspirated, gasoline fueled engine with a minimum 300 horsepower (HP) and a minimum gross torque rating of 360 lb. ft. The engine shall have a minimum 6.0 Liter piston displacement and be equipped with the following accessories:

i. A spin-on, full-flow, element type oil filter

ii. Positive crankcase ventilation.

iii. Electronically controlled fuel injection system.

iv. The highest capacity air cleaner available shall be supplied. The air cleaner connections shall be dustproof, waterproof, and either tubing or hose mounted to withstand abrasion, wear, and vibration. The top of the air cleaner assembly shall not extend above the top of the hood.

v. Electric key shutoff.

vi. Coolant temperature gauge.

Vii Oil pressure gauge

D. ELECTRICAL: A minimum 115-amp alternator with matching regulator shall be furnished. The battery system shall be made up of not less than one (1) 12-volt maintenance free battery (Ref. Delco's Freedom or comparable). The battery rating shall be not less than 600 CCA (cold cranking amps) at 0° F.

E. TRANSMISSION: The transmission shall be a minimum 4-speed automatic transmission with overdrive. The transmission shall be equipped with a torque converter as recommended by the transmission manufacturer. The transmission and torque converter supplied shall be compatible with the maximum torque of the engine supplied.

Transmission controls and mounting shall be in accordance with the transmission and vehicle manufacturer's specifications and recommendations. The shift selector indicator shall be backlighted for nighttime operation.

F. COOLING SYSTEM: The engine shall be equipped with the highest capacity radiator available with the truck model supplied.

G. EXHAUST: The muffler, catalytic converter, and tail pipe shall be mounted in a horizontal position.

H. FRONT AXLE: The front axle shall have a minimum manufacturer's Gross Axle Weight Rating (GAWR) of 4,100 pounds for the axle, springs, and brakes.

I. REAR AXLE: The rear axle shall be a single reduction limited slip unit with a minimum manufacturer's GAWR of 6,000 pounds for the axle, springs, and brakes.

J. STEERING GEAR: Steering shall be an integral valve hydraulic powered type steering.

K. WHEELS: Five (5) steel disc-type wheels shall be furnished. The wheels shall be drop center tubeless type designed for use with radial type tires. Wheel widths shall be as recommended by The Tire and Rim Association Inc. and the tire manufacturer.

Tire chain clearance shall be provided for tire chains. Clearance shall conform to the requirements of SAE J 683.

L. TIRES: Five (5) all season radial tubeless type tires, mounted on the wheels, shall be furnished. All tires shall be a minimum size LT245/75R16. All tires shall have highway type tread. Tires provided shall meet the GAWR of the respective axles.

M. CAB: The cab shall be the conventional cab design enclosed with an approved safety glass windshield, rear window, roll down side door glass, a front hood and fenders, and rubber cab mounts. The cab shall be fully locking with three (3) complete sets of keys per unit. The cab interior shall be brown, beige, or gray in color, or as deemed acceptable by the State.

1. The following items, supplementing, if necessary, those items already cataloged as standard cab equipment, shall be furnished and installed:

   i. Dual sun visors.

   ii. Multi-speed cab heater, windshield defroster, and factory installed refrigerated air-conditioning integral with the heating unit.

iii. Right and left outside rearview mirrors.

iv. Dual windshield wipers with an intermittent feature shall be provided.

v. Arm rests.

vi. Electric horn.

vii. All necessary instruments including but not limited to a speedometer. Warning lights shall not substitute for readable indicating instruments.

viii. All gauges and controls shall be marked/identified for function and use in English. The markings shall be explicit, legible, and permanent. International symbols may be used to supplement (not in lieu of or predominate over) the above. Any precautionary signs shall be similarly marked. All gauges shall be panel mounted, shall be consistent in size, color scheme, pointer design, and label style and size. All gauges shall be adequately illuminated for nighttime operation, with an infinitely variable brightness control from full bright to off. Gauges mounted below the dash are not acceptable. All gauges shall provide ready visibility to the operator.

ix. Fresh air ventilators or a combination fresh air and recirculating ventilation system.

x. Storage compartment.

xi. Dome light. Light shall be activated by opening the driver door, the passenger door, and by a switch in the cab.

xii. Floor mats, headliner and cab insulation. Bare metal or fiberboard will not be considered as insulation.

xiii. Seating for three (3) people. The Operator's seat shall be adjustable fore and aft.

xiv. Seat belts installed for each passenger. A lap belt and a shoulder belt shall be installed for the driver and outboard passenger.

xv. Standard AM/FM stereo radio.

xvi. Tilt steering wheel.

xvii. Halogen head lamps

N. FUEL CAPACITY: The total fuel capacity shall be a minimum of 32 gallons.

2. BODY: The body should have an overall length of 96 to 98 inches and an overall width of 78 to 79 inches. Overall body width dimensions do not include fenders. In general, the body width shall exceed the overall width of the truck's rear tires. The body should have an overall height of 36 to 38 inches (measured at the front of the body) with a height of 29 inches from the frame of vehicle to the top of the body and so constructed that when mounted on the above described chassis, there should be a space of 1 to 2 inches between the front panel and the cab.

The body shall be designed for severe service applications, be of all steel construction, and shall withstand the bending and torsional forces exerted when loaded to the truck's maximum GVWR. As a minimum, thickness of sheet metal used in constructing the body shall not be less than the following:

12-gauge:	Smooth floor
14-gauge:	Body front & rear end panels
16-gauge:	Body shell (except end panels)
14-gauge:	Tailgate (double panel construction)
16-gauge:	Doors (double panel construction)

The unit shall consist of two body sections approximately 18 inches deep by 96 to 98 inches overall length, mounted one on each side of the floor plate. The body sections shall be joined at the front by a vertical sheet extending from the floor plate to a height level with the uppermost surface of the body sections. A heavy duty hinged tailgate and supporting members shall join the body sections at the rear.

Each body section shall contain compartments for the storage of miscellaneous articles.

Each compartment shall be provided with doors opening outward. Longitudinal ribs shall be incorporated into the top or the top otherwise reinforced to provide rigidity. Diamond plate will not be acceptable to provide rigidity to the top.

There shall be not less than four cross members under the floor for support and mounting the body. The front and rear cross members shall be made of minimum 10 gauge steel or 11 gauge high tensile steel; the inside cross members shall be made of minimum 10 gauge steel.

3. RIGHT-HAND SECTION (CURB SIDE):

a. A vertical compartment approximately 36 inches high by 22 inches wide by 18 inches deep shall be located at the extreme front part of the section and shall be fitted with a door hinged at the forward edge. This compartment shall be fitted with three tray type steel shelves, adjustable on 3 inch to 4 inch centers.

b. A horizontal compartment approximately 18 inches high by 18 inches deep by 68 to 74 inches long shall be located at the uppermost part of the body section and extending from the back wall of the front vertical compartment to the rear of the body. This compartment shall be fitted with two full length steel shelves with bolt bins not less than 12 inches in width and 3 inches in depth with removable 18

gauge steel dividers on 4 inch centers. Dividers shall be provided for both shelves. A minimum clearance of 4 inches shall be provided above the bolt bins for access. The front of the bolt bins shall be sloped to facilitate removal of bolts. The door shall be hinged horizontally on the lower edge and shall be supported by suitable links or chains so as to provide a shelf when open.

c. A compartment approximately 18 inches high by 19 inches wide and 18 inches deep shall be located at the lower rear section. The door for this compartment shall be vertically hinged at the forward edge of the compartment.

4. LEFT-HAND SECTION (STREET SIDE): The left section shall be provided with compartments identical to those of the right hand section, except that the interior of the horizontal compartment shall be equipped with two steel shelves with lips. Trays with dividers are not required in the left horizontal compartment. A minimum clearance of four inches shall be provided above the shelves for access.

5. DOORS: All door joints shall be of weather tight and dust-proof construction. The hinges shall be either the continuous type, or rods with steel end brackets. The doors and seals shall be of a design that will provide the maximum opening to each compartment.

The locks on all doors, except as otherwise indicated, shall be cam type, slam type with double hook striker plates or rotary lock type, with recessed handles. The handles on the door locks shall not be readily removable from the outside. Locking doors shall be secured by either individual keyed locks or by master lock bars with single locks. All compartment locks shall be keyed alike, and not less than four master keys shall be furnished. If only one horizontal door is furnished per side, the horizontal doors shall each be fitted with two latch locks or with one lock controlling two latches. The latches shall be located equidistant from the door ends where the distance between them shall not be less than one half the overall length of door.

6. LOAD SPACE: The load space should be approximately 37 to 42 inches wide and extend the full length of the body. The floor shall be constructed with minimum 12 gauge sheet steel. Located at each of the four corners of the floor shall be a recessed tie-down "D-ring". When not in use, each tie-down shall tuck into the floor so as to provide a smooth, non-protruding floor load space.

7. TAILGATE: The tailgate shall extend the full width of the load space, should not be less than 10 inches in height, and shall be supported by metal straps, chains, or other mechanism when lowered to the horizontal position. The gate shall be level with the floor when the tailgate is open. The gap between floor and tailgate shall not exceed 3/16 inch when the tailgate is closed.

8. REAR BUMPER: One bumper, fabricated in accordance with Drawing E2-D119-1, shall be mounted to each unit. A removable vise bracket pocket shall be installed according to Drawing E2-D260-01. The bumper shall be mounted to the truck frame using six grade 8 bolts with lock nuts and washers. The bumper shall be finish painted in the same color as body.

9. CONSTRUCTION: The body shall be constructed entirely of steel and electric arc or resistance welded throughout to form a composite weather-tight and dust-tight unit. Plastic parts will not be allowed. Exceptions as indicated will be permitted.

   a. Door panels may be bolted, riveted or welded to the hinges and the hinges may be bolted, riveted or welded to the body.

   b. Self-tapping sheet metal screws and aluminum pop-type rivets shall not be used at any point in the fabrication of this unit. Rivets or bolts, if used, shall be all steel, solid shank, of proper size and spacing to provide ample strength for the purpose intended. Exposed joints shall be weather-tight and dust-tight.

   c. Floor base members shall be formed from hot-rolled steel. Body sheets and door panels shall be cold-rolled sheet steel. Floor plate shall be smooth finished and shall be supported on a substantial steel frame of cross members and stringers. The body will have not less than four cross-members extending the full width of the body for attaching to the truck frame.

   d. Sheets and panels shall be reinforced wherever necessary to provide a proper degree of rigidity.

   e. All exposed edges of fenders, door panels, and shelving shall be folded, beaded, or otherwise stiffened and smooth.

   f. The floor in the load space shall have two ½-inch diameter drainage outlets in the front section of body.

   g. All compartments shall have a minimum of 3/8-inch diameter drainage outlets.

   h. The rear wheel wells shall contain adequate clearance for tires with snow chains. Clearance shall conform to the requirements of SAE J 683.

   i. All installed equipment will be properly sealed so as not to create water leaks into any of the body compartments.

10. MOUNTING: The body shall be shear plate mounted to the chassis at a minimum of three points on each side including any flex type mounts if the body is designed to flex with the frame. Each shear plate shall be bolted to the truck frame with two ½-inch bolts. One mount shall be located between the rear spring hangers. Minimum ½-inch, Grade 8 bolts shall be used in all mounting locations. The body shall be placed to provide approximately 1 to 2-inches space between the cab and the body. Mounts shall be welded to the body cross members and bolted to the truck frame. The body shall not be bolted or welded to the rear bumper in any way. (Refer to Drawing 1-00830-02 for mounting brackets)

    Do not weld to the truck frame or drill the frame flanges. Where possible use existing truck frame bolt holes on the frame and flanges for supporting mounts, or shear plate mount to the frame at the web center. U-bolts are not acceptable mounting hardware.

All spacer materials used between truck frame and body shall be steel. Leave clearance for side gas tank, angled, recessed filling adapter. Use the truck manufacturer's body builder guide for fuel tank filler pipe installation.

11. BODY LIGHT HOLES: Mounting holes for clearance lights and tail lights and for side clearance lights shall be round, and formed by drilling, precision punching or precision pattern torching. Hand cutting torch methods are not acceptable.

12. LIGHT & ANTENNA RACK: A light rack shall be fabricated according to Drawing P2-D071-01 and installed above the front head sheet on the front boxes according to Drawing 1-00830-01. An amber light and two work lights (Ref: Unity AG-C-H7609) shall be mounted to all light racks. The amber light shall be a (Target tech, Highlighter-450112 Amber).

The operation of the light unit shall not cause interference with Caltrans radios, scanners, antennas, anti-lock brake system or any other electronic equipment mounted in the vehicle. The light unit shall not be affected by mobile radio transmission.

13. SIGN TUBE: A sign tube shall be fabricated according to Drawing E2-D254-01 and installed above the left compartments according to Drawing I-00830-01 unless otherwise requested by Cal-Trans Engineering. The sign tube kit is available from Weatherguard (Ref. Weatherguard #239 6' PVC conduit carrier kit) for everything except the 6" PVC tubing.

14. COMPARTMENT LIGHTS: Each body compartment shall be equipped with led type cabinet lighting, (Per Drawing No. U1-D028-01, properly secured and wired. To come on only when the truck ignition is in the accessory or in the on position. The lighting shall not interfere with adding or removing objects from the compartments.

15. IGLOO WATER COOLER BRACKET: A water can bracket shall be fabricated according to Drawing E2-D223-01 and installed above the right front compartment according to Drawing I-00830-01. The bracket shall be mounted close to the outside edge of the compartment to facilitate filling a cup without removing the water cooler from the mounting bracket.

16. BACKUP ALARM: A backup alarm shall be mounted securely to a truck frame cross member at the rear on the driver's side. The backup alarm shall be wired to operate when the backup lights are on (Ref. ECCO Model 530). The alarm shall not activate when locking the vehicle.

17. WHEEL CHOCK HOLDER: One (1) wheel chock holder shall be supplied as per Drawing E2-D143-01 and not installed.

18. WORK LIGHTS: Two 12 volt work lights shall be installed on the light rack as per Drawing P2-D071-01. The work lights shall be a Unity Mfg. Company Model AG-C-H7609 or equivalent.

19. DECAL INSTALLATION: The Cal-Trans standard decal package shall be installed according to Drawing: I-00830-DE. The installation shall be a product of good workmanship.

20. ELECTRICAL EQUIPMENT: Minimum electrical equipment shall comply with all Federal Motor Vehicle Safety Standards and State of California Department of Motor Vehicle regulations. All lights shall be the recessed type, mounted in rubber grommets. The tail, stop and turn signal may be in combination (Ref. Truck-Lite 40015 complete unit with reflectorized lens). Backup lights shall be installed (Ref. Truck-Lite 40004). Side marker, and clearance lamps shall be installed and be 2-1/2-inch sealed units with reflectorized lens (Ref. Truck-Lite 10205R, 10205Y and 10401 grommet mounting kit). Combination tail, stop, turn, backup and side marker lights (Ref. Grote Series 52802, 52812, 52822, and 52832) may be furnished and installed in lieu of the separate lights; these shall be mounted to effectively use the side marker lights. Reflectorized lens shall meet all requirements for Class A reflectors. Mounting holes for lights shall be the proper dimension as recommended by the manufacturer of the light. The holes shall be punched or saw cut and finished smooth.

All wiring installed by the vendor should be the stranded copper type and shall have cross-linked polyethylene insulation and be protected in vinyl plastic auto loom and in areas specified, by rigid/flexible conduit. Adequate size gauge of wire to the lights shall be used in accordance with SAE standards for distance from power source and load demand. Wiring color code for lights shall comply with SAE standard J560(b). The ends of all stranded conductors cut shall be mechanically stripped and fitted with insulated type terminals. The terminals shall be mechanically crimped securely with appropriate tool(s). All splices shall be sealed against moisture. Scotch Lock wire type piercing devices shall not be used.

Appropriate tools should be the following, or comparable, for use and purpose as applicable:

Wire Stripper: Ideal Industries, Inc., Catalog Number 45-092.

Cable Stripper: Ideal Industries, Inc., Catalog Number 45-128.

Multi-Crimp Tool: Ideal Industries, Inc., Catalog Number 30-429.

Cutting Pliers: Klein Tools, Inc., Number 7YLL (1104).

Ground return connections shall be attached to the vehicle frame, body and/or engine. In cases where the engine or body is mounted on rubber or other insulation, proper ground shall be provided with grounding straps. Star type locking washers will be utilized on all grounds.

The edge of all metal members which wire harness or loom pass through shall be deburred, flanged, rolled or bushed with suitable grommets. In general, wire routing shall be such that maximum protection is provided by the vehicle sheet metal and structural components. All electrical work and installation of equipment/devices shall be

completed in a workmanlike manner, mechanically and electrically secure. Devices, lamps, etc., requiring periodic service shall be serviceable and accessible by providing wire length to reasonably accomplish this.

An SAE standard seven terminal, trailer light wiring socket (Ref. Pollak No. 11-721 with a No. 11-761 boot or comparable) shall be installed and wired in accordance with the attached wiring schematics. The wiring socket shall be installed in the rear bumper above and left of the pintle hook.

21. MATERIAL: Construction shall be of all new material free of rust and any defects. All components in the assembly shall be fabricated from a single piece of material. Material being joined by welding or other means to form a single piece of stock is not acceptable. The finished product shall be free of dents and warpage. The use of any type of body filler is unacceptable. All bolts shall conform to SAE and ASTM standards. Bolt lengths shall be such that a minimum of two threads shall extend beyond the nut. Nuts shall be the locking type. Nuts and washers shall be compatible with the bolt(s) to which they are attached, as recommended by the fastener manufacturer and in accordance with SAE and ASTM standards.

22. METAL SHAPING: All breaks shall be free of cracks. Radii shall be at least twice the thickness of the material or in accordance with the requirements established by ASTM for the particular material being formed, whichever is greater. All holes shall be round, of the proper dimension, perpendicular to the material they are produced in, and finished smooth. Oblong holes or holes drilled, bored, etc. at angles are not acceptable. Holes and slots shall be drilled, punched, saw cut, plasma cut, or milled; torch cut holes are not acceptable. Sharp corners on all material shall be rounded to prevent injury.

23. WELDING: All welding shall comply with the requirements as represented in American Welding Society (AWS), D14.3-82, and American National Standard entitled "Specification for Welding Earthmoving and Construction Equipment."

All welds should be continuous except as noted. Intermittent or spot welds shall be spaced and proportioned to provide ample strength for the material being welded. Weld sizes not indicated shall be equal to the thickness of the least of the joined plates.

All welds shall be properly fused, displaying proper penetration and a professional finish, and must meet the qualification requirements of applicable AWS specifications. Examples of unacceptable welds are:

a.	Cracks	d.	Excessive Splatter
b.	Undercut	e.	Blow Holes
c.	Overlap	f.	Slag Entrapment

Any weld failing to comply with the AWS specification or failing to pass a quality assurance inspection performed by the State, will be corrected by the manufacturer, at

their expense, and be corrected off State property. The State shall determine if a weld is acceptable or deficient.

Any deficient weld shall be corrected by a welder who is certified in accordance with the requirements as established by the American Welding Society (AWS). The welder shall have the proper certification documents indicating that he/she is qualified to perform the type, size, and position of the weld performed, with the welding process utilized, and on the material being welded. The supplier will be required to supply proof of current welding certifications for personnel performing any re-welding on the unit, upon request of the State whether written or verbal.

24. PAINT: All metal surfaces shall be finish painted (outside, inside, and compartment interiors). All surfaces to be painted shall be prepared in accordance with the paint manufacturer's recommendations to provide maximum paint adhesion. All metal surfaces shall be primer painted in accordance with the paint manufacturer's recommendations, not less than 2 mils dry film thickness. The finish coat shall be lead free, and shall be not less than 2 mils dry film thickness (total of 4 mils). Ref: DuPont Imron 5000 (#N6431HN H), polyurethane enamel, or equivalent. Paint colors for the cab chassis; body and frame shall be in accordance with Caltrans Division of Equipment Fleet Identification Standards as shown on the California Department of Transportation Web Site at http://www.dot.ca.gov/hq/eqsc/qualstand.htm. The finish coat shall be free from runs, drips, sags, etc., and shall be evenly applied to provide a gloss finish. All paint and primer shall be lead free. The finish or top coat shall be compatible for re-coat or touch-up with lead free DuPont Imron 5000 referenced above. All interior compartment surfaces shall be painted the same color as the body. Any chassis mounting scars due to mounting body and equipment shall be repaired as necessary and refinished. Any paint overspray (glass, paint, rubber, etc.) shall be removed and the surface returned to its original condition. All paint material used shall be comparable, as determined by the State, to those referenced above.

STATE OF CALIFORNIA, DEPARTMENT OF TRANSPORTATION
DIVISION OF EQUIPMENT

ITEM NO.	UNIT	CAB	TRANS	ENG	CAP	C.A.	F.A.	R.A.
00830	TRUCK	C	AUTO	G300	9,200	56"		

SPECIFICATION NUMBER: 00830-127-081

SPECIFICATIONS FOR: READY TO OPERATE (TURNKEY) 96" SERVICE & REPAIR BODY AND SPECIFIED EQUIPMENT MOUNTED ON A (GASOLENE POWERED) CONVENTIONAL 9,200 LB. GVW CAB & CHASSIS

PURCHASE ESTIMATE NUMBER: 32-12-5367

ADMINISTRATIVE REQUIREMENTS

1. WARRANTY: All installed equipment including any optional accessory or modification to cab and chassis, shall be free from defects in workmanship and materials and be covered (parts and labor) under warranty for 100,000 miles and (5) years following the date the Department of Transportation (Caltrans) puts the unit into service. Caltrans will notify the supplier by mail of the in-service date and keep a record of the in-service date. A copy of the manufacturer's standard warranty for the unit, any accessory, optional equipment, and components shall be supplied with each unit at delivery, or upon request. The manufacturer will be held responsible for warranty (commencing from the date Caltrans puts the unit into service) for the following circumstances:

    1. The manufacturer's standard warranty exceeds five (5) years. Under this circumstance, the supplier is responsible until five (5) years is reached. The manufacturer will be held responsible for the balance of the manufacturer's standard warranty.

    2. The supplier is no longer an authorized dealer of the equipment supplied. Under this circumstance, the manufacturer will be held responsible for the balance of the manufacturer's standard warranty. The manufacturer shall establish a fully operational warranty service provider with capabilities equal to or exceeding the supplier's (or his designated warranty provider) within 45 days of the supplier's authorized dealer termination.

If the supplier is not the manufacturer or manufacturer's authorized representative, then a statement agreeing to the warranty conditions stated herein shall be signed by the manufacturer and submitted upon request prior to Purchase Order award.

An In-Shop Warranty agreement (see attached), signed by the supplier or manufacturer, shall be supplied prior to Purchase Order award.

Caltrans, at its option, may perform warranty work under the terms of the In-Shop Warranty agreement. If Caltrans opts not to perform the warranty work, the supplier shall pick up the unit within 48 hours of notification, written or verbal. The unit will be at a Caltrans facility. The unit shall be repaired and returned within 10 working days to the Caltrans facility where the unit was originally picked up. Upon prior approval with Caltrans and in compliance with all Caltrans Policies and Procedures, warranty work may be performed at a Caltrans facility.

The supplier may use a traveling mechanic to perform the warranty work. The supplier will be responsible for all associated costs (travel time, overtime, per diem, etc.).

Any supplier or manufacturer non-compliant with the warranty provisions set forth herein may be subject by the Procurement Division, Department of General Services, State of California to be removed from any future bidding.

For questions regarding the warranty or In-Shop Warranty agreement contact:

California Department of Transportation
Division of Equipment
P.O. Box 160048
Sacramento, CA 95816
Attn.: Warranty Coordinator

2. WORKMANSHIP: The equipment and any accessories shall be a product of good workmanship, shall be free from any defects that will affect their appearance or serviceability and shall be in accordance with Caltrans Division of Quality Standards.

3. SAFETY: The entire unit and accessories shall comply to the applicable provisions of the California Vehicle Code, the Safety Orders of the Division of Industrial Relations, and all Federal regulations in effect at the time of manufacture.

4. FINAL MANUFACTURER'S I.D. PLATE REQUIRED: A Final Manufacturer's Identification label shall be attached to the complete unit on the driver's side of the vehicle. The label shall be in compliance with the National Traffic and Motor Vehicle Safety Act, section 114 and Federal Code of Regulations 49.

5. IN-PROCESS REVIEW: The unit(s) shall require an in-process review to verify timely progress of construction of the unit(s) and to ascertain compliance with the intent of the specifications and drawings. If there are any questions regarding the intent of the specifications or drawings, call the "Agency Contact" as indicated on the Purchase Order title page. Any inprocess review will be at State expense conducted within the State of California only and will not constitute acceptance of the unit(s).

6. INSPECTION: This order will require a three (3) phase inspection process. For all inspections the unit(s) will be serviced, washed and ready for, as applicable, inspection or delivery. Inspections will begin within ten (10) working days from the date of the inspection request by the supplier. It is the supplier's responsibility to contact the Equipment Parts Coordinator for inspections.

FIRST PHASE (PRE-PRODUCTION MODEL): The first production unit or pre-production model of the series of units on this order shall be completed in accordance with the specifications and drawings, including all requested items and sub-components within 120 days of receiving the purchase order. Arrangements for inspection of the pre-production model (s) shall be made only when all work is complete. This inspection trip shall be State financed at no cost to the supplier.

The supplier shall provide a qualified, factory authorized, service representative to be in attendance at the pre-production inspection, as well as the pre-delivery inspection (second phase), to answer all questions regarding construction, system design, and function, to demonstrate all operations and functions, and to make any necessary adjustments to the units. The cost for this service shall be included in the bid.
On units where relative or interacting motions exist, these shall be demonstrated within the full range of movement (e.g., plow moldboard and push frame; brake components, dump body, tailgate, and subframe).

Component parts or details shall not be pre-cut or pre-formed for the final assembly of the remaining units until the design has been proven acceptable on the first production unit or pre-production model.

A written report will be submitted to the supplier within five (5) working days of the inspection indicating that the first unit is either acceptable or not acceptable. Unacceptable or non-compliant items will be listed on the report.

Additionally, where applicable, the supplier shall complete and sign the supplier pre-delivery inspection (PDI) form and the supplier shall note the appropriate Purchase Order Number and Line Item on each form.

If additional interim inspections are required, such inspection trips shall be at the expense of the supplier at $75.00 per hour (including travel time) and all expenses (meals, lodging, and cost of transportation). Travel expenses will be documented on State of California, Department of Transportation, Travel Expense Claim Form, FA302. These fees may be deducted from the invoice.

After inspection and acceptance by the State, the first production unit or pre-production model shall be the criteria or basis for acceptance of the balance of the delivery. This will not constitute final acceptance of each unit remaining on the Purchase Order.

SECOND PHASE (PRE-DELIVERY INSPECTION): In accordance with the State Administrative Manual, Section 4112 and the Caltrans inspection program, each unit will be inspected prior to shipment to the destination on the purchase order. This inspection trip(s) shall be State financed at no cost to the supplier.

Arrangements for pre-delivery inspections shall be made only when a unit is complete. Each unit shall be identified with the applicable Purchase Order and Line Item number. If corrections are needed as a result of the inspection, the corrections shall be made prior to shipment to the purchase order destination. Authorization to deliver unit(s) must be granted by the Department of Transportation, Division of Equipment, Quality Assurance Section.

If additional interim inspections are required, such inspection trips shall be at the expense of the supplier at $75.00 per hour (including travel time) and all expenses (meals, lodging, and cost of transportation). Travel expenses will be documented on State of California, Department of Transportation, Travel Expense Claim Form, FA302. These fees may be deducted from the invoice.

PRE-PRODUCTION AND PRE-DELIVERY INSPECTION LOCATION: The inspections shall be conducted by the Department of Transportation, Division of Equipment, Quality Assurance. These inspections shall take place at an adequate site provided by the vendor within the State of California. The inspection site should meet all of the following criteria:

a. The site shall not be the Purchase Order delivery destination. The site shall be paved, secure and zoned for commercial use.

b. The site should include electricity, lights, water, compressed air and a secure paved lot. The facilities shall also include lift equipment adequate to raise the units and support them on safety stands with a minimum of 12 inches of tire clearance. The supplier shall provide conditions which meet the safety standards of CAL-OSHA and Title 8 of the California Code of Regulations.

c. The adequacy of the site shall be determined by the Department of Transportation, Division of Equipment, Quality Assurance Section.

d. If the facility is deemed unacceptable by the Department of Transportation, Division of Equipment, Quality Assurance Section the vendor could be billed for the inspection trip including wages and expenses. This cost may be deducted from the purchase order payment.

THIRD PHASE (FINAL INSPECTION): Each unit will have a final inspection at its delivery destination shown on the Purchase Order to verify acceptability. The State will have five (5) working days after delivery of a unit to conduct the final inspection of said unit. Units delivered to the final Purchase Order destination will be accepted only when all Purchase Order requirements have been met, any shipping damages have been corrected, and all required documents are received by the Department of Transportation, Division of Equipment, Equipment Receiving. These documents

include, as applicable, the invoice, vehicle registration documents, parts book, operator's manuals, service manuals, lubrication instructions and charts, warranty information, certifications, questionnaires, etc. Units which are not accepted by the delivery date on the Purchase Order will be considered delivered late.

If the supplier receives written notice that the unit(s) is not acceptable, the unit(s) shipped to the Purchase Order destination shall be removed within seven (7) calendar days. If the supplier fails to remove said unit(s) from the State's facilities within the specified period, the State may forward said unit(s) to the supplier by common carrier at the supplier's expense and risk.

7. DELIVERY: Inspection, delivery, and final acceptance of all units on the Purchase Order shall be within 210 calendar days after the Purchase Order date. Contact the State of California, Department of Transportation, Division of Equipment, Equipment Parts Coordinator.

Failure of any units to comply with the specifications by the final delivery date may place the supplier in default and may be grounds for the State to invoke Paragraph 26 of the General Provisions, Rights and Remedies of the State for Default. The Department of General Services, Procurement Division will be notified at such time.

Acceptance of delivery or placement in operation of any equipment shall not release the manufacturer from liability for faulty design, workmanship, or materials appearing even after final payment has been made.

Completed units upon final delivery with more than 100 miles additional to the original pick-up mileage will be assessed $5.00 per mile for each mile exceeding the 100 miles.

This charge shall be deducted from the purchase order price for each vehicle delivered against the Purchase Order.

8. LATE DELIVERY CHARGES: The parties to this agreement acknowledge that the State shall incur actual damages should the supplier fail to perform the work as called out in the contract and specification on the dates set forth herein. The parties, therefore, have agreed to late delivery charges in the amount of $20.00 per unit per workday.

Workdays are Monday through Friday inclusive, except State holidays observed Monday through Friday inclusive.

The parties also agree that the amount specified is not unreasonable nor punitive in nature because both parties have carefully considered the amount specified and believe it to be a reasonable estimate, and not excessive at the time the purchase order is entered into.

It is, therefore agreed, that the supplier will pay the State of California the sum of $20.00 per unit per work day (as stated above) for each work day the work remains uncompleted or unaccepted by the State, provided the total late delivery charges

assessed against supplier shall in no event exceed twenty-five percent (25%) of the total value of the entire order, and the supplier agrees to pay said damages as herein provided. In the event such damages are not paid, the supplier agrees that the State may deduct the amount thereof from any monies due or that may become due said supplier.

9. CAB AND CHASSIS ACCEPTANCE: At the suppliers option the cab and chassis may be inspected and accepted prior to the completion of the entire unit in lieu of inspection at the time of completion of the unit. Upon notification of acceptance by the State the supplier shall be entitled to a payment of 90 % of the suppliers cost for the cab and chassis. The remainder of the cost (10 %) shall be paid upon acceptance of the completed unit as specified. If the inspection occurs outside the State of California the supplier shall cover all costs associated with the travel for the State inspector required to perform the inspection as specified in section 6, INSPECTION.

10. PAYMENT: Process for payment will be initiated on each unit as units are received and deemed acceptable. The discount period will start after acceptance of each unit on the Purchase Order.

11. **GENERAL: Each unit and all accessories and options shall be delivered completely assembled and ready to operate. (TURNKEY)**

No exceptions to the specifications will be allowed unless approved by the specification engineer in writing.

The component parts of the unit shall be new and of proper size and design to safely withstand the maximum stresses imposed.

The manufacturer's torque rating of each driven part shall be equal to or exceed the torque rating of its driving member.

All equipment and accessories cataloged as standard, unless superseded by these specifications, are to be furnished and included in purchase price of this unit.

Bids will be considered only on equipment represented by a supplier capable of providing adequate repair parts, warranty, technical assistance, and training in the United States as of the bid opening date. The supplier shall be capable of supplying repair parts to Caltrans within five (5) working days after a purchase order for parts is submitted to the supplier, whether by phone, fax, or mail. Bidders may be required to provide documentation supporting this requirement prior to award of the contract.

Suppliers shall be the equipment manufacturer, an authorized factory dealer or representative thereof, or shall have authorization from the equipment manufacturer or authorized factory dealer to solicit the equipment bid. The bidder shall be capable of providing parts, service, warranty, and training for the equipment bid as specified herein. If the bidder cannot provide these items for the equipment bid, the equipment manufacturer or an authorized factory dealer may provide these items for the bidder. Upon request, the signed agreement between the bidder and the equipment

manufacturer or authorized factory dealer, stating who will be responsible for providing parts, service, warranty, and training for the equipment bid, shall be provided to the State.

Bids will not be considered if supplier's designated f.o.b. delivery destination is other than the delivery address stated in the invitation to bid (per line item).

Only new models in current production, which are cataloged by the manufacturer and for which manufacturer's published literature and printed specifications are currently available, will be considered.

Special options may be included only when recommended by the manufacturer of the unit and approved by the specification engineer in writing.

****

I have received and agree to Administrative Requirements for Solicitation 56775 of 7 pages.

Signature of Vendor

Bill KEMERY
Printed Name

5-27-08
Date

manufacturer or authorized factory dealer, stating who will be responsible for providing parts, service, warranty, and training for the equipment bid, shall be provided to the State.

Bids will not be considered if supplier's designated f.o.b. delivery destination is other than the delivery address stated in the invitation to bid (per line item).

Only new models in current production, which are cataloged by the manufacturer and for which manufacturer's published literature and printed specifications are currently available, will be considered.

Special options may be included only when recommended by the manufacturer of the unit and approved by the specification engineer in writing.

****

I have received and agree to Administrative Requirements for Solicitation 56775 of 7 pages.

Signature of Vendor

MARK PARKINSON
Printed Name

5/27/08
Date

OPTIONS
(RETURN OPTION PAGE WITH BID)

The following options or accessories shall be furnished and installed when specified on the Invitation for Bid and Purchase Order. Price on options listed shall be per unit. All fabricated components shall be primed and painted with the same paint and color as the service body.

NOTE: Include the price for all options even though option prices written below are "non award" items.

1. Telescopic Steel Cover: The telescopic steel cover shall be constructed from minimum 16-gauge steel. The forward (fixed) portion shall be reinforced to provide rigidity. The rear (sliding) portions shall be creased (diamond) to provide rigidity. The cover shall have hinged end gate closure with a recessed cam or slam type two point lock, keyed alike and with the same type locks as the compartment locks. The cover shall be weather tight.

   Option No. 1 Price $ 995.00

2. Removable Vise Bracket: A removable vise bracket and vise shall be supplied according to Drawing E2-D260-01 and mounted as per Drawing E2-D119-01. Provisions to mount the bracket shall be provided in the rear bumper.

   Option No. 2 Price $ 300.00

3. Cone Carrier: A front bumper mounted cone carrier shall be supplied as per Drawing E2-D144-01, Only items # 103 & 104 shall be supplied on this drawing, and mounted as per Drawing I-00830-01.

   Note: The following six drawings will be supplied to aid in the fabrication of necessary hardware to mount the cone carrier to various cabs and chassis: I-008DG-CH2, F1-08-008FD-CC1, I-008GM-CC1, I-108DG-CC2, and F1-08-008FD-FM1 & FM2. The final mounting design shall be approved by Cal-Trans Engineering.

   Option No. 3 Price $ 682.00

4. Push Bumper: A push bumper shall be supplied as per Drawing E2-C105-01 and mounted as per Drawing I-00830-01.

   Note: The following three drawings will be supplied to aid in the fabrication of hardware to mount the cone carrier to various cabs and chassis: I-008DG-PB2, F1-08-008FD-PB1, and I-008GM-PB1. The final mounting design shall be approved by Cal-Trans Engineering.

   Option No. 4 Price $ 546.00

5. 1800 Watt Inverter: A 1800 watt inverter system shall be supplied and installed in the right front compartment according to drawing U1-D022-01. The inverter shall be a Prosine part # 806-1800. The battery shall be AGM deep cycle battery from Concorde Battery Corp. part # AGM 12210 and mounted in the front compartment. All wiring shall be per Drawing U1-D022-01. All components shall be as shown on the drawing.

Option No. 5 Price $ 3,579.00

6. Electric Trailer Brake Controller: An electric trailer brake controller (Ref. Tekonsha #TK9040 or comparable) shall be installed under the dash within easy reach of the driver and wired to the trailer light wiring socket.

Option No. 6 Price $ 300.00

7. Cone Holders: Two front bumper mounted cone holders shall be supplied as per Drawing E2-D129-01, and mounted as per Drawing I-00830-01.

   Note: The following three (3) drawings will be supplied to aid in the fabrication of hardware to mount the cone holders to various cabs and chassis: I-008DG-CH2, F1-08-008FD-CH1, and I-008GM-CH1.

Option No. 7 Price $ 420.00

8. Arrow Stick: An eight (8) lamp directional light arrow stick (Target Tech 322612-02) shall be supplied and installed as per Drawing I-00830-01. The arrow stick controller shall be mounted in the cab.

Option No. 8 Price $ 975.00

9. Crane 1,000-lb. Capacity: A 1,000lb. capacity (Ref. Central Hydraulics #37555) cable winch crane and mounts shall be supplied and installed in the right rear corner of the body as per Drawing I-00830-01.

Option No. 9 Price $ 816.00

10. Survey Body: The service and repair body shall be configured for survey crew work. All additional equipment and body modifications shall be fabricated and supplied as per Drawings I-0083SUR-1 & 2.

Option No. 10 Price $ 5,000.00

11. (DELETE)-Light & Antenna Rack: The light and antenna rack and all lights will not be supplied or installed. The switches and wiring will be supplied as per item #12, page 9 of 13 of the specification. The wiring will terminate in the bed of the body for all the lights.

Option No. 11 (CREDIT) Price $ -250.00

12. Heated Mirrors: Heated mirrors will be installed on the cab and chassis. The mirrors, wiring, and electrical switch will be OEM equipment from the vehicle manufacture. Dealer or OEM installation will be acceptable.

Option No. 12 Price $ 600.00

13. Power Door Locks and Windows: Power door locks and windows will be installed on the cab & chassis.

Option No. 13 Price $ 840.00

14. Mechanic's Body: The service and repair body shall be configured for traveling mechanics. All additional equipment and body modifications shall be fabricated and supplied as per No. I-00836-I.

Option No. 14 Price $ 4005.00

15. Crew Cab: Upgrade the Cab & Chassis to a four door crew cab vehicle.

(NOTE): The wheelbase, CA, and axle capacities may be different than called out in the body of the specification.

Option No. 15 Price $ 5,556.00

16. Four Wheel Drive: Upgrade the Cab & Chassis to four wheel drive.

(NOTE): The wheelbase, CA, and axle capacities may be different than called out in the body of the specification.

Option No. 16 Price $ 3,850.50

17. Diesel Engine: Upgrade the Cab & Chassis to diesel engine.

(NOTE): The wheelbase, CA, and axle capacities may be different than called out in the body of the specification.

Option No. 17 Price $ 8,439.00

WK

Specification No.: 00830-127-081
PE No.: 32-12-5367

CALTRANS IN-SHOP WARRANTY AGREEMENT

Name of Supplier/Manufacturer GENERAL MOTORS INC
Warranty Representative (print or type) BILL KEMERLY
Street Address 625 EAST FELIX ST
City, State, Zip Code CUALINGA CA 93210
Telephone Number 916-429-4700 (5677)
Solicitation No. 00830-127-081 (5677) Due Date 5-30-08
Item (Quantity/Brand/Model) 34 CHEVROLET SILVERADOS W/ CTEC BODIES

When equipment is purchased for Caltrans, a section of the specifications requires the supplier/manufacturer to enter into an In-Shop Warranty Agreement.

The terms of the In-Shop Warranty Agreement for this equipment are as follows:

1. Labor rate charged by Caltrans will be $100.00 per hour.

2. Warranty claims will be processed on a Caltrans Work Order unless the supplier/ manufacturer furnishes standard warranty forms.

3. Suppliers'/manufacturers' standard flat rate time schedules shall be used as a guide for In-Shop Warranty repair time. If a supplier's/manufacturer's flat rate time schedule is not available, Caltrans will use the time that is recorded on the Caltrans Work Order.

4. Replacement parts will be available within 5 working days from the date of receipt by supplier/manufacturer of a Purchase Order, whether the order is made by telephone or in writing.

5. Replaced parts will be held 60 days for inspection by the supplier/manufacturer.

6. Original Equipment Manufacturers' parts will be used as replacement parts; or, if OEM parts are not available, after-market parts of equal or better quality will be utilized.

7. Copies of invoices for all parts will be provided to the supplier/manufacturer.

Caltrans will contact the supplier/manufacturer for authorization to perform In-Shop Warranty repairs as stated in this agreement. Only under extreme emergency conditions will In-Shop Warranty be performed without prior authorization. If Caltrans opts not to perform the warranty work, the supplier shall pick up the unit within 48 hours of notification, written or verbal.

In-Shop Warranty Agreement shall remain in effect until all conditions of warranty in the State of California specifications and in the original manufacturer's warranty expire.

Signature, Caltrans Warranty Coordinator _____ Date

Signature, Supplier/Manufacturer _____ 5-27-08 Date

Specification No.: 008 30-127-081
PE No.: 32-12-5367

CALTRANS IN-SHOP WARRANTY AGREEMENT

Name of Supplier/Manufacturer N & M CORPORATION
Warranty Representative (print or type) MARK PERELMAN
Street Address 12351 BELLFLOWER BLVD.
City, State, Zip Code DOWNEY, CA. 90242
Telephone Number (562) 803-4466
Solicitation No. 56775 Due Date 5/30/08
Item (Quantity/Brand/Model) 34 / CTEC / 9838-HCT-79

When equipment is purchased for Caltrans, a section of the specifications requires the supplier/manufacturer to enter into an In-Shop Warranty Agreement.

The terms of the In-Shop Warranty Agreement for this equipment are as follows:

1. Labor rate charged by Caltrans will be $100.00 per hour.
2. Warranty claims will be processed on a Caltrans Work Order unless the supplier/manufacturer furnishes standard warranty forms.
3. Suppliers'/manufacturers' standard flat rate time schedules shall be used as a guide for In-Shop Warranty repair time. If a supplier's/manufacturer's flat rate time schedule is not available, Caltrans will use the time that is recorded on the Caltrans Work Order.
4. Replacement parts will be available within 5 working days from the date of receipt by supplier/manufacturer of a Purchase Order, whether the order is made by telephone or in writing.
5. Replaced parts will be held 60 days for inspection by the supplier/manufacturer.
6. Original Equipment Manufacturers' parts will be used as replacement parts; or, if OEM parts are not available, after-market parts of equal or better quality will be utilized.
7. Copies of invoices for all parts will be provided to the supplier/manufacturer.

Caltrans will contact the supplier/manufacturer for authorization to perform In-Shop Warranty repairs as stated in this agreement. Only under extreme emergency conditions will In-Shop Warranty be performed without prior authorization. If Caltrans opts not to perform the warranty work, the supplier shall pick up the unit within 48 hours of notification, written or verbal.

In-Shop Warranty Agreement shall remain in effect until all conditions of warranty in the State of California specifications and in the original manufacturer's warranty expire.

Signature, Caltrans Warranty Coordinator _____ Date _____

Signature, Supplier/Manufacturer [signature] 5/27/08 Date

BILL OF MATERIALS

ITEM	QTY	DESCRIPTION
101	1	ASSEMBLY C/O 102-104 CT STK #051-2103
102	1	2 x .180W x 18 LG STL SQ. TUBING
103	1	2 X 18 LG HALF ROUND RUBBER BUMPER COLUMBIA RUBBER MILLS # MSB-051-2116 DUROMETER 65-70 A CT STK #051-2116
104	4	3/8-16UNC NYLOCK NUT, GR 5

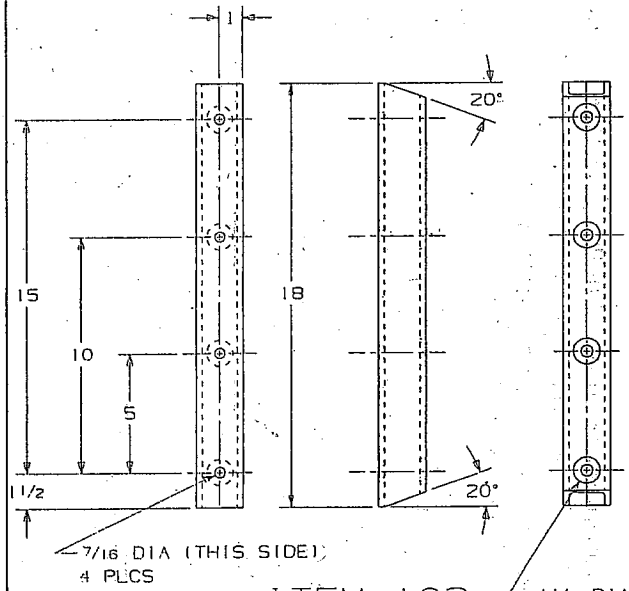

ITEM 102
SCALE: 1/4

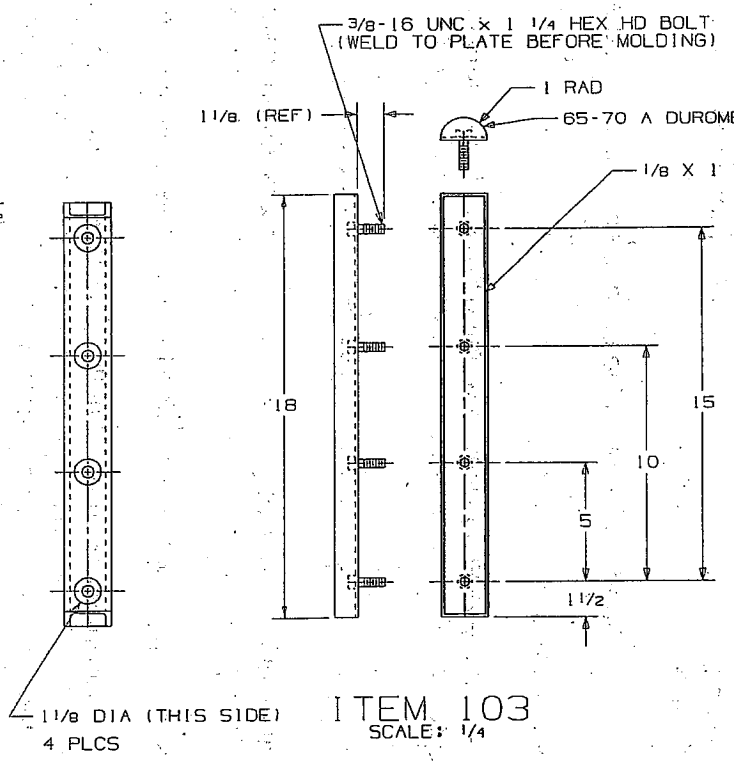

ITEM 103
SCALE: 1/4

NOTES:

1. ALL JOINTS TO BE WELDED CONTINUOUS UNLESS OTHERWISE SPECIFIED. SIZE OF ALL WELDS TO BE AT LEAST THE THICKNESS OF THE THINNER OF THE ADJACENT METALS.
2. DRAWING SHOWS ONE BUMPER, TWO REQ'D. PER TRUCK.
3. ALL WELDS, ELECTRICAL AND PAINT WILL BE IN COMPLIANCE WITH CALTRANS EQUIPMENT QUALITY STANDARDS. GO TO www.dot.ca.gov/hq/eqsc TO VIEW EQUIPMENT QUALITY STANDARDS.

CT STK # 051-2116 ITEM #103
CT STK # 051-2103 ITEM #101 (INCLUDES 103)

PE 32-12-5367

REV		DESCRIPTION	BY
G	Oct 01	ADDED DIM TO ITEM 103 AND 7/16 DIA WAS 1/2	J Payne
F	09/01	CHG'D ANGLE FROM 45° ON #102	JDR
E	05/00	DELETE INSTALLATION VIEW CHANGE 102 FROM ANGLE TO SQ. TUBING	MATSUO
D	03/00	CHG'D GROUND CLEARANCE	JDR
C	04/97	ITEM 101 DESCRIPTION WAS WRONG FOR STK #20-2103. WAS C/O 102 TO 104 & 106.	FLOWER
B	05/91	REDESIGNED & DELETED SHEET 2	JR
A	02/91	REDESIGNED ON CADD	JR

NEXT ASSEMBLY

TOLERANCE-UNLESS OTHERWISE SPECIFIED
DECIMAL ±
FRACTIONAL ± 1/16
ANGULAR ± 1°
DRILLED HOLES ±
REAMED HOLES ±

STATE OF CALIFORNIA
DEPARTMENT OF TRANSPORTATION
OFFICE OF EQUIPMENT

PUSH BUMPER FOR PICKUPS.

SCALE AS NOTED	DATE 10/27/83	E2-C105-01
DRAWN MTG	DESIGNED CAL	
CHECKED	APPROVED	SHEET 1 OF 1 SHEETS

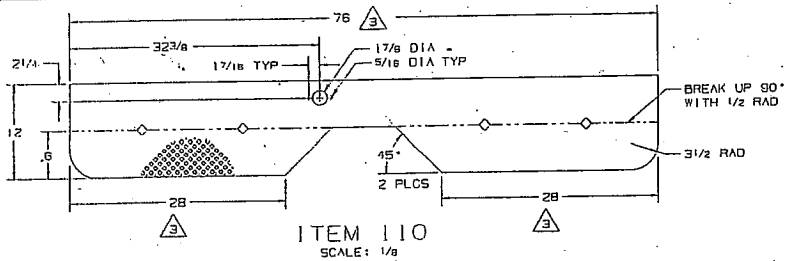

ITEM 110
SCALE: 1/8

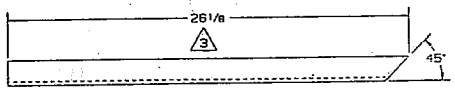

ITEM 105
SCALE: 1/4

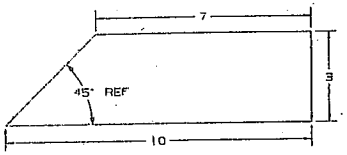

ITEM 102
SCALE: 1/2

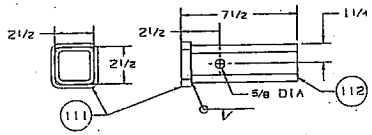

ITEM 111 & 112
SCALE: 1/4

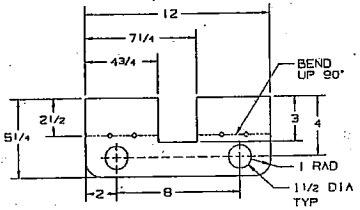

ITEM 113
SCALE: 1/4

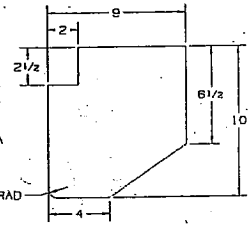

ITEM 108
SCALE: 1/4

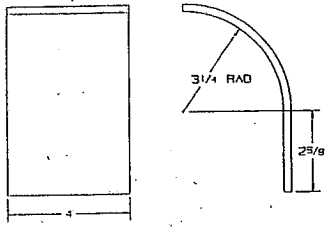

ITEM 103
SCALE: 1/2

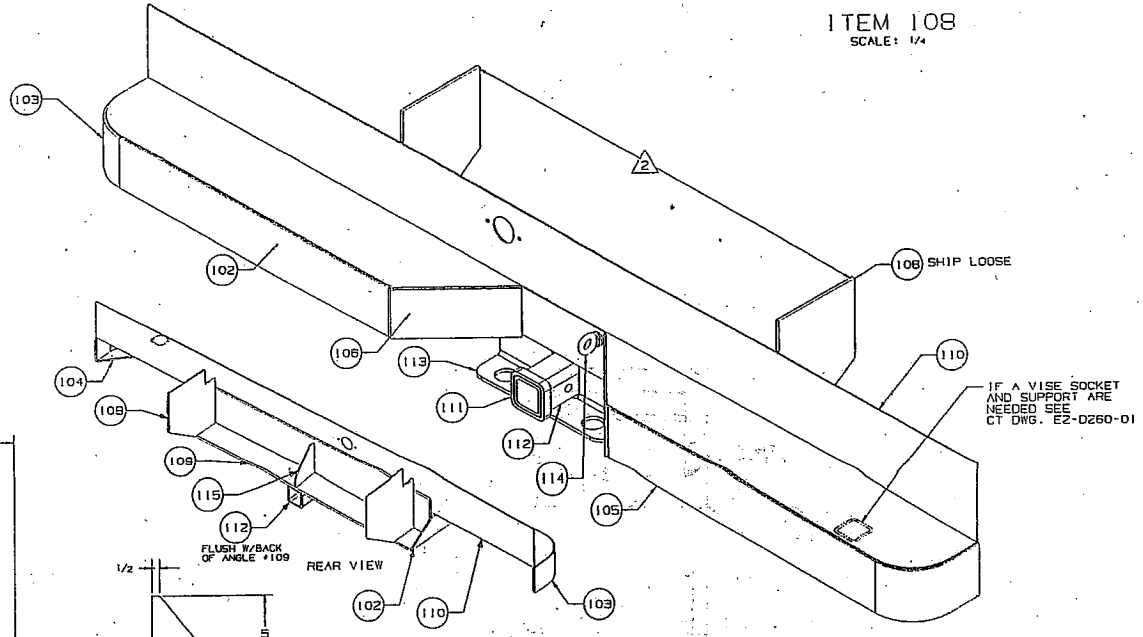

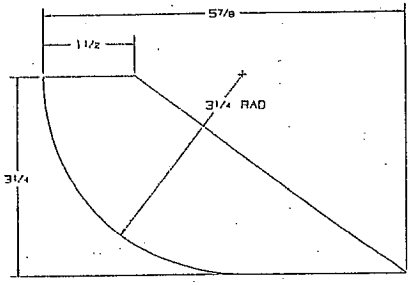

ITEM 104
SCALE: FULL

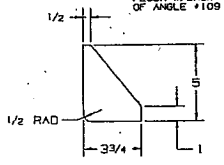

ITEM 115
SCALE: 1/4

BILL OF MATERIALS

ITEM	QTY	DESCRIPTION
101	1	WELDED ASSEMBLY C/O ITEMS 102-115
102	2	1/4 x 3 x 10 FLAT BAR
103	2	1/4 x 4 x 75/8 FLAT BAR
104	2	1/4 x 3 1/4 x 6 STEEL FLAT BAR
3 105	2	4 x 5.4 LB/FT x 26 1/8 STEEL CHANNEL
106	2	1/4 x 4 x 8 3/8 FLAT BAR
108	2	1/4 x 8 x 10 STEEL PLATE
109	1	4 x 6 x 5/16 x 47 1/2 STEEL ANGLE
3 110	1	14 GA x 12 x 76 STEEL DIAMOND PLATE
111	1	3 x .250W x 5/8 LG STL SQ TUBG
112	1	2 1/2 x .250W x 7 1/2 LG SEAMLESS STL SQ TUBG
113	1	1/4 x 5 1/4 x 12 LG HRS FLATBAR
114	1	EYE, WELD-ON CAMPBELL # 710-5302
115	1	1/4 x 3 3/4 x 5 LG HRS FLATBAR

NOTES:

1. ALL JOINTS TO BE WELDED CONTINUOUS UNLESS OTHERWISE SPECIFIED. SIZE OF ALL WELDS TO BE AT LEAST HALF THE THICKNESS OF THE THINNER OF THE ADJACENT METALS.

2. THIS DIMENSION TO BE DETERMINED AT ASSEMBLY TO CAB AND CHASSIS.

3. WHEN THE BUMPER IS TO BE FURNISHED WITH A BODY, THE BUMPER WIDTH SHALL MATCH THE TRUCK BODY WIDTH.

PE 32-12-5367

REV	DATE	DESCRIPTION	BY
N	09/04	CHANGED 109 FROM 40 LONG	JDR
M	Mar-02	ADDED VISE SOCKET AND SUPPORT NOTE	J Payne
L	5/01	ADDED 1/8 TO ITEMS 103, 104 &105. ADDED ITEMS 111-115	DOWNIN
K	5/92	MOVED DIMENSION ON ITEM 110	RODGERS
J	10/00	ADDED NOTE 3	G.C.C.
I	10/90	CHANGED 106 FROM .25 LONG	M.WHITE
H	1/89	CHANGED DRAWING TITLE	GIROUX
G	9/88	ADDED STK# & NEXT ASSY.	JONES
F	11/87	REDESIGNED AND REDRAWN	COLLIER

CT. STK.. # 051-2039

NEXT ASSEMBLY
CH-'87 & EARLIER
DODGE-ALL
FORD-ALL

STATE OF CALIFORNIA
DEPARTMENT OF TRANSPORTATION
EQUIPMENT DIVISION

REAR BUMPER - SMALL UTILITY BODY

TOLERANCE UNLESS OTHERWISE SPECIFIED: DECIMAL ± , FRACTIONAL ± , ANGULAR ± 1°

SCALE AS NOTED | DATE 11/4/87 | E2-0119-01
DRAWN COLLIER | DESIGNED CAL S.
CHECKED D. NICHOLS | APPROVED HERBERT | SHEET 1 OF 1 SHEETS

BILL OF MATERIALS

ITEM	QTY	DESCRIPTION
101	1	ASSEMBLY C/O ITEMS 102-106
102	2	3 x 3 x 3/16 x 4 LG. STD. STL. ANGLE
103	1	1 NOM-SCHD 80 x 36 LG. STL PIPE UNCOATED
104	2	3/8-16 UNC x 2 1/2 LG. BOLT W/LOCKNUT
105	1	1 x 1 x 1/8 x 12 LG. STD. STL. ANGLE
106	1	3/8 x 2 3/8 x LOXALL PIN STK #905-1039

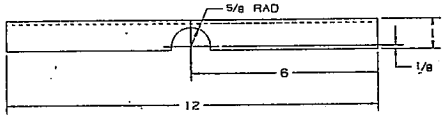

ITEM 105

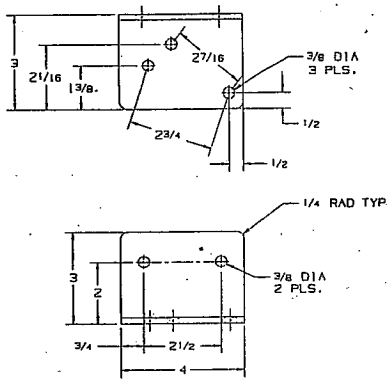

ITEM 102
LEFT SIDE SHOWN
RIGHT SIDE OPPOSITE

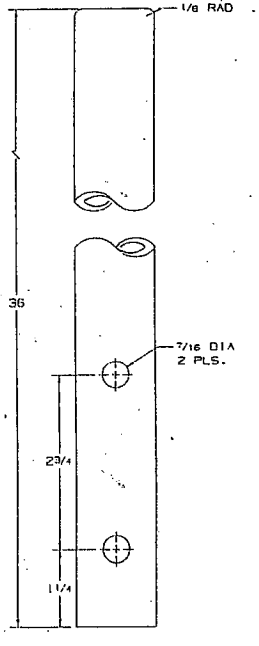

ITEM 103
FULL SCALE

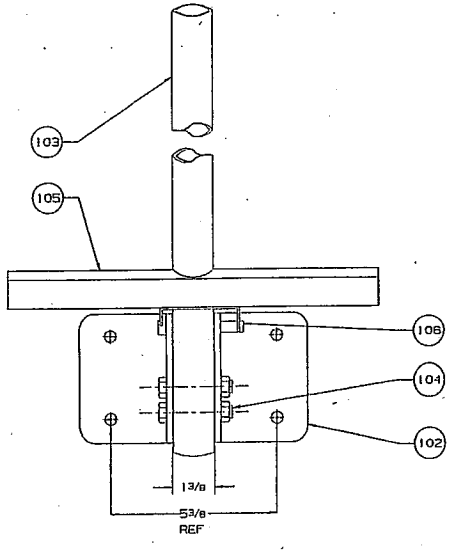

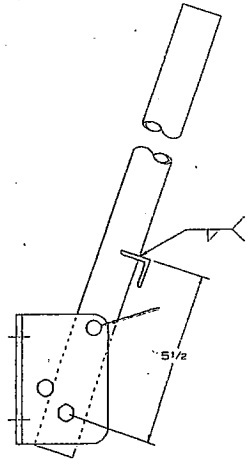

ITEM 101 △2

NOTES:

1. ALL JOINTS TO BE WELDED CONTINUOUS UNLESS OTHERWISE SPECIFIED. SIZE OF ALL WELDS TO BE AT LEAST THE THICKNESS OF THE THINNER OF THE ADJACENT METALS.
2. △2 MOUNT ASSEMBLY SUCH THAT BASE OF CONES CLEARS TOP OF BUMPER.
3. ALL WELDS, ELECTRICAL AND PAINT WILL BE IN COMPLIANCE WITH CALTRANS EQUIPMENT QUALITY STANDARDS. GO TO www.dot.ca.gov/hq/eqsc TO VIEW EQUIPMENT QUALITY STANDARDS.

PE 32-12-5367

REV	DATE	DESCRIPTION	BY
L	02/04	DREW ITEM 103 TO FULL SCALE	DOWNIN
K	01/02	ADDED NOTE 3	JDR
J	05/01	ITEM #103 CHG'D TO UNCOATED	JDR
I	01/00	CHG'D 1 1/4 TO 1 3/8 ITEM 101	JDR
H	03/92	#103 WAS SCH.40	PEELER
G	10/91	ITEM 103 WAS 3/4 NOM SCHED 80. CHANGED POSITION OF ITEM 105, WAS 43/4.	RODGERS
F	07/91	VIEW #103 SHOWED LENGTH AS 39"	PEELER
E	5/91	REDIMENSIONED ITEM 102 & REMOVED "HALF" FROM WELD NOTE 1.	RODGERS
D	9/90	ADDED TO CAD/CAM SYSTEM	E.D.E.

NEXT ASSEMBLY

STATE OF CALIFORNIA
DEPARTMENT OF TRANSPORTATION
EQUIPMENT DIVISION

TWO POSITION CONE HOLDER

CT STK. #051-1748

TOLERANCES UNLESS OTHERWISE SPECIFIED: DECIMAL ± FRACTIONAL ± 1/16 ANGULAR ±

SCALE 1/2 | DATE 11/78 | E2-D129-01

DRAWN EERNISSE | DESIGNED J.B. | SHEET 1 OF 1 SHEETS

CHECKED CHALPIN | APPROVED NICHOLS

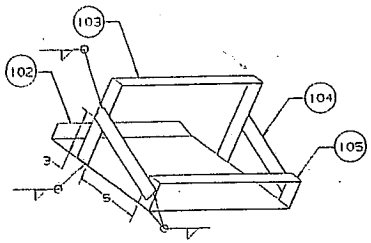

ITEM 101
1-TON RACK
NOTE: FITS 5" CHOCK BLOCKS - CT STK #051-3243

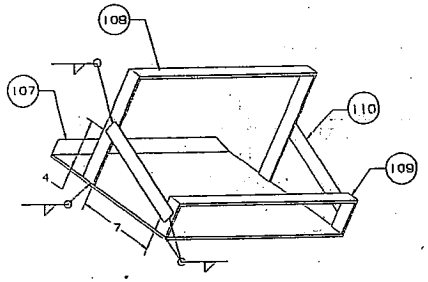

ITEM 106
2-TON & LARGER RACK
NOTE: FITS 8" CHOCK BLOCKS - CT STK #051-3244

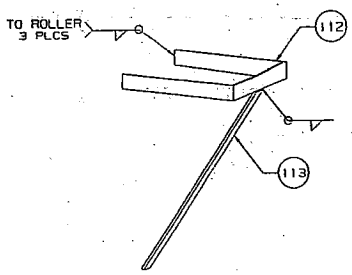

ITEM 111
ROLLER RACK

BILL OF MATERIALS		
ITEM	QTY.	DESCRIPTION
101	1	WELDED ASSY C/O 102-105, CT STK #051-2150
102	1	14 GA x 10 1/2 x 143/8 HRS STRIP
103	1	3/16 x 1 x 26 1/2 HRS STRIP
104	2	3/16 x 1 x 7 HRS STRIP
105	1	3/16 x 1 x 18 HRS STRIP
106	1	WELDED ASSY C/O 107-110 CT STK #051-2149
107	1	14 GA x 12 x 18 HRS STRIP
108	1	3/16 x 1 x 34 HRS STRIP
109	1	3/16 x 1 x 22 5/8 HRS STRIP
110	2	3/16 x 1 x 8 HRS STRIP
111	1	WELDED ASSY C/O 112 & 113
112	1	3/16 x 1 x 24 HRS STRIP
113	1	3/16 x 1 x 15 HRS STRIP
114	1	14 GA x 15 1/2 x 17 1/2 HRS STRIP

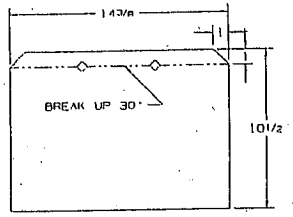

ITEM 102

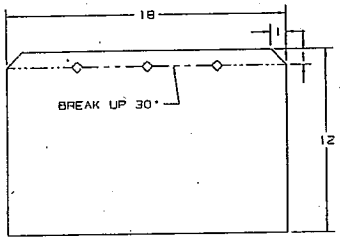

ITEM 107

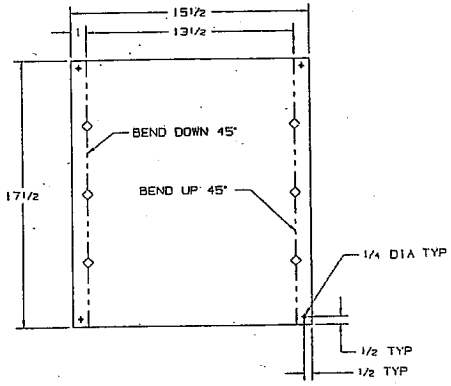

ITEM 114
IN BASKET RACK

NOTES:
1. ALL JOINTS TO BE WELDED CONTINUOUS UNLESS OTHERWISE SPECIFIED. SIZE OF ALL WELDS TO BE AT LEAST THE THICKNESS OF THE THINNER OF THE ADJACENT METALS.
2. RACKS TO BE MOUNTED ON DRIVER'S SIDE OF TRUCK.
3. ALL WELDS, ELECTRICAL AND PAINT WILL BE IN COMPLIANCE WITH CALTRANS EQUIPMENT QUALITY STANDARDS. GO TO www.dot.ca.gov/hq/eqsc TO VIEW EQUIPMENT QUALITY STANDARDS.

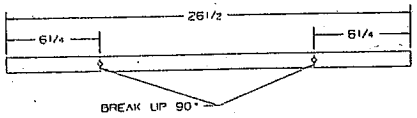

ITEM 103

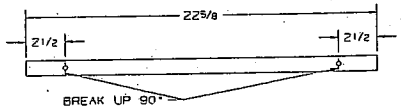

ITEM 109

PE 32-12-5367

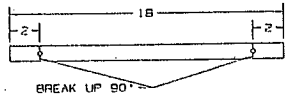

ITEM 105

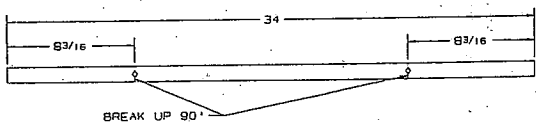

ITEM 108

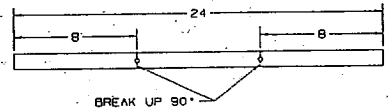

ITEM 112

REV	DATE	DESCRIPTION	BY
J	02/05	ADDED CT STK NOS. FOR WHEEL CHOCKS TO ITEMS 101 & 108	SPARTZ
I	04/97	ADDED ITEM #114	JDR
H	12/93	CHG'D ASSY WORDING IN BILL OF MATERIALS & ADDED TITLES TO ASSEMBLYS.	FLOWER
G	05/92	CHG'D ITEM 103 FROM 26 AND ITEM 108 FROM 33 5/8. REMOVED 'HALF' FROM WELD NOTE.	RODGERS
F	06/90	CHG'D ITEM 103 FROM 28 TO 26	D.JONES
E	03/90	REDRAWN ON CAD	D.JONES

CT STK #051-2150 (ITEM 101)
CT STK #051-2149 (ITEM 106)
CT STK #051-2811 (ITEM 114)

NEXT ASSEMBLY

STATE OF CALIFORNIA
DEPARTMENT OF TRANSPORTATION
DIVISION OF EQUIPMENT

CHOCK BLOCK RACKS

TOLERANCE UNLESS OTHERWISE SPECIFIED: DECIMAL ± .; FRACTIONAL ± 1/16; ANGULAR ± 3°

SCALE 1/4 | DATE 01/19/84 | E2-0143-01
DRAWN D.NICHOLS | DESIGNED CAL
CHECKED D.JAMES | APPROVED J.MARLOW

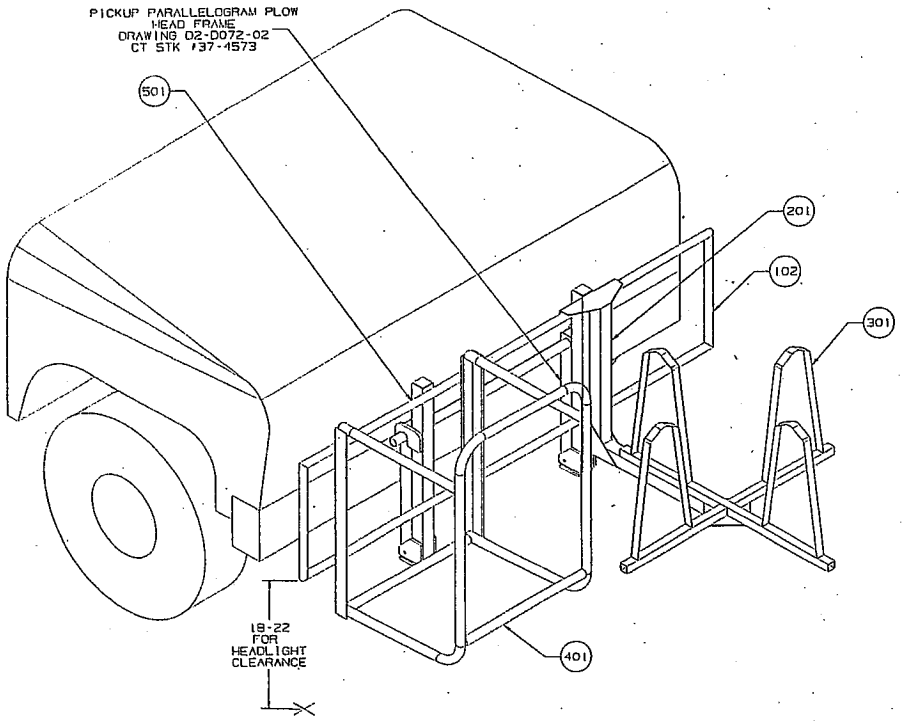

BILL OF MATERIALS

ITEM	QTY	DESCRIPTION
101	1	CONE CAROUSEL & PERSONNEL BASKET INSTALLATION
102	1	WELDED ASSY C/O 103 & 104
103	2	1 NOM x SCH 80 x 191/4 LG STL PIPE UNCOATED
104	2	1 NOM x SCH 80 x (2) LG STL PIPE UNCOATED

NOTES:

1. ALL JOINTS TO BE WELDED CONTINUOUS UNLESS OTHERWISE SPECIFIED. SIZE OF ALL WELDS TO BE AT LEAST THE THICKNESS OF THE THINNER OF THE ADJACENT METALS.

(2) CT STK #051-2283 SHALL BE 76 INCHES LONG. INSTALL ON ONE TON AND SMALLER UNITS.

CT STK #051-1484 SHALL BE 82 INCHES LONG. INSTALL ON UNITS LARGER THAN ONE TON.

3. GRIND AND DEBURR ALL SHARP CORNERS.

4. ALL WELDS, ELECTRICAL AND PAINT WILL BE IN COMPLIANCE WITH CALTRANS EQUIPMENT QUALITY STANDARDS. GO TO www.dot.ca.gov/hq/eqsc TO VIEW EQUIPMENT QUALITY STANDARDS.

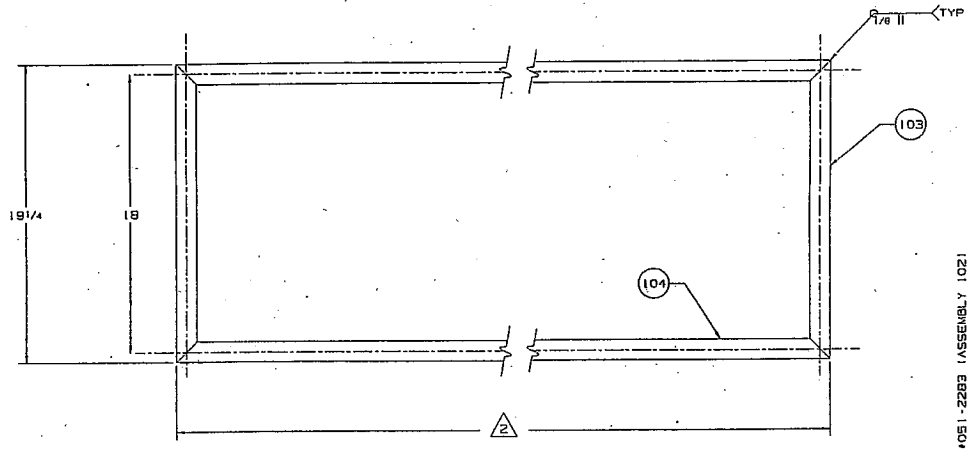

ASSEMBLY 102

PE 32-12-5367

REV	DATE	DESCRIPTION	BY
P	10/02	UPDATED NOTE 2	WHEELER
O	01/01	ITEM 103 & 104 UNCOATED PIPE	JDR
N	05/00	SEE SHEET 5	FLOWER
M	09/99	WAS SCHEDULE 80 PIPE	G.T.H.
L	01/97	NEW SHEET 5, GENERIC PU PLOW HEAD FRAME TO MOUNT PUSH BUMPER OR CONE SEITING RACK.	FLOWER
K	06/96	CHG'D NOTE 2 FROM 74 TO 76	JDR
J	04/96	CHG'D RACK TO GROUND HEIGHT	JDR
I	2/96	REDRAWN ON CAD. RENUMBERED SHEETS. REMOVED FRAME MOUNTING VIEWS, WAS 1 OF 7.	FLOWER

NEXT ASSEMBLY

TOLERANCE-UNLESS OTHERWISE SPECIFIED
DECIMAL ±
FRACTIONAL ± 1/16
ANGULAR ± 1°
DRILLED HOLES ±
REAMED HOLES ±

STATE OF CALIFORNIA
DEPARTMENT OF TRANSPORTATION
OFFICE OF EQUIPMENT

CONE CARRIER INSTALLATION

SCALE	1/4	DATE	8/8/88	E2-0144-01
DRAWN	JONES	DESIGNED	STAFF	
CHECKED		APPROVED		SHEET 1 OF 5 SHEETS

CT STK #051-2283 (ASSEMBLY 102)
CT STK #051-1484 (ASSEMBLY 102)

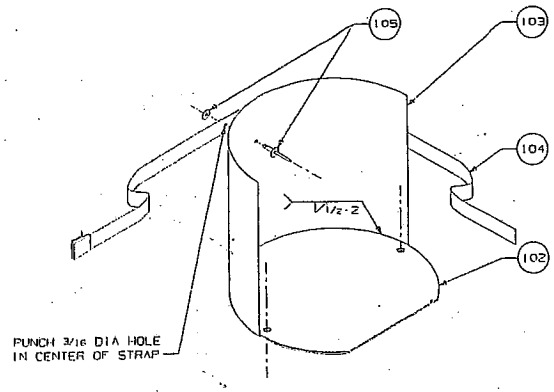

ASSY 101
SCALE : 1/4

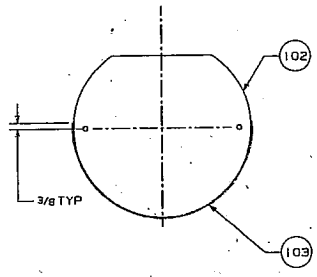

TOP VIEW
SCALE : 1/4

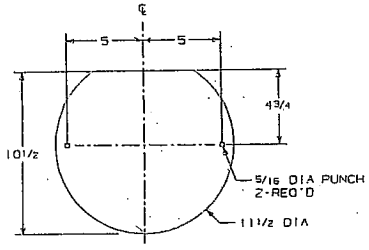

ITEM 102
SCALE : 1/4

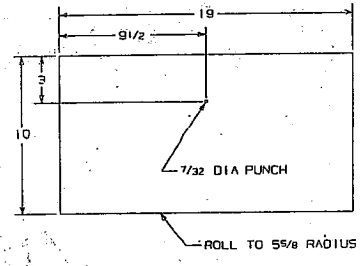

ITEM 103
SCALE : 1/4

BILL OF MATERIALS

ITEM	QTY	DESCRIPTION
101	1	WELDED ASSY CONSISTS OF 102 TO 103
102	1	12 GA x 11 1/2 DIA SHEET STEEL
103	1	14 GA x 10 x 19 LG SHEET STEEL (ROLL)
104	1	1 1/2 (MIN) x 44 LG BLACK NYLON STRAP W/ CAM LOCK TYPE METAL BUCKLE CT# 051-1947 REF: TARPS & TIE-DOWNS, HAYWARD, CA (510) 782-8772 PART ID# BUCKLE&STRAP 44"OAL
105	1	3/16 LARGE BUTTNHD ALUM POP RIVET W/ BACKUP WASHER CT STK #906-4848 GRAINGER# 4BL66A

NOTES:

1. ALL JOINTS TO BE WELDED CONTINUOUS UNLESS OTHERWISE SPECIFIED. SIZE OF ALL WELDS TO BE AT LEAST THE THICKNESS OF THE THINNER OF THE ADJACENT METALS.
2. ALL WELDS, ELECTRICAL AND PAINT WILL BE IN COMPLIANCE WITH CALTRANS EQUIPMENT QUALITY STANDARDS. GO TO www.dot.ca.gov/hq/eqsc TO VIEW EQUIPMENT QUALITY STANDARDS.

PE 32-12-5367

REV	DATE	DESCRIPTION	BY
D	09/01	ADDED VENDOR & PART ID INFO. TO ITEMS 104 & 105	DOWNIN
C	10/95	#103 HOLE WAS 3/16 DIA	PEELER
B	06/94	CHG'D ITEM 105 & ADDED CT STK#	JDR
A	01/94	ADDED TOP VIEW	JDR

NEXT ASSEMBLY

STATE OF CALIFORNIA
DEPARTMENT OF TRANSPORTATION
DIVISION OF EQUIPMENT

SMALL WATER CAN HOLDER

TOLERANCE UNLESS OTHERWISE SPECIFIED: DECIMAL ± .XX; FRACTIONAL ± 1/32; ANGULAR ± 1°

SCALE AS NOTED | DATE 05/16/03 | E2-0223-01

DRAWN J. RIME | DESIGNED CAL E. | CHECKED GIROUX | APPROVED NICHOLS | SHEET 1 OF 1 SHEETS

CT STK# 051-1946

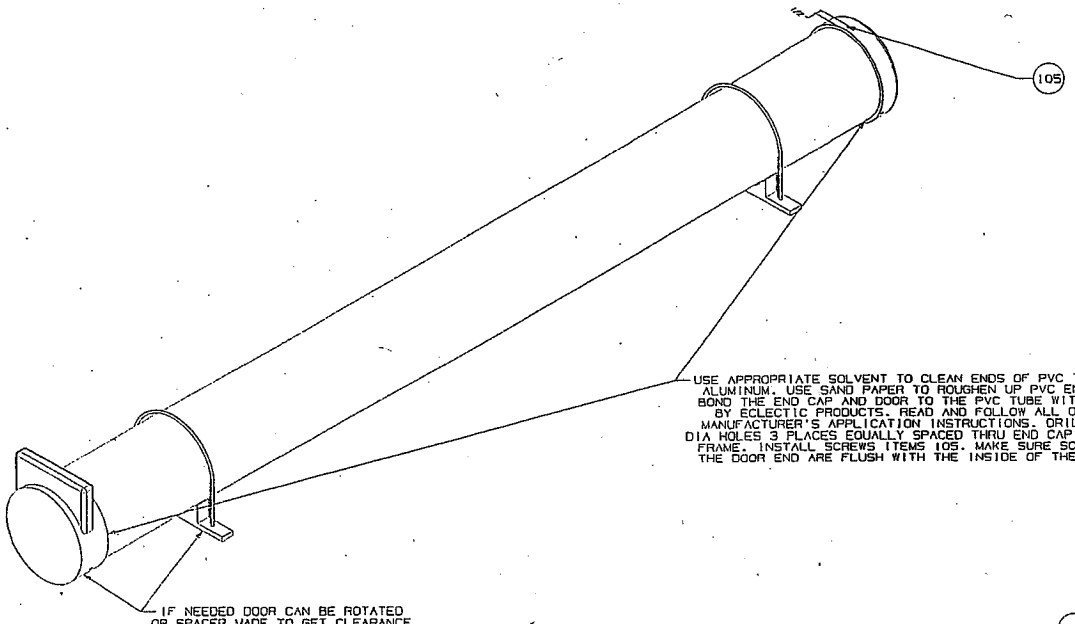

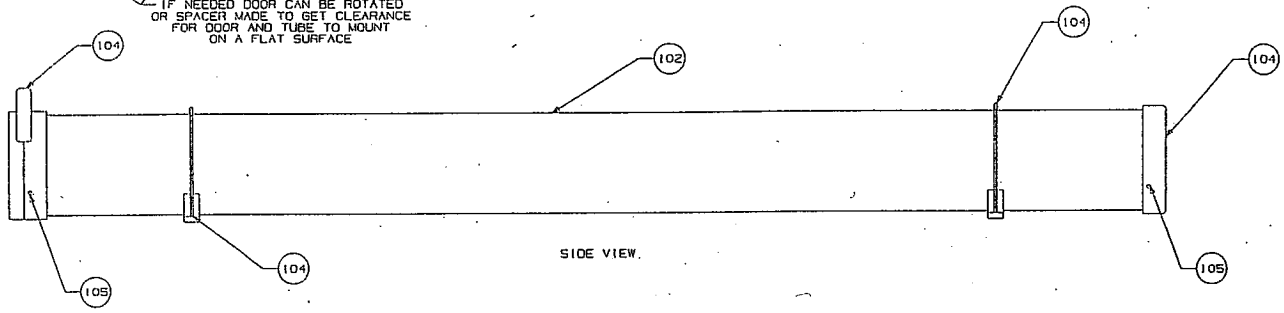

SIDE VIEW.

BILL OF MATERIALS

ITEM	QTY	DESCRIPTION
101	1	ASSY. CONSISTS OF 102-104
102	1	6" EMT CONDUIT, SCH 40 x 74" L. PVC, GRAY UV RESISTANT. REF. GRANITE ELCTRICAL SUPPLY 916-648-3900
104	1	6" CAST ALUM KIT. DOOR, END CAP, SADDLE AND U BOLTS. BLAYLOCK IND. #TCK6 PVC
105	6	PLASTITE SCREW, STEEL, ZINC PLATED, 10-14 X 1/2" Lg., PAN HEAD PHILIPS. McMASTER-CARR #90380A242

NOTE:

1. ALL WELDS, ELECTRICAL AND PAINT WILL BE IN COMPLIANCE WITH CALTRANS EQUIPMENT QUALITY STANDARDS. GO TO www.dot.ca.gov/hq/eqsc TO VIEW EQUIPMENT QUALITY STANDARDS.

C.T STOCK #1051-3274 ITEM 101

PE 32-12-5367

REV	DATE	DESCRIPTION	BY
C	6/06	CHANGED MATERIAL TO GREY PVC CONDUIT	JOHNSON
B	Sep 04	REMOVED ITEM 103 END CAP, COMES IN ITEM 104 KIT	J Payne
A	MAR 04	ITEM 104 WAS WEATHERGUARD #239, REMOVED ITEMS 105,106 & 107. ADDED NEW ITEM 105	J Payne

NEXT ASSEMBLY

STATE OF CALIFORNIA
DEPARTMENT OF TRANSPORTATION
EQUIPMENT SERVICE CENTER

TOLERANCE UNLESS OTHERWISE SPECIFIED
DECIMAL ±
FRACTIONAL ±
ANGULAR ±
DRILLED HOLES ±
REAMED HOLES ±

SIGN TUBE
SINGLE, 6" DIAMETER

SCALE	NONE	DATE	08/14/00	E2-0254-01
DRAWN	J.MATSUO	DESIGNED	WHEELER	
CHECKED		APPROVED		SHEET 1 OF 1 SHEETS

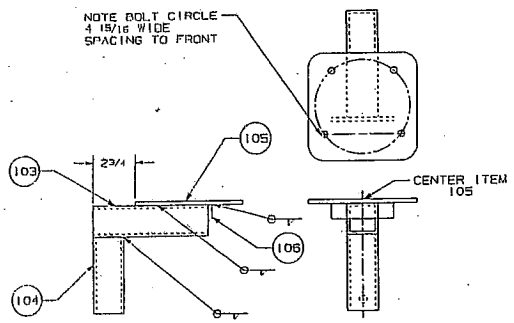

ITEM 102

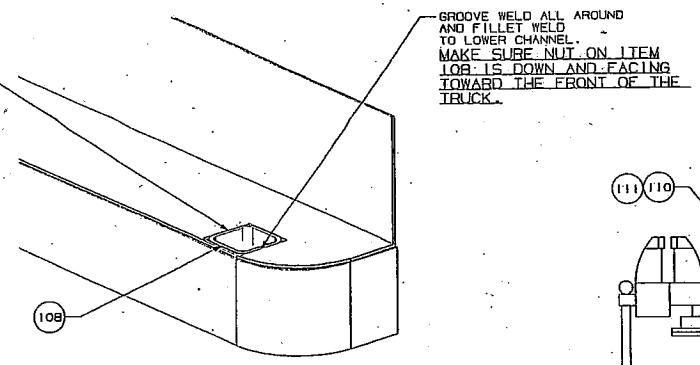

TYPICAL STEP BUMPER

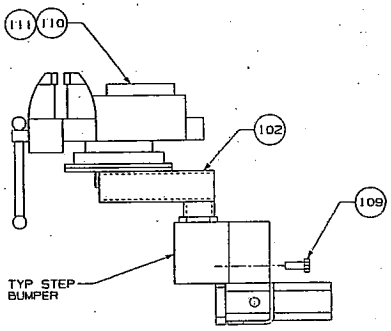

ITEM 101

BILL OF MATERIALS		
ITEM	QTY	DESCRIPTION
101	1	VISE MOUNTING KIT, ITEM 102, 108, 109, 110, 111
102	1	VISE SUPPORT, ITEM 103, 104, 105, 106
103	1	2 x 2 x 3/16 t x 7 1/2 lg. SQ TUBE, STL, A500 GR. B
104	1	2 x 2 x 3/16 t x 5 lg. SQ TUBE, STL, A500 GR. B
105	1	1/4 t x 7 x 7 lg. H.R. STL. FLAT. A-36
106	1	1/4 t x 1 x 4 lg. H.R. STL. FLAT. A-36
107	1	1/2-13 UNC HEX NUT, GRADE B
108	1	2 1/2 x 2 1/2 x 3/16 t x 3 3/4 lg. SQ TUBE, STL, A500 GR. B
109	1	1/2-13 UNC X 1 1/4" HEX BOLT, WASHER AND LOCK WASHER, GRADE B
110	4	3/8-16 UNC X 2" HEX BOLT; WASHER AND NYLOCK NUT, GRADE B
111	1	VISE, UTILITY, WILTON 675, CT# 908-1083

NOTES:
1. ALL WELDS, ELECTRICAL AND PAINT WILL BE IN COMPLIANCE WITH CALTRANS EQUIPMENT QUALITY STANDARDS. GO TO www.dot.ca.gov/hq/eqsc TO VIEW EQUIPMENT QUALITY STANDARDS.
2. ALL JOINTS TO BE WELDED CONTINUOUS UNLESS OTHERWISE SPECIFIED. SIZE OF ALL WELDS TO BE AT LEAST THE THICKNESS OF THE THINNER OF THE ADJACENT METALS. WELDS TO BE UNIFORM AND NEAT IN APPEARANCE.
3. DEBURR AND GRIND ALL SHARP EDGES

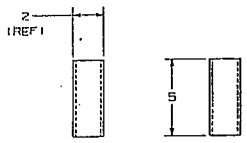

ITEM 104

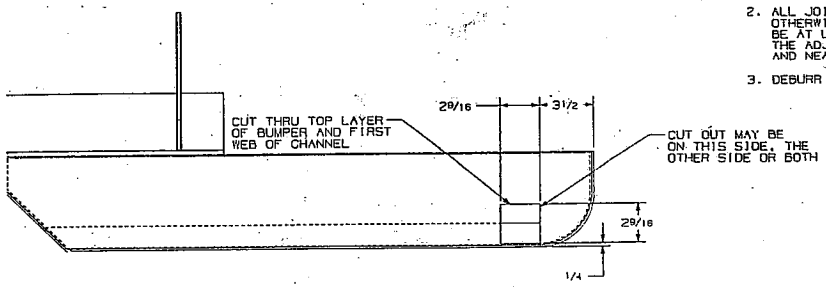

TYPICAL STEP BUMPER
TOP VIEW

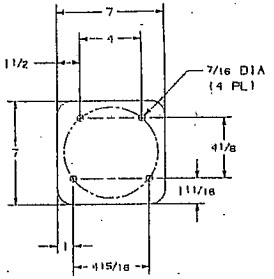

ITEM 105

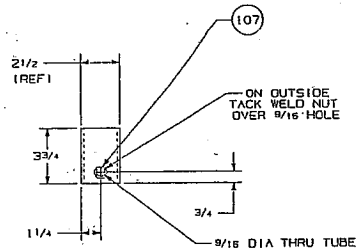

ITEM 108

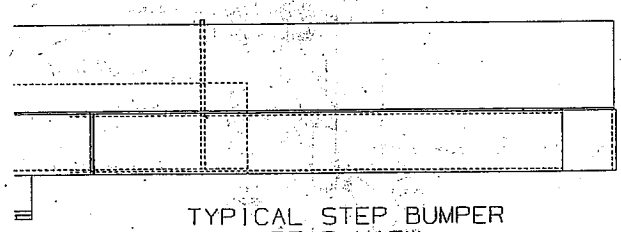

TYPICAL STEP BUMPER
REAR VIEW

PE 32-12-5367

REV	DESCRIPTION	BY

NEXT ASSEMBLY	STATE OF CALIFORNIA DEPARTMENT OF TRANSPORTATION	
	DIVISION OF EQUIPMENT	
TOLERANCE UNLESS OTHERWISE SPECIFIED DECIMAL ± .x FRACTIONAL ± 1/32 ANGULAR ± .x ° DRILLED HOLES ± REAMED HOLES ±	STEP BUMPER MOD, VISE BRACKET AND INSTALLATION	
	SCALE 1/4 DATE 30 JAN 02	E2-D260-01
	DRAWN J Payne DESIGNED M	
	CHECKED APPROVED	SHEET 1 OF 1 SHEETS

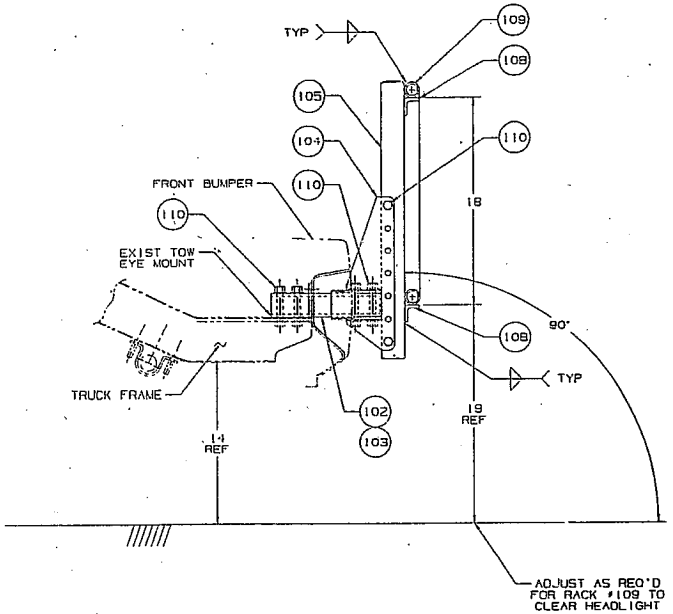

2WD ASSEMBLY 101

LEFT SIDE-SHOWN

SCALE : 3/16

(RANGE 19 TO 22)

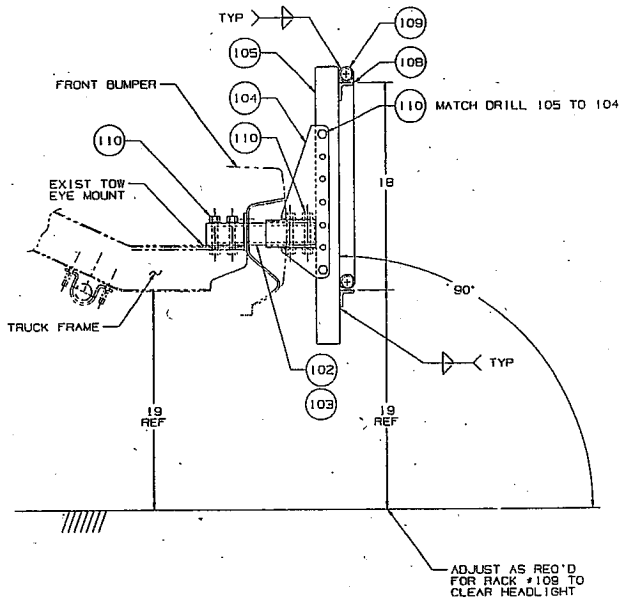

4WD ASSEMBLY 101

LEFT SIDE-SHOWN

SCALE : 3/16

(RANGE 19 TO 22)

BILL OF MATERIALS		
ITEM	QTY.	DESCRIPTION
101	2	ASSY C/O 102 TO 110
102	1	FRONT FRAME MOUNT CT STK #051-3390 RIGHT SIDE DWG #F1-08-008-FD-FM2
103	1	FRONT FRAME MOUNT CT STK #051-3391 LEFT SIDE DWG #F1-08-008-FD-FM2
104	2	CONE CARRIER MOUNT CT STK #051-3392 DWG #F1-08-008-FD-FM1
105	2	WLD'D ASSY C/O 106 TO 108
106	2	2 x 2 x .188 x 24 LG STL SQ TUBG
CAP 107	4	12 GA x 1 3/4 x 1 3/4 LG HR SHEET STL (CAP)
108	4	1 1/2 x 1 1/2 x 1/4 x 2 LG STL ANGLE
109	1	CONE CARRIER RACK CT STK #051-2283 DWG #E2-0144-01
110	14	1/2-13UNC x 3 1/2 LG HEX HD BOLT (GRADE 8) W/ SAE FLAT WASHERS AND NYLON LOCK NUT

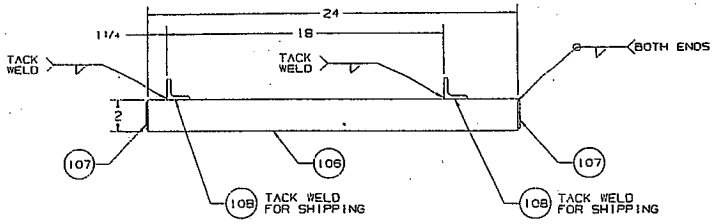

ITEM 105

SCALE : 1/4

CT STK #051-3393

BLACK PRIMER

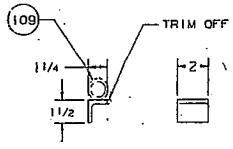

ITEM 108

SCALE : 1/4

NOTES:

1. ALL WELDS, ELECTRICAL AND PAINT WILL BE IN COMPLIANCE WITH CALTRANS EQUIPMENT QUALITY STANDARDS. GO TO www.dot.ca.gov/hq/eqsc TO VIEW EQUIPMENT QUALITY STANDARDS.
2. REMOVE ALL BURRS AND SHARP EDGES.
3. ALL JOINTS TO BE WELDED CONTINUOUS UNLESS OTHERWISE SPECIFIED. SIZE OF ALL WELDS TO BE AT LEAST THE THICKNESS OF THE THINNER OF THE ADJACENT METALS. WELDS TO BE UNIFORM AND NEAT IN APPEARANCE.

CT STK #051-3393 ASSY 105

PE 32-12-5367

REV	DATE	DESCRIPTION	BY
A	12/07	UPDATED ITEM 104	DOWNIN

NEXT ASSEMBLY

STATE OF CALIFORNIA
DEPARTMENT OF TRANSPORTATION
DIVISION OF EQUIPMENT

CONE CARRIER RACK MOUNT & INSTALLATION
08 FORD F-SERIES 2WD AND 4WD

SCALE AS NOTED	DATE 10/29/07	F1-08-008FD CC
DRAWN J. RIVE	DESIGNED RIVE	
CHECKED	APPROVED	SHEET 1 OF 1 SHEETS

TOLERANCE UNLESS OTHERWISE SPECIFIED
ORIGINAL ± NA
FRACTIONAL ± 1/32
ANGULAR ± 1°

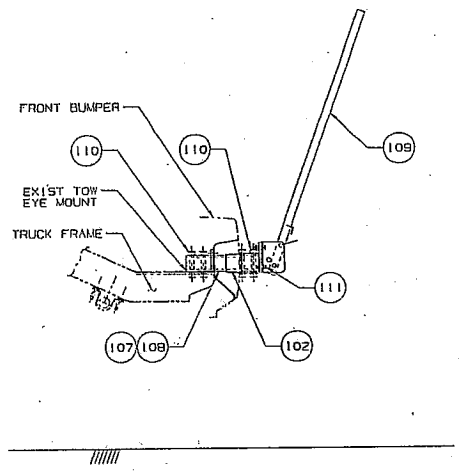

CONE HOLDER INSTALLATION
LEFT SIDE-SHOWN
SCALE : 1/8

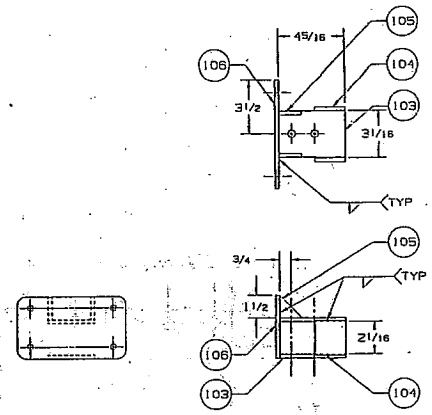

ITEM 102
SCALE : 1/4

BILL OF MATERIALS

ITEM	QTY	DESCRIPTION
102	1	WLD'D ASSY C/O 103 TO 106
103	2	1/4 x 3 x 45/16 LG HRS PLATE
104	2	1/4 x 2 x 25/16 LG HRS PLATE
105	2	1/4 x 1 1/2 x 1 1/2 LG HRS PLATE
106	1	1/4 x 4 3/4 x 13 1/2 LG HRS PLATE
107	1	FRONT FRAME MOUNT CT STK #051-3390 RIGHT SIDE DWG #F1-08-008-FD-FM2
108	1	FRONT FRAME MOUNT CT STK #051-3391 LEFT SIDE DWG #F1-08-008-FD-FM2
109	1	CONE HOLDER CT STK #051-1748 DWG #E2-0129-01
110	5	1/2-13UNC x 3 1/2 LG HEX HD BOLT (GRADE 8) W/ SAE FLAT WASHERS AND NYLON LOCK NUT
111	4	3/8-16UNC x 1 1/2 LG HEX HD BOLT (GRADE 8) W/ SAE FLAT WASHERS AND NYLON LOCK NUT

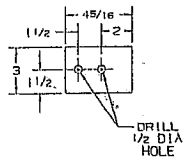

ITEM 103
SCALE : 1/4

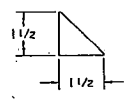

ITEM 105
SCALE : 1/2

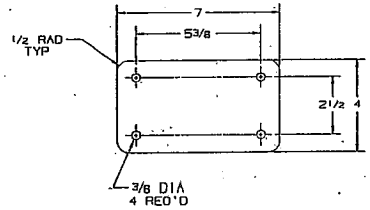

ITEM 106
SCALE : 3/8

NOTES:

1. ALL WELDS, ELECTRICAL AND PAINT WILL BE IN COMPLIANCE WITH CALTRANS EQUIPMENT QUALITY STANDARDS. GO TO www.dot.ca.gov/hq/eqsc TO VIEW EQUIPMENT QUALITY STANDARDS.
2. REMOVE ALL BURRS AND SHARP EDGES.
3. ALL JOINTS TO BE WELDED CONTINUOUS UNLESS OTHERWISE SPECIFIED. SIZE OF ALL WELDS TO BE AT LEAST THE THICKNESS OF THE THINNER OF THE ADJACENT METALS. WELDS TO BE UNIFORM AND NEAT IN APPEARANCE.

PE 32-12-5367

CT STK #051-3394 #102

REV	DATE	DESCRIPTION	BY
A	11/07	REMOVED ITEM 101	DOWNIN

NEXT ASSEMBLY

STATE OF CALIFORNIA
DEPARTMENT OF TRANSPORTATION
DIVISION OF EQUIPMENT

CONE HOLDER MOUNT BRACKET
08 FORD F-SERIES 2WD AND 4WD

TOLERANCE-UNLESS OTHERWISE SPECIFIED
DECIMAL ± NA
FRACTIONAL ± 1/32
ANGULAR ± 1°

SCALE AS NOTED	DATE 10/26/07		F1-08-008FD-CH
DRAWN J. RIME	DESIGNED RIME		
CHECKED	APPROVED		SHEET 1 OF 1 SHEETS

BILL OF MATERIALS

ITEM	QTY	DESCRIPTION
101	1	WLD'D ASSY C/O 102 TO 104
102	2	1/4 x 3 x 4 1/2 LG HRS PLATE
103	2	1/4 x 2 x 25/16 LG HRS PLATE
104	2	1/4 x 4 1/8 x 13 1/2 LG HRS PLATE

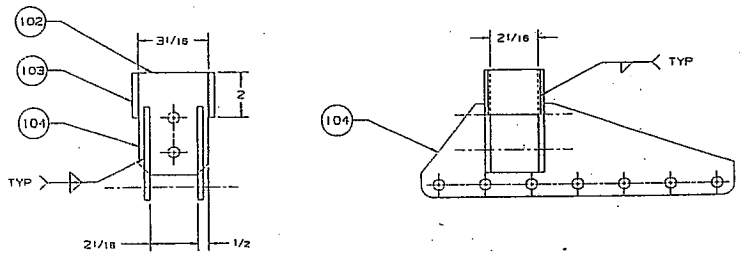

ASSEMBLY 101
SCALE : 3/8

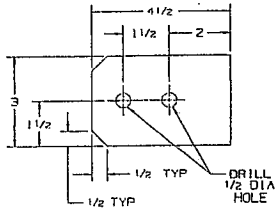

ITEM 102
SCALE : 1/2

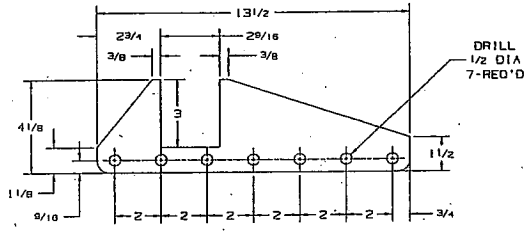

ITEM 104
SCALE : 3/8

NOTES:

1. ALL WELDS, ELECTRICAL AND PAINT WILL BE IN COMPLIANCE WITH CALTRANS EQUIPMENT QUALITY STANDARDS. GO TO www.dot.ca.gov/hq/eqsc TO VIEW EQUIPMENT QUALITY STANDARDS.
2. REMOVE ALL BURRS AND SHARP EDGES.
3. ALL JOINTS TO BE WELDED CONTINUOUS UNLESS OTHERWISE SPECIFIED. SIZE OF ALL WELDS TO BE AT LEAST THE THICKNESS OF THE THINNER OF THE ADJACENT METALS. WELDS TO BE UNIFORM AND NEAT IN APPEARANCE.

CT STK 4051-C3592 ASSY 101

PE 32-12-5367

REV	DATE	DESCRIPTION	BY
A	12/07	ITEM 104 WAS 4 1/2	DOWNIN

NEXT ASSEMBLY

STATE OF CALIFORNIA
DEPARTMENT OF TRANSPORTATION
DIVISION OF EQUIPMENT

CONE CARRIER/PUSH BUMPER BRACKET
08 FORD F-SERIES 2WD AND 4WD

SCALE AS NOTED	DATE 10/27/07	F1-08-002-FD-FM
DRAWN J. RIWE	DESIGNED RIWE	
CHECKED	APPROVED	SHEET 1 OF 2 SHEETS

TOLERANCE UNLESS OTHERWISE SPECIFIED
DECIMAL ± .06
FRACTIONAL ± 1/32
ANGULAR ± 1°

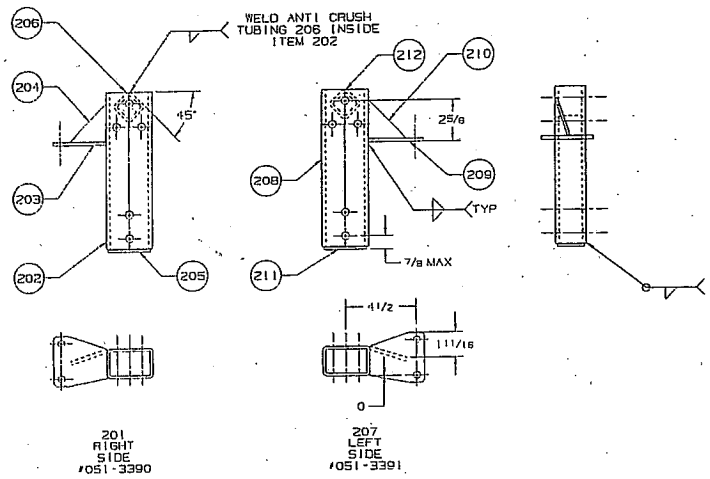

ASSY 201 AND 207

SCALE : 1/4

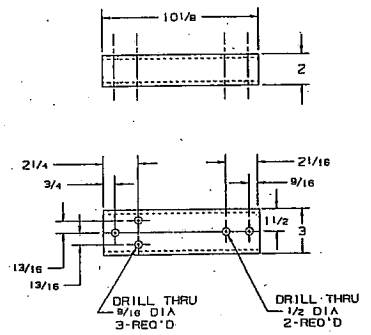

ITEM 202 AND 208

SCALE : 1/4

	ITEM	QTY	DESCRIPTION
RIGHT SIDE	201	1	WLD'D ASSY C/O 202 TO 206
	202	1	3 x 2 x .250W x 10 1/8 LG STL REC TUBG
	203	1	1/4 x 3 3/8 x 3 1/2 LG HRS PLATE
	204	1	1/4 x 2 3/8 x 2 3/8 LG HRS PLATE
	205	1	12 GA x 1 7/8 x 2 7/8 LG STL SHEET
	206	1	1 1/2 x 1 1/2 x .188W x 1 15/32 LG STL SQ TUBG
LEFT SIDE	207	1	WLD'D ASSY C/O 208 TO 212
	208	1	3 x 2 x .250W x 10 1/8 LG STL REC TUBG
	209	1	1/4 x 3 3/8 x 3 1/2 LG HRS PLATE
	210	1	1/4 x 2 3/8 x 2 3/8 LG HRS PLATE
	211	1	12 GA x 1 7/8 x 2 7/8 LG STL SHEET
	212	1	1 1/2 x 1 1/2 x .188W x 1 15/32 LG STL SQ TUBG

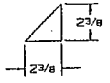

ITEM 204
AND 210

SCALE : 1/4

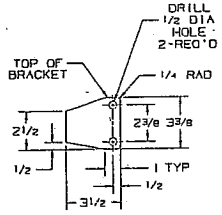

ITEM 203
AND 209

SCALE : 1/4

NOTES:

1. ALL WELDS, ELECTRICAL AND PAINT WILL BE IN COMPLIANCE WITH CALTRANS EQUIPMENT QUALITY STANDARDS. GO TO www.dot.ca.gov/hq/eqsc TO VIEW EQUIPMENT QUALITY STANDARDS.
2. REMOVE ALL BURRS AND SHARP EDGES.
3. ALL JOINTS TO BE WELDED CONTINUOUS UNLESS OTHERWISE SPECIFIED. SIZE OF ALL WELDS TO BE AT LEAST THE THICKNESS OF THE THINNER OF THE ADJACENT METALS. WELDS TO BE UNIFORM AND NEAT IN APPEARANCE.

CT STK #051-3390 ASSY 201 RIGHT SIDE
CT STK #051-3391 ASSY 207 LEFT SIDE

PE 32-12-5367

REV		DESCRIPTION	BY
NEXT ASSEMBLY		STATE OF CALIFORNIA DEPARTMENT OF TRANSPORTATION DIVISION OF EQUIPMENT	
		FRONT FRAME MOUNT BRACKET 08 FORD F-SERIES 2WD AND 4WD	
SCALE	AS NOTED	DATE 10/27/07	F1-08-008FD-FM2
DRAWN	J.RIME	DESIGNED RIME	
DETAILED		MATERIALS	SHEET 1 OF 2 SHEETS

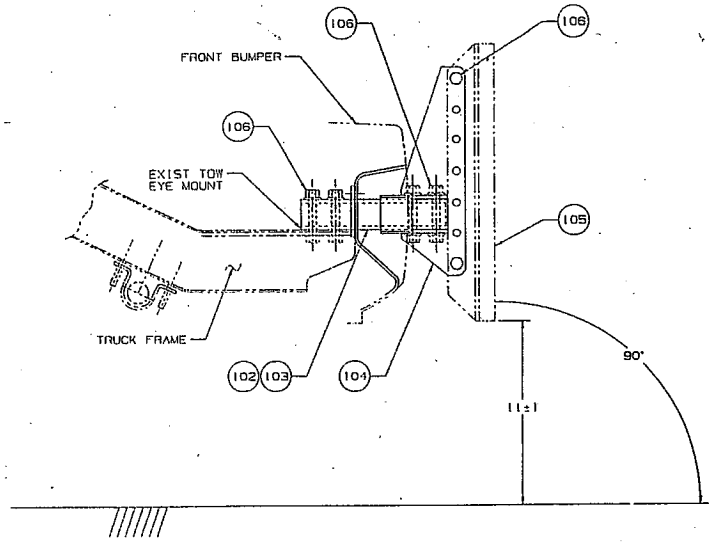

2WD ASSY 101
LEFT SIDE-SHOWN
SCALE : 1/8

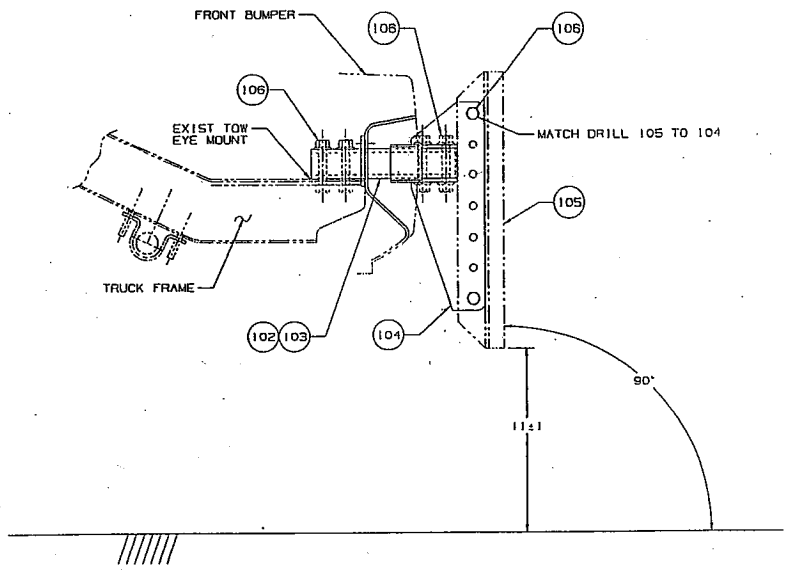

4WD ASSY 101
LEFT SIDE-SHOWN
SCALE : 1/8

BILL OF MATERIALS

ITEM	QTY	DESCRIPTION
101	1 PR	ASSY C/O 102 TO 106
102	1	FRONT FRAME MOUNT CT STK #051-3390 RIGHT SIDE DWG #F1-08-008-FD-FM2
103	1	FRONT FRAME MOUNT CT STK #051-3391 LEFT SIDE DWG #F1-08-008-FD-FM2
104	2	PUSH BUMPER MOUNT CT STK #051-3392 DWG #F1-08-008-FD-FM1
105	2	PUSH BUMPER CT STK #051-2103 DWG #E2-C105-05
106	14	1/2-13UNC x 3 1/2 LG HEX HD BOLT (GRADE 8) W/ SAE FLAT WASHERS AND NYLON LOCK NUT

NOTES:

1. ALL WELDS, ELECTRICAL AND PAINT WILL BE IN COMPLIANCE WITH CALTRANS EQUIPMENT QUALITY STANDARDS. GO TO www.dot.ca.gov/hq/eqsc TO VIEW EQUIPMENT QUALITY STANDARDS.
2. REMOVE ALL BURRS AND SHARP EDGES.
3. ALL JOINTS TO BE WELDED CONTINUOUS UNLESS OTHERWISE SPECIFIED. SIZE OF ALL WELDS TO BE AT LEAST THE THICKNESS OF THE THINNER OF THE ADJACENT METALS. WELDS TO BE UNIFORM AND NEAT IN APPEARANCE.

PE 32-12-5367

REV	DATE	DESCRIPTION	BY
A	12/07	UPDATED ITEM 104	DOWNIN

NEXT ASSEMBLY

STATE OF CALIFORNIA
DEPARTMENT OF TRANSPORTATION
DIVISION OF EQUIPMENT

PUSH BUMPER INSTALLATION
08 FORD F-SERIES 2WD AND 4WD

TOLERANCE UNLESS OTHERWISE SPECIFIED
DECIMAL ± .XX
FRACTIONAL ± 1/32
ANGULAR ± 1°

SCALE AS NOTED | DATE 10/26/07 | F1-08-008FD-FB
DRAWN J. RIVE | DESIGNED RIVE
CHECKED | APPROVED
SHEET 1 OF 1 SHEETS

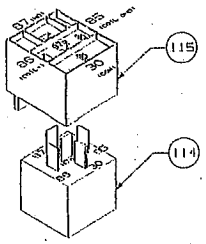

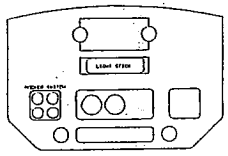

NOTES:
1. ALL WELDS, ELECTRICAL AND PAINT WILL BE IN COMPLIANCE WITH CALTRANS EQUIPMENT QUALITY STANDARDS. GO TO www.dot.ca.gov/hq/eqsc TO VIEW EQUIPMENT QUALITY STANDARDS.
2. ALL WIRE AND CABLE TO BE SECURED AND SUPPORTED EVERY 18" BY INSULATED METAL LOOP CLAMPS.
3. PLASTIC TIE WRAPS SHALL NOT BE USED AS A MEANS OF SUPPORT. THEY MAY BE USED FOR BUNDLING OR RETENTION OF MULTIPLE CONDUCTORS.
4. ALL BATTERY CABLE CONNECTIONS SHALL BE HEAVY DUTY RING STYLE LUGS, SEAMLESS COPPER, TIN PLATED, CRIMP OR SOLDER. (AMP/1S26xxx-2 or MOLEX/19221-01xxx)
5. RING TERMINALS AND BUTT SPLICES FOR 22 TO 10 GAUGE WIRES, SHALL BE SOLDERLESS INSULATED CRIMP TERMINALS DOUBLE CRIMP STYLE. TIN PLATED COPPER, UL LISTED, NYLON INSULATED, RED, BLUE, YELLOW, RATED TO 220° F. (AMP/PIDG or MOLEX/AVIKRIMP). ALL EXTERIOR OF THE CAB SPLICES AND TERMINALS SHALL BE SEALED WITH ADHESIVE LINED HEAT SHRINK TUBING.
6. ALL EXTERIOR OF THE CAB EXPOSED ELECTRICAL TERMINAL STUDS OR SCREWS SHALL BE COATED WITH LIQUID ELECTRICAL TAPE (STAR BRITE) OR FLUID FILM (EUREKA CHEMI AND ALL PLUGS AND SOCKETS SHALL BE FILLED WITH NYK-77 COMPOUND (TRUCK LITE) TO SEAL OUT MOISTURE.
7. ALL NYLON INSULATED AND UNINSULATED CRIMPS SHALL BE DONE WITH A RATCHETING TYPE CRIMP TOOL WITH THE CORRECT DIES FOR THE TERMINALS BEING CRIMPED.
8. HEAVY DUTY RING LUGS SHALL BE CRIMPED WITH A HEAVY DUTY COMPOUND LEVER STYLE, DIE TYPE TOOL OR SOLDERED.
9. ALL NON INSULATED CRIMP/SOLDER TERMINALS OUTSIDE OF THE CAB SHALL BE SEALED WITH ADHESIVE LINED HEAT SHRINK TUBING.
10. EACH POSITIVE BATTERY TERMINAL OR STUD/BOLT SHALL HAVE A BOOT, CAP, COVER OR SHIELD, ALONG WITH ALL POSITIVE TERMINALS.
11. ALL WIRE ROUTING SHALL NOT BE PLACED UNDER TENSION AND SHALL BE FREE AND CLEAR OF ANY MOVING PARTS AND HEAT SOURCES. NYLON SPLIT LOOM SHALL PROTECT THE HARNESS IN THE OPERATING ENVIRONMENT AND PROVIDE PROTECTION FROM ROAD DAMAGE. WHENEVER WIRES ARE RUN THRU HOLES IN METAL PARTITIONS THE HOLES SHALL BE DEBURRED & EQUIPPED WITH SUITABLE MECHANICAL PROTECTION GROMMETS.
12. ALL ADDED UNDER HOOD AND UNDER BODY WIRING MUST BE CROSS-LINKED POLYETHYLENE, HIGH TEMPERATURE (MIN 125° C) INSULATED WIRE
13. FOLLOW MANUFACTURES INSTALLATION INSTRUCTIONS.
14. DO NOT INSTALL EQUIPMENTIN THE AIRBAG DEPLOYMENT ZONE.
15. ALL CABLE AND HARNESS ASSEMBLIES TO BE DONE PER: (PC/WHMA-A-620.

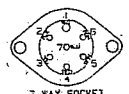

RAM GROUND POINTS
1. BATTERY LEFT SIDE
2. RIGHT SIDE ENGINE COMPARTMENT
3. LEFT FRONT FRAME
4. BEHIND KICK PANEL LEFT SIDE
5. LOWER RIGHT INSTRUMENT PANEL

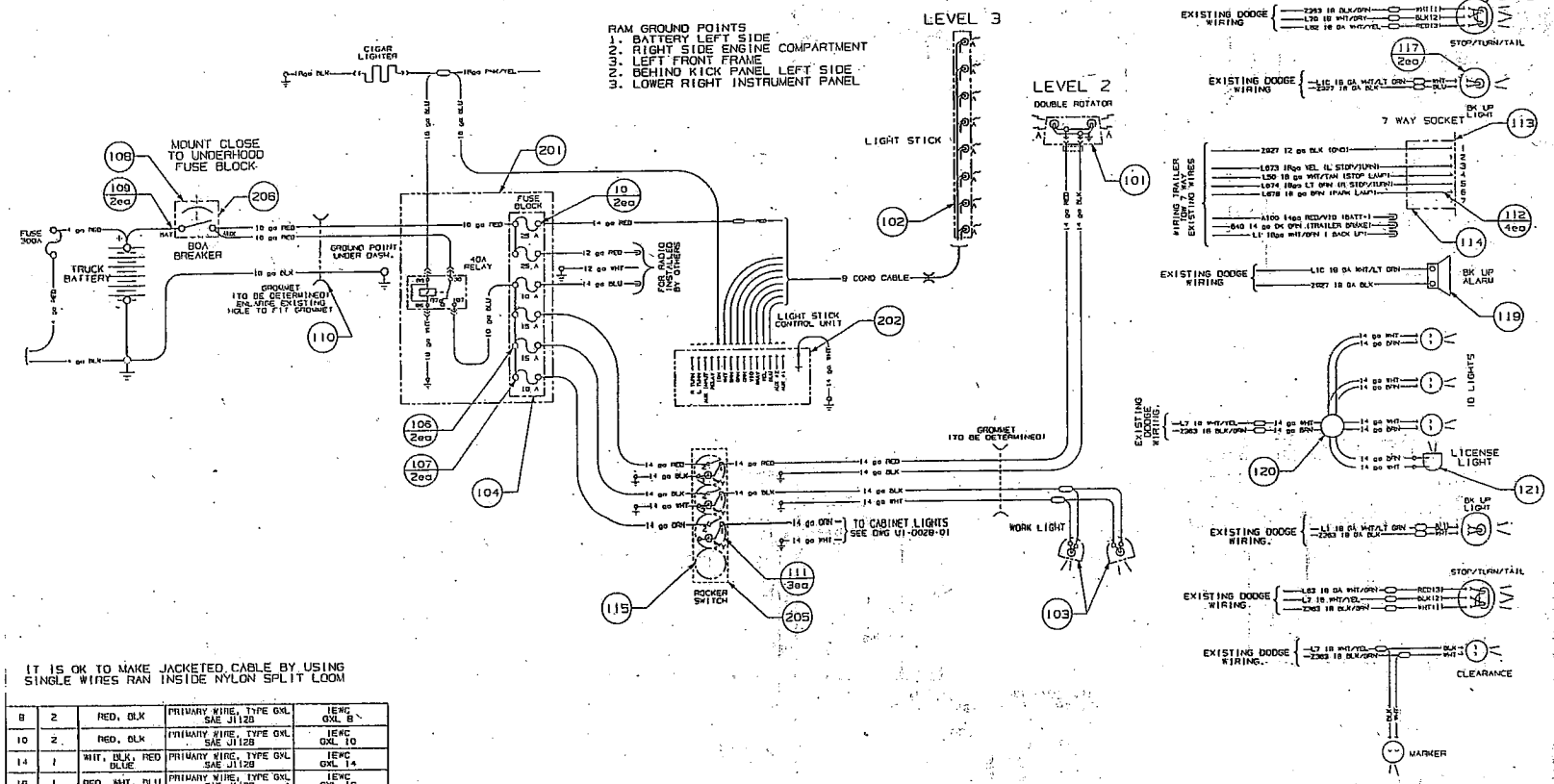

IT IS OK TO MAKE JACKETED CABLE BY USING SINGLE WIRES RAN INSIDE NYLON SPLIT LOOM

SIZE AWG	NUM OF COND	INSULATION COLOR	TYPE	MANUF PART NUM. (OR EQUIV)
8	2	RED, BLK	PRIMARY WIRE, TYPE GXL SAE J1128	IEWC GXL 8
10	2	RED, BLK	PRIMARY WIRE, TYPE GXL SAE J1128	IEWC GXL 10
14	1	WHT, BLK, RED BLUE	PRIMARY WIRE, TYPE GXL SAE J1128	IEWC GXL 14
16	1	RED, WHT, BLU	PRIMARY WIRE, TYPE GXL SAE J1128	IEWC GXL 16

WIRE REQUIREMENT LIST

BILL OF MATERIALS

ITEM	QTY	DESCRIPTION	MANUF #/ DWG NO.	CT NO.
101	1	MINI-LIGHTBAR, DUAL ROTATOR, AMBER, 12V	TARGET TECH 450112-02	034-1964
102	1	DIR LIGHT, 51" 8 LAMP W/CONT & 30" CABLE	TARGET TECH 322612	034-1965
103	2	WORK LAMP, WITH ON/OFF SWITCH	HELLA H15470001	HELLA 8763
104	1	6 POSITION FUSE BLOCK MODIFICATION	SEE DWG U1-0034-01	.
105	2	ATC/ATO BLADE FUSE 25 AMP	BUSSMANN ATC-25	030-3155
106	2	ATC/ATO BLADE FUSE 15 AMP, LT BLUE	BUSSMANN ATC-15	030-3236
107	2	ATC/ATO BLADE FUSE 10 AMP, RED	BUSSMANN ATC-10	030-3152
108	1	HI AMP CIR BREAKER SW/MAN RESET 80A	BUSSMANN 185-080-F	030-4821
109	2	TERMINAL INSULATOR 8-2 GA, RED	SHIELD SY2961-RED	032-4825
110	1	SNAP IN LIQUID TIGHT GROMMET, SIZE AS REQ	HEYCO 401_	DIGI KEY RP71_-ND
111	3	ROCKER SWITCH, SPST LIGHTED YEL, SNAP IN	DIGI KEY 67-1920-ND	030-4936
112	4	PIN TERMINAL, RED NYL, DBL CRIMP, 22-18	McMASTER B009K71	OR EQUIV
113	1	SOCKET 7 WAY 2 HOLE, SAE J-560	COLE HERSEE 12063	034-1265
114	1	BOOT FOR 7 WAY	COLE HERSEE 11178	034-4804
115	1	FINISHING PLUG, STEEL NICKEL PL. 15/16 ID	McMASTER 9563K87	OR EQUIV
116	2	STOP, TAIL, TURN, RED, BULB 4" SEALED	TRUCK LITE 40098R	.
117	2	BACK UP LAMP, 4" SEALED, SINGLE LAMP	TRUCK LITE 40004	034-1290
118	7	MARKER AND CLEARANCE RED LED, 2½, SEALED	TRUCK LITE 10050R	034-4890
119	1	BACK UP ALARM, 102 dB, 12-24V DC.	ECCO 530	054-1654
120	1	LED FOUR PLUG ID/ LICENSE HARNESS	TRUCK LITE 88338	034-3554 OR EQUIV
121	1	LICENSE PLATE LIGHT LED	TRUCK LITE 15040	034-4887

PE 32-12-5367

REV	DESCRIPTION	BY
A	June 07 ADDED SHEET METAL DETAIL SEE SHT 2 CHANGED RELAY TO 40 AMP	J Payne

NEXT ASSEMBLY

STATE OF CALIFORNIA
DEPARTMENT OF TRANSPORTATION
DIVISION OF EQUIPMENT

2007-08 DODGE RAM, UTILITY BODY IND CONSOLE! ELEC SCH

SCALE	X	DATE 22 Aug 07	1-08-00806 -ESI
DRAWN	J Payne	DESIGNED J Payne	
CHECKED		APPROVED	SHEET 1 OF 2 SHEETS

BILL OF MATERIALS

ITEM	QTY	DESCRIPTION	MANUF. #/ DWG NO.	CT NO.
201	1	16 GA (.06) 5 X 6 STEEL SHEET, HOT OR COLD ROLLED. ASTM A569 OR ASTM A366		
202	1	CONSISTS OF ITEMS 202 AND 203		
203	1	14 GA (.075) 2 1/16 X 9 3/8 STEEL SHEET, HOT OR COLD ROLLED. ASTM A569 OR ASTM A366		
204	1	14 GA (.075) 19/16 X 1 3/4 STEEL SHEET, HOT OR COLD ROLLED. ASTM A569 OR ASTM A366		
205	1	16 GA (.06) 27/8 X 5 3/16 STEEL SHEET, HOT OR COLD ROLLED. ASTM A569 OR ASTM A366		
206	1	16 GA (.06) 3 X 3 1/4 STEEL SHEET, HOT OR COLD ROLLED. ASTM A569 OR ASTM A366		

NOTES:
1. ALL WELDS, ELECTRICAL AND PAINT WILL BE IN COMPLIANCE WITH CALTRANS EQUIPMENT QUALITY STANDARDS. GO TO www.dot.ca.gov/hq/eqsc TO VIEW EQUIPMENT QUALITY STANDARDS.
2. REMOVE ALL BURRS AND SHARP EDGES.
3. PRE TREATMENT: IRON PHOSPHATE 3 STAGE MIN., PER POWDER COAT MANUF SPECIFICATIONS.

   FINISH: POLYESTER, TGIC FREE, POWDER COAT ALL SURFACES AND EDGES. 1.5-3 mil thk.

   COLOR: SEMI GLOSS HYTEX BLACK, (FINE TEXTURED) (CARDINAL # C241-BK01 OR EQUIV)

   ALL THREADS TO BE FREE OF PAINT.
4. DIMENSIONS MAY REQUIRE ADJUSTMENTS FOR BEST FIT

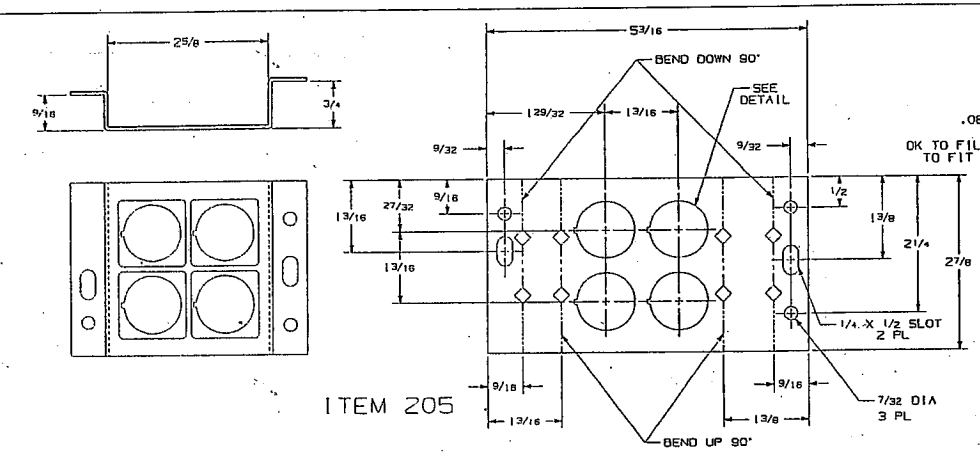

ITEM 205

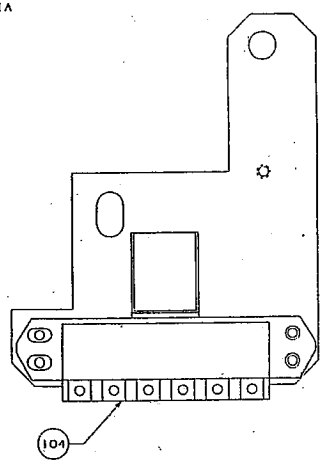

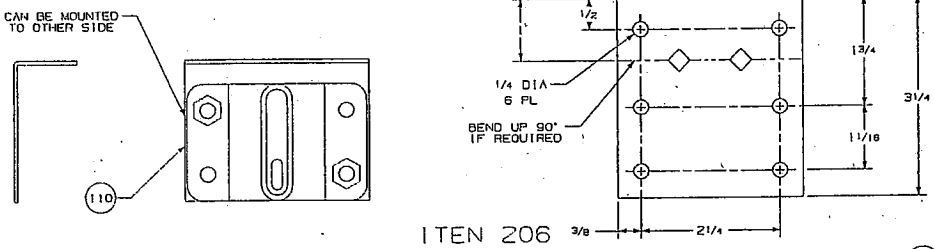

ITEM 206

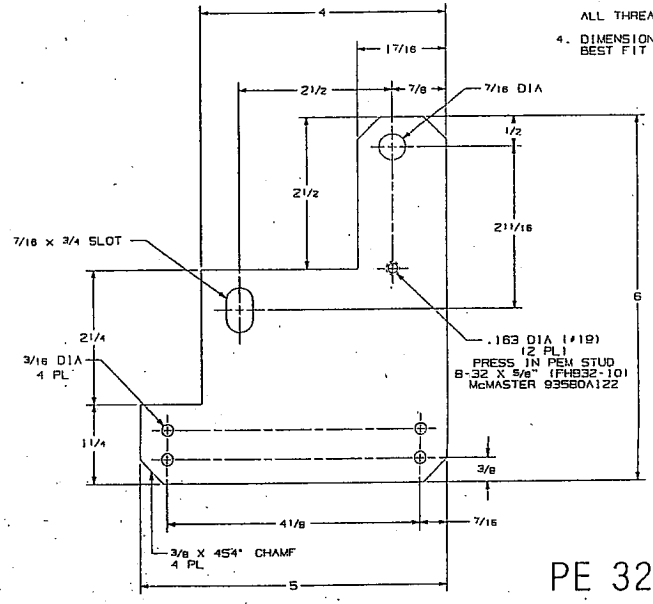

ITEM 201

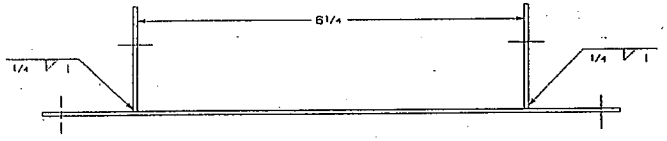

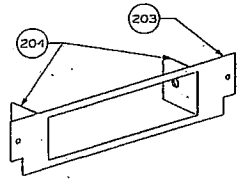

ITEM 202

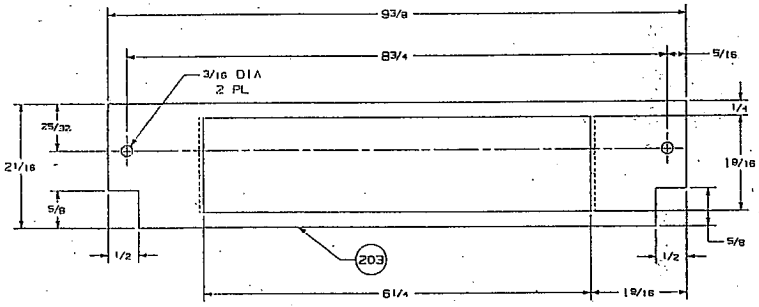

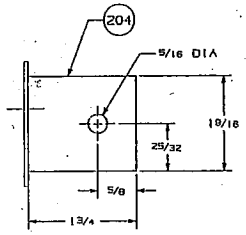

PE 32-12-5367

REV	DESCRIPTION	BY

NEXT ASSEMBLY

STATE OF CALIFORNIA
DEPARTMENT OF TRANSPORTATION
DIVISION OF EQUIPMENT

2007-08, DODGE RAM UTILITY BODY
FUSE PANEL BRACKET

SCALE	X	DATE	22 Aug 07	1-08-0080G -ESZ
DRAWN	J Payne	DESIGNED	X	
CHECKED		APPROVED		SHEET 2 OF 2 SHEETS

NOTES:

1. ALL WELDS, ELECTRICAL AND PAINT WILL BE IN COMPLIANCE WITH CALTRANS EQUIPMENT QUALITY STANDARDS. GO TO www.dot.ca.gov/hq/maint/ to VIEW EQUIPMENT QUALITY STANDARDS.
2. ALL WIRE AND CABLE TO BE SECURED AND SUPPORTED EVERY 18" BY INSULATED METAL LOOM CLAMPS.
3. PLASTIC TIE WRAPS SHALL NOT BE USED AS A MEANS OF SUPPORT. THEY MAY BE USED FOR BUNDLING OR RETENTION OF MULTIPLE CONDUCTORS.
4. ALL BATTERY CABLE CONNECTIONS SHALL BE HEAVY DUTY RING STYLE LUGS, SEAMLESS COPPER, TIN PLATED, CRIMP OR SOLDER. TAMP/ITSO#xxx-2 or MOLEX/19521-01xxx)
5. RING TERMINALS AND BUTT SPLICES FOR 22 TO 10 GAUGE WIRES, SHALL BE SOLDERLESS INSULATED CRIMP TERMINALS DOUBLE CRIMP STYLE, TIN PLATED COPPER, UL LISTED, NYLON INSULATED, RED, BLUE, YELLOW, RATED TO 220° F. (AMP/ITSO or MOLEX/AVIATION). ALL EXTERIOR OF THE CAB SPLICES AND TERMINALS SHALL BE SEALED WITH ADHESIVE LINED HEAT SHRINK TUBING.
6. ALL EXTERIOR OF THE CAB EXPOSED ELECTRICAL TERMINAL STUDS OR SCREWS SHALL BE COATED WITH LIQUID ELECTRICAL TAPE (STAR BRITE) OR FLUID FILM (KLEENKA GREW) AND ALL PLUGS AND SOCKETS SHALL BE FILLED WITH NYK-77 COMPOUND (TRUCK LITE) TO SEAL OUT MOISTURE.
7. ALL NYLON INSULATED AND UNINSULATED CRIMPS SHALL BE DONE WITH A RATCHETING TYPE CRIMP TOOL WITH THE CORRECT DIES FOR THE TERMINALS BEING CRIMPED.
8. HEAVY DUTY RING LUGS SHALL BE CRIMPED WITH A HEAVY DUTY COMPOUND LEVER STYLE, DIE TYPE TOOL OR SOLDERED.
9. ALL NON INSULATED CRIMP/SOLDER TERMINALS OUTSIDE OF THE CAB SHALL BE SEALED WITH ADHESIVE LINED HEAT SHRINK TUBING.
10. EACH POSITIVE BATTERY TERMINAL OR STUD/BOLT SHALL HAVE A BOOT, CAP, COVER OR SHIELD, ALONG WITH ALL POSITIVE TERMINALS.
11. ALL WIRE ROUTING SHALL NOT BE PLACED UNDER TENSION AND SHALL BE FREE AND CLEAR OF ANY MOVING PARTS AND HEAT SOURCES. NYLON SPLIT LOOM SHALL PROTECT THE HARNESS IN THE OPERATING ENVIROMENT AND PROVIDE PROTECTION FROM ROAD DAMAGE. WHENEVER WIRES ARE RUN THRU HOLES IN METAL PARTITIONS THE HOLES SHALL BE DEBURRED & EQUIPPED WITH SUITABLE MECHANICAL PROTECTION GROMMETS.
12. ALL ADDED UNDER HOOD AND UNDER BODY WIRING MUST BE CROSS-LINKED POLYETHYLENE, HIGH TEMPERATURE (MIN 125° C) INSULATED WIRE
13. FOLLOW MANUFACTURES INSTALLATION INSTRUCTIONS.
14. DO NOT INSTALL EQUIPMENT IN THE AIRBAG DEPLOYMENT ZONE.
15. ALL CABLE AND HARNESS ASSEMBLIES TO BE DONE PER: IPC/WHMA-A-620.

IF UPFITTER SWITCHES CAME WITH TRUCK DO NOT ORDER ITEMS 101, 102, 103

FORD EXTERIOR GROUND POINTS (TYP)
1. LEFT SIDE FIREWALL ABOVE BJB FUSE BLOCK
2. TO THE RIGHT SIDE OF THE BATTERY.
3. RIGHT SIDE FIRE WALL NEAR BATTERY
4. AT BATTERY TERMINAL

FORD UPFITTER SWITCH ASSEMBLY (OPTION 66S) SEE ENGINEERING FOR INSTALLATION INSTRUCTION.

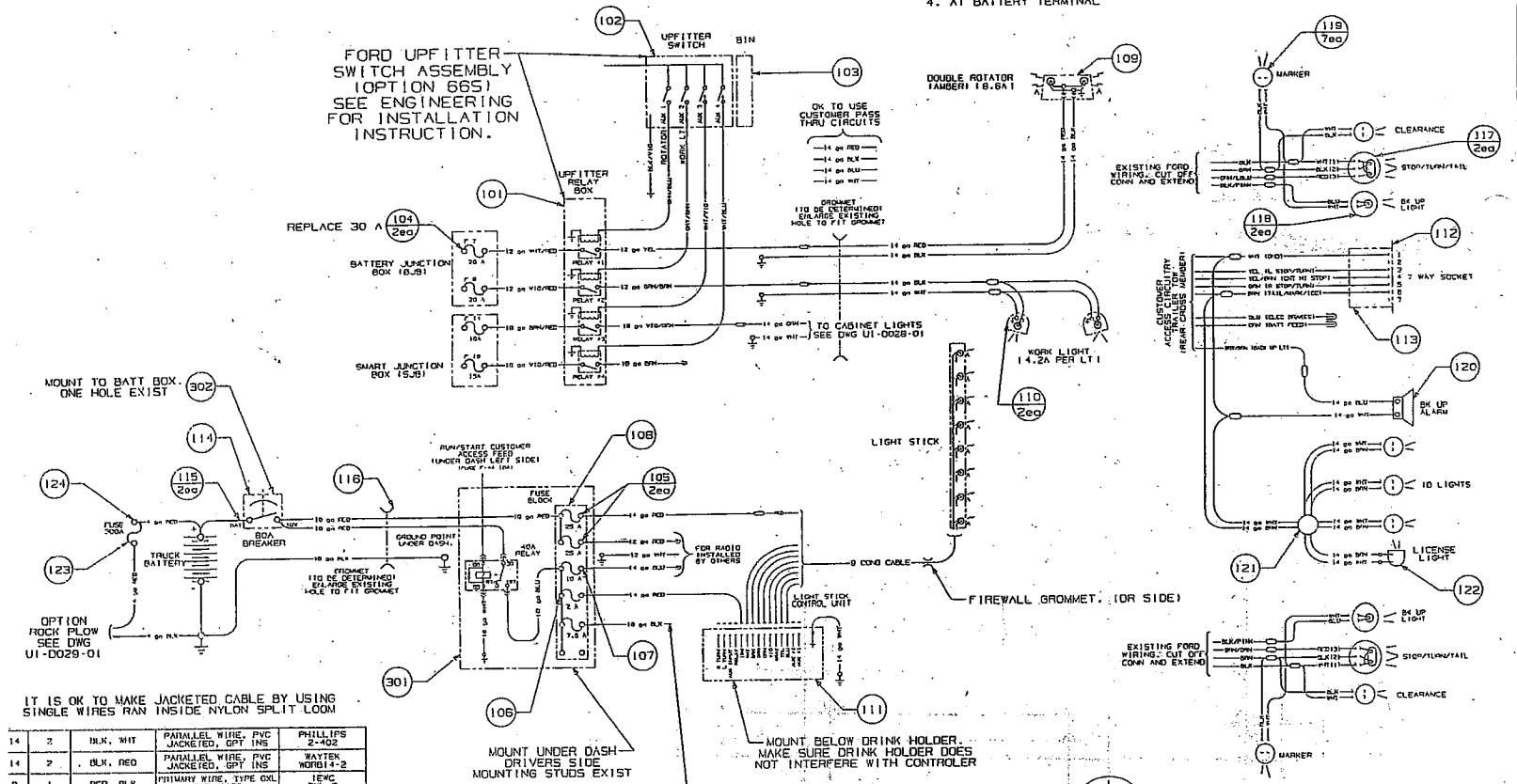

IT IS OK TO MAKE JACKETED CABLE BY USING SINGLE WIRES RAN INSIDE NYLON SPLIT LOOM

SIZE AWG	NUM OF COND	INSULATION COLOR	TYPE	MANUF PART NO (OR EQUIV)
14	2	BLK, WHT	PARALLEL WIRE, PVC JACKETED, GPT INS	PHILLIPS 2-402
14	2	BLK, RED	PARALLEL WIRE, PVC JACKETED, GPT INS	WAYTEK WOOD14-2
8	1	RED, BLK	PRIMARY WIRE, TYPE GXL SAE J1128	IEWC GXL 8
10	1	RED, BLU	PRIMARY WIRE, TYPE GXL SAE J1128	IEWC GXL 10
12	1	RED, ORN, WHT	PRIMARY WIRE, TYPE GXL SAE J1128	IEWC GXL 12
14	1	BLK, RED, ORN WHT	PRIMARY WIRE, TYPE GXL SAE J1128	IEWC GXL 14
16	1	BLK, RED, BLU	PRIMARY WIRE, TYPE GXL SAE J1128	IEWC GXL 16

WIRE REQUIREMENT LIST

BILL OF MATERIALS

ITEM	QTY	DESCRIPTION	MANUF #/ DWG NO.	CT NO.
101	1	WIRING HARNESS WITH RELAY BOX	FORD 7C3Z-14A303-A	
102	1	SWITCH ASSEMBLY	FORD 7C3Z-13D730-AA	
103	1	CENTER INSTRUMENT PANEL TRAY	FORD BC3Z-2513546-BA	
104	1	J CASE/FMX CARTRIDGE FUSE, BLUE, 20 AMP	LITTELFUSE 495020	BUSSMANN FMX-20
105	2	ATC/ATO BLADE FUSE NATURAL, 25 AMP	BUSSMANN ATC-25	030-3155
106	1	ATC/ATO BLADE FUSE GRY, 2 AMP	BUSSMANN ATC-2	030-3232
107	1	ATC/ATO BLADE FUSE RED, 10 AMP	BUSSMANN ATC-10	030-3152
108	1	6 POSITION FUSE BLOCK MODIFICATION	SEE DWG UI-0034-01	
109	1	MINI-LIGHTBAR, DUAL ROTATOR, AMBER, 12V	TARGET TECH 450112-02	034-1964
110	2	WORK LAMP W/ON-OFF SWITCH, 55 WATT	HELLA H1547000I	HELLA 87163
111	1	DIR LIGHT, 51" 8 LAMP W/CONT & 30' CABLE	TARGET TECH 322612	034-1965
112	1	SOCKET, 7 WAY, 2 MT HOLES, SAE J-560B	COLE HERSEE 12063	034-1265
113	1	PROTECTIVE SOCKET BOOT, 7 WAY	COLE HERSEE 11178	034-4804
114	1	HI AMP CIR BREAKER SW/MAN RESET 80A	BUSSMANN 185-080-F	030-4821
115	2	TERMINAL INSULATOR 8-2 GA, RED	PATHMN SUPPLY SW/ED SY2861-RED	032-4825
116	1	SNAP IN LIQUID TIGHT GROMMET, __" Ø	HEYCO 40__	034-_____
117	2	STOP, TAIL, TURN, RED, BULB 4" SEALED	TRUCK LITE 40098R	
118	2	BACK UP LAMP, 4" SEALED, SINGLE LAMP	TRUCK LITE 40004	034-1290
119	7	MARKER AND CLEARANCE RED LED, 2½, SEALED	TRUCK LITE 10050R	034-4890
120	1	BACK UP ALARM, 102 dB, 12-24V DC.	ECCO 530	054-1654
121	1	LED FOUR PLUG ID/ LICENSE HARNESS	TRUCK LITE 88338	034-3554 OR EQUIV
122	1	LICENSE PLATE LIGHT LED	TRUCK LITE 15040	034-4897
123	1	FUSE BOLT IN, ANL SERIES, 300 AMPS	BUSSMANN ANL-300	030-4864
124	1	FUSE BLOCK FOR ANL SERIES	BLUE SEA 5005	030-4863

PE 32-12-5367

REV	DESCRIPTION	BY
.	.	.

NEXT ASSEMBLY

STATE OF CALIFORNIA
DEPARTMENT OF TRANSPORTATION
DIVISION OF EQUIPMENT

2008 FORD F-250/450 ELEC SCH UTILITY BODY, IND RADIO CONSOLE

SCALE X | DATE 22 Aug 07 | 1-08-008FD-251

DRAWN J Payne | DESIGNED J Payne | CHECKED | APPROVED | SHEET 1 OF 3 SHEETS

BILL OF MATERIALS

ITEM	QTY	DESCRIPTION	MANUF # / DWG NO.	CT NO.
301	1	16 GA (.061) 8 1/4 X 4 STEEL SHEET, HOT OR COLD ROLLED. ASTM A569 OR ASTM A366		
302	1	16 GA (.061) 6 1/4 X 8 1/2 STEEL SHEET, HOT OR COLD ROLLED. ASTM A569 OR ASTM A366		

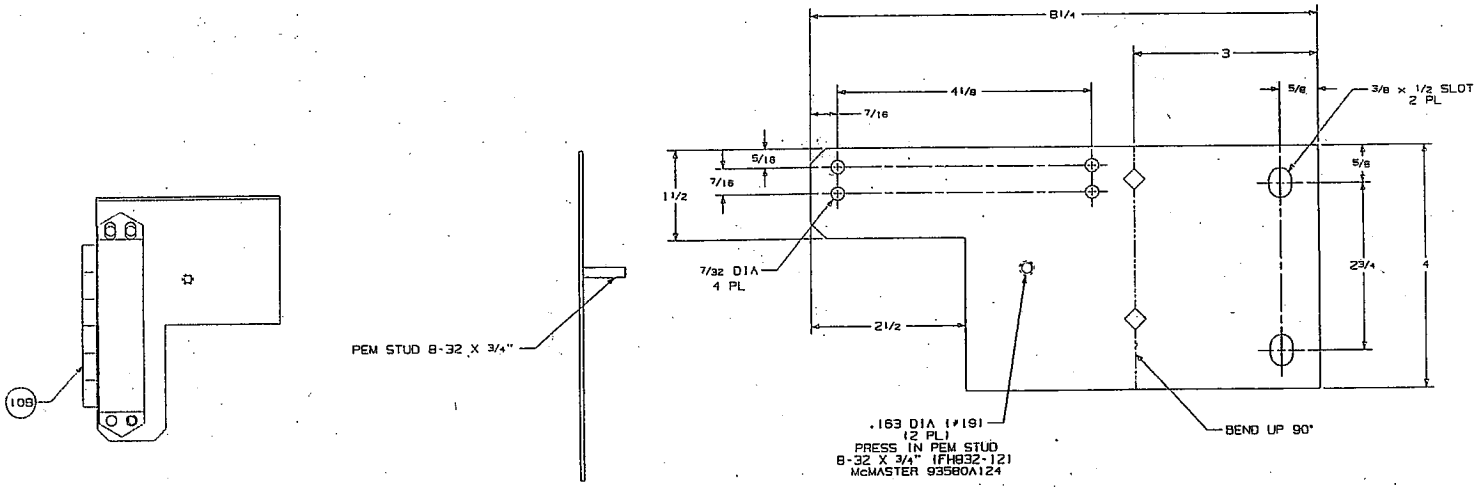

ITEM 301

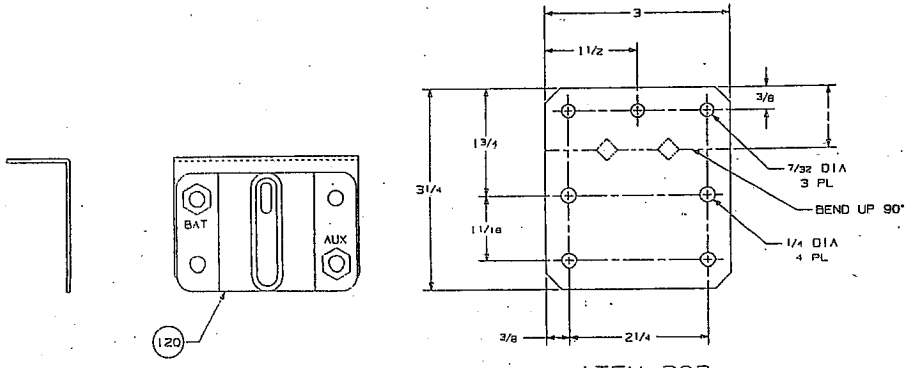

ITEM 302

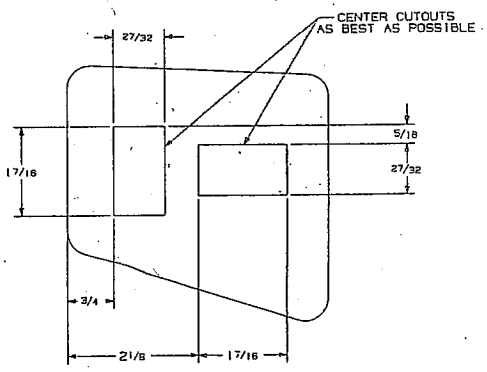

ROCK PLOW SWITCH DETAIL.
POP OUT PLATE FROM DASH.
PANEL LOCATED LEFT OF AC
CONTROL KNOB, NEAR STEERING
WHEEL. OK TO CUT BY HAND.
SOME PLASTIC RIBBING ON BACK
SIDE MAY HAVE TO BE REMOVED

PE 32-12-5367

REV	DESCRIPTION	BY

NEXT ASSEMBLY	STATE OF CALIFORNIA DEPARTMENT OF TRANSPORTATION DIVISION OF EQUIPMENT
	2008 FORD F-250/450 UTILITY BODY FUSE BRACKET
SCALE X	DATE 22 Aug 07 — 1-08-000FD-ES3
DRAWN J Payne	DESIGNED X
CHECKED	APPROVED — SHT 1 OF 1 SHEETS

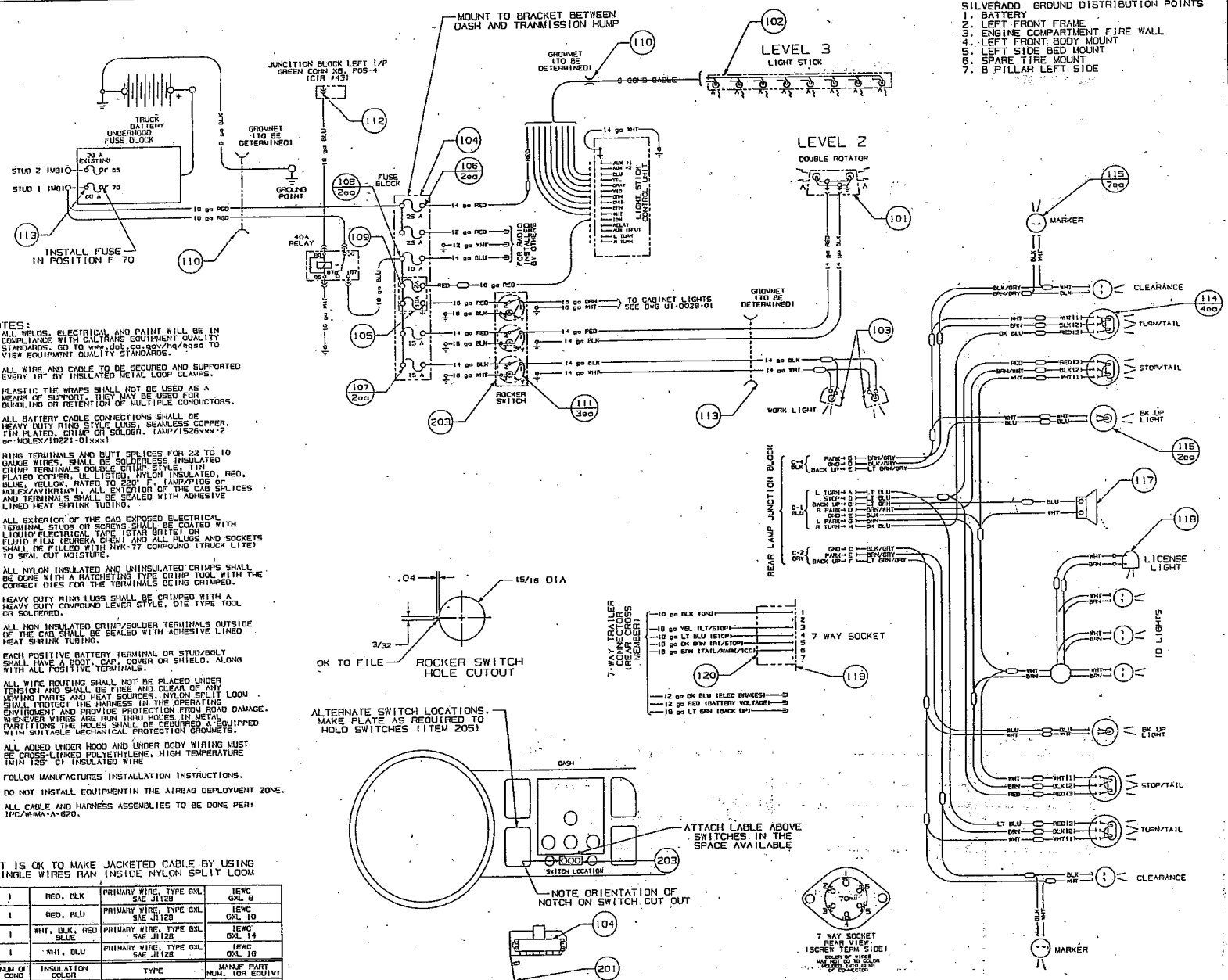

SILVERADO GROUND DISTRIBUTION POINTS
1. BATTERY
2. LEFT FRONT FRAME
3. ENGINE COMPARTMENT FIRE WALL
4. LEFT FRONT BODY MOUNT
5. LEFT SIDE BED MOUNT
6. SPARE TIRE MOUNT
7. B PILLAR LEFT SIDE

NOTES:
1. ALL WELDS, ELECTRICAL AND PAINT WILL BE IN COMPLIANCE WITH CALTRANS EQUIPMENT QUALITY STANDARDS. GO TO www.dot.ca.gov/hq/eqqc TO VIEW EQUIPMENT QUALITY STANDARDS.
2. ALL WIRE AND CABLE TO BE SECURED AND SUPPORTED EVERY 18" BY INSULATED METAL LOOP CLAMPS.
3. PLASTIC TIE WRAPS SHALL NOT BE USED AS A MEANS OF SUPPORT. THEY MAY BE USED FOR BUNDLING OR RETENTION OF MULTIPLE CONDUCTORS.
4. ALL BATTERY CABLE CONNECTIONS SHALL BE HEAVY DUTY RING STYLE LUGS, SEAMLESS COPPER, TIN PLATED, CRIMP OR SOLDER. (AMP/152BWW-2 or MOLEX/10221-01WW)
5. RING TERMINALS AND BUTT SPLICES FOR 22 TO 10 GAUGE WIRES, SHALL BE SOLDERLESS INSULATED CRIMP TERMINALS DOUBLE CRIMP STYLE, TIN PLATED COPPER, UL LISTED, NYLON INSULATED, RED, BLUE, YELLOW, RATED TO 220° F. (AMP/PIDG or MOLEX/AVIKRIMP). ALL EXTERIOR OF THE CAB SPLICES AND TERMINALS SHALL BE SEALED WITH ADHESIVE LINED HEAT SHRINK TUBING.
6. ALL EXTERIOR OF THE CAB EXPOSED ELECTRICAL TERMINAL STUDS OR SCREWS SHALL BE COATED WITH LIQUID ELECTRICAL TAPE (STAR BRITE) OR FLUID FILM (EUREKA CHEM) AND ALL PLUGS AND SOCKETS SHALL BE FILLED WITH NYK-77 COMPOUND (TRUCK LITE) TO SEAL OUT MOISTURE.
7. ALL NYLON INSULATED AND UNINSULATED CRIMPS SHALL BE DONE WITH A RATCHETING TYPE CRIMP TOOL WITH THE CORRECT DIES FOR THE TERMINALS BEING CRIMPED.
8. HEAVY DUTY RING LUGS SHALL BE CRIMPED WITH A HEAVY DUTY COMPOUND LEVER STYLE, DIE TYPE TOOL OR SOLDERED.
9. ALL NON INSULATED CRIMP/SOLDER TERMINALS OUTSIDE OF THE CAB SHALL BE SEALED WITH ADHESIVE LINED HEAT SHRINK TUBING.
10. EACH POSITIVE BATTERY TERMINAL OR STUD/BOLT SHALL HAVE A BOOT, CAP, COVER OR SHIELD, ALONG WITH ALL POSITIVE TERMINALS.
11. ALL WIRE ROUTING SHALL NOT BE PLACED UNDER TENSION AND SHALL BE FREE AND CLEAR OF ANY MOVING PARTS AND HEAT SOURCES. NYLON SPLIT LOOM SHALL PROTECT THE HARNESS IN THE OPERATING ENVIROMENT AND PROVIDE PROTECTION FROM ROAD DAMAGE. WHENEVER WIRES ARE RUN THRU HOLES IN METAL PARTITIONS THE HOLES SHALL BE DEBURRED & EQUIPPED WITH SUITABLE MECHANICAL PROTECTION GROMMETS.
12. ALL ADDED UNDER HOOD AND UNDER BODY WIRING MUST BE CROSS-LINKED POLYETHYLENE, HIGH TEMPERATURE MIN 125° C INSULATED WIRE
13. FOLLOW MANUFACTURES INSTALLATION INSTRUCTIONS.
14. DO NOT INSTALL EQUIPMENT IN THE AIRBAG DEPLOYMENT ZONE.
15. ALL CABLE AND HARNESS ASSEMBLIES TO BE DONE PER: IPC/WHMA-A-620.

IT IS OK TO MAKE JACKETED CABLE BY USING SINGLE WIRES RAN INSIDE NYLON SPLIT LOOM

SIZE AWG	NUM OF COND	INSULATION COLOR	TYPE	MANUF PART NUM. (OR EQUIV)
8	1	RED, BLK	PRIMARY WIRE, TYPE GXL SAE J1128	IEWC GXL 8
10	1	RED, BLU	PRIMARY WIRE, TYPE GXL SAE J1128	IEWC GXL 10
14	1	WHT, BLK, RED BLUE	PRIMARY WIRE, TYPE GXL SAE J1128	IEWC GXL 14
16	1	WHT, BLU	PRIMARY WIRE, TYPE GXL SAE J1128	IEWC GXL 16

WIRE REQUIREMENT LIST

BILL OF MATERIALS

ITEM	QTY	DESCRIPTION	MANUF #/ DWG NO.	CT NO.
101	1	MINI-LIGHTBAR, DUAL ROTATOR, AMBER, 12V	TARGET TECH 450112-02	034-1964
102	1	DIR LIGHT, 51" 8 LAMP W/CONT & 30' CABLE	TARGET TECH 322612	034-1965
103	2	WORK LIGHT, H3 BULB 12 V, WITH SWITCH	HELLA H15470001	HELLA 87163
104	1	6 POSITION FUSE BLOCK MODIFICATION	SEE DWG UI-0034-01	-
105	1	ADD A FUSE, ATC/ATO	BUSSMANN HHA	030-4731
106	2	ATC/ATO BLADE FUSE 25 AMP	BUSSMANN ATC-25	030-3155
107	2	ATC/ATO BLADE FUSE 15 AMP, LT BLUE	BUSSMANN ATC-15	030-3236
108	2	ATC/ATO BLADE FUSE 10 AMP, RED	BUSSMANN ATC-10	030-3152
109	1	ATC/ATO BLADE FUSE 2 AMP, BLK	BUSSMANN ATC-2	030-3232
110	AS REQ	SNAP IN, LIQUID TIGHT GROMMET	HEYCO 4077.	DIGI-KEY RP777-ND
111	3	ROCKER SWITCH, SPST LIGHTED YEL, SNAP IN	DIGI KEY 67-1920-ND	030-4936
112	1	GT 280 FEMALE UNSEALED TERMINAL, 16-18 GA	DELPHI PACKARD 13516835	DELPHI PACKARD 15304711
113	1	JCASE/FMX CARTRIDGE FUSE, 60 AMP (YEL)	LITTELFUSE JCAS 60	BUSSMANN FMX-60
114	4	MODEL 40 RED BULB, S/T/T, 4" SEALED	TRUCK LITE 4009BR	-
115	7	MARKER AND CLEARANCE RED LED, 2½, SEALED	TRUCK LITE 10050R	034-4890
116	2	BACK UP LAMP, 4" SEALED. SINGLE LAMP	TRUCK LITE 40004	034-1290
117	1	BACK UP ALARM, 102 dB, 12-24 V	ECCO 530	054-1654
118	1	LICENCE PLATE LIGHT LED	TRUCK LITE 15040	034-4897
119	1	SOCKET 7 WAY 2 HOLE, SAE J-560	COLE HERSEE 12063	034-1265
120	1	BOOT FOR 7 WAY	COLE HERSEE 1178	034-4804
121	1	LED FOUR PLUG ID/ LICENSE HARNESS	TRUCK LITE 88338	034-3554
122	3	PIN TERMINAL, NYLON INSL, DBL CRIMP 12-10	McMASTER 8009K73	-
123	1	PIN TERMINAL, NYLON INSL, DBL CRIMP 16-14	McMASTER 8009K72	-
124	2	PIN TERMINAL, NYLON INSL,, DBL CRIMP 22-18	McMASTER 8009K71	-
125				

PE 32-12-5367

REV.		DESCRIPTION	BY

NEXT ASSEMBLY

STATE OF CALIFORNIA
DEPARTMENT OF TRANSPORTATION
DIVISION OF EQUIPMENT

2008 CHEVY SILVERADO 1500-3500
ELEC SCH UTILITY BODY (NO CONSOLE)

SCALE: X | DATE: 17 Apr 07 | 1-08-008GM-ES1
DRAWN: J Poyne | SCANNED: J Poyne
CHECKED: | APPROVED:
SHEET 1 OF 2 SHEETS

BILL OF MATERIALS

ITEM	QTY	DESCRIPTION	MANUF # / DWG NO.	CT NO.
201	1	14 GA (.075) 43/4 X 73/16 STEEL SHEET, HOT OR COLD ROLLED. ASTM A569 OR ASTM A366		
202	1	PRESS IN STUD, STL, Z1, 10-32 X 3/4	PEM FH032-12	McMASTER 93590A174
203	1	16 GA (.061) 17/16 X 61/8 STEEL SHEET, HOT OR COLD ROLLED. ASTM A569 OR ASTM A366		
204	4	U STYLE CLIP ON NUT 6-32 X .295 ℄	McMASTER 94808A105	OR EQUIV
205	1	16 GA (.061) 37/8 X 33/8 STEEL SHEET, HOT OR COLD ROLLED. ASTM A569 OR ASTM A366		

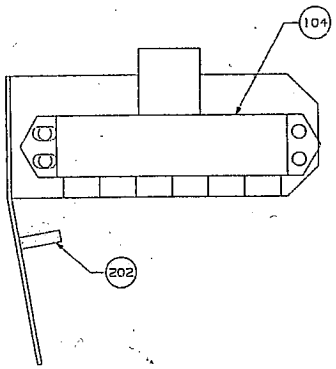

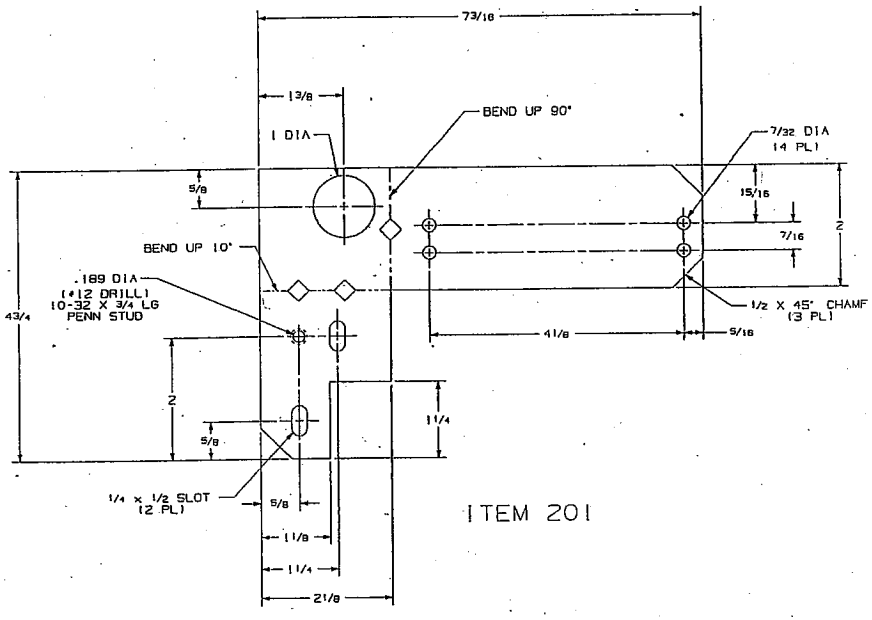

ITEM 201

NOTES:
1. ALL WELDS, ELECTRICAL AND PAINT WILL BE IN COMPLIANCE WITH CALTRANS EQUIPMENT QUALITY STANDARDS. GO TO www.dot.ca.gov/hq/eqsc TO VIEW EQUIPMENT QUALITY STANDARDS.
2. REMOVE ALL BURRS AND SHARP EDGES.
3. PRE TREATMENT: IRON PHOSPHATE 3 STAGE MIN., PER POWDER COAT MANUF SPECIFICATIONS.

   FINISH: POLYESTER, TGIC FREE, POWDER COAT ALL SURFACES AND EDGES. 1.5-3 mil thk.

   COLOR: SEMI GLOSS NYTEX BLACK, (FINE TEXTURED) (CARDINAL # C241-BK01 OR EQUIV)

   ALL THREADS TO BE FREE OF PAINT.

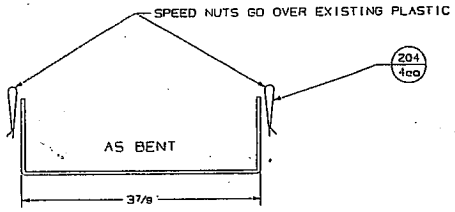

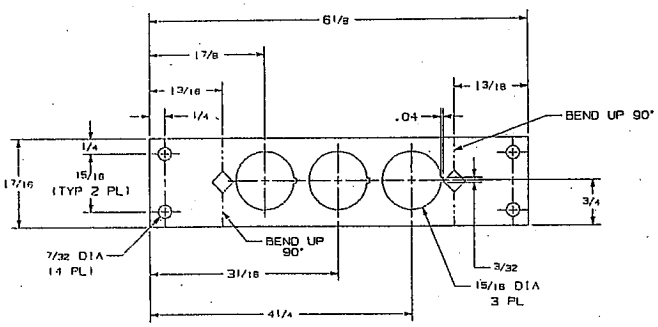

ITEM 203

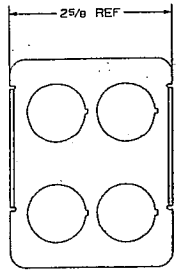

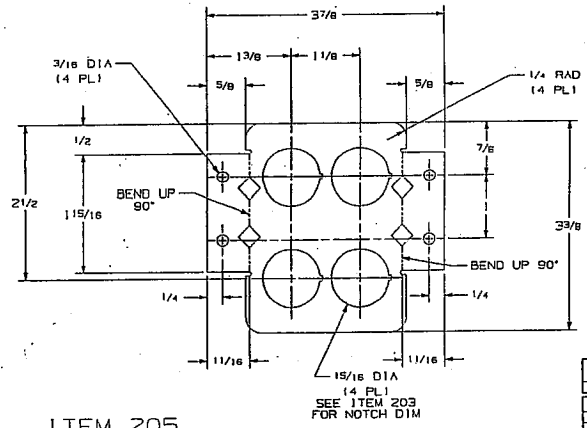

ITEM 205

PE 32-12-5367

REV	DESCRIPTION	BY

NEXT ASSEMBLY

STATE OF CALIFORNIA
DEPARTMENT OF TRANSPORTATION
DIVISION OF EQUIPMENT

2008 CHEVY SILVERADO 1500-3500
UTILITY BODY FUSE BRACKET

SCALE	X	DATE	28 Nov 07	1-08-00BGM
DRAWN	J Payne	DESIGNED	X	-E52
TRACED		APPROVED		SHEET 2 OF 2 SHEETS

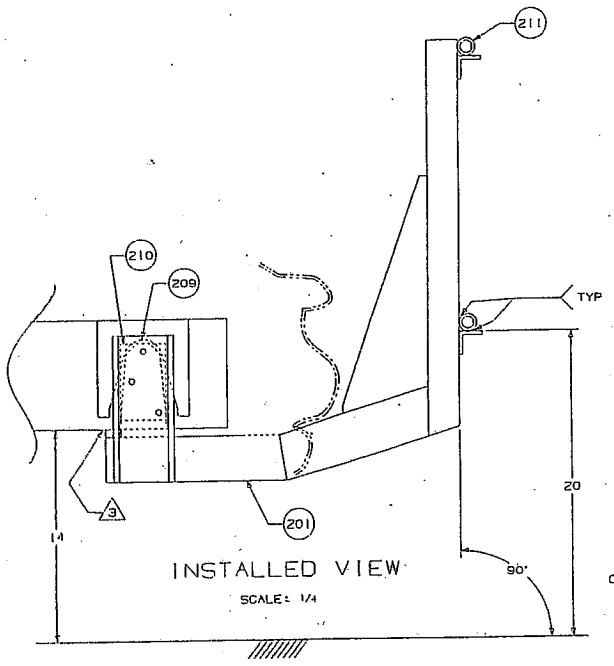

INSTALLED VIEW

SCALE: 1/4

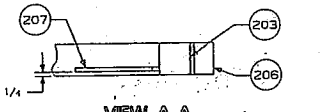

VIEW A-A

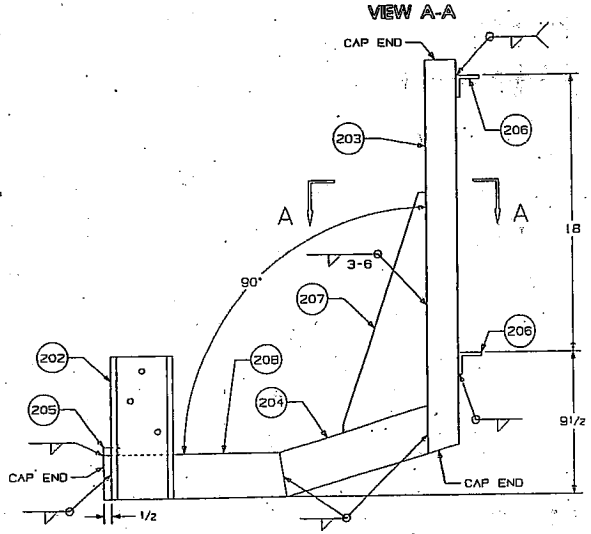

ITEM 201

PASSENGER SIDE SHOWN DRIVER SIDE OPPOSITE.

SCALE: 1/4

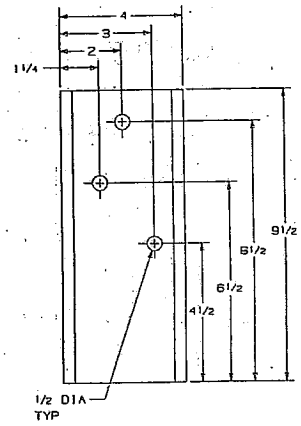

ITEM 202

SCALE: 1/2

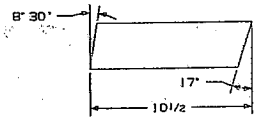

ITEM 204

SCALE: 1/2

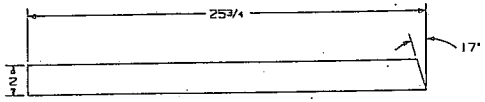

ITEM 203

SCALE: 1/4

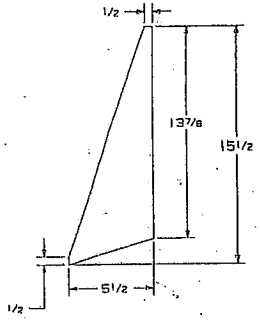

ITEM 207

SCALE: 1/2

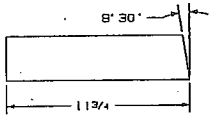

ITEM 208

SCALE: 1/2

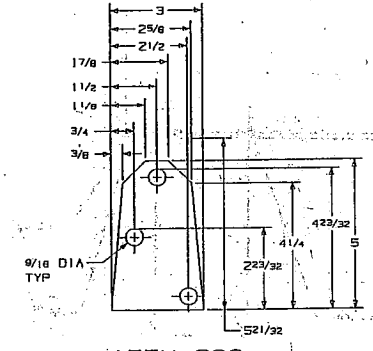

ITEM 209

SCALE: 1/2

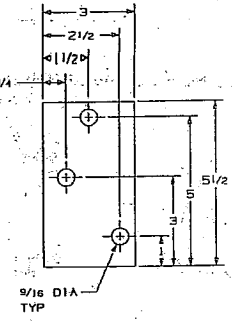

ITEM 210

SCALE: 1/2

BILL OF MATERIALS

ITEM	QTY	DESCRIPTION
201	2	WLD'D ASS'Y C/O ITEMS 202-208 (LEFT & RIGHT)
202	1	4 X 5.4# X 9 1/2 LG CHANNEL
203	1	2 x .188W x 25 3/4 LG STL SQ TUBG
204	1	2 x 3 x .188W x 10 1/2 LG STL RECT TUBG
205	1	1/2 x 1 x 2 LG HRS FLATBAR
206	2	1 1/2 x 1 1/2 x 1/4 x 2 LG STD STL ANGLE
207	1	1/4 x 5 1/2 x 15 1/2 LG HRS FLATBAR
208	1	2 x 3 x .188W x 11 3/4 LG STL RECT TUBG
209	2	1/8 x 3 x 5 LG HRS STRIP
210	2	1/4 x 3 x 5 1/2 LG HRS FLATBAR
211	1	RACK, MOUNTING CT STK# 051-2283

NOTES:

1. ALL WELDS, ELECTRICAL AND PAINT WILL BE IN COMPLIANCE WITH CALTRANS EQUIPMENT QUALITY STANDARDS. GO TO www.dot.ca.gov/hq/eqsc TO VIEW EQUIPMENT QUALITY STANDARDS.
2. ALL JOINTS TO BE WELDED CONTINUOUS UNLESS OTHERWISE SPECIFIED. SIZE OF ALL WELDS TO BE AT LEAST THE THICKNESS OF THE THINNER OF THE ADJACENT METALS. WELDS TO BE UNIFORM AND NEAT IN APPEARANCE.

△3 PRIOR TO DRILLING FRAME, ALIGN ITEM 201 TO BE PERPENDICULAR TO GROUND WHEN ITEM 205 IS IN CONTACT WITH FRAME RAIL.

PE 32-12-5367

CT STK #051-3334 (ITEMS 201,209,210)

REV.	DATE	DESCRIPTION	BY
A	3/05	EDITED ITEM 201	JJ

NEXT ASSEMBLY

TOLERANCE UNLESS OTHERWISE SPECIFIED
DECIMAL ±
FRACTIONAL ±
ANGULAR ±
DRILLED HOLES ±
REAMED HOLES ±

STATE OF CALIFORNIA
DEPARTMENT OF TRANSPORTATION
DIVISION OF EQUIPMENT

CONE RACK MOUNT
2005 2500HD, 3500HD, DODGE 2ND

SCALE	AS NOTED	DATE	2/23/05	1-00DDG-CC2
DRAWN	DOWNIN	DESIGNED	WHEELER	
CHECKED		APPROVED		SHEET 1 OF 1 SHEETS

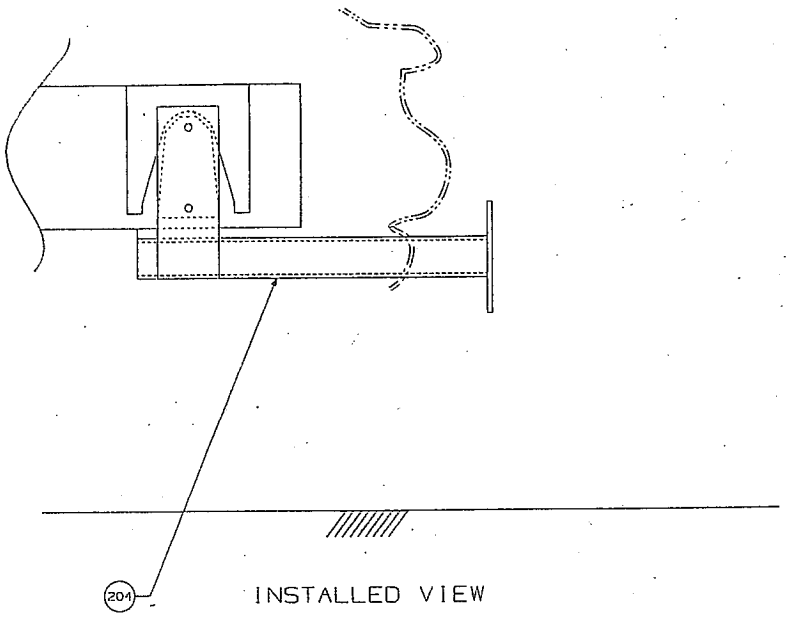

INSTALLED VIEW

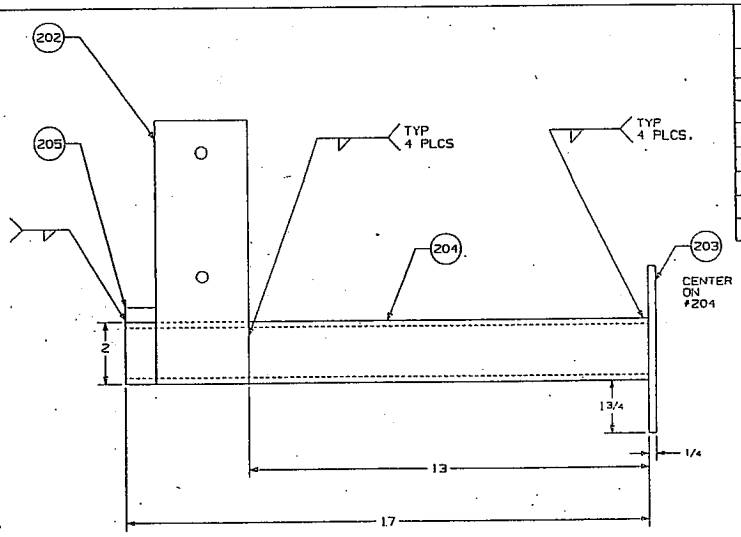

ITEM 201

DRIVER SIDE SHOWN PASSENGER SIDE OPPOSITE.

BILL OF MATERIALS

ITEM	QTY	DESCRIPTION
201	2	WELDED ASSY C/O ITEMS 202-205
202	1	1/4 x 3 x 81/2 LG HRS FLATBAR
203	1	1/4 x 51/2 x 7 LG HRS FLATBAR
204	1	2 x .188W x 17 LG STL SQ TUBG
205	1	1/2 x 1 x 2 LG HRS FLATBAR
206	2	1/8 x 3 x 5 LG HRS STRIP
207	2	1/4 x 3 x 6 LG HRS FLATBAR

NOTES:

1. ALL WELDS, ELECTRICAL AND PAINT WILL BE IN COMPLIANCE WITH CALTRANS EQUIPMENT QUALITY STANDARDS. GO TO www.dot.ca.gov/hq/eqsc TO VIEW EQUIPMENT QUALITY STANDARDS.
2. ALL JOINTS TO BE WELDED CONTINUOUS UNLESS OTHERWISE SPECIFIED. SIZE OF ALL WELDS TO BE AT LEAST THE THICKNESS OF THE THINNER OF THE ADJACENT METALS. WELDS TO BE UNIFORM AND NEAT IN APPEARANCE.

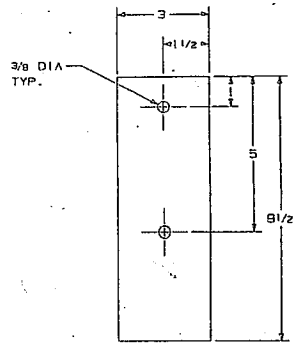

ITEM 202

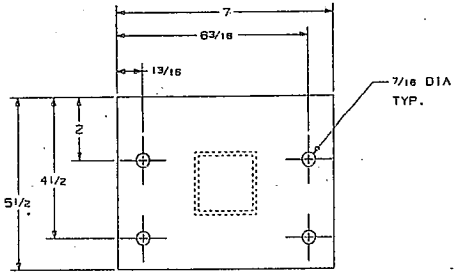

ITEM 203

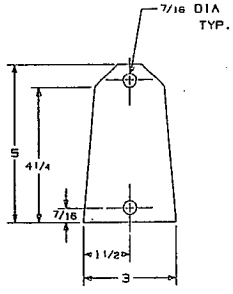

ITEM 206

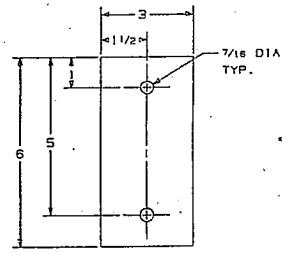

ITEM 207

CT. STK. # 051-9338 1201, 206, 2071

PE 32-12-5367

REV	DATE	DESCRIPTION	BY

NEXT ASSEMBLY

STATE OF CALIFORNIA
DEPARTMENT OF TRANSPORTATION
DIVISION OF EQUIPMENT

CONE HOLDER MOUNT
2005 2500HD, 3500HD, DODGE 2WD & 4WD

SCALE 1/2 | DATE 2/16/05 | 1-00806-CH2

DRAWN JOHNSON | DESIGNED WHEELER

CHECKED | APPROVED

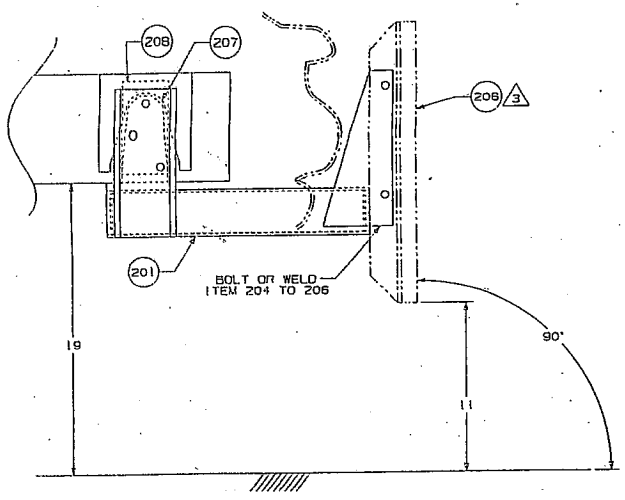

4 WHEEL DRIVE

SCALE: 1/4

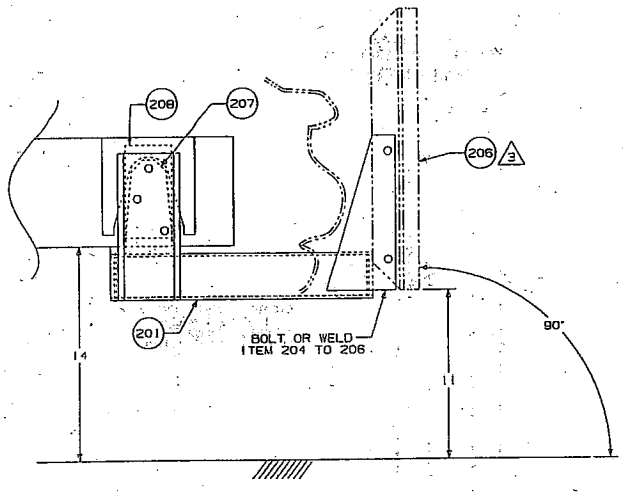

2 WHEEL DRIVE

SCALE: 1/4

BILL OF MATERIALS

ITEM	QTY	DESCRIPTION
201	2	WLD'D ASSY C/O ITEMS 202-205 (LEFT & RIGHT)
202	1	4 x 5.4# x 9 1/2 LG CHANNEL
203	1	2 x 3 x .188W x 17 LG REC TUBE
204	1	1/4 x 4 1/2 x 10 LG HRS FLATBAR
205	1	1/2 x 1 x 2 LG HRS FLATBAR
206	1	PUSH BUMPER DWG# E2-C105-01
		CT STK# 051-2103
207	2	1/8 x 3 x 5 LG HRS FLATBAR
208	2	1/4 x 3 x 6 1/2 LG HRS FLATBAR

△3

NOTES:

1. ALL WELDS, ELECTRICAL AND PAINT WILL BE IN COMPLIANCE WITH CALTRANS EQUIPMENT QUALITY STANDARDS. GO TO www.dot.ca.gov/hq/eqsc TO VIEW EQUIPMENT QUALITY STANDARDS.
2. ALL JOINTS TO BE WELDED CONTINUOUS UNLESS OTHERWISE SPECIFIED. SIZE OF ALL WELDS TO BE AT LEAST THE THICKNESS OF THE THINNER OF THE ADJACENT METALS. WELDS TO BE UNIFORM AND NEAT IN APPEARANCE.

△3 PRIOR TO DRILLING FRAME, ALIGN ITEM 203 TO BE PARALLEL TO GROUND WHEN ITEM 205 IS IN CONTACT WITH FRAME RAIL.

△4 WIRE-TIE OR BOLT #207 AND #208 TO ASSEMBLY 201 FOR SHIPPING.

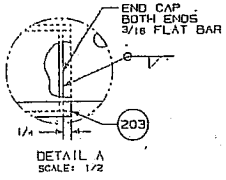

DETAIL A

SCALE: 1/2

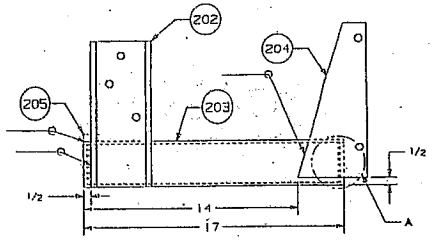

ITEM 201

RIGHT SHOWN, LEFT OPPOSITE

SCALE: 1/4

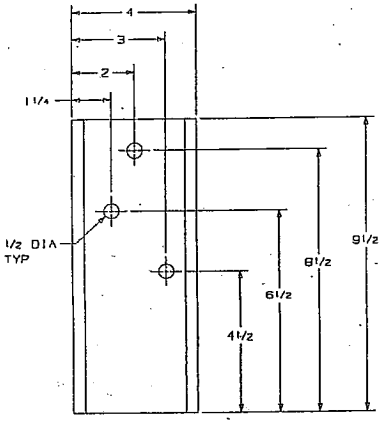

ITEM 202

RIGHT SHOWN, LEFT OPPOSITE

SCALE: 1/2

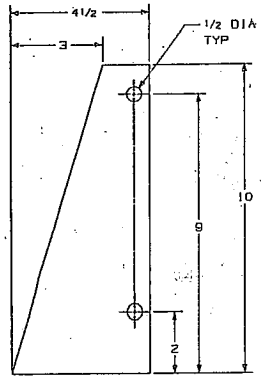

ITEM 204

SCALE: 1/2

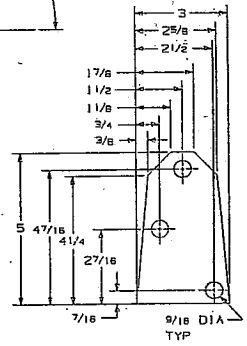

ITEM 207 △4

SCALE: 1/2

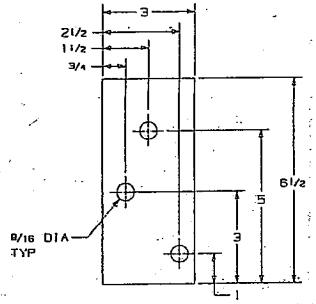

ITEM 208 △4

SCALE: 1/2

CT STK# 051-3330 (ITEMS 201,207,208)

PE 32-12-5367

REV	DATE	DESCRIPTION	BY
A	04/05	CORRECTED ITEM NUMBERS IN ASSY VIEW CLARIFY NOTE 3.	MATSUO

NEXT ASSEMBLY

TOLERANCE UNLESS OTHERWISE SPECIFIED: DECIMAL ±, FRACTIONAL ±, ANGULAR ±, DRILLED HOLES ±, REAMED HOLES ±

STATE OF CALIFORNIA
DEPARTMENT OF TRANSPORTATION
DIVISION OF EQUIPMENT

PUSH BUMPER MOUNT
2005 2500HD, 3500HD, DODGE 2WD &4WD

SCALE AS NOTED	DATE 7/23/03	1-00806-PB2
DRAWN DONNIN	DESIGNED WHEELER	
TRACED	APPROVED	SHEET 1 OF 1 SHEETS

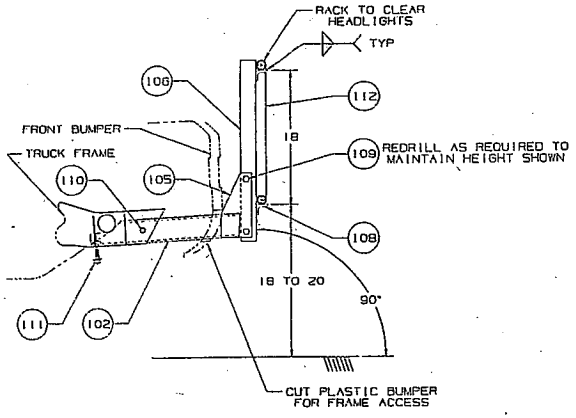

ASSEMBLY 101
INSTALLATION
SCALE : 1/8

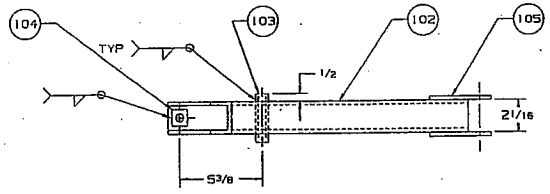

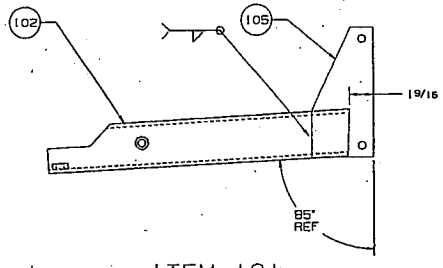

ITEM 101
SCALE : 1/4

SINGLE UNIT

BILL OF MATERIALS

ITEM	QTY	DESCRIPTION
101	2	ASSY C/O 102 TO 111
102	1	3 x 2 x .188 x 19 1/2 LG STL REC TUBING
103	1	1/2 DIA x 2 15/16 LG SCH 40 BLK STL PIPE
104	1	1/2 x 1 x 1 LG HRS FLAT BAR
105	2	3/16 x 4 x 8 1/2 LG HRS PLATE
106	1	2 x 2 x .188 x 24 LG STL SQ TUBING
107	2	12 GA x 1 7/8 x 1 7/8 LG SHEET STL CAP
108	2	1 1/2 x 1 1/2 x 1/4 x 2 LG STL ANGLE
109	2	1/2-13UNC x 3 LG HEX HD BOLT GRADE 8 W/ FLAT WASHERS & LOCK NUT
110	1	1/2-13UNC x 4 LG HEX HD BOLT GRADE 8 W/ FLAT WASHERS & LOCK NUT
111	1	1/2-13UNC x 1 3/4 LG HEX HD BOLT GRADE 8 W/ FLAT WASHER
112	1	CONE CARRIER RACK CT STK #051-2283 DWG # E2-0144-01
113		

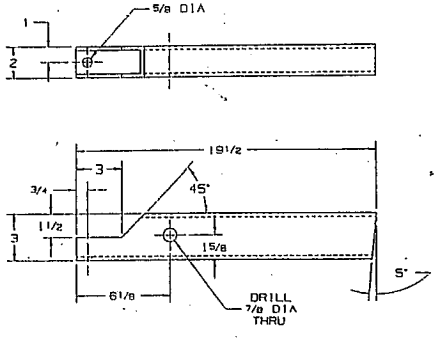

ITEM 102
SCALE : 1/4

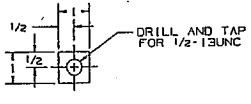

ITEM 104
SCALE : 1/2

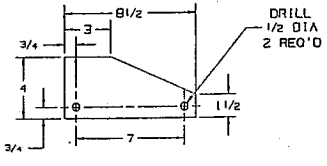

ITEM 105
SCALE : 1/4

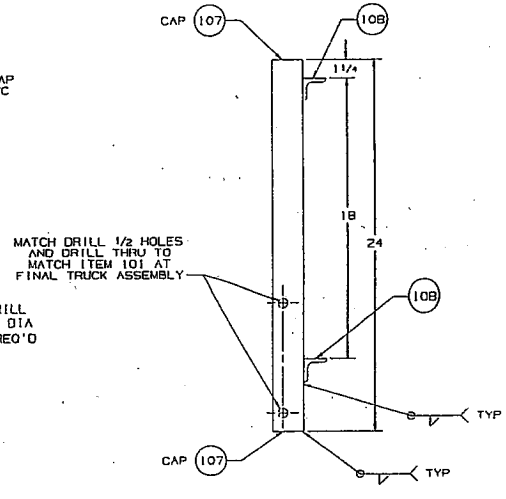

ITEM 106
SHIP LOOSE W/ ITEM 101
SCALE : 1/4

NOTES:

1. ALL JOINTS TO BE WELDED CONTINUOUS UNLESS OTHERWISE SPECIFIED. SIZE OF ALL WELDS TO BE AT LEAST THE THICKNESS OF THE THINNER OF THE ADJACENT METALS.
2. ALL WELDS, ELECTRICAL AND PAINT WILL BE IN COMPLIANCE WITH CALTRANS EQUIPMENT QUALITY STANDARDS. GO TO www.dot.ca.gov/hq/eqsc TO VIEW EQUIPMENT QUALITY STANDARDS.

PE 32-12-5367

REV	DATE	DESCRIPTION	BY
B	12/06	CHANGED THE NOTCH IN ITEM #102 WAS 1 3/8 x 2 3/4	JDR
A	10/03	MOVED 7/8 HOLE IN ITEM #102 FROM 8 7/8 TO 8 1/8	JDR

NEXT ASSEMBLY
REVISED FOR 03 RUN

STATE OF CALIFORNIA
DEPARTMENT OF TRANSPORTATION
OFFICE OF EQUIPMENT
CONE CARRIER MOUNT
2003 2500HD GM

TOLERANCE UNLESS OTHERWISE SPECIFIED
DECIMAL ± .XX
FRACTIONAL ± 1/16
ANGULAR ± 1°

SCALE AS NOTED | DATE 05/05/03 | 1-008GM-CC1
DRAWN J. RIME | DESIGNED CAL S.
CHECKED | APPROVED | SHEET 1 OF 1 SHEETS

CT STK #051-3315 ITEM 101 R & L

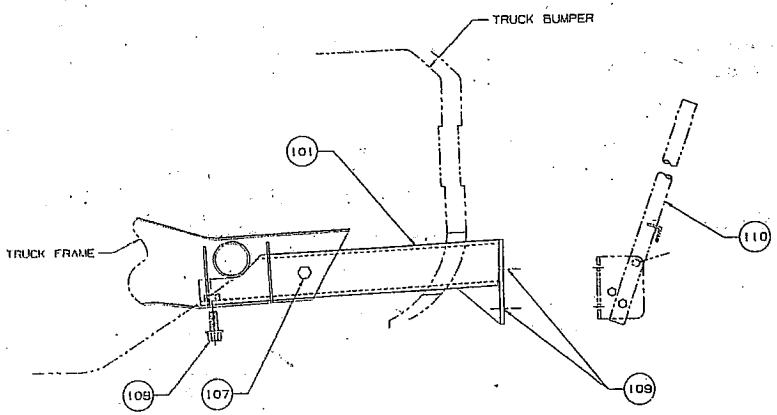

ASSEMBLY 101
DRIVER'S SIDE - SHOWN
SCALE : 1/4

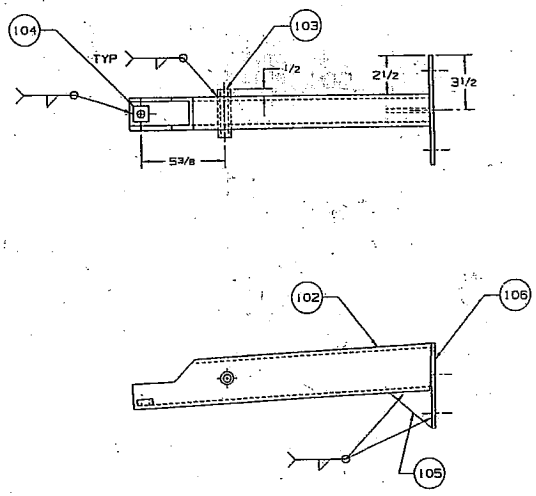

ITEM 101
SCALE : 1/4

SINGLE UNIT

BILL OF MATERIALS

ITEM	QTY	DESCRIPTION
101	2	ASSY C/O 102 TO 109
102	1	3 x 2 x .188 x 19 1/2 LG STL REC TUBING
103	1	1/2 DIA x 2 15/16 LG SCH 40 BLK STL PIPE
104	1	1/2 x 1 x 1 LG HRS FLAT BAR
105	1	1/4 x 2 3/8 x 2 1/2 LG HRS PLATE
106	1	1/4 x 5 1/2 x 7 LG HRS PLATE
107	1	1/2-13UNC x 4 LG HEX HD BOLT GRADE 8 W/ FLAT WASHERS & LOCK NUT
108	1	1/2-13UNC x 1 3/4 LG HEX HD BOLT GRADE 8 W/ FLAT WASHER
109	4	3/8-16UNC x 1 1/2 LG HEX HD BOLT GRADE 8 W/ FLAT WASHERS & LOCK NUT
110	2	CONE HOLDER CT STK #051-1748 DWG #E2-0128-01
111		

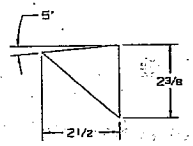

ITEM 105
SCALE : 1/2

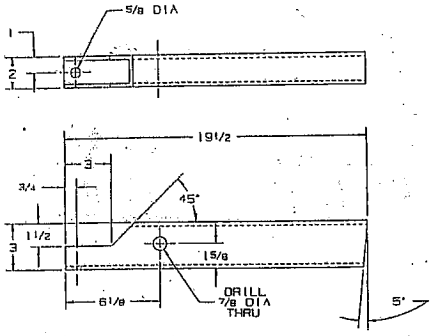

ITEM 102
SCALE : 1/4

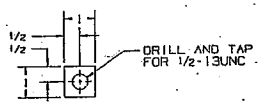

ITEM 104
SCALE : 1/2

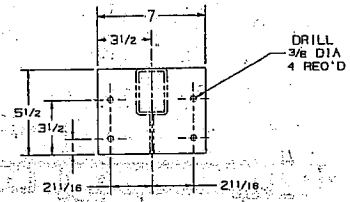

ITEM 106
SCALE : 1/2

NOTES:

1. ALL JOINTS TO BE WELDED CONTINUOUS UNLESS OTHERWISE SPECIFIED. SIZE OF ALL WELDS TO BE AT LEAST THE THICKNESS OF THE THINNER OF THE ADJACENT METALS.
2. ALL WELDS, ELECTRICAL AND PAINT WILL BE IN COMPLIANCE WITH CALTRANS EQUIPMENT QUALITY STANDARDS. GO TO www.dot.ca.gov/hq/eqsc TO VIEW EQUIPMENT QUALITY STANDARDS.

PE 32-12-5367

REV	DATE	DESCRIPTION	BY
B	12/06	CHANGED THE NOTCH IN ITEM #102 WAS 1¾ x 2¾	JDR
A	10/03	MOVED 7/8 HOLE IN ITEM #102 FROM 6⅞ TO 6⅛	JDR

NEXT ASSEMBLY
REVISED FOR 03 RUN

STATE OF CALIFORNIA
DEPARTMENT OF TRANSPORTATION
DIVISION OF EQUIPMENT

CONE HOLDER MOUNT ASSEMBLY
2003 2500HD GM

TOLERANCES UNLESS OTHERWISE SPECIFIED
DECIMAL ± .xx
FRACTIONAL ± 1/16
ANGULAR ± 1°

SCALE AS NOTED | DATE 05/01/03
DRAWN J. RIVE | DESIGNED CAL S.
CHECKED | APPROVED

1-008GM-CH1

SHEET 1 OF 1 SHEETS

CT STK #051-3317 ITEM 101 R & L

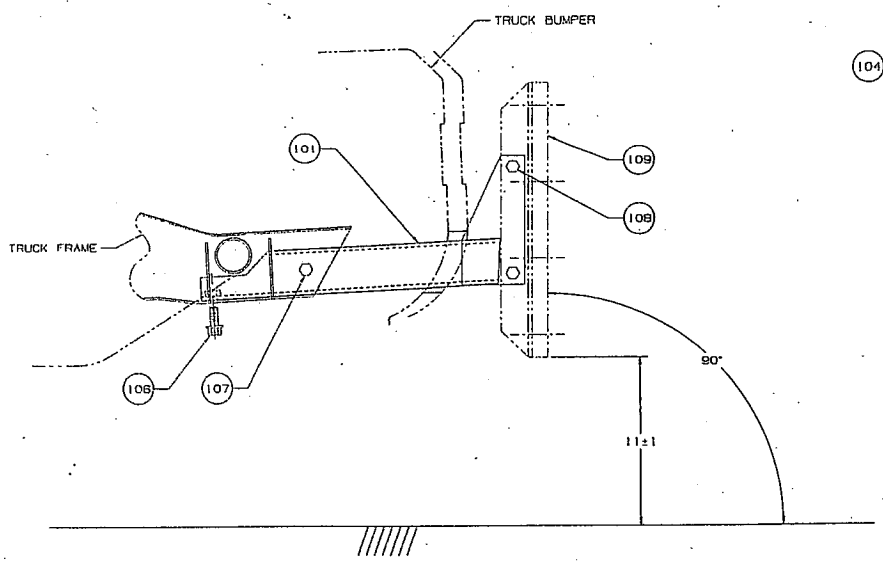

ASSEMBLY 101
DRIVER'S SIDE - SHOWN
SCALE : 1/4

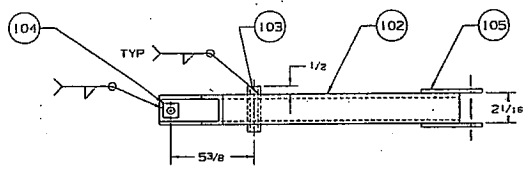

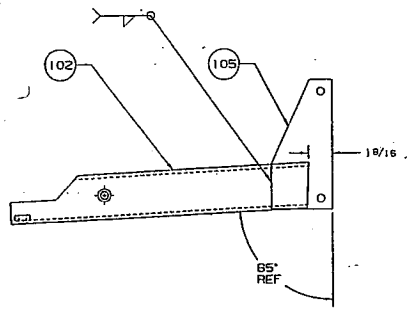

ITEM 101
SCALE : 1/4

SINGLE UNIT

BILL OF MATERIALS

ITEM	QTY	DESCRIPTION
101	2	ASSY C/O 102 TO 108
102	1	3 x 2 x .188 x 19 1/2 LG STL REC TUBING
103	1	1/2 DIA x 2 15/16 LG SCH 40 BLK STL PIPE
104	1	1/2 x 1 x 1 LG HRS FLAT BAR
105	2	3/16 x 4 x 8 1/2 LG HRS PLATE
106	1	1/2-13UNC x 1 3/4 LG HEX HD BOLT GRADE 8 W/ FLAT WASHER
107	1	1/2-13UNC x 4 LG HEX HD BOLT GRADE 8 W/ FLAT WASHERS & LOCK NUT
108	2	1/2-13UNC x 3 LG HEX HD BOLT GRADE 8 W/ FLAT WASHERS & LOCK NUT
109	2	PUSH BUMPER DWG #E2-C105-01 CT STK #051-2103
110		

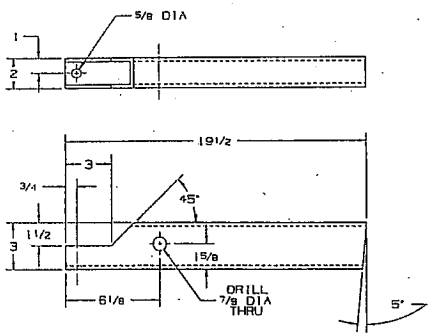

ITEM 102
SCALE : 1/4

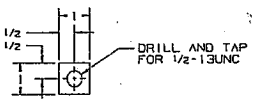

ITEM 104
SCALE : 1/2

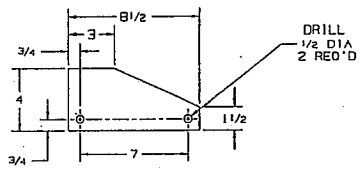

ITEM 105
SCALE : 1/2

NOTES:

1. ALL JOINTS TO BE WELDED CONTINUOUS UNLESS OTHERWISE SPECIFIED. SIZE OF ALL WELDS TO BE AT LEAST THE THICKNESS OF THE THINNER OF THE ADJACENT METALS.
2. ALL WELDS, ELECTRICAL AND PAINT WILL BE IN COMPLIANCE WITH CALTRANS EQUIPMENT QUALITY STANDARDS. GO TO www.dot.ca.gov/hq/eqsc TO VIEW EQUIPMENT QUALITY STANDARDS.

PE 32-12-5367

CT STK #051-2316 ITEM 101 R & L

REV	DATE	DESCRIPTION	BY
B	12/06	CHANGED THE NOTCH IN ITEM #102 WAS 1 3/8 x 2 3/4	JDR
A	10/03	MOVED 7/8 HOLE IN ITEM #102 FROM 6 7/8 TO 6 1/8	JDR

NEXT ASSEMBLY
REVISED FOR 03 RUN

STATE OF CALIFORNIA
DEPARTMENT OF TRANSPORTATION
DIVISION OF EQUIPMENT

PUSH BUMPER MOUNT
2003 2500HD GM

TOLERANCE UNLESS OTHERWISE SPECIFIED
DECIMAL ± .xx
FRACTIONAL ± 1/16
ANGULAR ± 1°

SCALE AS NOTED | DATE 05/01/03
DRAWN J. AIME | DESIGNED CAL S.
CHECKED | APPROVED

1-00BGM-PB1

SHEET 1 OF 1 SHEETS

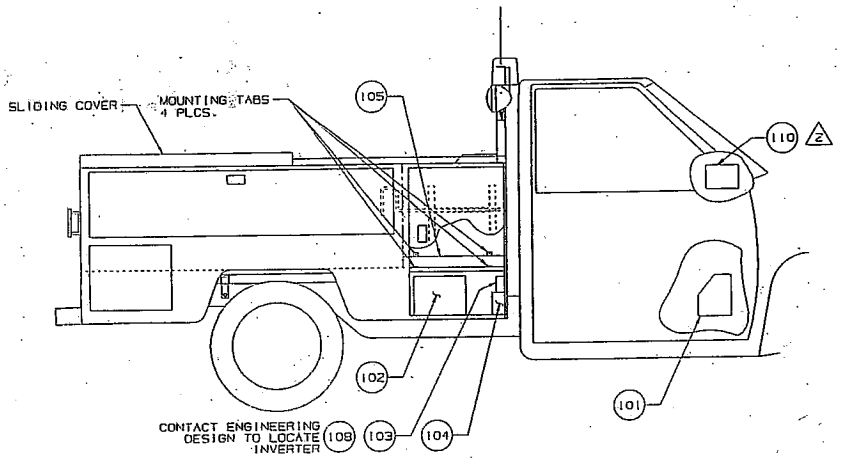

RIGHT VIEW

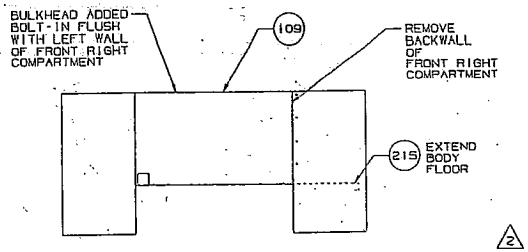

SECTION A-A

BILL OF MATERIALS		
ITEM	QTY	DESCRIPTION
101	1	CONSOLE, RADIO DWG.# U1-D013-01
102	1	BATTERY (W/HOLD-DOWN) PER ITEM 108
103	1	OUTLET, 110 VOLT AC
104	1	BOX, BREAKER
105	1	2½ x 2½ x .125 WALL SQ TUBE
106	6	8" X 66 LG PVC TUBE
107	1	HOLDER, CONE CT# 051-1748
108	1	INVERTER, 1800 WATT INSTALL PER ELECTRICAL SCHEMATIC DWG.# U1-D008-01 WIRE ONE (1) BATTERY ONLY
109	1	16 GA GALVANIZED STEEL SHEET
2 110	1	DIGITAL MEASUREMENT INSTRUMENT REF JAMAR TECH #RAC-100-MS-K

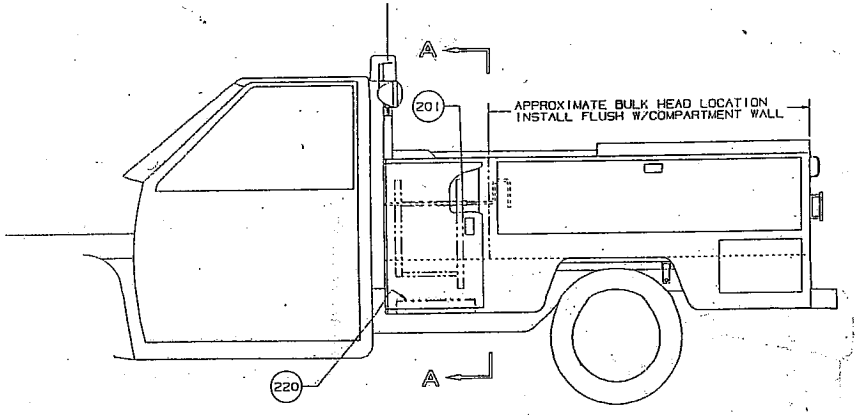

LEFT VIEW

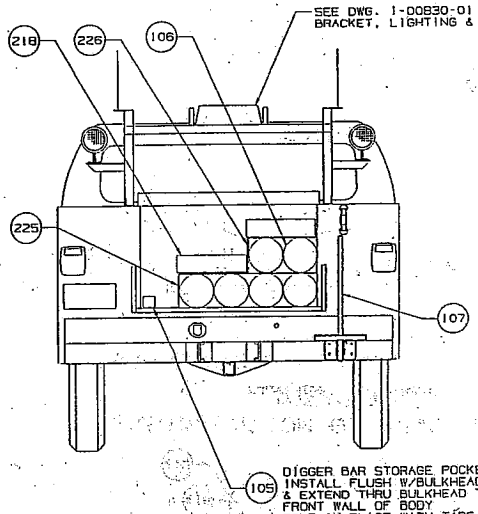

REAR VIEW

NOTES:

1- ALL JOINTS TO BE WELDED CONTINUOUS UNLESS OTHERWISE SPECIFIED. SIZE OF ALL WELDS TO BE AT LEAST THE THICKNESS OF THE THINNER OF THE ADJACENT METALS.

2 VENDOR:
JAMAR TECHNOLOGIES, INC.
151 KEITH VALLEY RD.
HORSHAM, PA. 13044
(800) 776-0940 OR WWW.JAMARTECH.COM

PE 32-12-5367

REV	DATE	DESCRIPTION	BY
A	12/04	ITEM 110 EDITED BOM DESC & ADDED VENDOR INFO NOTE; ADDED SLIDING COVER NOTE	SPARTZ

NEXT ASSEMBLY

TOLERANCE UNLESS OTHERWISE SPECIFIED: DECIMAL ± FRACTIONAL ± ANGULAR ± DRILLED HOLES ± REAMED HOLES ±

STATE OF CALIFORNIA
DEPARTMENT OF TRANSPORTATION
DIVISION OF EQUIPMENT

SURVEYOR'S UTILITY BODY
MC 00835, 01035, 10835, 11035

SCALE AS NOTED | DATE 05/24/02 | 1-00835UR-1

DRAWN DOMAIN | DESIGNED WHEELER

CHECKED | APPROVED

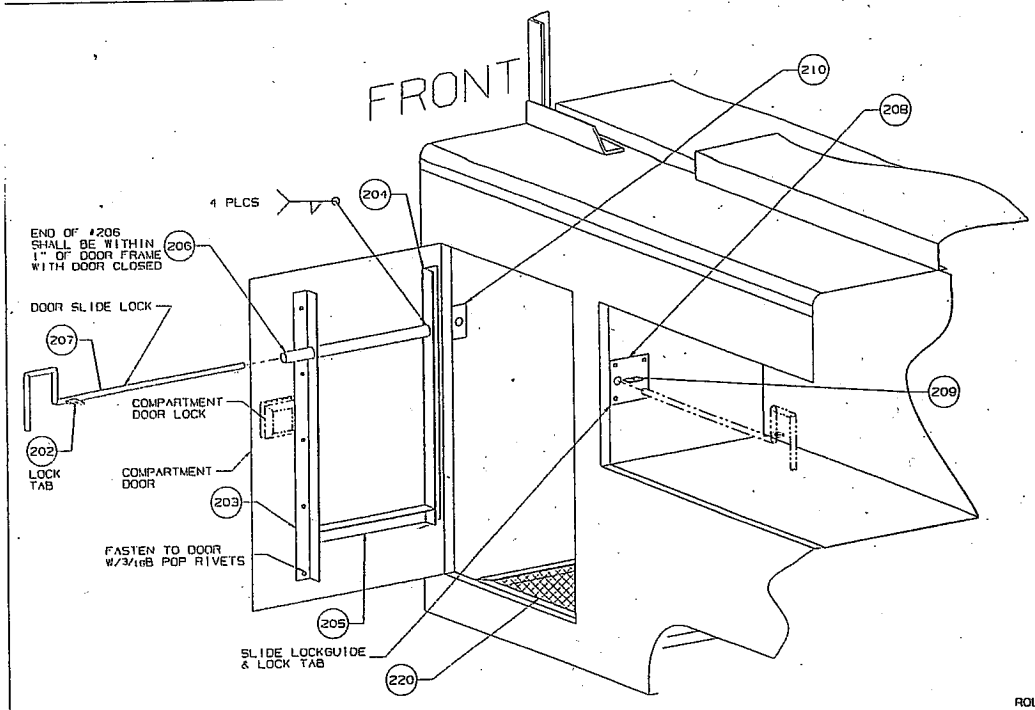

ITEM 201

DOOR REINFORCEMENT & SLIDE LOCK

TYPICAL BOTH SIDE FRONT COMPARTMENTS

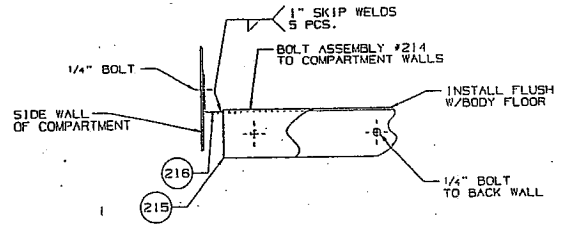

INSTALLATION OF #215 & #216

FLOOR EXTENSION FRONT RIGHT COMPARTMENT

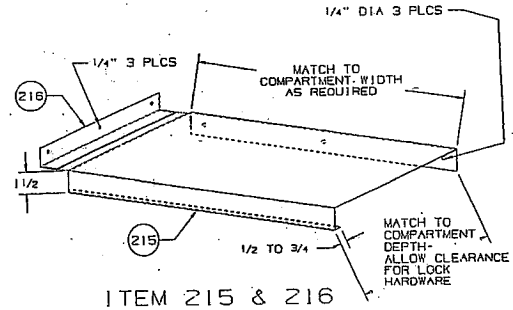

ITEM 215 & 216

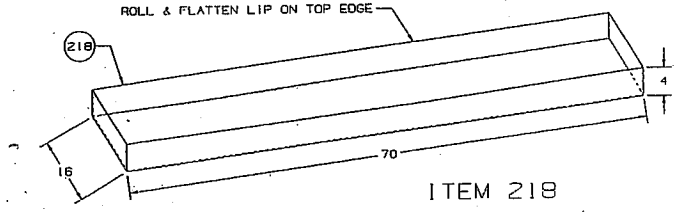

ITEM 218

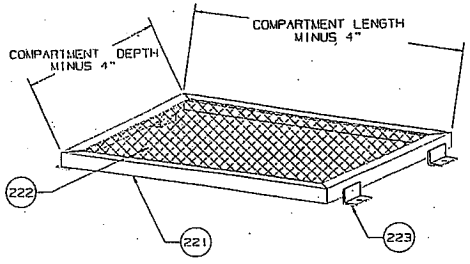

ITEM 220

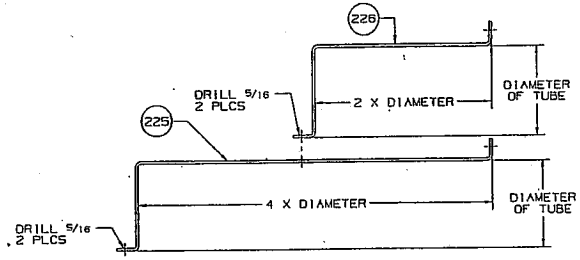

ITEM 225 & 226

BILL OF MATERIALS

ITEM	QTY	DESCRIPTION
201	2	WLD'D ASSEMBLYS C/O ITEMS 202-210
202	1	1/8 x 1 x 1 1/2 LG FLAT BAR
203	1	1/8 x 1 1/2 x 1 1/2 x AR LG STEEL ANGLE
204	1	1/8 x 1 1/2 x 1 1/2 x AR LG STEEL ANGLE
205	1	1/8 x 1 1/2 x 1 1/2 x AR LG STEEL ANGLE
206	1	3/4 SCH. 40 x AR LG BLACK PIPE
207	1	1/2 DIA x AR LG CR STEEL
208	2	1/8 x 3 x 3 LG FLAT PLATE
209	1	1/8 x 1 x 1 1/2 LG FLAT BAR
210	1	1/8 x 1 1/2 x 3 FLAT BAR
211		
212		
213		
214		
215	1	16 GA GALVANIZED STEEL
216	2	1/8 x 1 1/2 x 1 1/2 x AR LG ANGLE
217		
218	2	WELDED ASS'Y 16 GA GALVANIZED STEEL
219		
220	1	WELDED ASS'Y C/O ITEMS 221-223
221	AR	1/8 x 1 x 1 ANGLE
222	AR	3/4-14 FLATTENED EXPANDED METAL
223	4	1/8 x 1 x 1 x 1 1/2 STL. ANGLE
224		
225	2	1/8 x 2 x AR FLATBAR
226	2	1/8 x 2 x AR FLATBAR

PE 32-12-5367

REV	DESCRIPTION	BY
NEXT ASSEMBLY		

STATE OF CALIFORNIA
DEPARTMENT OF TRANSPORTATION
DIVISION OF EQUIPMENT

SURVEYOR'S UTILITY BODY
MC 00835, 01035, 10835, 11035

SCALE AS NOTED | DATE 08/24/02 | 1-00835UR-2

DRAWN DORNIN | DESIGNED WHEELER

CHECKED | APPROVED | SHEET 2 OF 2 SHEETS

TOLERANCE UNLESS OTHERWISE SPECIFIED
DECIMAL ±
FRACTIONAL ±
ANGULAR ±
DRILLED HOLES ±
REAMED HOLES ±

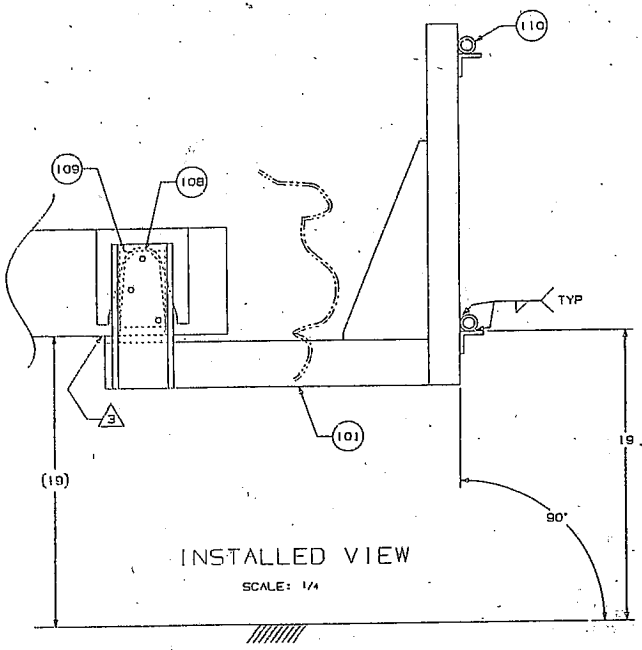

INSTALLED VIEW

SCALE: 1/4

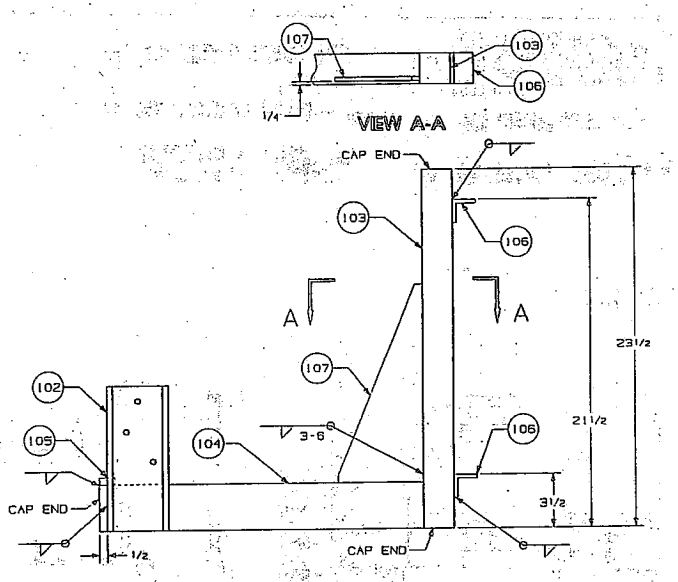

ITEM 101

PASSENGER SIDE SHOWN, DRIVER SIDE OPPOSITE.

SCALE: 1/4

BILL OF MATERIALS

ITEM	QTY	DESCRIPTION
101	2	WLD'D ASSY C/O ITEMS 102-107 (LEFT & RIGHT)
102	1	4 X 5.4# X 9 1/2 LG CHANNEL
103	1	2 x .188W x 23 1/2 LG STL SQ TUBG
104	1	2 x 3 .188W x 21 LG STL RECT TUBG
105	1	1/2 x 1 x 2 LG HRS FLATBAR
106	2	1 1/2 x 1 1/2 x 1/4 x 2 LG STD STL ANGLE
107	1	1/4 x 5 1/2 x 13 LG HRS FLATBAR
108	2	1/8 x 3 x 5 LG HRS STRIP
109	2	1/4 x 3 x 6 1/2 LG HRS FLATBAR
110	1	RACK, MOUNTING, CT STK# 051-2283

NOTES:

1. ALL WELDS, ELECTRICAL AND PAINT WILL BE IN COMPLIANCE WITH CALTRANS EQUIPMENT QUALITY STANDARDS. GO TO www.dot.ca.gov/hq/eqsc TO VIEW EQUIPMENT QUALITY STANDARDS.
2. ALL JOINTS TO BE WELDED CONTINUOUS UNLESS OTHERWISE SPECIFIED. SIZE OF ALL WELDS TO BE AT LEAST THE THICKNESS OF THE THINNER OF THE ADJACENT METALS. WELDS TO BE UNIFORM AND NEAT IN APPEARANCE.

(3) PRIOR TO DRILLING FRAME, ALIGN ITEM 104 TO BE PARALLEL TO GROUND WHEN ITEM 105 IS IN CONTACT WITH FRAME RAIL.

(4) WIRE-TIE OR BOLT #108 AND #109 TO ASSEMBLY 101 FOR SHIPPING.

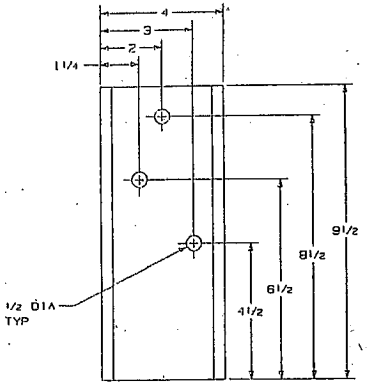

ITEM 102

SCALE: 1/2

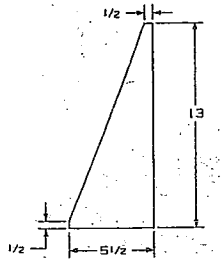

ITEM 107

SCALE: 1/2

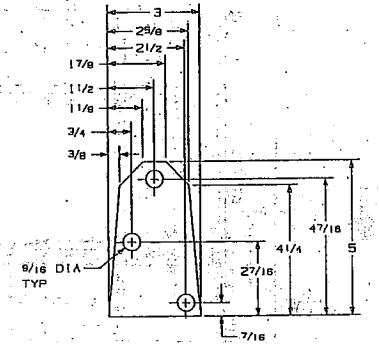

ITEM 108 (4)

SCALE: 1/2

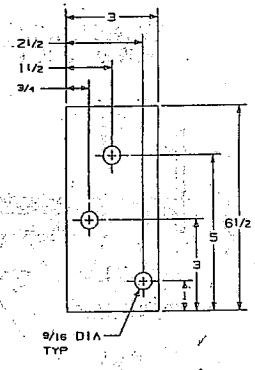

ITEM 109 (4)

SCALE: 1/2

CT STK #051-3336 (ITEMS 101, 108, 109)

PE 32-12-5367

REV	DESCRIPTION	BY
NEXT ASSEMBLY		

STATE OF CALIFORNIA
DEPARTMENT OF TRANSPORTATION
DIVISION OF EQUIPMENT

CONE RACK MOUNT
2005 2500HD, 3500HD, DODGE 4WD

SCALE AS NOTED	DATE 2/23/05	1-1080G-CC2
DRAWN DOKNIN	DESIGNED WHEELER	
CHECKED	APPROVED	SHEET 1 OF 1 SHEETS

TOLERANCES UNLESS OTHERWISE SPECIFIED
DECIMAL .x ±
FRACTIONAL x ±
ANGULAR ±
DRILLED HOLES ±
REAMED HOLES ±

(111) CONE HOLDER OPTION (NOT SHOWN)
(112) PUSH BUMPER OPTION (SHOWN)
(113) CONE CARRIER OPTION (NOT SHOWN)

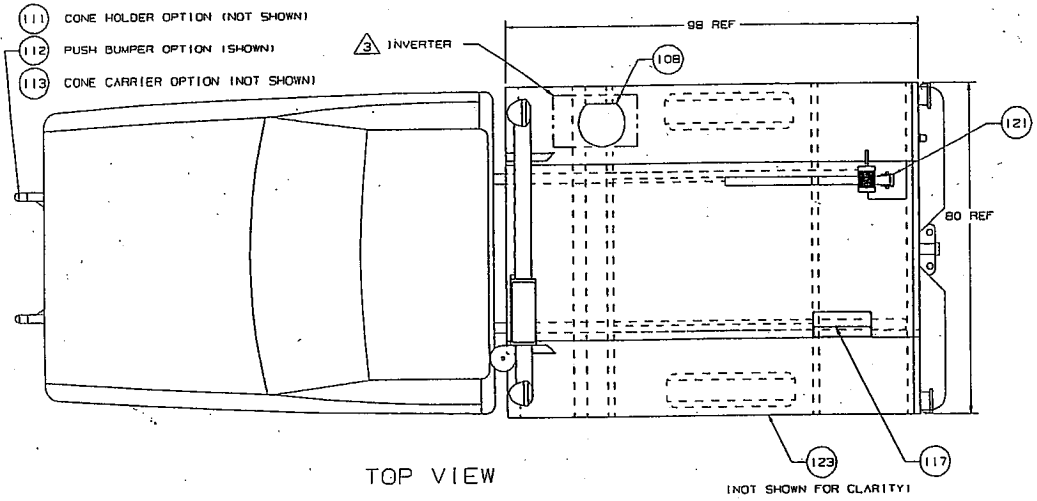

TOP VIEW

(NOT SHOWN FOR CLARITY)

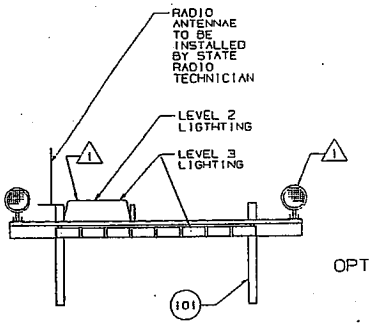

LIGHT RACK ACCESSORIES

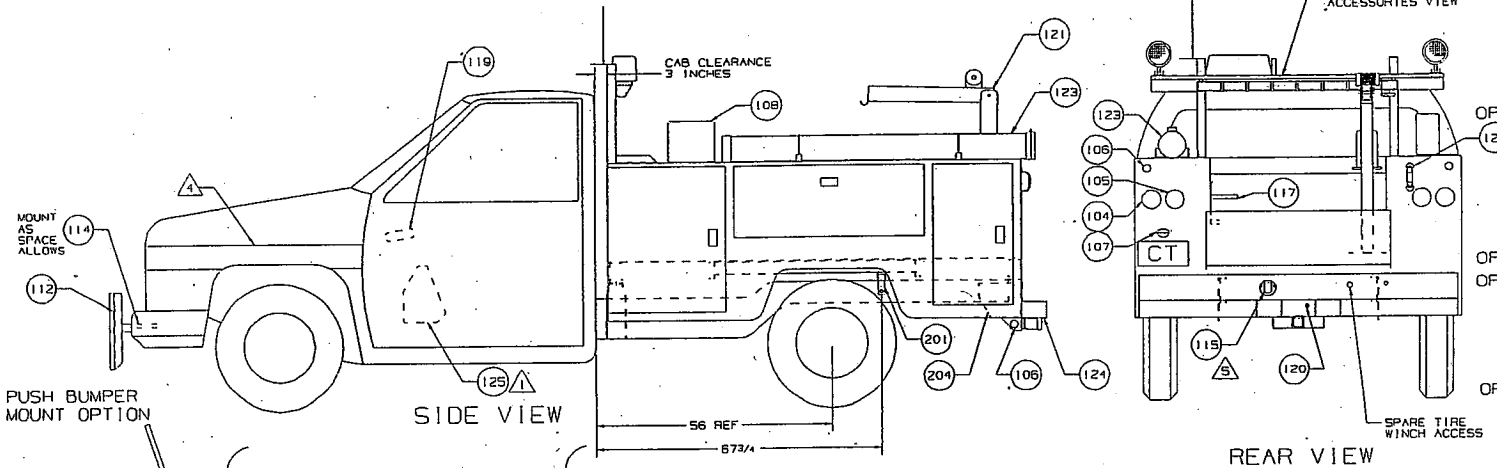

SIDE VIEW

PUSH BUMPER MOUNT OPTION

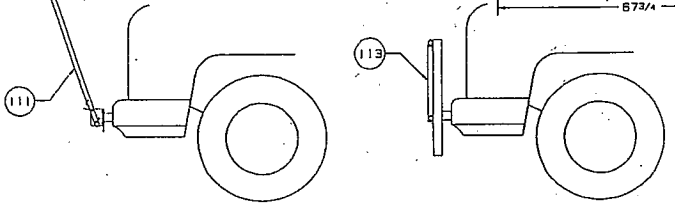

CONE HOLDER MOUNT OPTION

CONE CARRIER RACK MOUNT OPTION

REAR VIEW

NOTES:

1. SEE DRAWING UI-D016-01 FOR WIRING AND PART NUMBERS SEE DRAWING UI-D025-01 FOR CONSOLE INSTALLATION
2. SEE DRAWING D2-D609-01_2 (GM) FOR PLOW INSTALLATION
3. SEE DRAWING UI-D022-01 FOR INVERTER INSTALLATION
4. SEE DRAWING 1-00BU8-DE FOR STRIPING & DECAL INSTALLATION
5. SEE DRAWING UI-A10-01 FOR SOCKET INSTALLATION
6. FORD ONLY: TRUCK EQUIPPED WITH ONE OR MORE OPTIONS 111, 112, 113 ALSO REQUIRE ONE PAIR OF: 051-3390(L) & 051-3391(R) DWG# F1-08-00BFD-FM2

BILL OF MATERIALS

ITEM	QTY	DESCRIPTION	MANUF	CT NO.
101	1	LIGHT RACK, DWG# P2-0071-01		051-3278
104	2	LIGHTS, STOP,TURN & TAIL LED	TRUCK-LITE 44082R	034-4824
105	2	LIGHT, BACK-UP LED	TRUCK-LITE 40004	034-1290
106	4	LIGHT, CLEARANCE LED	TRUCK-LITE 10050R	034-4880
107	1	LIGHT, LICENSE	TRUCK-LITE 15040	034-4887
108	1	WATER CAN HOLDER DWG# E2-0223-01		051-1946
111	1	CONE HOLDER ASSEMBLY HOLDER DWG# E2-0129-01 & BRKT. AS REQ'D:		051-1748
	lea	DWG 1-008DG-CH2		051-3338 051-3339
	2	DWG 1-008GM-CH1		051-3317
OPTION 6	2	DWG F1-08-008FD-CH		051-3394
112	1	PUSH BUMPER BRACKET BUMPER DWG# E2-C105-01 & BRKT AS REQ'D:		051-2103
	lea	DWG# 1-008DG-PB2, 2&4WD		051-3330 051-3331
	2	DWG# 1-008GM-PB1, 2&4WD		051-3316
OPTION 6	2	DWG# F1-08-008FD-FM1, 2&4WD DWG# F1-08-008FD-PB1, 2&4WD		051-3392
113	1	CONE CARRIER RACK BRACKET CONERACK DWG# E2-0144-01 & ONE OF:		051-2283
	lea	DWG# 1-008DG-CC2, 2WD		051-3324 051-3325
	lea	DWG# 1-108DG-CC2, 4WD		051-3339 051-3337
	2	DWG# 1-008GM-CC1, 2&4WD		051-3315
OPTION 6	2 2	DWG# F1-08-008FD-FM1, 2&4WD DWG# F1-08-008FD-CC1, 2&4WD		051-3392 051-3393
OPTION 114	1	BATTERY JUMPER KIT CONNECTOR COVER	SAFETY CONNECT 4405 4253-4 4411	032-4776 032-4771 034-4724
OPTION 5 115	1	SOCKET, 7-WIRE & BOOT DWG# UI-A010-01	COLE-HERSEE 12310 91356	034-1265 034-4096
117	1	CHOCK BLOCK RACK DWG# E2-0143-01		051-2150
OPTION 119	1	BRAKE CONTROLLER	TEKONSHA TKP0MO	013-1324
OPTION 121	1	CRANE, 1000#	HAYDEN FREIGHT 3955	088-1388
122	1	HANDLE, GRAB	ULMASTER-CATE 8020433	051-1650
123	1	ROUND PVC SIGN TUBE DWG# E2-0254-01		051-3274
124	1	BUMPER DWG# E2-0119-01		051-2039
OPTION 1 125	1	CONSOLE RADIO DWG# UI-D013-01,2,3		030-4839

PE 32-12-5367

REV		DESCRIPTION	BY
R	11/07	ADDED DWG F1-08-008** ADDED NOTE 6	DOWNIN
O	06/06	ADDED TO ITEMS 111, 112, AND 113 CHANGED NOTE 1	JDR
P	09/04	REVISED BOM	DOWNIN
O	05/03	REVISED FOR 2003 MODELS	JDR

NEXT ASSEMBLY

STATE OF CALIFORNIA
DEPARTMENT OF TRANSPORTATION
DIVISION OF EQUIPMENT
1-00830 UTILITY BODY ASSEMBLY

SCALE	NONE	DATE	8/14/00	1-00830-01
DRAWN	DOWNIN	DESIGNED CAL S.		
CHECKED		APPROVED		SHEET 1 OF 2 SHEETS

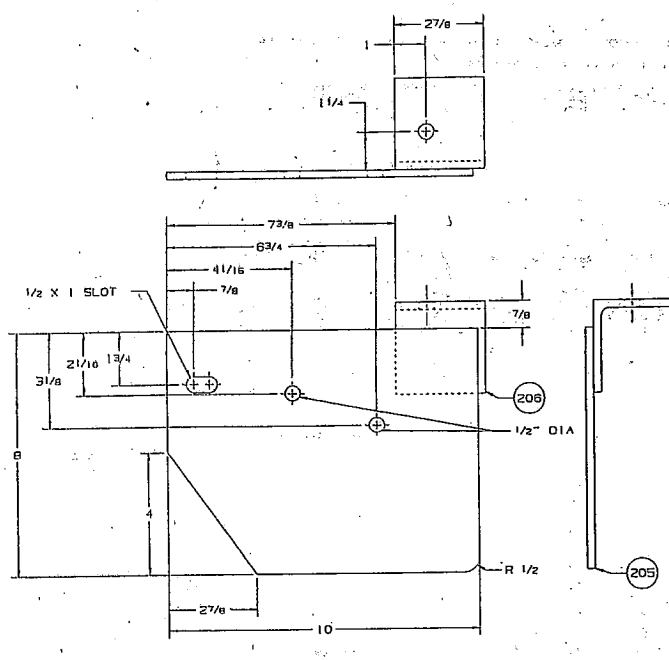

ITEM 204

REAR BUMPER-BODY BRACKET

LEFT SIDE SHOWN, RIGHT SIDE OPPOSITE

SCALE: 1/2

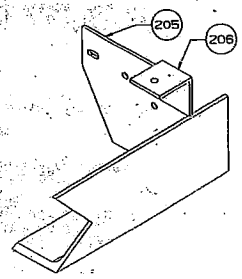

BUMPER MOUNT TO BUMPER ANGLE IRON

RIGHT SIDE SHOWN

SCALE: NONE

BILL OF MATERIALS		
ITEM	QTY	DESCRIPTION
201	2	WELDED ASSY C/O 202 & 203
202	2	1/4 x 1 1/2 x 5 LG HRS FLATBAR
203	2	2 x .250W x 2 LG STL SQ TUBG
204	2	WELDED ASSY C/O ITEMS 205 & 206
205	2	1/4 X 8 X 10 FLAT PLATE
206	2	1/4 x 3 x 3 x 27/8 LG ANGLE IRON

NOTES:

1. ALL JOINTS TO BE WELDED CONTINUOUS UNLESS OTHERWISE SPECIFIED. SIZE OF ALL WELDS TO BE AT LEAST THE THICKNESS OF THE THINNER OF THE ADJACENT METALS.

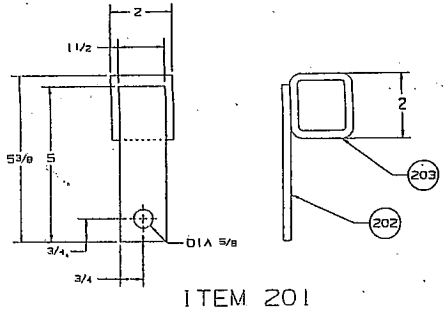

ITEM 201

MID-BODY BRACKET

2000 DODGE

SCALE: 1/2

PE 32-12-5367

REV	DESCRIPTION	BY

NEXT ASSEMBLY

STATE OF CALIFORNIA
DEPARTMENT OF TRANSPORTATION
EQUIPMENT SERVICE CENTER

1-00830 UTILITY BODY ASSEMBLY
2000 DODGE 2500

SCALE AS NOTED	DATE 8/21/00	1-00830-02
DRAWN DOHNIN	DESIGNED CAL S.	
CHECKED	APPROVED	

BILL OF MATERIALS

	ITEM	QTY	DESCRIPTION	CT DWG # / MF'R #	CT STK #
3 4	101	AS REQ'D	DECAL, REFLECTIVE ORANGE SHEET, 5" WIDE	3M SCOTCH-LITE #680-14	053-4813
5	102	2	DECAL, 'CT' WHITE REFLECTIVE, 9" X 12"	03-D001-01	053-4760
	103	1	DECAL, 'CALTRANS' ORANGE SCRIPT, 3"	03-D007-01	053-4802
6	104	2	DECAL, 'CALTRANS' BLACK SCRIPT, 2.5"	03-D005-01	053-4763
7	105	1	DECAL, 'CLEAN AIR VEHICLE'	03-D003-01	053-4756
	106	1	DECAL, 'SLOW FOR CONE ZONE'	X	053-4829
4	107	1	STRIPING, ORANGE/WHITE DIAG., REFLECTIVE, 8" x 8'	P2-D032-01 / AVERY-DENNISON #11	053-2047
	108	-	-	-	-
8 9	109	-	EQ. ID # & MC # DECALS - SPECIAL ORDER	-	053-4787
10	110	1	APPROPRIATE FUEL TYPE DECAL: 'UNLEADED FUEL ONLY' 'E-85 OR GASOLINE' 'DIESEL ONLY'	-	053-1510 053-4900 053-1511

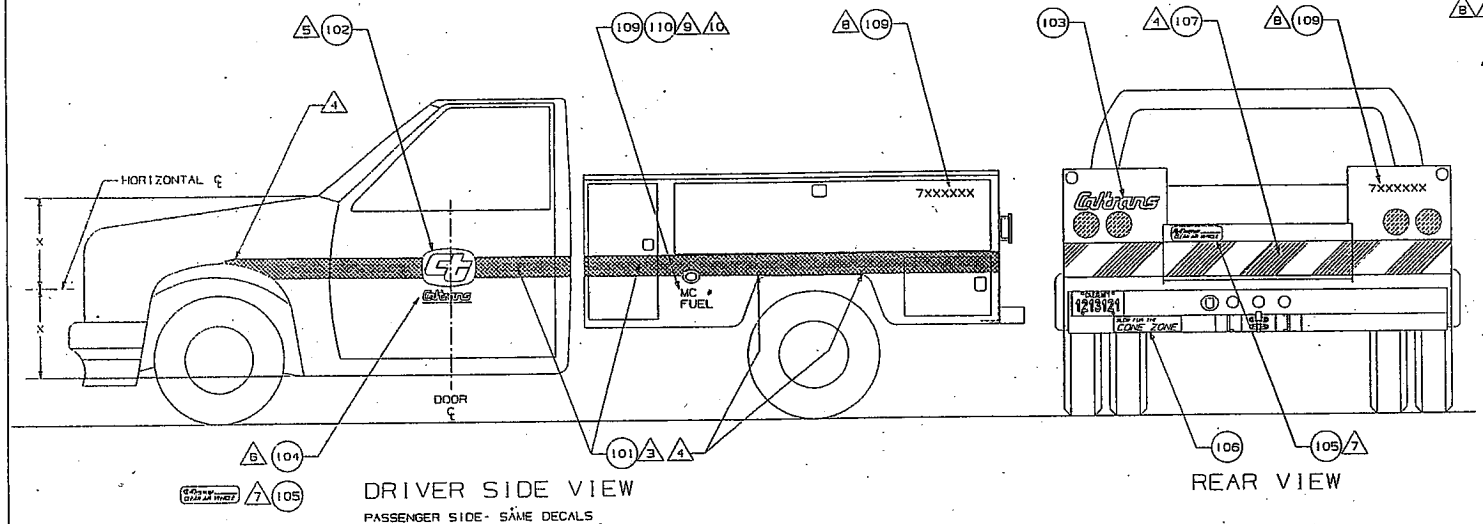

DRIVER SIDE VIEW

PASSENGER SIDE- SAME DECALS

REAR VIEW

NOTES:

1. ALL DELINEATION WILL BE IN COMPLIANCE WITH CALTRANS EQUIPMENT QUALITY STANDARDS. GO TO www.dot.ca.gov/hq/eqsc. TO VIEW EQUIPMENT QUALITY STANDARDS.
2. STRIPING APPLICATION: ALL STICKERS, LABELS AND STRIPING SHALL BE LEVEL, STRAIGHT, BUBBLE FREE AND FREE OF DEBRIS. NO SPLICING OF TAPE OR STRIPING SHALL BE ACCEPTABLE. ALL EDGES ON STRIPING SHALL BE TRIMMED 1/8 INCH FROM THE EDGES OF DOORS, PANELS, FENDERS, LIGHTS, EMBLEMS, ETC. ANY REFLECTIVE TYPE OF STRIPE OR STICKER MAY NOT BE PULLED FROM THE VEHICLE AND REAPPLIED DURING APPLICATION, SINCE THE REFLECTIVE MATERIAL WILL BE COMPROMISED.

△3 LOWER EDGE OF ITEM 101 TO BE LOCATED AS NEAR TO THE HORIZONTAL CENTER LINE OF THE VEHICLE AS BODY CUTOUT (FENDER WELLS) AND BODY CONTOUR LINES PERMIT. NEVER PLACE THE LOWER EDGE OF ITEM 101 BELOW THE HORIZONTAL CENTER-LINE OF THE VEHICLE.

△4 TRIM ORANGE REFLECTIVE SHEET (ITEM 101) AND STRIPING (ITEM 107) TO MATCH BODY CONTOURS AND CREASES.

△5 ITEM 102 TO BE LOCATED SUCH THAT "CT" LOGO IS CENTERED ON ITEM 101 AND CENTERED ON THE VERTICAL CENTER LINE OF THE DOOR.

△6 ITEM 104 TO BE LOCATED BELOW THE "CT" LOGO AND ALONG THE VERTICAL CENTERLINE OF THE DOOR.

△7 FOR CLEAN AIR VEHICLES ONLY. IF CLEAN AIR VEHICLE, REPLACE ITEM 104 WITH 105.

△8 SEVEN-DIGIT EQUIPMENT IDENTIFICATION NUMBER (EQ. ID #) ALWAYS STARTS WITH A '7' AND SHALL BE AFFIXED TO ALL FOUR SIDES OF EQUIPMENT IN UPPER RIGHT CORNERS. AN EXCEPTION IS THAT LOW PROFILE HOOD DESIGNS MAY MAKE IT DIFFICULT TO SEE THE NUMBERS FROM THE FRONT. AN ALTERNATE LOCATION IS THE RIGHT CORNER OF THE FRONT BUMPER (AS VIEWED FROM THE FRONT). THE FRONT NUMBERS ARE NOT MANDATORY BUT HIGHLY RECOMMENDED.

△9 FIVE-DIGIT MAINTENANCE CLASS NUMBER (MC #) SHALL BE AFFIXED BY THE FUEL FILLER.

△10 FUEL TYPE DECAL SHALL BE AFFIXED DIRECTLY BELOW THE MC # AND BY THE FUEL FILLER.

PE 32-12-5367

REV	DATE	DESCRIPTION	BY
E	12/06	ADDED ITEMS 109 & 110	SPARTZ
D	04/06	DRAWING STANDARDIZATION UPDATE	SPARTZ
C	May 03	ADDED ITEM 106	J Payne
B	06/02	ADDED 105 AND MOVED 103 FROM CENTERLINE	MATSUO
A	01/02	ITEM 101 580 TO 680	DOWNIN

NEXT ASSEMBLY
WAS 1-00BU8-DE

STATE OF CALIFORNIA
DEPARTMENT OF TRANSPORTATION
DIVISION OF EQUIPMENT

MC #: 00830
DELINEATION

SCALE NONE | DATE 12/04 | 1-00830-DE
DRAWN JOHNSON | DESIGNED WHEELER
CHECKED | APPROVED

BILL OF MATERIALS

ITEM	QTY	DESCRIPTION

NOTES:
1. ALL WELDS, ELECTRICAL AND PAINT WILL BE IN COMPLIANCE WITH CALTRANS EQUIPMENT QUALITY STANDARDS. GO TO www.dot.ca.gov/hq/eqsc TO VIEW EQUIPMENT QUALITY STANDARDS.

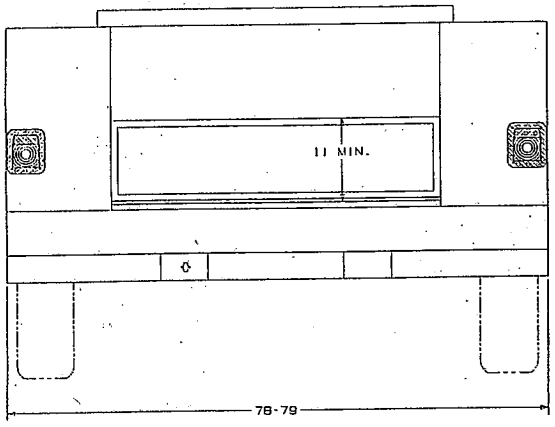

REAR END VIEW

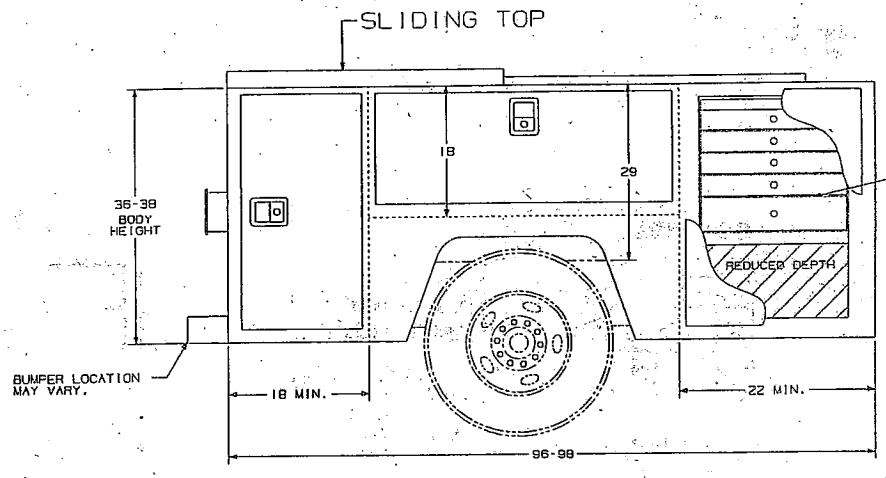

RIGHT SIDE VIEW

CAB

HEAVY DUTY LATCHING
ROLL OUT DRAWERS.
MINIMUM OF:

4-3" DEEP
1-5" DEEP

MAXIMIZE DRAWER WIDTH
AND NUMBER TO FIT DOOR OPENING.

REF. CTEC ROLL-OUT DRAWERS; CERTIFIED
TRUCK BODIES PART #RFDK,
OR AMERICAN EAGLE DRAWER SYSTEM.

PE 32-12-5367

REV	DESCRIPTION	BY

NEXT ASSEMBLY
X

STATE OF CALIFORNIA
DEPARTMENT OF TRANSPORTATION
DIVISION OF EQUIPMENT

MECHANICS TRUCK CABINET DETAIL

SCALE	NONE	DATE	12/13/07	1-00836-1
DRAWN JOHNSON		DESIGNED JOHNSON		
CHECKED		APPROVED		SHEET 1 OF 1 SHEETS

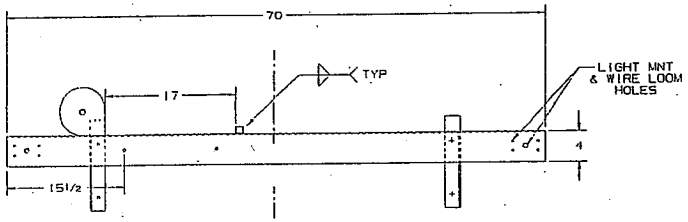

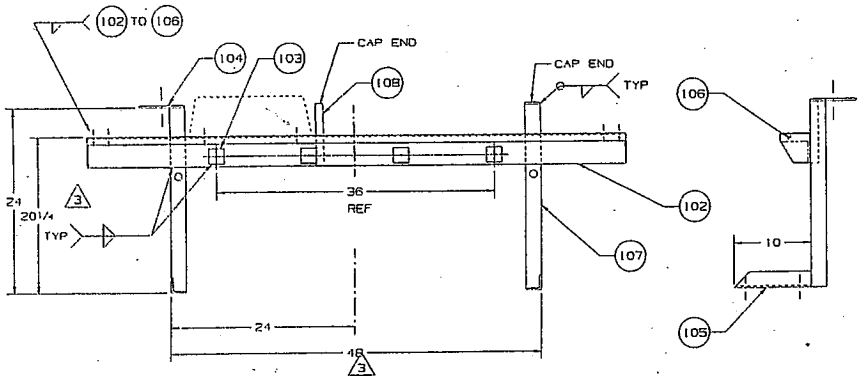

ASSEMBLY 101
SCALE : 1/8

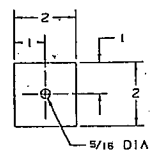

ITEM 103
LIGHT BAR SPACER
SCALE : 1/2

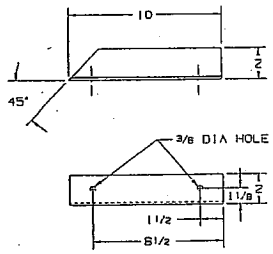

ITEM 105
RIGHT SIDE-SHOWN
LEFT SIDE-OPPOSITE
SCALE : 1/4

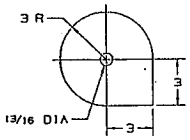

ITEM 104
SCALE : 1/4

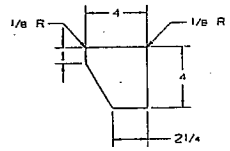

ITEM 106
SCALE : 1/4

BILL OF MATERIALS		
ITEM	QTY	DESCRIPTION
101	1	WLD'D ASSY CONSISTS OF 102 TO 108
102	1	12 GA x 9 x 70 LG SHEET STEEL
103	4	1/4 x 2 x 2 LG STL FLAT BAR
104	1	3/16 x 6 x 6 LG STL FLAT PLATE
105	2	1/8 x 2 x 2 x 10 LG STL ANGLE
106	2	12 GA x 4 x 4 LG SHEET STEEL
107	2	2 x 2 x .120 x 24 LG STL SQ TUBE
108	1	1 x 1 x .083 x 8 LG STL SQ TUBE

NOTES:

1. ALL JOINTS TO BE WELDED CONTINUOUS UNLESS OTHERWISE SPECIFIED. SIZE OF ALL WELDS TO BE AT LEAST THE THICKNESS OF THE THINNER OF THE ADJACEMENT METALS.

2 CONFIRM HOLE PATTERN MATCHES SUPPLIED LAMP ADJUST IF NECESSARY

3 WHEN BUILDING FOR KNOWN BODY & CHASIS- VERIFY FIT ON BODY AND 3rd STOP LIGHT VISIBILITY

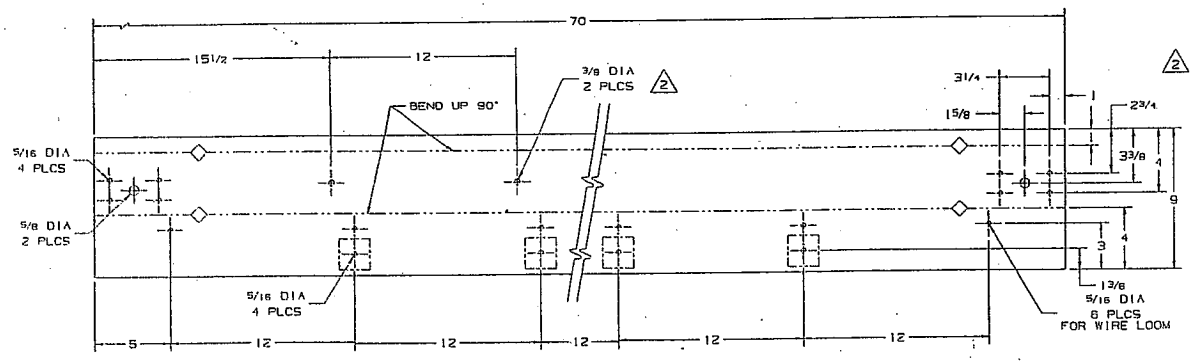

ITEM 102
SCALE : 1/4

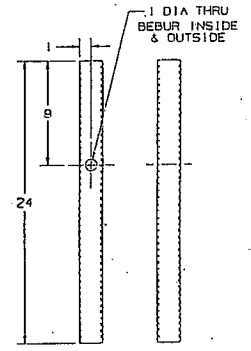

ITEM 107
SCALE : 3/16

PE 32-12-5367

REV	DATE	DESCRIPTION	BY
E	12/07	CHNG'D HOLE PATTERN 2	DOWNIN
D	Dec/06	DESIGN CHANGE	JDR/JVD
C	07/06	COMPLETE DESIGN CHANGE	JDR
B	02/01	ANTENNA HOLES FROM 13/16 DIA	JDR
A	11/00	CHG'D ITEM 106 FROM 22 LG	JDR

NEXT ASSEMBLY

STATE OF CALIFORNIA
DEPARTMENT OF TRANSPORTATION
DIVISION OF EQUIPMENT

00830 UB LIGHT RACK

SCALE AS NOTED | DATE 07/22/00 | P2-D071-01
DRAWN JDR | DESIGNED CAL S.
CHECKED | APPROVED | SHEET 1 OF 1 SHEETS

CT STK #051-3276 - RACK

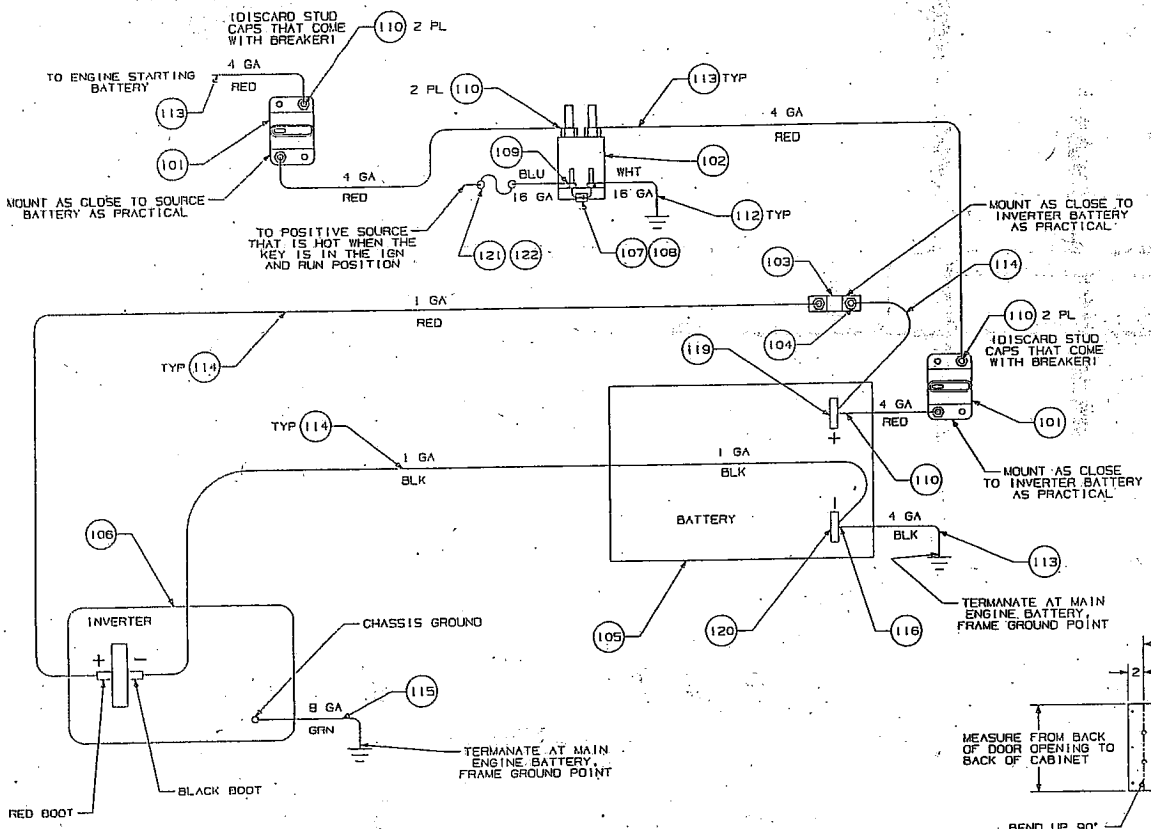

NOTES:

1. ALL WELDS, ELECTRICAL AND PAINT WILL BE IN COMPLIANCE WITH CALTRANS EQUIPMENT QUALITY STANDARDS. GO TO www.dot.ca.gov/hq/eqsc TO VIEW EQUIPMENT QUALITY STANDARDS.
2. ALL WIRE AND CABLE TO BE SECURED AND SUPPORTED EVERY 18" BY INSULATED METAL LOOP CLAMPS..
3. PLASTIC TIE WRAPS SHALL NOT BE USED AS A MEANS OF SUPPORT. THEY MAY BE USED FOR BUNDLING OR RETENTION OF MULTIPLE CONDUCTORS.
4. ALL 1 & 4 GA BATTERY CABLE CONNECTIONS SHALL BE HEAVY DUTY RING STYLE LUGS, SEAMLESS COPPER, TIN PLATED, CRIMP OR SOLDER. (AMP/152Bxxx-2 or MOLEX/19221-01xxx)
5. RING TERMINALS AND BUTT SPLICES FOR 22 TO 10 GAUGE WIRES, SHALL BE SOLDERLESS INSULATED CRIMP TERMINALS DOUBLE CRIMP STYLE, TIN PLATED COPPER, UL LISTED, NYLON INSULATED, RED, BLUE, YELLOW, RATED TO 220° F. (AMP/P103 or MOLEX/AVIKRIMP). ALL EXTERIOR SPLICES SHALL BE SEALED WITH ADHESIVE LINED HEAT SHRINK TUBING.
6. ALL NYLON INSULATED CRIMPS SHALL BE DONE WITH A RATCHING TYPE CRIMP TOOL WITH THE CORRECT DIES FOR THE TERMINALS BEING CRIMPED.
7. HEAVY DUTY RING LUGS SHALL BE CRIMPED WITH A HEAVY DUTY COMPOUND LEVER STYLE, DIE TYPE TOOL OR SOLDERED.
8. ALL NON INSULATED CRIMP/SOLDER TERMINALS WILL BE SEALED WITH ADHESIVE LINED HEAT SHRINK TUBING.
9. EACH BATTERY TERMINAL OR STUD/BOLT SHALL HAVE A BOOT, CAP, COVER OR SHIELD, ALONG WITH ALL POSITIVE TERMINALS.
10. ALL WIRE ROUTING SHALL NOT BE PLACED UNDER TENSION AND SHALL BE FREE AND CLEAR OF ANY MOVING PARTS. NYLON SPLIT LOOM SHALL PROTECT THE HARNESS IN THE OPERATING ENVIROMENT AND PROVIDE PROTECTION FROM ROAD DAMAGE. WHENEVER WIRES ARE RUN THRU HOLES IN METAL PARTITIONS THE HOLES SHALL BE EQUIPPED WITH SUITABLE MECHANICAL PROTECTION GROMMETS.
11. ALL ADDED UNDER HOOD AND UNDER BODY WIRING MUST BE CROSS-LINKED POLYETHYLENE, HIGH TEMPERATURE (MIN 125° C) INSULATED WIRE
12. FOLLOW MANUFACTURES INSTALLATION INSTRUCTIONS.

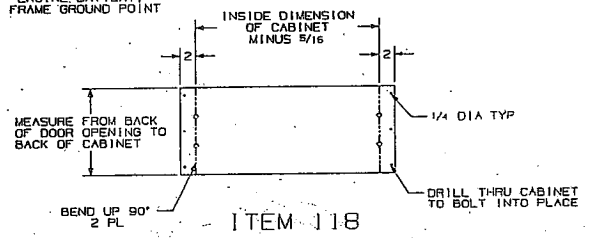

ITEM 118

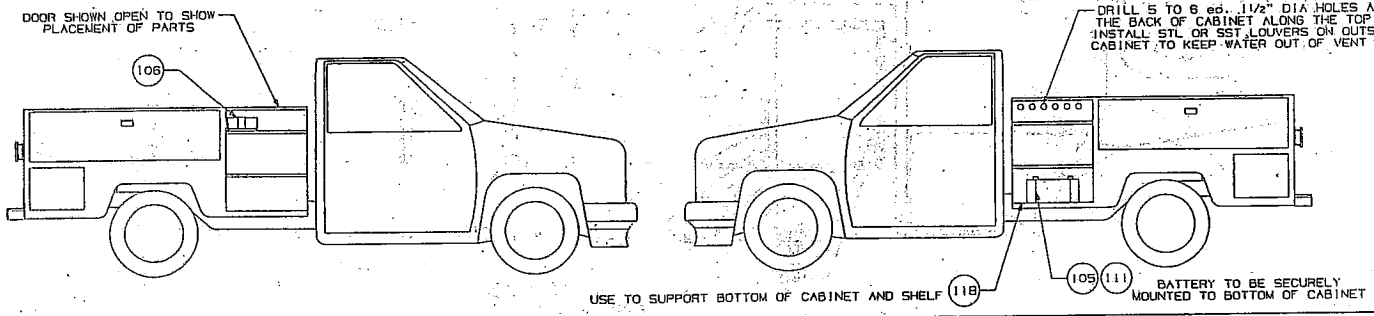

BILL OF MATERIALS

ITEM	QTY	DESCRIPTION	MANUF. & NO.	CALTRANS NO.
101	2	CIRCUIT BREAKER-100A SW/MAN RESET, S MT	BUSS FUSE 185-100-F-01	-
102	1	SOLENOID, CONT DUTY, 100 A, SPST-NO, 12V	COLE HERSEE 24612-10	-
103	1	ANL FUSE, BOLT IN 32V DC, 250 AMP	BUSSMANN ANL 250	-
104	1	ANL FUSE BLOCK SYSTEM 300 AMP	McMASTER 70635K51	-
105	1	BATTERY, 12V, 210 AH AGM, GROUP 1D	CONCORDE AGM-12210L	032-4794
106	1	INVERTER, 1800 WATT GFCI OUTLET-120V	PROSINE 806-1800	030-4799
107	1	DIODE, (RECTIFIER) FAST RECOVERY 3 AMP	RECTRON FR304-B	OR EQUIVALENT
108	2"	HEAT SHRINK TUBE, CLEAR, 1/4 ID	McMASTER 7856K15	OR EQUIVALENT
109	1	TERMINAL INSULATOR 18-10 GA, RED	SUPERIOR EMBLEM INC SMHCO SY29G2-RED	OR EQUIVALENT
110	7	TERMINAL INSULATOR 8-2 GA, RED	SUPERIOR EMBLEM INC SMHCO SY2961-HED	032-4825
111	2	BATTERY HOLD DOWN WITH 10" BOLT	McMASTER 7764K6	OR EQUIVALENT
112	AS REQ	16 GA GXL SAE J128, WIRE, BLUE & WHT	IEWC GXL 16	-
113	AS REQ	4 GA SGX SAE J-1127 BATT CABLE, RED & BLK	IEWC SGX 4	-
114	LESS THAN 10 Ft	1 GA SGX SAE J-1127 BATT CABLE, RED & BLK	IEWC SGX 1	-
115	AS REQ	8 GA THHN WIRE, STRANDED, GREEN	IEWC THHNDBB19	-
116	1	TERMINAL INSULATOR 8-2 GA, BLK	SUPERIOR EMBLEM INC SMHCO SY2961-BLK	OR EQUIVALENT
117				-
118	1	10 GA HR STEEL SHEET ASTM A569	-	-
119	1	STR LEAD BATT TERM, CAP, 1 GA, RED	SUPERIOR EMBLEM INC SMHCO SY2910-RED	OR EQUIVALENT
120	1	STR LEAD BATT TERM, CAP, 1 GA, BLACK	SUPERIOR EMBLEM INC SMHCO SY2910-BLK	OR EQUIVALENT
121	1	FUSE HOLDER, ATC/ATO WEATHER RESISTANT	BUSSMANN HHR	OR EQUIVALENT
122	1	FUSE, ATC/ATO 3A	BUSSMANN ATC-3	030-1586

PE 32-12-5367

REV	DATE	DESCRIPTION	BY
A	06/06	CHANGED ITEM # 104	JDR

NEXT ASSEMBLY

STATE OF CALIFORNIA
DEPARTMENT OF TRANSPORTATION
DIVISION OF EQUIPMENT

1800 WATT INVERTER, GFIC OUTLET
1 BATTERY, TYPICAL UB SCHEMATIC

SCALE	NONE	DATE	29 Sep 04	UI-D022-01
DRAWN	J Payne	DESIGNED	CAL S.	
CHECKED		APPROVED		SHEET 1 OF 1 SHEETS

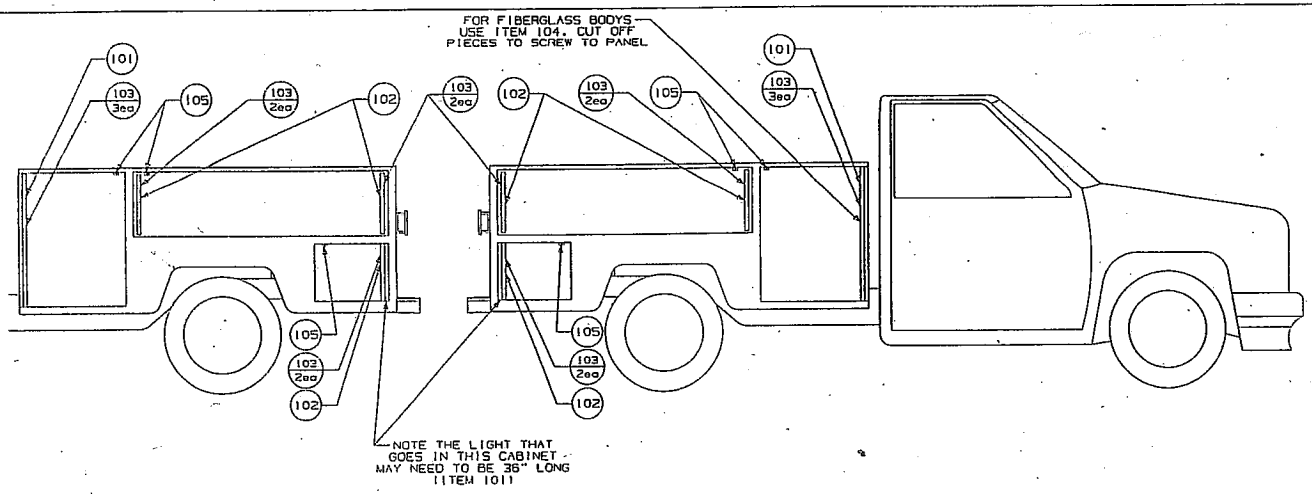

LIGHTS ARE SHOWN IN APPROXIMATE POSITION.
MOUNT ON HINGE SIDE WITH PROVIDED BRACKETS.
CUT MOUNTING BRACKET TO LENGTH.
LIGHTS ARE DIRECTIONAL MAKE SURE THEY ARE POINTING INTO CABINET.

BILL OF MATERIALS

ITEM	QTY	DESCRIPTION	MANUF. & NO.	CALTRANS NO.
101	2 or 4	LIGHT, 3mm WHITE LED 1½ APART, 12V DC	VISTA MANUF LKL-1.5 SP-LOE-36" LONG	
102	6 or 4	LIGHT, 3mm WHITE LED 1½ APART 12V DC	VISTA MANUF LKL-1.5 SP-LOE-18" LONG	
103				
104	AS REQ	ANGLE MOUNTING CLIP 4"LG. CUT AS REQ.	VISTA MANUF LKL CORNER ANGLE MOUNT CLIP W/PSA	
105				

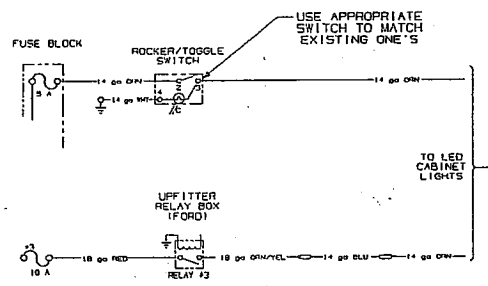

SWITCH OPTIONS

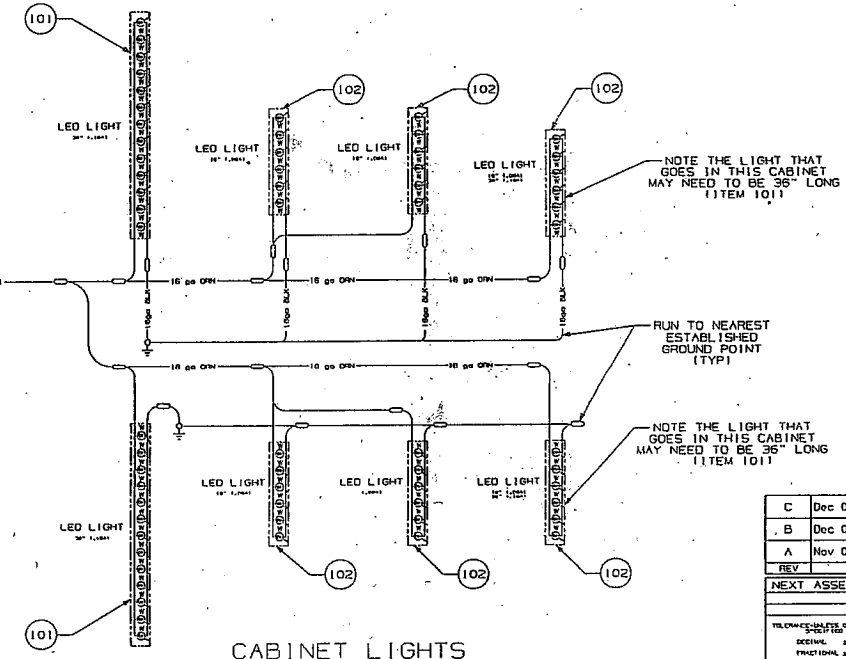

CABINET LIGHTS

PE 32-12-5367

IT IS OK TO MAKE JACKETED CABLE BY USING SINGLE WIRES RAN INSIDE NYLON SPLIT LOOM

SIZE AWG	NUM OF COND	INSULATION COLOR	TYPE	MANUF PART NO (OR EQUIV)
14	1	ORN, BLK	PRIMARY WIRE, TYPE GXL SAE J1128	1EWC GXL 14
16	1	ORN, BLK	PRIMARY WIRE, TYPE GXL SAE J1128	1EWC GXL 14

WIRE REQUIREMENT LIST DC

REV	DESCRIPTION	BY
C	Dec 08 REMOVED DOOR SWITCHES ITEM 105	J Payne
B	Dec 08 UFFITTER RELAY #3 WIRE COLOR WAS 18 GA ORN/BLU	J Payne
A	Nov 08 ADDED NOTE ABOUT 36" LAMP IN LAST CABINET REMOVED ITEM 103, ITEM 104 WAS LKL	J Payne

NEXT ASSEMBLY

STATE OF CALIFORNIA
DEPARTMENT OF TRANSPORTATION
DIVISION OF EQUIPMENT

LED CABINET LIGHTING
TYPICAL UTILITY BODY

SCALE NONE | DATE 18 Oct 08 | UI-D028-01

DRAWN J Payne | DESIGNED | CHECKED | APPROVED | SHEET 1 OF 1 SHEETS