# STATE OF CALIFORNIA
Department of General Services - Office of Procurement
# PURCHASE ORDER

Form GSOP 1-PIN (04/98)

| Purchase Order No. | Rev. | Date |
|---|---|---|
| 62339 | | 5/ 5/2009 |

| Supplier No. | Solicitation No. | Delivery Date | FOB Point | Invoice Terms |
|---|---|---|---|---|
| 59727 | 57226 | 270 Days ARO | FOB | |

HARLEY MURRAY INC.
1754 E MARIPOSA RD
STOCKTON, CA 95205-7790

**Phone:** 209-466-0266

**Ship To**
DEPT OF TRANSPORTATION
SHOP 32
34TH ST. & STOCKTON BLVD
SACRAMENTO, CA 95816

**Charge To**
CALTRANS-ACCTG/OFC B-15
D32 EQUIPMENT SERVICE CTR
ACCY SVS CTR OFAA
PO BOX 168018 MS#33

| Agency Billing | Agency Purchase Estimate | Purchase Estimate | Revision |
|---|---|---|---|
| 60063 | 32-12-5461* | 67322 | 0 |

| Agency Contact | Phone | Date Received |
|---|---|---|
| STANLEY JACOBS | 916-227-9710 | |

| Item No. | Quantity | Unit | Commodity Code | Description | Unit Price | Extension |
|---|---|---|---|---|---|---|
| 1 | 3 | EA | 2330-332-0100-5 | TRAILER TILT-BED<br>Barrier trailer, with compressor and generator, in accordance with State of California Specification #61500-228-094. | 289,600.0000 | 868,800.00 |

| Class No. | ID No. | EBR / Shop |
|---|---|---|
| 61500 | 7006453 | 7006453/32 |
| 61500 | 7006454 | 7006454/32 |
| 61500 | 7006455 | 7006455/32 |

**Note: Refer to page 2 of 12 of Specification 61500-228-094 for Barrier Trailer Delineation Items that will be supplied to the vendor by Caltrans at no cost.

GENERAL PROVISIONS

The General Provisions for Non-IT commodities are hereby incorporated by reference. These General Provisions can be obtained by phoning (916) 375-4400 or by accessing our website at:

www.documents.dgs.ca.gov/pd/modellang/GPnonIT0407.pdf

FOR AGENCY USE ONLY

Prime Contractor: SB

Total Value: 868,800.00

Sales and/or use tax to be extra unless noted above

| Buyer | Phone | BOC Number |
|---|---|---|
| SHANNON KELLER | 916-375-4606 | |

**FOR THE PURPOSE OF THIS AWARD**

Only Free On Board (F.O.B.) Destination will be accepted.

**DELIVERY**

Delivery is to be completed in full within two hundred and seventy (270) days after receipt of order (ARO).

Note: In accordance with paragraph 15 of the General Provisions entitled "Delivery", the contractor shall strictly adhere to the delivery terms and completion schedule as specified in this solicitation. Failure to comply with the delivery requirements, as stated, may be considered a breach of contract and subject the contractor to General Provisions 26, entitled "Rights and Remedies of the State for Default".

**FEDERAL EXCISE TAX EXEMPT CERTIFICATE ATTACHED**

Federal Excise Tax Exemption Certificate attached.

**PURCHASE ORDER CHANGES**

This Purchase Order may be amended, modified, or terminated at any time by mutual agreement of the parties, in writing. Change orders amending, modifying or terminating the Purchase Order, including any modifications of the compensation payable, may be issued only by the State Procurement Officer. All such change orders shall be in writing and issued only upon written concurrence of the supplier. Termination, as that term is used in this section, does not include termination for default of the supplier.

**SALES TAX**

Sales tax was not included in the bid pricing and is not part of this award. Sales tax should be added at time of invoicing. The sales tax rate applied should be based on the rate of the area the product is to be delivered to.

**SCPRS**

This Purchase order has been registered into the State Contract and Procurement Registration System (SCPRS) at (https://www.scprs.dgs.ca.gov/). The registration number is 62339.

**STATE OF CALIFORNIA, DEPARTMENT OF TRANSPORTATION**
**DIVISION OF EQUIPMENT**

| ITEM NO | UNIT | CAB | TRANS | ENG | CAP | C.A. | F.A. | R.A. |
|---|---|---|---|---|---|---|---|---|
| 61500 | U | | | | | | | 20T |

SPECIFICATION NUMBER: 61500-228-094

SPECIFICATION FOR: Barrier Trailer

PURCHASE ESTIMATE NUMBER: 32-12-5461

©2008 California Department of Transportation
All Rights Reserved
US Patent # 7410321 B1

## SCOPE

It is the intent of this specification to describe the minimum requirements for the fabrication of a barrier trailer. The completed unit will be used to provide a protected work area during highway maintenance work. The barrier will be attached to a set of tandem trailer axles at the rear and a gooseneck trailer frame in the front for coupling with a three-axle truck tractor at the forward end utilizing a standard fifth wheel arrangement. The protection system is essentially a semi-trailer with two telescoping beams, one on each side. Each of the beams can be rotated to the other side to stack on the other beam, and provide a double beam barrier on the edge of a live traffic lane. The trailer can be extended to provide a thirty-foot work space between the gooseneck and the attached set of tandem axles, to shield workers from traffic. The completed unit will be capable of being legally towed on California roads, highways and interstate highways with a permit.

The successful bidder shall have been in the business of fabricating gooseneck trailers with a Gross Vehicle Weight rating (GVWR) in excess of 50,000 lbs for a minimum of three years and successfully performed work of similar complexity within the last three years. Vendor's that have been in the business of fabricating highway barrier systems and successfully performed work of similar complexity within the last three years may incorporate the front and rear carriers from a vendor that meets the abovementioned criteria.

The following drawings are provided to illustrate the assembly and operation of their respective components. The barrier trailer will be constructed, completely assembled and in proper working order in accordance with this specification and the following State of California, Department of Transportation, Division of Equipment drawings:

| **Drawing No.:** | **Title:** |
|---|---|
| I-61500-1-TT1 | Barrier Trailer Transport and Trailer |
| I-61500-1-TT2 | Barrier Trailer Carrier |
| I-61500-1-TT3 | Trailer Reinforcement for Attenuator Installation |
| I-61500-2-BA1 | Barrier Trailer Barrier Assembly |
| I-61500-2-BA2 | Barrier Trailer Barrier Assembly |
| I-61500-3-BM1 | Barrier Trailer Beam Assembly |
| I-61500-3-BM2 | Barrier Trailer Beam Construction |
| I-61500-3-BM3 | Moving Barrier Trailer Roller Details |
| I-61500-3-BM4 | Barrier Trailer I-Beam to Box Beam Transition |
| I-61500-3-BM5 | Barrier Trailer Beam End with Pin |
| I-61500-3-BM6 | Barrier Trailer Beam End with Socket |
| I-61500-3-BM7 | Barrier Trailer Beam Stop for Extension |
| I-61500-4-HG1 | Barrier Trailer Actuator Housing Assembly |
| I-61500-4-HG2 | Barrier Trailer Actuator Housing Details |
| I-61500-4-HG3 | Barrier Trailer Actuator Housing Details |
| I-61500-4-HG4 | Barrier Trailer Beam Lock |
| I-61500-4-HG5 | Barrier Trailer Lock Assembly Gussets |
| I-61500-4-HG6 | Barrier Trailer Forward Bearing Plate |
| I-61500-4-HG7 | Barrier Trailer Rear Bearing Plate |
| I-61500-4-HG8 | Barrier Trailer Shaft, Actuator |
| I-61500-5-AR1 | Barrier Trailer Drive Arm |
| I-61500-5-AR2 | Barrier Trailer Idle Arm |
| I-61500-5-AR3 | Barrier Trailer Box Beam Mount Bracket |
| I-61500-5-AR4 | Barrier Trailer I Beam Mount Bracket |
| I-61500-5-AR5 | Barrier Trailer Arm Spacers |
| I-61500-6-AR6 | Barrier Trailer Arm Bushing and Weld – On hub Detail |
| I-61500-6-LK3 | Barrier Trailer Beam Actuated Pin Stop |
| I-61500-7-GB1 | Barrier Trailer Guidebox |
| I-61500-7-GB2 | Barrier Trailer Guidebox Arm Assembly |
| I-61500-8-HS1 | Barrier Trailer Hydraulic Schematic |
| I-61500-9-PN1 | Barrier Trailer Pneumatic Schematic |
| I-61500-10-ES1 | Barrier Trailer Hydraulic Control Electrical Schematic |
| I-61500-10-ES3 | Barrier Trailer, Hardwire Control Electrical Schematic |
| I-61500-10-ES4 | Barrier Trailer, DC Electrical Schematic |
| I-61500-11-DE1 | Barrier Trailer Transport and Trailer |

State supplied items are as shown below. All other items shall be supplied by the vendor.

| | |
|---|---|
| I-61500-11-DE1 | Barrier Trailer Delineation Items 101, 102, 104 & 107 |

The unit shall comply with Caltrans Equipment Quality Standards for Electrical, Welding, and Paint and Coatings as defined at: http://www.dot.ca.gov/hq/eqsc/qualstand.htm.

The equivalency of any referenced item listed on the drawings or in the specification shall be determined by the Division of Equipment specification engineer. The interpretation of this specification or drawings shall be performed by the specification engineer.

Unless otherwise stated in the purchase order, the requirements of the specification and drawings shall have precedence over the completed questionnaire; and the completed questionnaire shall have precedence over standard factory specifications or literature. Any errors or discrepancies found in the Specification after award of bid or Drawing shall be brought to the attention of, and resolved by, the specification engineer. All measurements and loads unless otherwise stated shall be for a standard trailer with the deck parallel to level ground equipped with the specified tires and wheels outlined in this specification.

This technical specification contract shall be managed by the Specification Engineer. Only technical changes authorized by Specification Engineer in writing will be accepted after award of bid. Technical changes made by any other Division of Equipment, Caltrans or State employees will not be accepted.

The trailer and unit assembly shall be supplied and delivered as a complete welded or bolted assembly unless otherwise noted in this specification. All of the functions of the trailer will be tested and approved prior to acceptance, as stated in the "scope" of the specification.

## *TECHNICAL SPECIFICATIONS*

1. BARRIER TRAILER COMPONENTS: The Barrier Trailer shall be fabricated from three sections: the Front Carrier (Gooseneck), the Barrier Section, and the Rear Carrier. These sections are shown on Drawing I-61500-1-TT1. The Front Carrier and the Rear Carrier shall be manufacturer's design attached to the barrier section within the requirements of these specifications and related drawings. The Front and Rear Carriers shall be modified to incorporate the components, i.e. hydraulic connections and attenuator attachment points etc. shown on Drawings 1-61500-1-TT2 and 1-61500-1-TT3. There shall be no (weight reducing) holes in the webs of these components unless specifically shown on the drawings. The proposed design for the Front Carrier and the Rear Carrier shall be approved by the Specification Engineer prior to award.

2. BARRIER SECTION: The barrier will be fabricated as shown on the drawings listed above. The barrier main components are barrier beams (2 each), actuator housings (2 each) and barrier beam arms and mounting brackets (4 each). The manufacturer will be responsible for the design of the attachment from the barrier actuator housings to the front and rear carrier.

3. BARRIER ACTUATION: Each barrier beam (right and left) will be fixed to an actuator, and shall operate independently. During operation, after the barriers are rotated to the desired side, locks will be released and the barriers will telescope when the rear axle

brakes are applied and the truck tractor pulls ahead, providing a work zone approximately 30 feet in length. The barriers will have air controlled locks to lock them in the retracted and extended positions. The mechanical components will be constructed to tolerances and quality that will provide smooth operation of these and related components. The locks will be controlled using a wireless remote. For telescoping the barrier the hydraulic hoses, air lines, hydraulic lines and wiring for the rear tandem axle assembly will have a housing that will contain the excess wiring, air lines and hydraulic lines, as shown on Drawing I-61500-7-GB1.

4. BARRIER HYDRAULICS: A hydraulic schematic demonstrating the functions for the hydraulic components is shown on Drawing I-61500-8-HS1. The hydraulic components include counter balance valves, stack pressure relief valves and stack flow control valves. These components are included to provide smooth safe operation of the barrier beam rotation. The State towing vehicle will provide the hydraulic power for the items shown on the drawing. All hydraulic hoses, fittings, adapters, and couplers will be SAE rated at a minimum of 3000 pounds per square inch working pressure. The hydraulic valves will be 12 volt DC controlled. Hydraulic control valves for the 180-degree actuators will be mounted in the gooseneck. The valves will be in a weatherproof enclosure. All hydraulic valves and related devices will be properly mounted. All hydraulic hoses will be abrasion resistant with ultra violate inhibitors. In critical locations hoses will be protected against abrasion. Substitution of hydraulic component brands, size or function must be approved by the Specification Engineer prior to installation.

5. BARRIER CONTROLS:

   a. Air Controls: A schematic of the air control components are shown on Drawing I-61500-9-PN1. The tractor pneumatic system will be used to supply the required air for the air lock devices. A third glad-hand shall be installed to supply the air control component on the trailer. This third glad-hand will be labeled with a black colored tag or bracket. All air lines and fittings shall be DOT approved. The air valves will be 12 volt DC controlled. The air valves will be mounted in the same enclosure as the hydraulic valves. All air lines will be protected against abrasion and properly secured and supported. Substitution of component brands, size or function must be approved by the Specification Engineer prior to installation.

   b. Hydraulic – Pneumatic Electrical Controls: Electrical components and schematic details are shown on Drawings I-61500-10-ES1, I-61500-10-ES3, and I-61500-10-ES4. The trailer functions will be controlled by a wireless remote control system (Omnex R160 Receiver and T150 Transmitter, including a pendant cable minimum 20 feet in length) shall be provided by the vendor. These are items 101 and 102 as shown on Drawing I-61500-10-ES1. The switch and label layout shall be as shown on Drawing I-61500-10-ES1. Furthermore, the trailer will also have a secondary control system that is hardwired in a panel as shown on Drawing I-61500-10-ES3. The location of the hardwired control panel is shown on Drawing I-61500-1-TT2.

6. BARRIER TRAILER LENGTH: The length of the carrier/barrier centerline of rear axle to

kingpin will not be more than 40 feet, in the transport position. See Drawing I-61500-1-TT1 and TT2 for general lengths, widths and required dimensions. **Various dimensions indicated (alphabetized) on Drawing I-61500-1-TT1 and TT2 shall be indicated on the questionnaire**. The distance from the centerline of the rear axle to the end of the carrier shall not exceed twenty-eight (28) feet.

7. BARRIER TRAILER WIDTH: The overall width of the trailer shall ***not*** exceed 102 inches.

8. BARRIER TRAILER TARE WEIGHT/COUNTER WEIGHT: The tare weight of the trailer will not be more than 50,000 pounds, with no more than 28,000 pounds on the rear axle and no more than 22,000 pounds on the kingpin. The approximate weight of barrier components is 18,500 pounds.

   As shown on Drawing I-61500-1-TT2, a counter weight shall be installed (if required) over the rear tandem axles to bring the rear axle tare weight to approximately 21,000 pounds. This counter weight should be approximately 2 tons. The weight shall have 3 inch by 3 inch with 3/8 inch thickness angle iron welded to the weight. These angle iron segments shall be drilled to allow it to be bolted through the cross members using 5/8 inch diameter bolts. The washer under the cross member shall be tapered, if needed on the cross member flange. A minimum of six bolts shall be used to mount the weight using the above method.

9. BARRIER TRAILER CAPACITY: The Gross Vehicle Weight Rating of the trailer will be a minimum of 54,000 pounds and shall be sufficient to support all equipment installed.

10. REAR CARRIER FRAME: The rear carrier shall be modified (if required) to facilitate mounting and supporting the rear barrier housing as shown on Drawing I-61500-1-TT2 and shall be modified to accommodate mounting the attenuator as shown on Drawing I-61500-1-TT3. All steel used in the suspension frame will be of a high strength steel A514 or comparable.

    NOTE: Detailed drawing(s) indicating the manufacturers' design for attachment of rear carrier to the rear of the barrier housing shall be provided to the Specification Engineer, during the bidding process.

11. GOOSENECK: A fixed, non-detachable gooseneck with an industry standard height of 49 to 51 inches. The kingpin shall be mounted 24 inches from the front of the trailer. The gooseneck will incorporate a frame stop (inverted "V" that will interlock with the rear cross member of the truck tractor when the fifth wheel is moved forward, as shown on Drawing I-61500-1-TT2 for locating dimensions). The frame stop shall be 80 inches back from the kingpin. The stop will be supported structurally. The structural steel used in the gooseneck will be of a high strength steel A514 or comparable (miscellaneous non critical steel components may be A36). The gooseneck will be designed to position the bottom edge of the barrier beam 38 inches below the kingpin mounting plate height. The gooseneck will incorporate a deck to support and mount accessory equipment such as an air compressor and generator.

NOTE: Drawing(s) of the manufacturers' design for attachment of gooseneck to the front barrier housing shall be provided to the Specification Engineer, during the bidding process.

12. LANDING GEAR: Landing gear shall be incorporated in the gooseneck. The landing gear shall be hydraulic controlled/powered. The landing gear shall have a minimum capacity of 31,000 pounds and a minimum of twenty inches of travel (Ref. Power Gear 30079). The landing gear shall be installed to provide a minimum of eight inches of lift above the king pin. The towing tractor will provide hydraulic power for the landing gear. The gooseneck shall have labeled and color-coded hydraulic couplers/bulkhead adapters installed on the front cross member for easy access from the towing tractor, as shown on Drawings I-61500-1-TT2 and I-61500-8-HS1. Each landing gear leg shall incorporate an integral hydraulic counterbalance/holding valve. Switches shall be mounted at each landing gear to activate an indicator light on the front of the gooseneck, as shown on Drawing I-61500-10-ES1. The lights shall indicate when the landing gear is down a minimum of one inch. The directional electric hydraulic control valves for the landing gear are included with the barrier hydraulic control valve assembly (see Drawing I-61500-8-HS1).

13. REAR CARGO DECK: The rear suspension frame shall incorporate and support a cargo deck. The deck shall be modified (if required) to include a 0.125 inch steel tread plate (diamond plate) with smooth steel side rails. The deck shall be structural supported with 4 inch, 5.4 pound channel cross members no more than 18 inches on centers. The deck shall be structurally sound enough to support a uniform load of 10,000 pounds. The deck shall incorporate tie down components for securing a load. The deck shall be a minimum of 100 inches wide and a minimum of 96 inches in length. The deck rear cross member shall be notched to allow for the attenuator mounting and structural support, as shown on Drawing I-61500-1-TT3. All steel used on the deck may be A36. See drawing I-61500-1-TT2 for required dimensions.

14. REAR BUMPER: The rear suspension frame shall incorporate a rear bumper that extends the full width of the rear tires (100 inches minimum). The bumper shall be a minimum of 10 inches in height and no more than 14 inches above ground level and shall serve as under-ride protection. The bumper shall be a formed section of 0.25 inch mild steel plate. An additional upper recessed portion of the bumper shall house the required rubber grommet mounted rear lighting, as shown on Drawing I-61500-1-TT2. The lower face of the bumper shall be reinforced to supply the support required for the attenuator, as shown on Drawing I-61500-1-TT3.

15. AXLES & SUSPENSION: The carrier shall be equipped with tandem axles and an air ride suspension. The suspension shall incorporate automatic leveling valves to maintain level from left to right side. The suspension and rear supporting frame shall provide a barrier height of 12 inches (from the ground to the bottom of the lower barrier) when at normal ride pressure. The suspension shall incorporate heavy duty shock absorbers. Each axles and suspension shall have a minimum GAWR of 20,000 pounds (total 40,000 pounds for tandem axles). Axles shall be equipped with tapered roller

bearings, oil bath lubrication and Stemco type oil seals with transparent cap. The tires shall have adequate clearance for full suspension travel plus 2 inches. Brake drums shall be steel.

16. WHEELS & TIRES: Eight (8) wheels and tires and a spare shall be supplied (eight installed on the carrier). All wheels shall be steel, hub piloted, disc type with a minimum of 2 air valve access holes per wheel. Tires shall be minimum 235/75R17.5, load range H, with a minimum dual load rating of 5,000 pounds per tire, steel-belted radials, with highway tread. Tires and wheels wheel shall have properly combined load rating to meet or exceed the load rating of the axles and a minimum load capacity of the GVWR of the trailer. Wheel dimensions and pressure rating shall be proper for the designated tire. All wheels and tires shall be same manufacturer and model.

17. BRAKES: The entire brake system shall be in compliance with Federal Motor Vehicle Safety Standard No 121 and the California Motor Vehicle Code. Full air brakes shall be supplied on all axles to match the axle load rating. Each wheel set shall have a diaphragm type combination brake chamber, automatic slack adjuster, and "S" cam type brake system. The brake slack adjusters shall be at a 90 degree angle to the spring brake rod. The brake shoe gap shall also be checked for clearance to insure one shoe does not have significantly more clearance than the other shoe when the brakes are released.

    The brake system shall incorporate an anti-compounding feature such that when service brakes are applied the spring brakes shall not activate. Each axle shall have a brake control valve which controls the service, emergency and parking brake functions. The **ABS** braking system shall have a minimum of four (4) sensors and two (2) modules or a single four (4) sensor module. The ABS system shall be powered by the tractor brake light circuit. All wiring for the system shall be completely sealed. All sensors and controls shall be mounted to provide maximum protection, Ref: Bendix. Brake control lines shall terminate at the front of the trailer with glad hands. The emergency air line shall terminate at the left side of the trailer. The emergency air hose shall have a Midland ID tag at the hose bulkhead fitting. The service line shall terminate at the right side of the trailer. The service air hose shall have a Midland ID tag at the hose bulkhead fitting. All connectors shall be Bendix No. 275150 or comparable.

    The unit shall be equipped with a parking brake system that automatically applies when the air hoses are disconnected from the truck. This brake system shall be capable of holding the trailer on a five (5) degree slope, fully loaded to its maximum payload, and detached from its towing vehicle.

    The supplier shall fully demonstrate the mechanical performance of the trailer brake system to insure no interference exists between the brake system and any other trailer component. This demonstration shall take place at the time of inspection of each unit provided.

18. ELECTRICAL EQUIPMENT: Minimum electrical equipment shall comply with all Federal Motor Vehicle Safety Standards (FMVSS) and State of California Department of Motor

Vehicle regulations. Not withstanding any Federal or State minimum requirements, each unit shall be equipped with the lights and wiring as shown on Drawing I-61500-10-ES4. All marker, stop, tail, and turn signal lights shall be light emitting diode (LED) recessed type, mounted in rubber grommets. Mounting holes for lights shall be the proper dimension as recommended by the manufacturer of the light. The holes shall be punched, plasma, or saw cut and finished smooth; torch cut holes are unacceptable.

As shown in on the truck/tractor side, such as items 401 and 402.

Retro-reflective tape reflectors (Ref. Petersen Mfg. #B490R and #B490A, shall be used where needed to meet FMVSS requirements for Class A reflectors.

All wiring installed by the supplier shall be the "UNITIZED" Type (Note: no splicing or cutting is acceptable on wiring looms. If a splice must be made, it hast to be sealed with adhesive lined heat shrink tubing). The wiring shall be secured to minimize sagging or abrasive movement. Scotch Lock wire-type piercing devices shall not be used.

A seven-wire trailer light plug (ref. Truck-Lite Model No. 88896) shall be installed on the trailer and wired according to the Caltrans wiring standards. A wiring schematic, Drawing I-61500-10-ES4, for the plug and wire color code is attached.

The rear of the trailer shall have a 7-wire light plug to connect the lights on the attenuator wired as shown on Drawing I-61500-10-ES4.

All electrical wiring shall be enclosed in automotive type loom and securely anchored to frame work or panels using rubberized loom clamps and sheave protected at all metal edges.

19. ATTENUATOR: The vendor shall supply and install the attenuator shown on Drawing I-61500-1-TT1 per manufacturer's recommendations (Scorpion Model a TMA without hydraulic motor, pump and hydraulic hoses but with hydraulic lift cylinder, available from Traffix Devices Inc., part number 1000-TL2-12-FB-CT). The hydraulics shall be connected as shown on Drawing I-61500-8-HS1. Any modifications to the system must be approved by the Specification Engineer.

20. DELINEATION: The vendor shall install the delineation shown on Drawing I-61500-11-DE1. The State will supply items 101, 102, and 104. The vendor shall supply the other delineation items.

21. TOLERANCES: Tolerances shall be as noted on drawings and specifications and measured after fabrication. All tolerances not indicated shall be ± 0.125 inch unless approved otherwise by specification engineer. Questionable tolerances or missing critical tolerances not indicated on drawings shall be referred to the Specification Engineer.

22. FABRICATION: The barriers and related components shall be fabricated in such a manner (using tooling, fixtures, jigs, etc.) that all critical dimensions are held and components function as intended.

23. HYDRAULICS WORKMANSHIP: All hydraulic lines shall be sized as recommended by the manufacturer of the component to which they attach, and shall be adequate for the use intended. All hoses and plumbing shall have a minimum number of bends and shall be free of any kinks. All bends in hoses and tubing shall be not less than the minimum radius as recommended by the hose or tubing manufacturer. Any hoses routed around or through areas which may cause abrasion and cuts, shall be protected and supported as necessary. All hydraulic components and plumbing shall be mounted and supported to withstand extensive field use. The fittings, tubing or pipe used in the hydraulic system shall not be malleable iron, galvanized steel, black pipe, brass, or plastic pipe & fittings. Only steel or stainless steel crimp type hose fittings and ends which are approved for hydraulic use shall be used (Aeroquip or comparable). No welding of fittings will be allowed. Hydraulic fittings on high-pressure lines shall be the swivel type and shall be 37° JIC unless shown otherwise on the drawings. Fittings shall be of the proper size to match the hydraulic line to which they attach. Compression type fittings shall not be used in the system. All threads shall be North American type threads. British, metric, etc. threads are unacceptable.

    Note: The truck hydraulic system will have a minimum 16 GPM pump with a minimum system pressure of 2,400 PSI.

24. METAL SHAPING: All breaks shall be free of cracks. Radii shall be at least twice the thickness of the material or in accordance with the requirements established by ASTM for the particular material being formed, whichever is greater. All holes shall be round, of the proper dimension, perpendicular to the material they are produced in, and finished smooth. Oblong holes or holes drilled, bored, etc. at angles are not acceptable. Holes and slots shall be drilled, punched, saw cut, plasma cut, or milled; torch cut is unacceptable. Sharp corners on all material shall be radiused to prevent personnel injury.

25. MATERIAL: Construction shall be of all new material free of rust and any defects. All components in the assembly shall be fabricated from a single piece of material. Material which is joined by welding or other means to form a single piece of stock is not acceptable. The finished product shall be free of dents and warpage. The use of any type of body filler is unacceptable. All bolts shall be Grade 5 or better and conform to SAE and ASTM standards. All structural components shall have grade 8 bolts. Bolt lengths shall be such that a minimum of two threads shall extend beyond the nut. Nuts shall be the locking type. Nuts and washers shall be compatible with the bolt(s) to which they are attached, as recommended by the fastener manufacturer and in accordance with SAE and ASTM standards. If requested, the supplier shall submit proof of fastener strengths.

26. WELDING: All welding shall comply with the requirements as represented in American Welding Society (AWS), D14.3-82, and American National Standard entitled

"Specification for Welding Earthmoving and Construction Equipment."

All welds shall be continuous except as noted. Intermittent or spot welds shall be spaced and proportioned to provide ample strength for the material being welded. Weld sizes not indicated shall be equal to the thickness of the least of the joined plates.

All welds shall be properly fused, displaying proper penetration and a professional finish, and must meet the qualification requirements of applicable AWS specifications. Examples of unacceptable weldments are:

| | | | |
|---|---|---|---|
| a. | Cracks | d. | Excessive Splatter |
| b. | Undercut | e. | Blow Holes |
| c. | Overlap | f. | Slag Entrapment |

Any weld failing to comply with the AWS specification or failing to pass a quality assurance inspection performed by the State, will be corrected by the manufacturer, at their expense, and be corrected off State property. The State shall determine if a weld is acceptable or deficient.

A welder who is certified in accordance with the requirements as established by the American Welding Society (AWS) shall correct any deficient weld. The welder shall have the proper certification documents indicating that he/she is qualified to perform the type, size, and position of the weld performed, with the welding process utilized, and on the material being welded. The supplier shall be required to supply proof of current welding certifications for personnel performing any re-welding on the unit, upon request of the State whether written or verbal.

**GRINDING OF WELDS** must have prior approval of the Department of Transportation, Equipment Service Center, Equipment Specifications. Welds which have been ground without approval shall be subject to complete re-welding upon request, at no additional cost to the State.

All assembly dimensions and tolerances on drawings apply after welding. Excessive warpage of assembled parts is not acceptable. Weld symbols on drawings shall be interpreted per American National Standard Welding Symbols. In the event of the lack of a weld symbol, the best commercial practice shall prevail. The covering of welds with body fillers or similar materials is unacceptable.

27. PAINT: The basic unit and the primary finish surfaces of any optional equipment shall be finish painted with lead-free Winter White color. The finish coat shall be free from runs, drips, sags, etc., and shall be evenly applied to provide a gloss finish. The finish coat shall be lead-free DuPont Imron 5000, Winter White (#N6431 HN H), polyurethane enamel, NO EXCEPTIONS. All metal surfaces shall be primer painted in accordance with the paint manufacturer's recommendations, not less than 2 mils dry thickness. The finish coat shall be Winter White color referenced above, not less than 2 mils dry

thickness (total of 4 mils). The finish or top coat shall be compatible for re-coat or touch-up with the above-referenced paint(s). Other minor or incidental component parts may be finished according to the standard factory finish. All paint and primer shall be lead free.

28. LUBRICATION: The equipment purchased shall be certified by the manufacturer for use with re-refined lubrication products. The re-refined lubrication products used by the State shall meet or exceed all SAE, API, and NLGI specifications as required by the manufacturer.

29. Lubrication products used in each unit shall be compatible for top-off and refill with one of the following State contracted lubrication products:

    a. SAE 15W-40 motor oil.
    b. Dexron-III or Mercon automatic transmission fluid.
    c. Tractor hydraulic fluid.
    d. SAE 50 motor oil.
    e. SAE 85W-140 gear lube.
    f. NLGI #2 multipurpose grease.
    g. DOT 3 brake fluid.

    For information regarding State contracted lubrication products contact:

    California Department of Transportation, Equipment Service Center
    P.O. Box 160048, Sacramento, CA 95816
    Attn.: Lubrication Coordinator, Ph: (916) 227-9646

30. RADIO INTERFERENCE: No component shall cause harmful interference with, nor be adversely affected by, Caltrans mobile shortwave radio receivers or transmitters using the 47 MHz, 811 MHz, or 860 MHz radio frequency bands. The supplier shall supply and install any shielding or noise suppression equipment required to prevent or receive harmful interference.

    As required by Part 15 of the FCC rules, a label shall be placed in a conspicuous location on the main control unit that states the following: "This device complies with part 15 of the FCC rules. Operation is subject to the following two conditions: (1) This device may not cause harmful interference, and (2) this device must accept any interference received, including interference that may cause undesired operation."

31. MANUFACTURER'S I.D. PLATE REQUIRED: A plate identifying the manufacturer, tare weight, gross vehicle weight, date of manufacture and all other information as specified in the National Traffic and Motor Vehicle Safety Act, Section 114, and Federal Code of Regulations, Title 49, shall be attached to the front of the trailer frame or body.

32. WORKMANSHIP: The equipment and any accessories shall be a product of good workmanship and shall be free from any defects that will affect their appearance or serviceability.

**33.** SAFETY: The entire unit and accessories shall comply to the applicable provisions of the California Vehicle Code, the Safety Orders of the Division of Industrial Relations, applicable titles of Federal and California Occupational Health and Safety Administration (OSHA), and all Federal regulations in effect at the time of manufacture.

**STATE OF CALIFORNIA, DEPARTMENT OF TRANSPORTATION**
**DIVISION OF EQUIPMENT**

| ITEM NO | UNIT | CAB | TRANS | ENG | CAP | C.A. | F.A. | R.A. |
|---|---|---|---|---|---|---|---|---|
| 61500 | U | | | | | | | 20T |

SPECIFICATION NUMBER: 61500-228-094

SPECIFICATION FOR: Barrier Trailer

PURCHASE ESTIMATE NUMBER: 32-12-5461

## *ADMINISTRATIVE REQUIREMENTS*

1. VEHICLE REGISTRATION DOCUMENTS REQUIRED: The original dealer's "Report of Sale" shall be furnished by all California licensed dealers at the time of delivery of each unit or units covered by these specifications.

   A "Manufacturer's Statement of Origin" and original "Bill of Sale" on the vendor's letterhead may be supplied for each unit in lieu of a dealer's Report of Sale, if the supplier is not a registered California dealer.

   An original weight certificate from a California Weigh Master for registration purposes must be supplied at the time of delivery of each unit.

   A Federal Excise Tax Exempt Certificate will be attached to the purchase order.

   All documentation supplied for registration shall contain the following:

   State of California
   Department of Transportation/Equipment
   34th Street and Stockton Boulevard
   P. O. Box 160048
   Sacramento, CA 95816

   All required documentation shall be sent to the above address by the time of delivery.

   NOTE: The State shall register/license all vehicles with the Department of Motor Vehicles.

2. WARRANTY: The unit and any optional accessory shall be free from defects in workmanship and materials and be covered (parts and labor) under warranty for one (1) year following the date the Department of Transportation (Caltrans) puts the unit into service. Caltrans will notify the supplier by mail of the in-service date.

   A copy of the manufacturer's standard warranty for the unit, any accessory, optional equipment, and components shall be supplied with each unit at delivery, or upon request. The manufacturer will be held responsible for warranty (commencing from the date Caltrans puts the unit into service) for the following circumstances:

   a. The manufacturer's standard warranty exceeds one (1) year. Under this circumstance, the supplier is responsible until one (1) year is reached. The manufacturer will be held responsible for the balance of the manufacturer's standard warranty.

   b. The supplier is no longer an authorized dealer of the equipment supplied. Under this circumstance, the manufacturer will be held responsible for the balance of the manufacturer's standard warranty. The manufacturer shall establish a fully operational warranty service provider with capabilities equal to or exceeding the supplier's (or his designated warranty provider) within 45 days of the supplier's authorized dealer termination.

   If the supplier is not the manufacturer or manufacturer's authorized representative, then a statement agreeing to the warranty conditions stated herein shall be signed by the manufacturer and submitted upon request prior to Purchase Order award.

   An In-Shop Warranty agreement (see attached), signed by the supplier or manufacturer, shall be supplied prior to Purchase Order award.

   Caltrans, at its option, may perform warranty work under the terms of the In-Shop Warranty agreement. If Caltrans opts not to perform the warranty work, the supplier shall pick up the unit within 48-hours of notification, written or verbal. The unit will be at a Caltrans facility. The unit shall be repaired and returned within 10 working days to the Caltrans facility where the unit was originally picked up. Upon prior approval with Caltrans and in compliance with all Caltrans Policies and Procedures, warranty work may be performed at a Caltrans facility.
   Any supplier or manufacturer non-compliant with the warranty provisions set forth herein may be subject by the Procurement Division, Department of General Services, State of California to be removed from any future bidding.

   For questions regarding the warranty or In-Shop Warranty agreement contact:

   California Department of Transportation
   Equipment Service Center
   P.O. Box 160048
   Sacramento, CA 95816
   Attn.: Warranty Coordinator (916) 227-9724

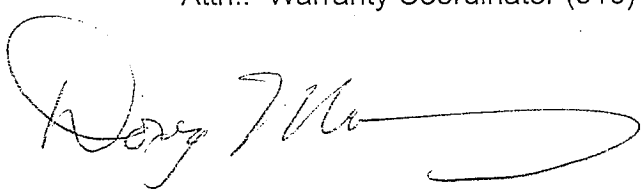

3. PRINTS: Prints are supplied electronically with the bid in .PDF format. Any hard copies required for estimation, fabrication or sub-contractor communication will be the responsibility of the vendor.

   The successful vendor will have 30 calendar days to review the submitted Drawings. If the supplier finds any discrepancies with the prints, the supplier shall notify the Department of Transportation, Equipment Specification's engineer. If the supplier fails to notify the Department of any discrepancies with the prints within this time frame, the supplier may be responsible for all costs involved in correcting the discrepancies on the units bid, as deemed acceptable by the Department.

4. IN-PROCESS REVIEW: The unit(s) may require an in-process review to verify timely progress of the unit(s), and to resolve any technical issues that may arise. If there are any questions regarding the intent of the specifications or drawings, call the "Specification Engineer" as indicated on the Contact Information page provided with the Purchase Order. The necessity for an in-process review will be determined by the State, and will be coordinated by the Specification Engineer. Any in-process review conducted within the State of California will be at State expense and will not constitute acceptance of the unit(s).

5. INSPECTION: This order will require a two (2) phase inspection process. For all inspections the unit(s) will be serviced, washed and ready for, as applicable, inspection or delivery. Inspections will begin within five (5) working days from the date of the inspection request by the supplier. It is the supplier's responsibility to contact the Equipment Parts Coordinator at (916) 227-9636 for inspections.

   FIRST PHASE (PRE-DELIVERY INSPECTION): In accordance with the State Administrative Manual, Section 4112 and the Caltrans inspection program, each unit will be inspected prior to shipment to the destination on the purchase order. This inspection trip(s) shall be State financed at no cost to the supplier.

   Each unit shall be identified with the applicable Purchase Order and Line Item. If corrections are needed as a result of the inspection, the corrections shall be made prior to shipment to the purchase order destination. Authorization to deliver unit(s) must be granted by the Department of Transportation, Division of Equipment, Quality Assurance Section.

   If additional interim inspections are required, such inspection trips shall be at the expense of the supplier at $75.00 per hour (including travel time) and all expenses (meals, lodging, and cost of transportation). Travel expenses will be documented on State of California, Department of Transportation, Travel Expense Claim Form, FA302. These fees may be deducted from the invoice.

   PRE-DELIVERY INSPECTION LOCATION: The inspections shall be conducted by the Department of Transportation, Division of Equipment, Quality Assurance. These

inspections shall take place at an adequate site provided by the vendor within the State of California. The inspection site shall meet all of the following criteria:

a. The site shall not be the Purchase Order delivery destination. The site shall be paved, secure and zoned for commercial use.

b. The site shall include electricity, lights, water, compressed air and a secure paved lot. The facilities shall also include lift equipment adequate to raise the units and support them on safety stands with a minimum of 12 inches of tire clearance. The supplier shall provide conditions which meet the safety standards of CAL-OSHA and Title 8 of the California Code of Regulations.

c. The adequacy of the site shall be determined by the Department of Transportation, Division of Equipment, Quality Assurance Section. Contact the Quality Assurance Chief at (916) 227-9709 for approval.

d. If the facility is deemed unacceptable by the Department of Transportation, Division of Equipment, Quality Assurance Section, the vendor shall be billed for the inspection trip including wages and expenses. This cost shall be deducted from the purchase order payment.

SECOND PHASE (FINAL INSPECTION): Each unit will have a final inspection at its delivery destination shown on the Purchase Order to verify acceptability. The State will have five (5) working days after delivery of a unit to conduct the final inspection of said unit. Units delivered to the final Purchase Order destination will be accepted only when all Purchase Order requirements have been met, any shipping damages have been corrected, and all required documents are received by the Department of Transportation, Division of Equipment, Equipment Receiving. These documents include, as applicable, the invoice, vehicle registration documents, parts book, operator's manuals, service manuals, lubrication instructions and charts, warranty information, certifications, questionnaires, etc. Units which are not accepted by the delivery date on the Purchase Order will be considered delivered late.

If the supplier receives notice that the unit(s) is not acceptable, whether written or oral, the unit(s) shipped to the Purchase Order destination shall be removed within seven (7) calendar days. If the supplier fails to remove said unit(s) from the State's facilities within the specified period, the State may forward said unit(s) to the supplier by common carrier at the supplier's expense and risk.

6. DELIVERY: Inspection, delivery, and final acceptance of all units on the Purchase Order shall be within 270 calendar days after the Purchase Order date. Contact the State of California, Department of Transportation, Division of Equipment, Equipment Parts Coordinator at (916) 227-9636 for delivery.

Failure of any units to comply with the specifications by the final delivery date may place the supplier in default and may be grounds for the State to invoke Paragraph

26 of the General Provisions, Rights and Remedies of the State for Default. The Department of General Services, Procurement Division will be notified at such time.

Acceptance of delivery or placement in operation of any equipment shall not release the manufacturer from liability for faulty design, workmanship, or materials appearing even after final payment has been made.

7. LATE DELIVERY CHARGES: The parties to this agreement acknowledge that the State shall incur actual damages should the supplier fail to perform the work as called out in the contract and specification on the dates set forth herein. The parties, therefore, have agreed to late delivery charges in the amount of $27.00 per unit per work day.

   Workdays are Monday through Friday inclusive, except State holidays observed Monday through Friday inclusive.

   The parties also agree that the amount specified is not unreasonable nor punitive in nature because both parties have carefully considered the amount specified and believe it to be a reasonable estimate, and not excessive at the time the purchase order is entered into.

   It is, therefore, agreed that the supplier will pay the State of California the sum of $15.00 per unit per work day (as stated above) for each work day the work remains uncompleted or unaccepted by the State, provided the total late delivery charges assessed against supplier shall in no event exceed twenty-five percent (25%) of the total value of the entire order, and the supplier agrees to pay said damages as herein provided. In the event such damages are not paid, the supplier agrees that the State may deduct the amount thereof from any monies due or that may become due said supplier.

8. PAYMENT: Process for payment will be initiated on each unit as units are received and deemed acceptable. The discount period will start after acceptance of each unit on the Purchase Order.

9. QUESTIONNAIRE: The attached questionnaire shall be filled out and will become a part of each bid submitted. Any portion of the questionnaire which is not applicable to the equipment shall be shown as N/A (not applicable). Unless otherwise stated in the purchase order, the requirements of the written purchase order specification shall have precedence over the completed questionnaire; and the completed questionnaire shall have precedence over standard factory specifications or literature.

10. GENERAL: One (1) complete set of additional filters (air, oil, water, fuel, hydraulic, etc.) shall be supplied with the first unit delivered. This additional set of filters shall be as recommended by the manufacturer and shall be complete with the appropriate part numbers for identification.

Each unit and any accessory shall be delivered completely assembled and ready to operate.

No exceptions to the specifications will be allowed unless the exceptions are listed on the purchase order or subsequent addenda.

The component parts of the unit shall be new and of proper size and design to safely withstand the maximum stresses imposed.

The manufacturer's torque rating of each driven part shall be equal to or exceed the torque rating of its driving member.

Complete printed specifications, published literature, and photos or illustrations (as available) of unit or units that the bidder proposes to furnish shall be supplied upon request.

All equipment and accessories cataloged as standard, unless superseded by these specifications, are to be furnished and included in purchase price of this unit.

The supplier or the manufacturer of the equipment being supplied shall guarantee that all replacement parts for the equipment shall be available for delivery to the State within five (5) working days after the request is telephoned to the manufacturer, or supplier. This requirement shall be in effect for a period of five (5) years after the date the equipment is put into service by the State of California. Suppliers may be removed from the bid list for failure to meet the parts availability obligation.

Bids will not be considered if supplier's designated f.o.b. delivery destination is other than the delivery address stated in the invitation to bid.

Only new models produced and/or assembled by existing manufacturers of like or similar equipment will be considered. Special options may be included only when recommended by the manufacturer of the unit and approved by the State.

The State reserves the right to amend the contract within the scope of the original bid to cover: unanticipated work or the addition of options priced in the awarded Purchase Order. The bid may be amended for additional labor at the published flat rate where applicable.

The State reserves the right to purchase one (1) additional unit, or up to an additional 25% of the quantity on the Purchase Order, at bid prices, for State Agencies and California Local Government Agencies. Orders for such additional units shall be placed within 180 days of bid award date.

**MAKE** Murray **MODEL** Balsi Beam Trailer Cal-trans Design

1. ESTIMATED TARE WEIGHT:

   Kingpin: 10,600 pounds

   Rear Axle: 23,000 pounds

2. CAPACITY:

   Gross Vehicle Weight Rating: 54,000 pounds

3. REAR AXLES:

   Manufacturer: IMT

   Model: HMT 037-IMT-021944

   Capacity: 25,000 pounds

4. SUSPENSION:

   Suspension Type Ridewell Air-ride

   Suspension weight rating: 25,000 pounds

5. LANDING GEAR:

   Manufacturer: Power Gear

   Model: 300079

   Capacity: 31,000 pounds

6. WHEELS:

   Manufacturer Accuride Size 6.75 X 17.5

   Capacity each wheel 5355, No. of lugs 8

7. TIRES:

Manufacturer Continental Size 235/75R X 17.5

Capacity per tire as duals 5675 lbs. at 125 psi.

8. BRAKES:

Number of Axles with Service Brakes: 2

FMVSS Compliant? Yes [X] No [ ]

Brake System Equipped with ABS? Yes [X] No [ ]

9. ELECTRICAL EQUIPMENT: Tail/stop/turn lamp

Taillights: Make Trucklite Model 44302R

Wiring system used: Phillips

Amber Marker Lights: Make Trucklite Model 10250Y

10. PAINT:

Manufacturer: Dupont Number: N6431

Color: Winter White

Is the Paint Lead Free (below 100 PPM dry weight) ? Yes [X] No [ ]

11. **VARIOUS DIMENSIONS INDICATED (ALPHABETIZED) ON DRAWING I-61500-1-TT1 AND I-61500-1-TT2 SHALL BE INDICATED BELOW.**

Dimension A 44 ft. 2" + 8" in

Dimension B Less than 40' ft. _____ in

Dimension C 8' ft. 8"+4" in

Dimension D 9' ft. 9" + 4" in

12. WARRANTY SERVICE PROVIDER:

Company: Harley Murray, Inc.

Address: 1754 E. Mariposa Rd

Address: Stockton, CA 95205

Phone Number: (209)466-0266

Contact Person: Doug Murray

13. CALIFORNIA PRE-DELIVERY INSPECTION LOCATION:

Company: Harley Murray, Inc.

Address: 1754 E. Mariposa Rd

Address: Stockton, CA 95205

Phone Number: (209)466-0266

Contact Person: Doug Murray

NOTE: THIS QUESTIONNAIRE SHALL BECOME PART OF THIS BID AND TAKE PRECEDENT OVER ACCOMPANYING LITERATURE. THE BIDDER MUST COMPLETE THE FOLLOWING IN FULL.

| | |
|---|---|
| Harley Murray, Inc. | Doug Murray |
| COMPANY | NAME (PRINTED) |
| 1754 E. Mariposa Rd | |
| ADDRESS | SIGNATURE |
| Stockton, CA 95205 | President/CEO |
| CITY, STATE ZIP CODE | TITLE |
| (209)466-0266 | |
| TELEPHONE NUMBER | |

LIST ANY ADDITIONAL INFORMATION OR EXCEPTIONS TO THE SPECIFICATIONS BELOW:

Specification No.: 61500-228-094
PE No.: 32-12-5461

# CALTRANS IN-SHOP WARRANTY AGREEMENT

Name of Supplier/Manufacturer Harley Murray, Inc. dba: Murray Trailers
Warranty Representative (print or type) Doug Murray or Norma Palomino
Street Address 1754 E. Mariposa Rd
City, State, Zip Code Stockton, CA 95205
Telephone Number (209)466-0266
Solicitation No. 57226 Due Date 3/16/2009
Item (Quantity/Brand/Model) Three (3) Murray Balsi Beam Trailers

When equipment is purchased for Caltrans, a section of the specifications requires the supplier/manufacturer to enter into an In-Shop Warranty Agreement.

The terms of the In-Shop Warranty Agreement for this equipment are as follows:

1. Labor rate charged by Caltrans will be $150.00 per hour.

2. Warranty claims will be processed on a Caltrans Work Order unless the supplier/ manufacturer furnishes standard warranty forms.

3. Suppliers'/manufacturers' standard flat rate time schedules shall be used as a guide for In-Shop Warranty repair time. If a supplier's/manufacturer's flat rate time schedule is not available, Caltrans will use the time that is recorded on the Caltrans Work Order.

4. Replacement parts will be available within 5 working days from the date of receipt by supplier/manufacturer of a Purchase Order, whether the order is made by telephone or in writing.

5. Replaced parts will be held 60 days for inspection by the supplier/manufacturer.

6. Original Equipment Manufacturers' parts will be used as replacement parts; or, if OEM parts are not available, after-market parts of equal or better quality will be utilized.

7. Copies of invoices for all parts will be provided to the supplier/manufacturer.

Caltrans will contact the supplier/manufacturer for authorization to perform In-Shop Warranty repairs as stated in this agreement. Only under extreme emergency conditions will In-Shop Warranty be performed without prior authorization. If Caltrans opts not to perform the warranty work, the supplier shall pick up the unit within 48 hours of notification, written or verbal.

In-Shop Warranty Agreement shall remain in effect until all conditions of warranty in the State of California specifications and in the original manufacturer's warranty expire.

Signature, Caltrans Warranty Coordinator _____ Date _____

Signature, Supplier/Manufacturer _____ Date 2/17/2009
Doug Murray

STATE OF CALIFORNIA
California Integrated Waste Management Board
CIWMB 74 (Revised 4/07 for State Agencies)

# Postconsumer-Content Certification

| To be completed by the State agency | |
|---|---|
| State Agency: | |
| Purchasing Agent: | PO #: |
| Phone: | E-mail: |

The State Agency Buy Recycled Campaign (SABRC) is a state mandated program that requires the reporting of all purchases made within 11 specified product categories. All state agencies are required to verify the recycled-content of all products purchased within each of these categories.

All businesses shall certify in writing to the contracting officer or his or her representative the minimum percentage, if not exact percentage, of postconsumer recycled-content (PCRC) material in the products, materials, goods, or supplies offered or sold to the State regardless of whether the product meets the minimum content requirements specified in law (see reverse side). The certification shall be furnished under penalty of perjury. The certification shall be provided regardless of content, even if the product contains no recycled material. A State agency may waive the certification requirement if the percentage of postconsumer material in the products, materials, goods, or supplies can be verified in a written advertisement, including, but not limited to, a product label, a catalog, or a manufacturer or vendor Internet website.

**Contractor/Company Name** Harley Murray, Inc.

**Address** 1754 E. Mariposa Rd Stockton, CA 95205 **Phone** (209)466-0266

| Purchase Order # RFQ # RFP # IFB # Cal Card Order # | Item # | Product or Services Description | [1]Percent Postconsumer Recycled-Content Material | [2]SABRC Product Category Code | Meets SABRC |
|---|---|---|---|---|---|
| IFB #57226 | 1 | Balsi Beam Barrier Trailer (Qty 1) | 21% | 11* | |
| IFB #57226 | 1 | Balsi Beam Barrier Trailer (Qty 1) | 21% | 11* | |
| IFB #57226 | 1 | Balsi Beam Barrier Trailer (Qty 1) | 21% | 11* | |
| | | | | | |
| | | | | | |
| | | | | | |

Public Contract Code sections 12205 (a) (1), (2), (3) and (b) (1), (2), and (3)

Pursuant to Public Contract Code 12205(a)(1), I certify under penalty of perjury under the laws of the State of California that the above information is true and correct.

| Doug Murray | | President/CEO | 2/17/2009 |
|---|---|---|---|
| Print Name | Signature | Title | Date |

*Note: Each Balsi Beam Trailer is made of 70% steel-assumed 30% RECYCLED MATERIAL

**(See footnotes on the back of this page.)**

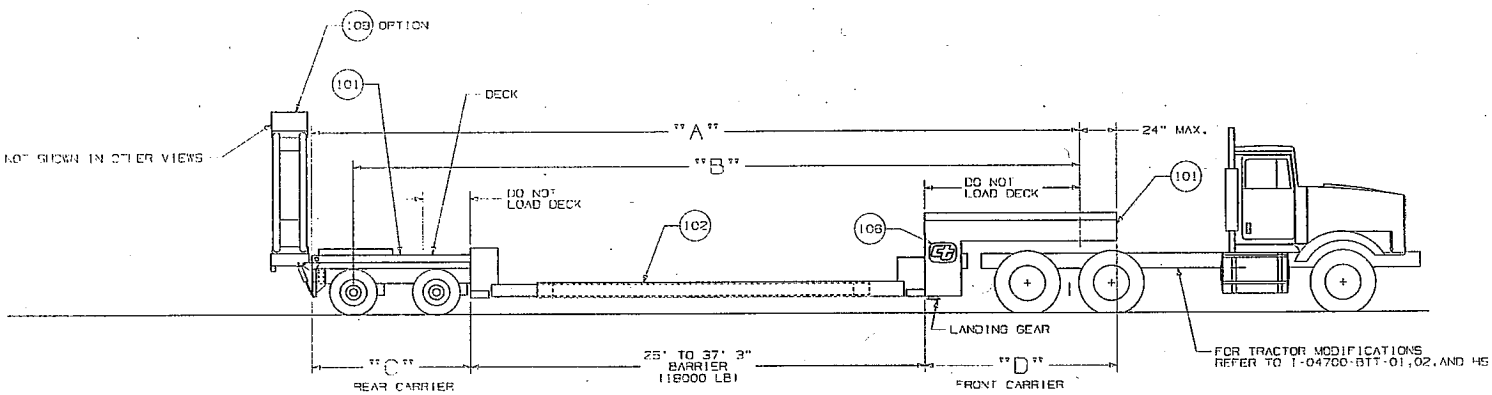


BARRIER TRAILER AND MAINTENANCE TRACTOR
SIDE VIEW

## BILL OF MATERIALS

| ITEM | QTY | DESCRIPTION | DRAWING |
|---|---|---|---|
| 101 | 1 | FRONT/REAR CARRIER | 1-61500-1-TT2 |
| 102 | 1 | BARRIER | 1-61500-2-SA1 |
| 103 | 1 | HYDRAULIC SCHEMATIC | 1-61500-9-HS1 |
| 104 | 1 | PNEUMATIC SCHEMATIC | 1-61500-9-PN1 |
| 105 | 1 | ELECTRICAL SCHEMATIC | 1-61500-10-ES1 |
| 106 | 1 | DELINEATION | 1-61500-11-DE1 |
| | | | |
| 108 | 1 | ATTENUATOR, SCORPION MODEL A TMA, STANDARD UNIT WITHOUT HYDRAULIC MOTOR/PUMP, AND WITHOUT HYDRAULIC HOSE ASSEMBLY. | TRAFFIX DEVICES INC. PART #TL2-12-PB-C1 1-61500-1-TT3 |

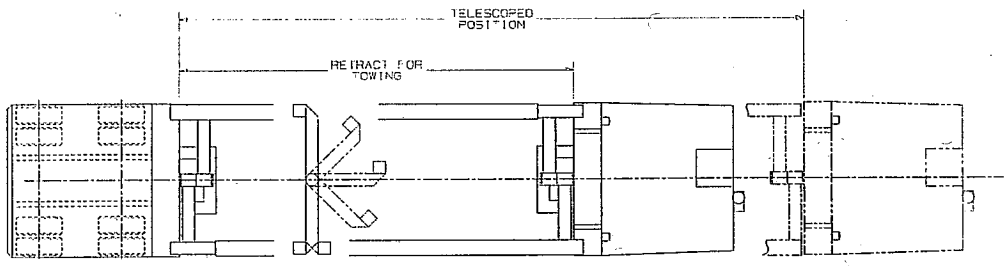


BARRIER TRAILER
BEAM TOWING & TELESCOPING POSITION
TOP VIEW

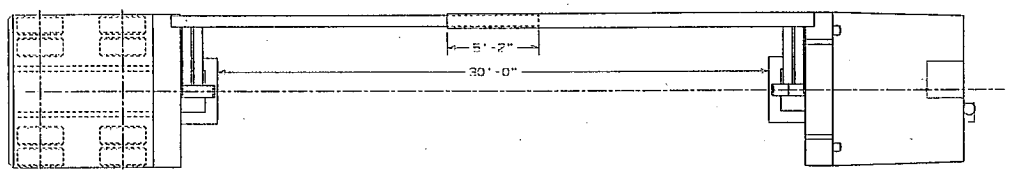


BARRIER TRAILER
BEAM POSITION WHEN DEPLOYED ON RIGHT SHOULDER
TOP VIEW

NOTES:
1. ALL WELDS, ELECTRICAL AND PAINT WILL BE IN COMPLIANCE WITH CALTRANS EQUIPMENT QUALITY STANDARDS. GO TO www.dot.ca.gov/hq/eqac TO VIEW EQUIPMENT QUALITY STANDARDS.
2. LOADS APPLIED TO DECK AREAS LABELED AS "DO NOT LOAD DECK" WILL RESULT IN PREMATURE FAILURE OF BARRIER SYSTEM COMPONENTS

PE 32-12-5461

©2009 Cal Trans a Department of Transportation
All Rights Reserved
US Patent # 7,410,321 B1

| REV | DATE | DESCRIPTION | BY |
|---|---|---|---|
| G | 08/08 | NEW PATENT NUMBER | JJR |
| F | 07/08 | SEE SHEET 1 61500-11-DE1 | WHEELER |
| E | 06/06 | SEE DESCRIPTION ON EACH SHEET | JP |
| D | 06/05 | SEE GROUP 10 AND 8 | JP |
| C | 03/05 | SEE SHEET 1-61500 1-TT3 & ADD'L SHEET 1-61500-9-HS3 & REVOVED SPARE TIRE | JJP |
| B | 06/05 | ADDED ATTENUATOR TO TRAILER | JJP |

NEXT ASSEMBLY

STATE OF CALIFORNIA
DEPARTMENT OF TRANSPORTATION
DIVISION OF EQUIPMENT

BARRIER TRAILER
TRANSPORT AND TRAILER

| SCALE | 1/32 | DATE | 09/01 | 1-61500-1-TT1 |
|---|---|---|---|---|
| DRAWN | WHEELER | DESIGNED | STAFF | |
| CHECKED | | GROUP 1 OF 11 | | SHEET 1 OF 11 |

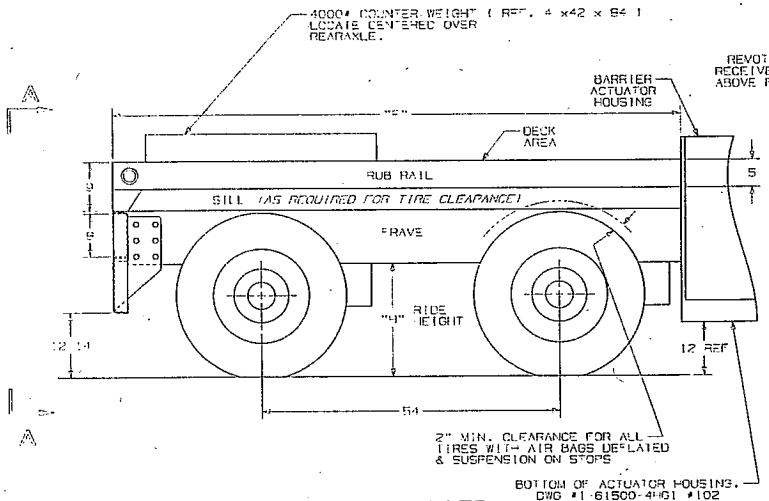


REAR CARRIER

SHOWN WITH AIR BAGS INFLATED TO RIDE HEIGHT

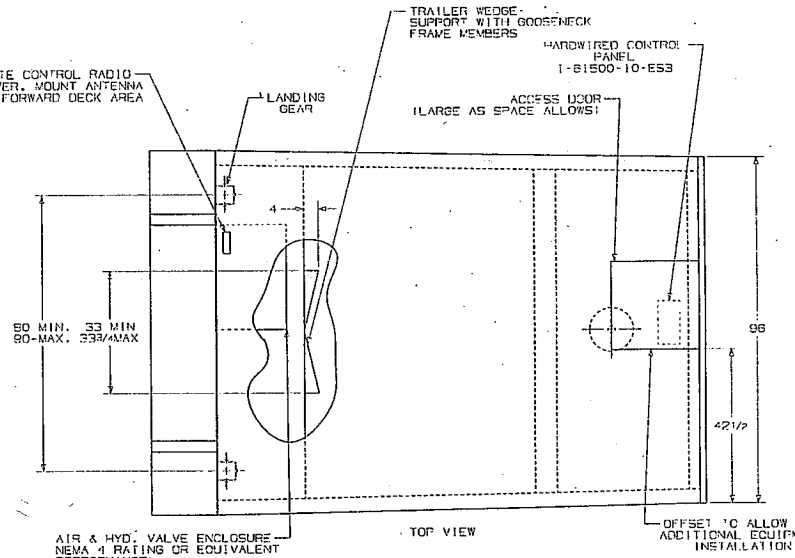


| BILL OF MATERIALS | | |
|---|---|---|
| ITEM | QTY | DESCRIPTION |

NOTES:

1. ALL WELDS, ELECTRICAL AND PAINT WILL BE IN COMPLIANCE WITH CALTRANS EQUIPMENT QUALITY STANDARDS. GO TO www.dot.ca.gov/hq/esc/ TO VIEW EQUIPMENT QUALITY STANDARDS.
2. ALL JOINTS TO BE WELDED CONTINUOUS UNLESS OTHERWISE SPECIFIED. SIZE OF ALL WELDS TO BE AT LEAST THE THICKNESS OF THE THINNER OF THE ADJACENT METALS. WELDS TO BE UNIFORM AND NEAT IN APPEARANCE.
3. THE WORK SHALL BE POSITIONED FOR FLAT WELDING WHENEVER POSSIBLE. USE PROPER PROCEDURES AND SEQUENCE OF WELDING TO AVOID NEEDLESS DISTORTION AND MINIMIZE SHRINKAGE STRESSES OF THE ASSEMBLY.
4. ALL STEEL NOT SPECIFIED SHALL BE ASTM A36 OR BETTER.
5. REMOVE ALL BURRS AND SHARP EDGES.
6. ALL 1/4 AND 5/16 BOLTS, WASHERS AND NUTS TO BE GRADE 8 MINIMUM, ZINC PLATED. ALL BOLTS, WASHERS AND NUTS ABOVE 5/16 SHALL BE GRADE 8, YELLOW CHROMATE PLATED. ALL BOLTS SHALL HAVE TWO THREADS MINIMUM EXTENDING BEYOND THE NUT WHEN PROPERLY TIGHTENED UNLESS OTHERWISE NOTED.

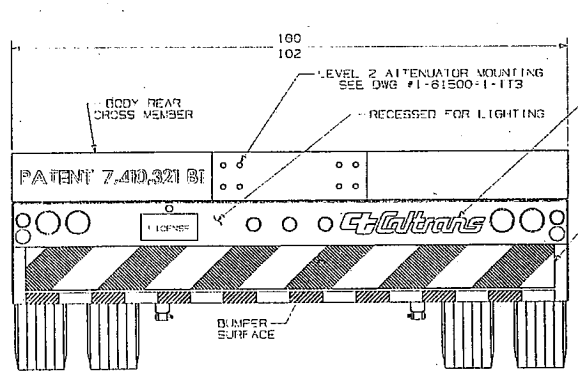


VIEW A-A

REAR VIEW

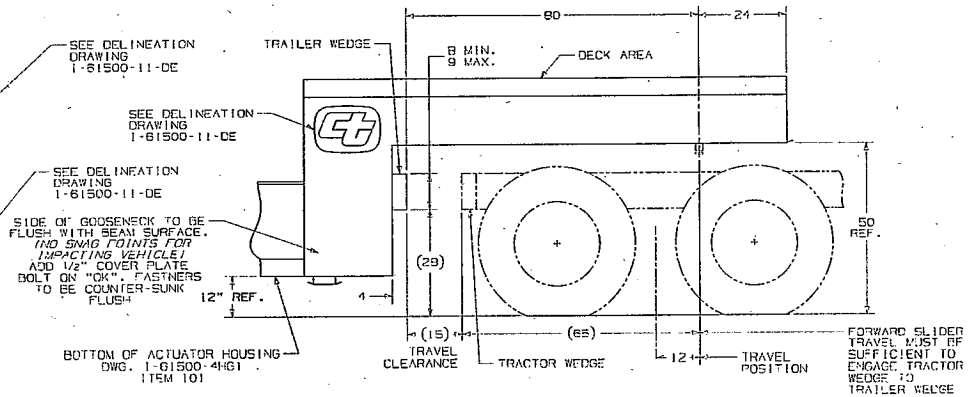


FRONT CARRIER

SIDE VIEW

PE 32-12-5461

©2007 Cal Trans Department of Transportation
All Rights Reserved
US Patent # 7,410,321 B1

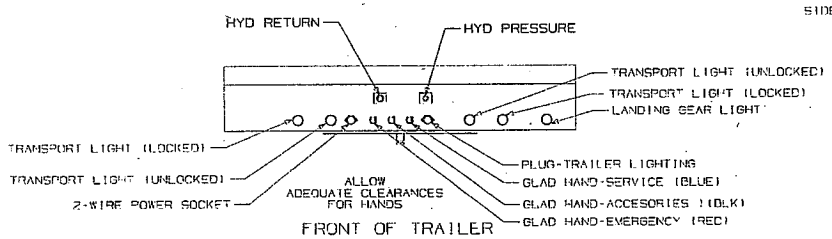


FRONT OF TRAILER

| REV | DESCRIPTION | BY |
|---|---|---|
| 6 | 05/08 NEW PATENT NUMBER | JR |
| 5 | 05/07 ADDED "PUSH TABLET" COMPAT TO GOOSE NOTE. REMOVED HYD 90'S FOR CLEARANCE. | DEWITT |
| 5 | 05/05 ANODIZED ATTENUATOR, HYD GUIDANCE & 1/2 COVER PLATE | J L [illegible] |

NEXT ASSEMBLY

STATE OF CALIFORNIA
DEPARTMENT OF TRANSPORTATION
DIVISION OF EQUIPMENT

BARRIER TRAILER
CARRIER

| SCALE | NONE | DATE | 4/19/02 | 1-61500 1-1T2 |
|---|---|---|---|---|
| DRAWN | DOMAIN | DESIGNED/MODIFIED | | |
| CHECKED | | GROUP 1 OF 11 | | SHEET 2 OF 3 SHEETS |

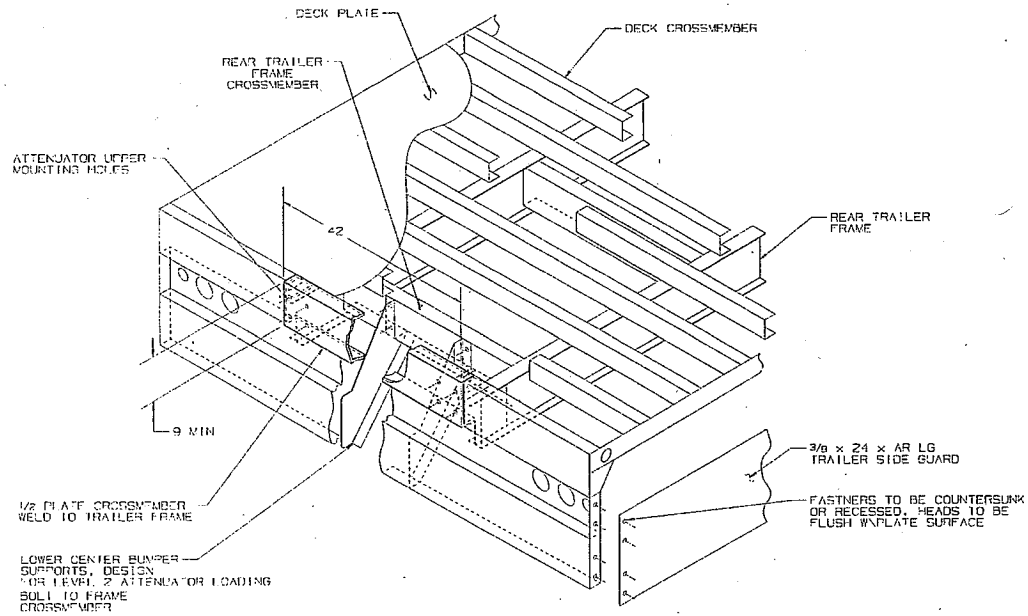


ADDITIONAL HARDWARE OF LEVEL 2 ATTENUATOR

VERIFY DIMENSIONS WITH ATTENUATOR INSTALLATION REQUIREMENTS

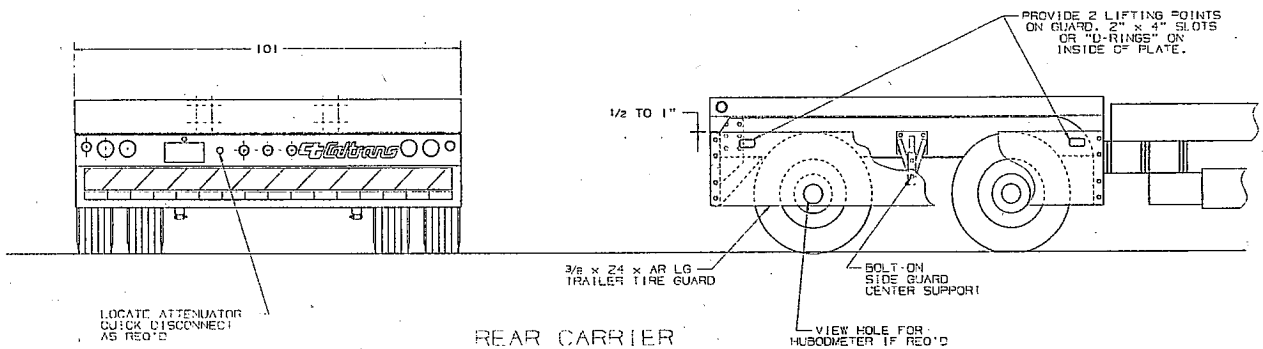


REAR CARRIER

SCALE : 1/16

## BILL OF MATERIALS

| ITEM | QTY | DESCRIPTION |
|---|---|---|

NOTES:

1. ALL WELDS, ELECTRICAL AND PAINT WILL BE IN COMPLIANCE WITH CALTRANS EQUIPMENT QUALITY STANDARDS. GO TO www.dot.ca.gov/hq/esc TO VIEW EQUIPMENT QUALITY STANDARDS.
2. ALL JOINTS TO BE WELDED CONTINUOUS UNLESS OTHERWISE SPECIFIED. SIZE OF ALL WELDS TO BE AT LEAST THE THICKNESS OF THE THINNER OF THE ADJACENT METALS. WELDS TO BE UNIFORM AND NEAT IN APPEARANCE.
3. THE WORK SHALL BE POSITIONED FOR FLAT WELDING WHENEVER POSSIBLE. USE PROPER PROCEDURES AND SEQUENCE OF WELDING TO AVOID NEEDLESS DISTORTION AND MINIMIZE SHRINKAGE STRESSES OF THE ASSEMBLY.
4. ALL STEEL NOT SPECIFIED SHALL BE ASTM A36 OR BETTER.
5. REMOVE ALL BURRS AND SHARP EDGES.
6. ALL 1/4 AND 5/16 BOLTS, WASHERS AND NUTS TO BE GRADE 5 MINIMUM, ZINC PLATED. ALL BOLTS, WASHERS AND NUTS ABOVE 5/16 SHALL BE GRADE 8, YELLOW CHROMATE PLATED. ALL BOLTS SHALL HAVE TWO THREADS MINIMUM EXTENDING BEYOND THE NUT WHEN PROPERLY TIGHTENED UNLESS OTHERWISE NOTED.

PE 32-12-5461

©2008 California Department of Transportation
All Rights Reserved
US Patent # 7,410,[illegible]

| REV | DESCRIPTION | BY |
|---|---|---|
| G | 05/08 NEW PATENT NUMBER | JDR |
| E | 04/08 ADDED LIFTING POINTS TO GUARD | DOWNIN |
| C | 03/08 ATT. X-MEMBER 9 x 42 MINIMUM | JDR |
| B | 09/05 RELOCATE REAR BARRIER TAPE | JDR |

NEXT ASSEMBLY

STATE OF CALIFORNIA
DEPARTMENT OF TRANSPORTATION
DIVISION OF EQUIPMENT

TRAILER REINFORCEMENT FOR ATTENUATOR INSTALLATION

SCALE AS NOTED | DATE 09/15/03 | 1-61500 1-113
DRAWN J.RIME | DESIGNED W.EELER
CHECKED | GROUP 1 OF 11

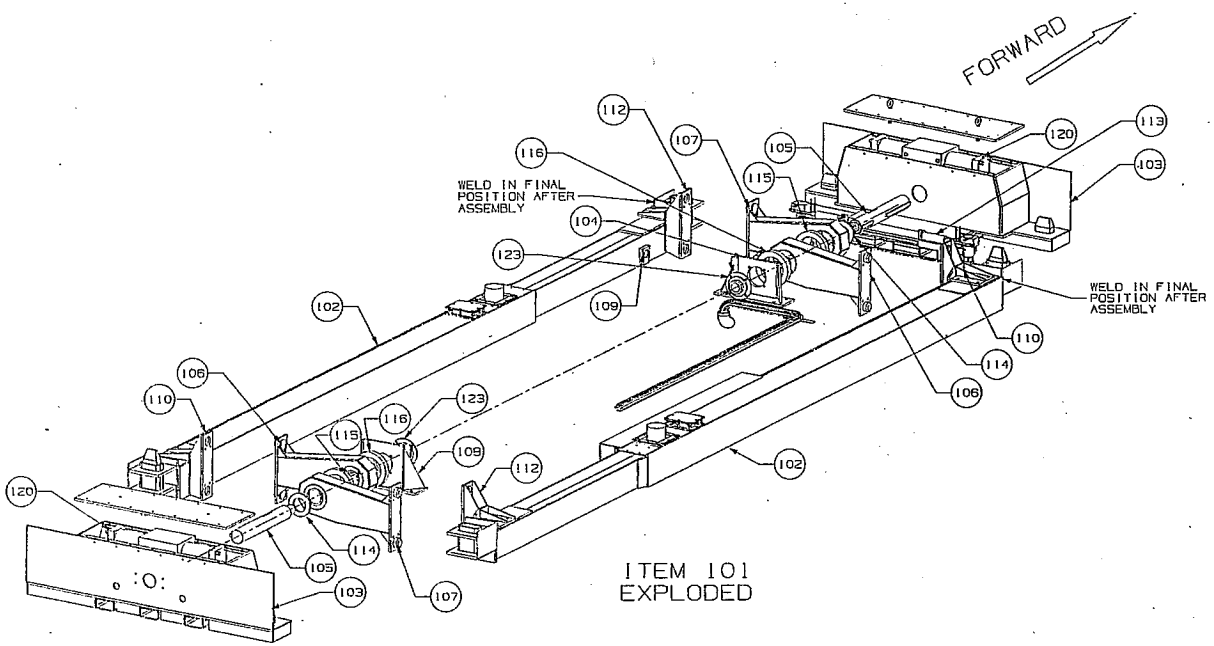


ITEM 101
EXPLODED

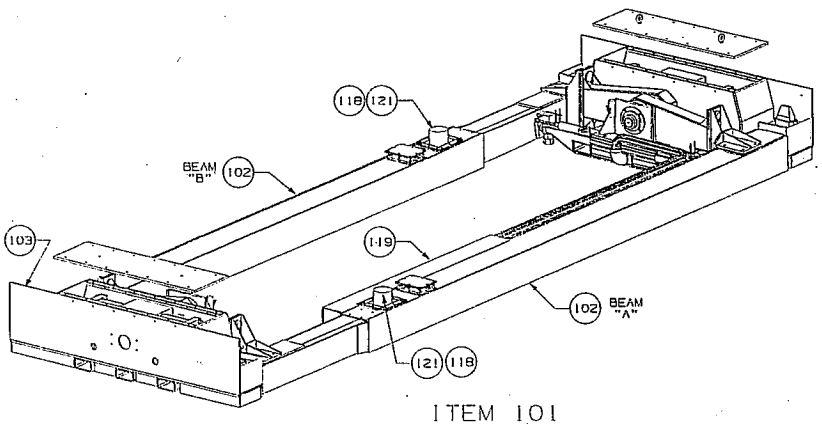


ITEM 101

## DRAWING DIRECTORY

| ITEM | QTY | DESCRIPTION | DRAWING NUMBER |
|---|---|---|---|
| 101 | 1 | BARRIER ASSEMBLY | 1-61500-2-BA1 |
| 102 | 2 | BEAM ASSEMBLY | 1-61500-3-BM1 |
| 103 | 2 | ACTUATOR HOUSING ASSEMBLY | 1-61500-4-HG1 |
| 104 | 1 | BEARING PLATE | 1-61500-4-HG6 ITEM 801 |
| 105 | 2 | SHAFT AND KEYS | 1-61500-4-HG8 |
| 106 | 2 | ACTUATOR DRIVE ARM (KEYWAY) | 1-61500-5-AR1 ITEM 101 |
| 107 | 2 | ACTUATOR IDLER ARM | 1-61500-5-AR2 ITEM 201 |
| 108 | 1 | BEARING PLATE | 1-61500-4-HG7 ITEM 701 |
| 109 | 2 | LOCK PLATE | 1-61500-3-BM3 ITEM 301 |
| 110 | 2 | BOX BEAM MOUNT | 1-61500-5-AR3 ITEM 301 |
| 111 | 2 | LOCK PIN | 1-61500-3-BM3 ITEM 309 |
| 112 | 2 | H BEAM MOUNT | 1-61500-5-AR4 ITEM 431 |
| 113 | 1 | TRANSPORT LOCK | 1-61500-4-HC |
| 114 | 2 | ARM SPACER (3/4 THK) | 1-61500-5-AR |
| 115 | 2 | ARM SPACER (13/4 THK) | 1-61500-5-AR5 ITEM 502 |
| 116 | 2 | ARM SPACER (2 THK) | 1-61500-5-AR5 ITEM 502 |
| 117 | | | |
| 118 | 2 | EXTENSION LOCK ASSY | 1-61500-6-LK3 |
| 119 | 1 | ELEC, HYD, PNEU, GUIDE BOX | 1-61500-7-GB1 |
| 120 | - | HYD. SCHEMATIC | 1-61500-8-HS1 ITEM 101 |
| 121 | - | PNEUMATIC SCHEMATIC | 1-61500-9-PN1 ITEM 101 |
| 122 | - | ELECTRICAL SCHEMATIC | 1-61500-10-ES1,3 |
| 123 | 2 | SPHERICAL ROLLER BEARING, FLANGE CARTRIDGE BROWNING # SFC100ONE x 3 7/16 | |

NOTES:

1. ALL WELDS, ELECTRICAL AND PAINT WILL BE IN COMPLIANCE WITH CALTRANS EQUIPMENT QUALITY STANDARDS. GO TO www.dot.ca.gov/hq/eqsc TO VIEW EQUIPMENT QUALITY STANDARDS.
2. ALL JOINTS TO BE WELDED CONTINUOUS UNLESS OTHERWISE SPECIFIED. SIZE OF ALL WELDS TO BE AT LEAST THE THICKNESS OF THE THINNER OF THE ADJACENT METALS. WELDS TO BE UNIFORM AND NEAT IN APPEARANCE.
3. THE WORK SHALL BE POSITIONED FOR FLAT WELDING WHENEVER POSSIBLE. USE PROPER PROCEDURES AND SEQUENCE OF WELDING TO AVOID NEEDLESS DISTORTION AND MINIMIZE SHRINKAGE STRESSES OF THE ASSEMBLY.
4. ALL STEEL NOT SPECIFIED SHALL BE ASTM A36 OR BETTER.
5. REMOVE ALL BURRS AND SHARP EDGES.
6. ALL MOUNTING AND ROUTING HARDWARE TO BE OF SUITABLE SIZE AND RATING FOR TRUCKS.
7. ALL 1/4 AND 5/16 BOLTS, WASHERS AND NUTS TO BE GRADE 5 MINIMUM, ZINC PLATED. ALL BOLTS, WASHERS AND NUTS ABOVE 5/16 SHALL BE GRADE 8, YELLOW CHROMATE PLATED. ALL BOLTS SHALL HAVE TWO THREADS MINIMUM EXTENDING BEYOND THE NUT WHEN PROPERLY TIGHTENED UNLESS OTHERWISE NOTED.

PE 32-12-5461

©2008 California Department of Transportation
All Rights Reserved
US Patent # 7,410,321 B1

| REV | DATE | DESCRIPTION | BY |
|---|---|---|---|
| G | 08/08 | NEW PATENT NUMBER | JDR |
| E | 06/08 | REMOVED #117 GC AC BOX.PRT FROM ASSM ONLY. RENAMED TO 1-61500-2-BA1_2E. ADDED #113. | JOHNSON |
| B | 11/05 | ADDED ITEM 117 | RAMOS |

NEXT ASSEMBLY
x

TOLERANCE UNLESS OTHERWISE SPECIFIED
DECIMAL ± .005
FRACTIONAL ± 1/32
ANGULAR ± 1°
DRILLED HOLES ± .01
REAMED HOLES ± .

STATE OF CALIFORNIA
DEPARTMENT OF TRANSPORTATION
DIVISION OF EQUIPMENT

BARRIER TRAILER
BARRIER ASSEMBLY

| | | | |
|---|---|---|---|
| SCALE x | DATE 30 Apr 02 | 1-61500 2 BA1 |
| DRAWN J Payne | DESIGNED Schlefferly | |
| CHECKED | GROUP 2 OF 11 | SHEET 1 OF 2 SHEETS |

## BILL OF MATERIALS

| ITEM | QTY | DESCRIPTION |
|---|---|---|

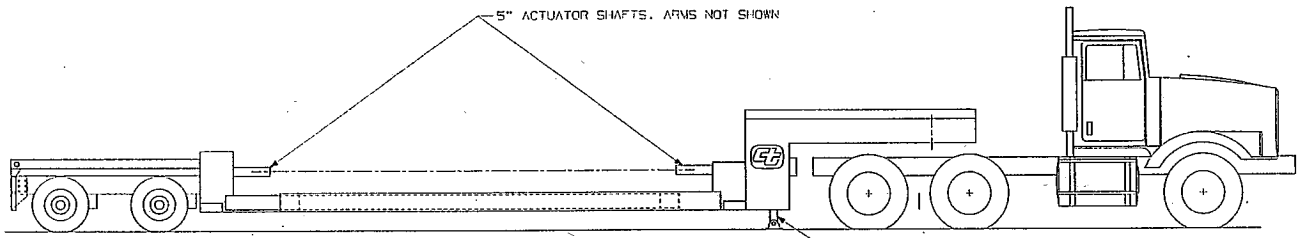


DO NOT ROTATE BEAMS UNLESS SHAFTS ARE ALIGNED
SEE DEPLOYMENT INSTRUCTIONS

### LOCK SHIM SETUP PROCEDURE

1. PARK TRUCK & TRAILER ON LEVEL GROUND.
2. DUMP AIR IN TRACTOR BAGS.
3. ADJUST LANDING GEAR HEIGHT TO ALIGN 5" ACTUATOR SHAFTS.
4. USE LASER OR SIMILAR METHOD TO VERIFY ALIGNMENT OF SHAFTS.
5. "LOCK SHIM" THICKNESS SHALL ALLOW LOCKS TO OPEN AT THIS LANDING GEAR HEIGHT, 1/16" CLEARANCE MAX.) IF LANDING GEAR IS SET ANY LOWER, LOCKS SHALL REMAIN ENGAGED. LOCKSHIM THICKNESS WILL EQUAL VERTICAL DISTANCE FROM SURFACE A TO SURFACE B.

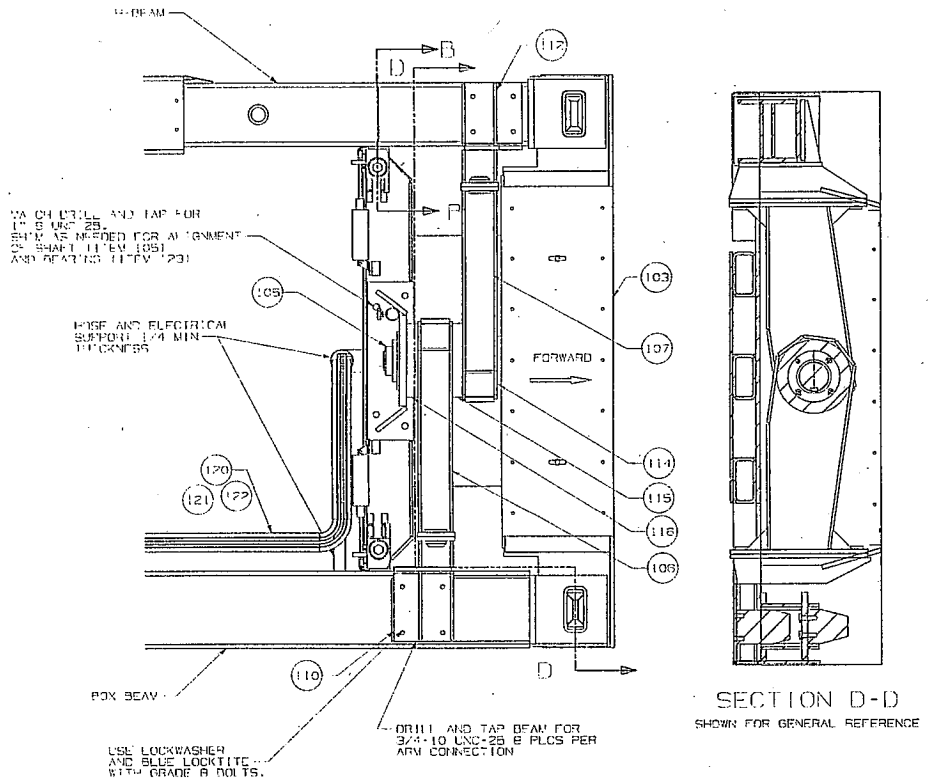


TOP VIEW



SECTION D-D
SHOWN FOR GENERAL REFERENCE

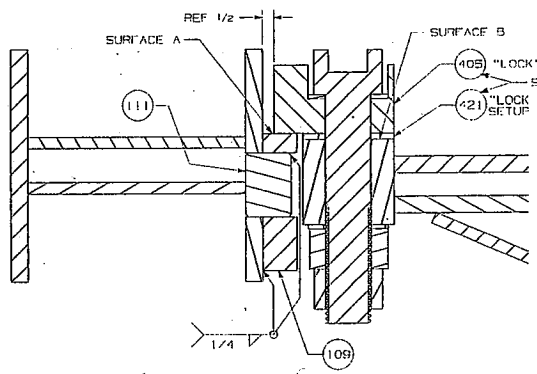


SECTION B-B

PE 32-12-5461

©2000 California Department of Transportation
All Rights Reserved
US Patent # 7,416,221 B1

| REV | DESCRIPTION | BY | JOB |
|---|---|---|---|
| G | 08/08 NEW PATENT NUMBER | | |
| E | 6/08 NEW SHEET | | |

NEXT ASSEMBLY

STATE OF CALIFORNIA
DEPARTMENT OF TRANSPORTATION
DIVISION OF EQUIPMENT

BARRIER TRAILER
BARRIER ASSEMBLY

| | | | |
|---|---|---|---|
| SCALE | DATE 08/22/07 | 1-615000-2-DA2 | |
| DRAWN RAMOS | BUSHED STAFF | | |
| CHECKED | GROUP 2 OF 11 | SHEET 2 OF 2 SHEETS | |

## BILL OF MATERIALS

| ITEM | QTY | DESCRIPTION |
|---|---|---|
| 101 | 1 | CONSISTS OF ITEMS 201,215,301,401,501,601,701, I-61500-6-LK3 ITEM 301 |
| | | |
| 110 | 16 | 1/2-20 UNF X 1 1/2 LG GD 5 BOLT W/SPLIT LOCKWASHER |

(2 TOTAL)

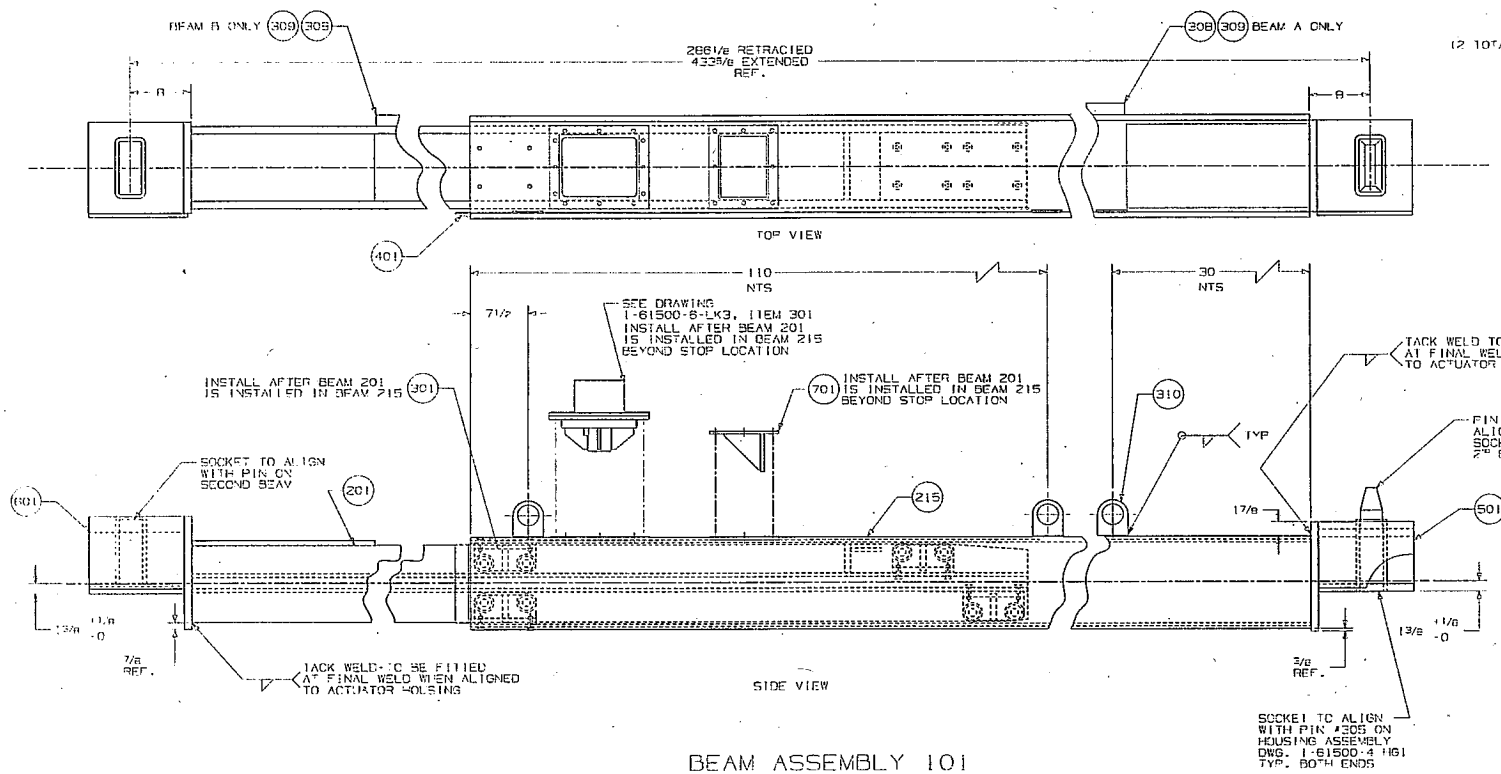


BEAM ASSEMBLY 101

NOTES:

1. ALL WELDS, ELECTRICAL AND PAINT WILL BE IN COMPLIANCE WITH CALTRANS EQUIPMENT QUALITY STANDARDS. GO TO www.dot.ca.gov/hq/esc TO VIEW EQUIPMENT QUALITY STANDARDS.
2. ALL JOINTS TO BE WELDED CONTINUOUS UNLESS OTHERWISE SPECIFIED. SIZE OF ALL WELDS TO BE AT LEAST THE THICKNESS OF THE THINNER OF THE ADJACENT METALS. WELDS TO BE UNIFORM AND NEAT IN APPEARANCE.
3. THE WORK SHALL BE POSITIONED FOR FLAT WELDING WHENEVER POSSIBLE. USE PROPER PROCEDURES AND SEQUENCE OF WELDING TO AVOID NEEDLESS DISTORTION AND MINIMIZE SHRINKAGE STRESSES OF THE ASSEMBLY.
4. ALL STEEL NOT SPECIFIED SHALL BE ASTM A36 OR BETTER.
5. REMOVE ALL BURRS AND SHARP EDGES.
6. ALL 1/4 AND 5/16 BOLTS, WASHERS AND NUTS TO BE GRADE 5 MINIMUM, ZINC PLATED. ALL BOLTS, WASHERS AND NUTS ABOVE 5/16 SHALL BE GRADE 8, YELLOW CHROMATE PLATED. ALL BOLTS SHALL HAVE TWO THREADS MINIMUM EXTENDING BEYOND THE NUT WHEN PROPERLY TIGHTENED UNLESS OTHERWISE NOTED.

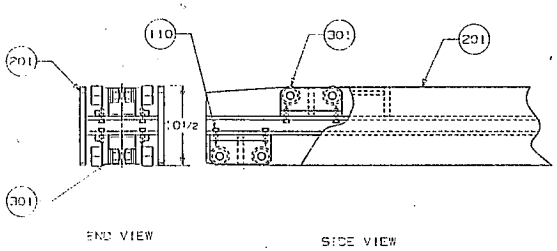


INSTALLATION
OF 301 ON 201

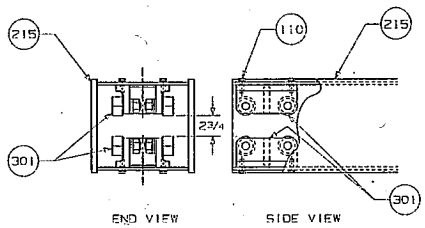


INSTALLATION
OF 301 ON 215

PE 32-12-5461

©2000 California Department of Transportation
All Rights Reserved
US Patent # 7,410,321 B1

| REV | DESCRIPTION | BY |
|---|---|---|
| G | 08/08 NEW PATENT NUMBER | JDR |
| E | 06/08 ADDED 309, 309, 310 TO TOP VIEW | JOHNSON |
| B | 09/05 ADDED ITEM 301, I 61500 6 LK3 | RAMOS |

NEXT ASSEMBLY

STATE OF CALIFORNIA
DEPARTMENT OF TRANSPORTATION
DIVISION OF EQUIPMENT

BARRIER TRAILER
BEAM ASSEMBLY

SCALE AS NOTED | DATE 5/8/02 | I 61500-3 BM1
DRAWN DOWNIN | DESIGNED SHEELER
CHECKED | GROUP 3 OF 11

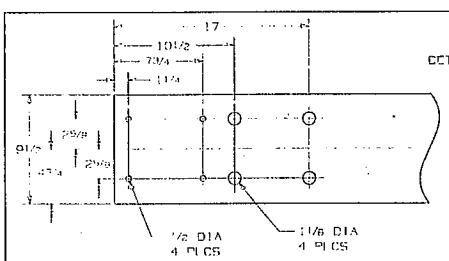


ITEM 203

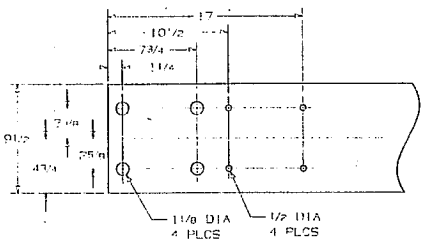


ITEM 204

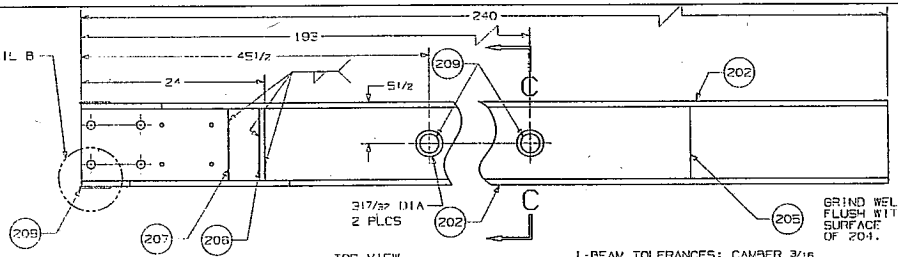


TOP VIEW

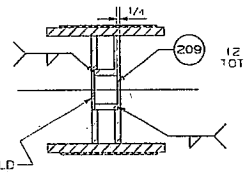


SECTION C-C

I-BEAM TOLERANCES: CAMBER 3/16
SWEEP 3/16
FLANGES OUT-OF-SQUARE 1/8
FLANGE WIDTH +0, -1/4
DEPTH 1/8

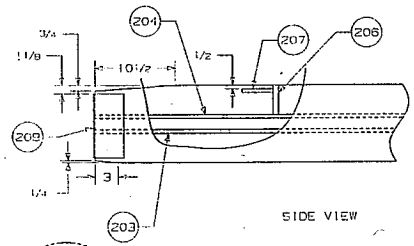


SIDE VIEW

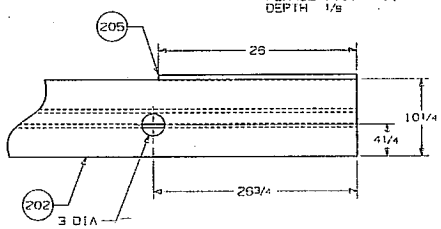


FORWARD BEAM ONLY

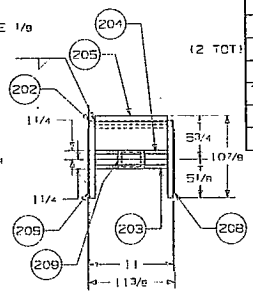


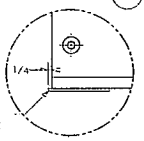


DETAIL B

ASSEMBLY 201
H-BEAM

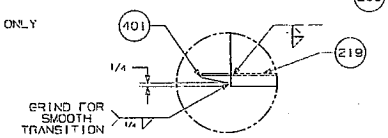


DETAIL A

| BILL OF MATERIALS | | |
|---|---|---|
| ITEM | QTY | DESCRIPTION |
| 201 | 1 | I BEAM ASSM C/O ITEMS 202 209 |
| 202 | 2 | 3/4 X 10 1/4 x 240 LG A514 PLATE |
| 203 | 1 | 1/2 X 9 1/2 x 240 LG A514 PLATE |
| 204 | 1 | 1/2 X 9 1/2 x 240 LG A514 PLATE |
| 205 | 1 | 3/4 X 9 1/2 x 26 LG PLATE |
| 206 | 1 | 3/4 x 37/8 x 9 1/2 HRS PLATE |
| 207 | 2 | 1/2 x 4 x 9 1/2 HRS PLATE |
| 208 | 2 | 3/16 x 4 x 8 1/2 HRS PLATE |
| 209 | 2 | 3.5 x 1/2 x 2 LG RND MECH TUBING ASTM A513 TYPE 5 |
| 215 | 1 | BOX TUBE ASSEMBLY C/O 216-219,401 & 702 |
| 216 | 2 | 3/4 x 12 1/4 x 240 LG A514 PLATE |
| 217 | 2 | 3/8 x 12 x 240 LG A514 PLATE |
| 218 | 1 | 1/2 x 11 x 26 LG HRS PLATE |
| 219 | 4 | 1/8 x 1 x 3 HRS STRIP |

NOTES:
1. ALL WELDS, ELECTRICAL AND PAINT WILL BE IN COMPLIANCE WITH CALTRANS EQUIPMENT QUALITY STANDARDS. GO TO www.dot.ca.gov/hq/esc/oe/... TO VIEW EQUIPMENT QUALITY STANDARDS.
2. ALL JOINTS TO BE WELDED CONTINUOUS UNLESS OTHERWISE SPECIFIED. SIZE OF ALL WELDS TO BE AT LEAST THE THICKNESS OF THE THINNER OF THE ADJACENT METALS. WELDS TO BE UNIFORM AND NEAT IN APPEARANCE.
3. THE WORK SHALL BE POSITIONED FOR FLAT WELDING WHENEVER POSSIBLE. USE PROPER PROCEDURES AND SEQUENCE OF WELDING TO AVOID NEEDLESS DISTORTION AND MINIMIZE SHRINKAGE STRESSES OF THE ASSEMBLY.
4. ALL STEEL NOT SPECIFIED SHALL BE ASTM A36 OR BETTER.
5. REMOVE ALL BURRS AND SHARP EDGES.
6. RECTANGULAR RELIEF NOTCH FOR BEAM LOCK ON INSIDE OF LEFT HAND BOX BEAM ONLY

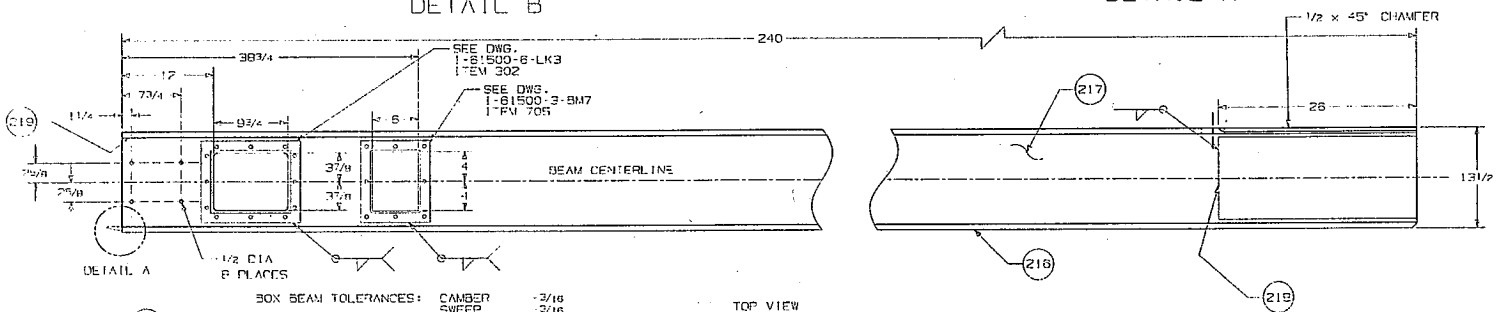


BOX BEAM TOLERANCES: CAMBER -3/16
SWEEP 3/16
SQUARENESS 1"

TOP VIEW

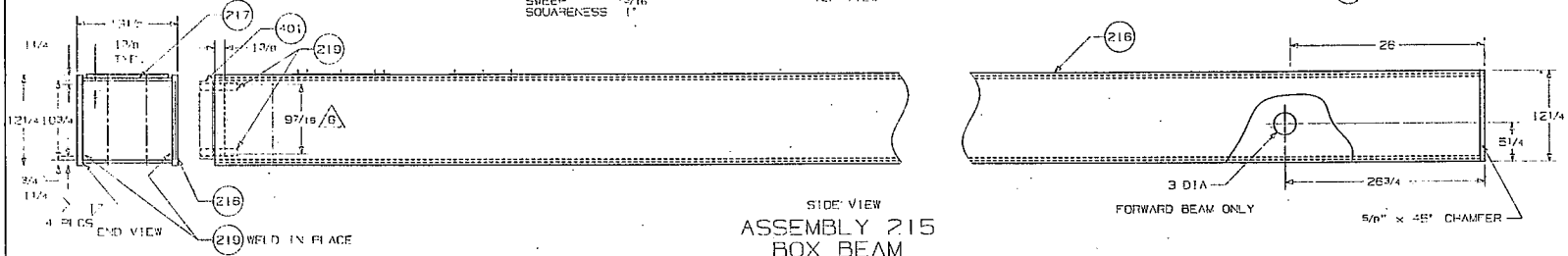


SIDE VIEW

ASSEMBLY 215
BOX BEAM

PE 32-12-5461

©2008 California Department of Transportation
All Rights Reserved
US Patent # 7,410,321 B1

| REV | DESCRIPTION | BY |
|---|---|---|
| G | 09/08 NEW PATENT NUMBER | JDR |
| E | 08/08 DIMENSION ON 208 WAS 195/32" NOW 193". | JOHNSON |
| C | 08/07 ITEM 209 WAS 19 1/2 ON ITEMS 203 & 204 ADDED NOTE 6 AND DIMENSIONS FOR RELIEF | RAMOS |
| B | 07/05 ADDED ITEM 302, 209 | RAMOS |

NEXT ASSEMBLY

STATE OF CALIFORNIA
DEPARTMENT OF TRANSPORTATION
DIVISION OF EQUIPMENT

BARRIER TRAILER
BEAM CONSTRUCTION

| | | | |
|---|---|---|---|
| SCALE | 1/8 | DATE | 01/02 |
| DRAWN | WHEELER | DESIGNED | STAFF |
| CHECKED | | GROUP 3 OF 11 | |

1 61500 3 BM2

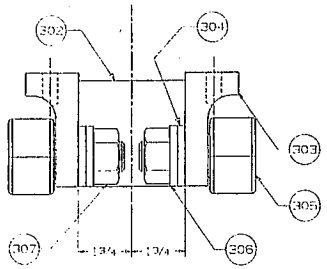


FRONT VIEW

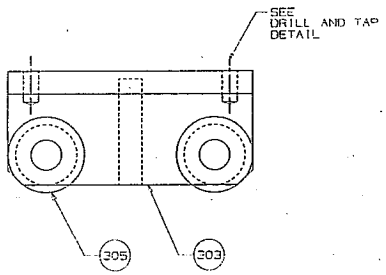


SIDE VIEW

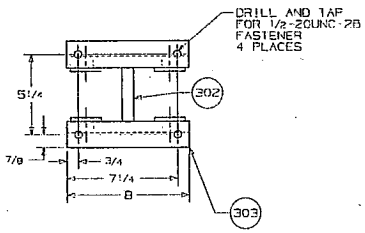


DRILL AND TAP DETAIL

ASSEMBLY OF 302 AND 303

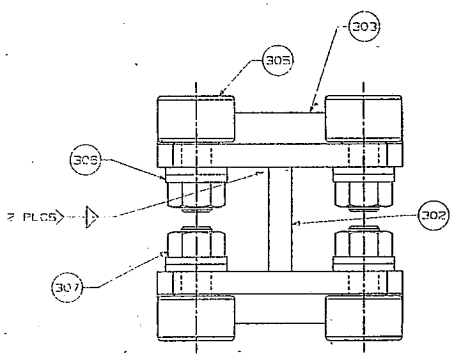


BOTTOM VIEW

ASSEMBLY 301

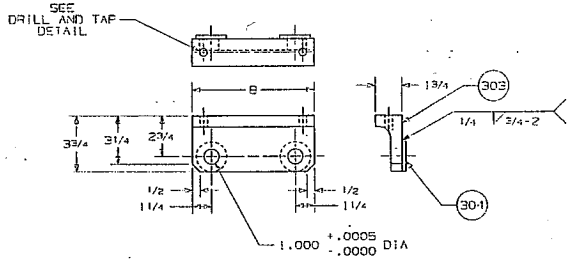


ITEM 303 WITH 304

## BILL OF MATERIALS

| | ITEM | QTY | DESCRIPTION |
|---|---|---|---|
| (8 TOTAL) | 301 | 4 | ASSEMBLY C/O 302 307 |
| | 302 | 1 | 3/4 x 3 1/2 x 3 1/2 LG HRS FLATBAR |
| | 303 | 2 | 5 (min) x 3 1/2 (min) x 3/4 x 8 LG SID STL ANGLE |
| | 304 | 4 | 2 x 1/4 LG CR STL RND STK |
| | 305 | 4 | 2 1/2 DIA. TRACK ROLLER TORRINGTON #CRSB 40 |
| | 306 | 4 | 1" SPLIT LOCK WASHER |
| | 307 | 4 | 1-14UNF GRD 5 HEX NUT |
| | 308 | 2 | 1 1/2 x 5 x 7 LG HRS FLATBAR |
| | 309 | 2 | 3 x 2 1/4 LG CR STL RND STK |
| | 310 | 6 | 12 GA X 4 X 4 3/4 LG STL STEEL |

NOTES:

1. ALL WELDS, ELECTRICAL AND PAINT WILL BE IN COMPLIANCE WITH CALTRANS EQUIPMENT QUALITY STANDARDS. GO TO www.dot.ca.gov/hq/cqsc TO VIEW EQUIPMENT QUALITY STANDARDS.
2. ALL JOINTS TO BE WELDED CONTINUOUS UNLESS OTHERWISE SPECIFIED. SIZE OF ALL WELDS TO BE AT LEAST THE THICKNESS OF THE THINNER OF THE ADJACENT METALS. WELDS TO BE UNIFORM AND NEAT IN APPEARANCE.
3. THE WORK SHALL BE POSITIONED FOR FLAT WELDING WHENEVER POSSIBLE. USE PROPER PROCEDURES AND SEQUENCE OF WELDING TO AVOID NEEDLESS DISTORTION AND MINIMIZE SHRINKAGE STRESSES OF THE ASSEMBLY.
4. ALL STEEL NOT SPECIFIED SHALL BE ASTM A36 OR BETTER.
5. REMOVE ALL BURRS AND SHARP EDGES.
6. ALL 1/4 AND 5/16 BOLTS, WASHERS AND NUTS TO BE GRADE 5 MINIMUM, ZINC PLATED. ALL BOLTS, WASHERS AND NUTS ABOVE 5/16 SHALL BE GRADE 8, YELLOW CHROMATE PLATED. ALL BOLTS SHALL HAVE TWO THREADS MINIMUM EXTENDING BEYOND THE NUT WHEN PROPERLY TIGHTENED UNLESS OTHERWISE NOTED.
7. SEE SHEET 1-61500-2-BA2 TO INSTALL.

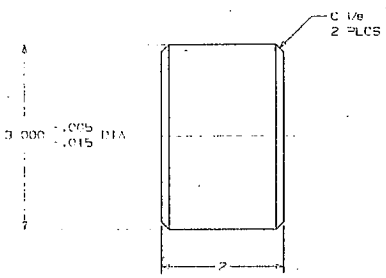


ITEM 309 7

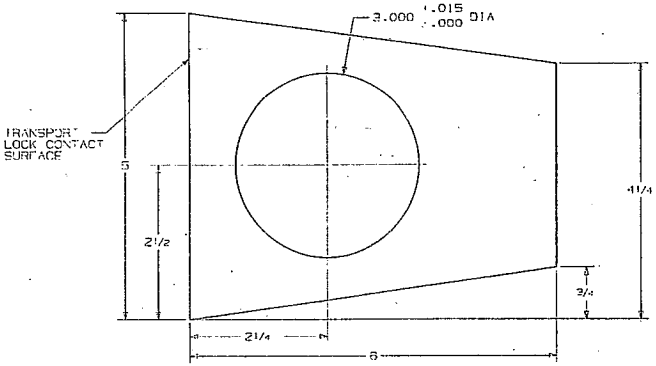


ITEM 308 7

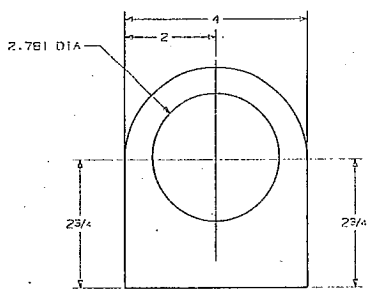


ITEM 310

# PE 32-12-5461

©2009 California Department of Transportation
All Rights Reserved
US Patent # 7,410,321 B1

| REV | DESCRIPTION | BY |
|---|---|---|
| G | 09/09 NEW PATENT NUMBER | JDR |
| E | 06/08 ADDED ITEM 310 | SP |
| B | 09/05 ADDED (MIN) TO #303 | JDR |

NEXT ASSEMBLY

STATE OF CALIFORNIA
DEPARTMENT OF TRANSPORTATION
DIVISION OF EQUIPMENT

MOVING BARRIER TRAILER
ROLLER DETAILS

SCALE NOTED | DATE 01/02 | 1-61500 3 BM3
DRAWN WHEELER | DESIGNED STAFF
CHECKED | CROUP 3 OF 11

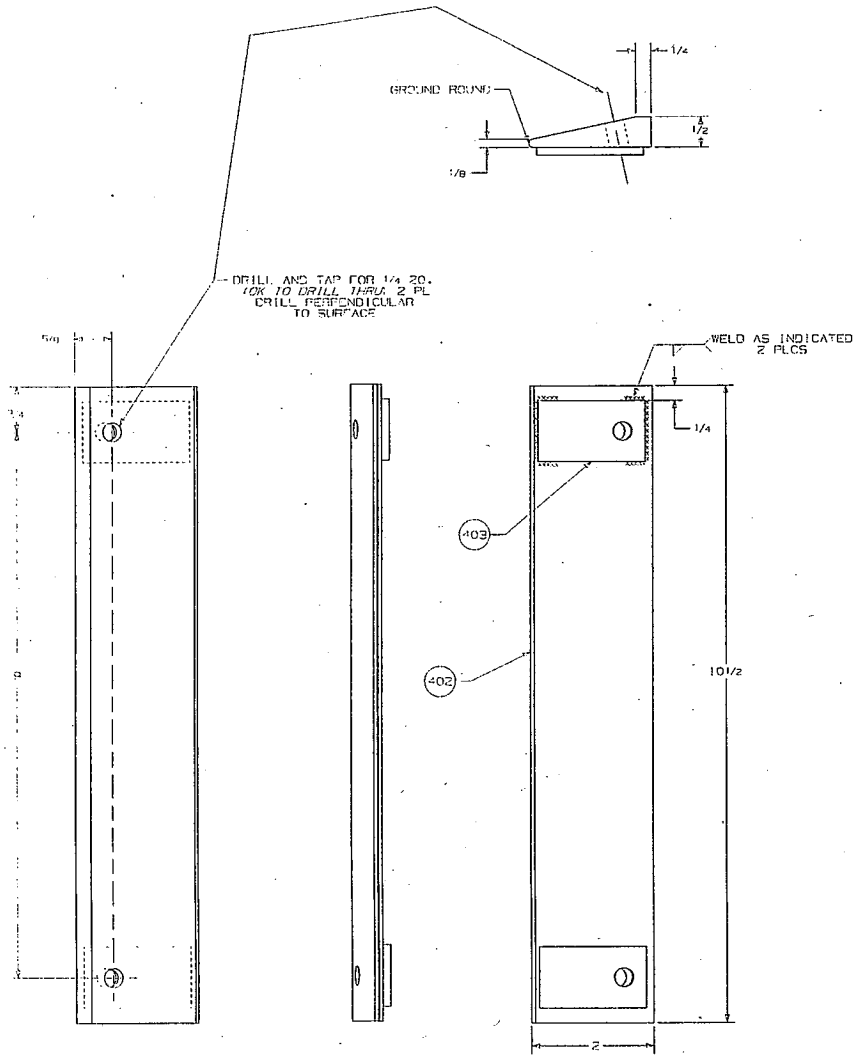


ASSEMBLY 401

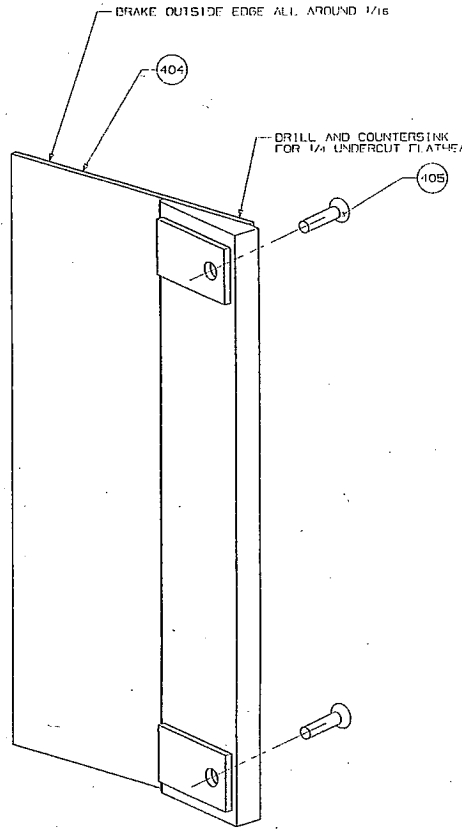


## BILL OF MATERIALS

| ITEM | QTY | DESCRIPTION |
|---|---|---|
| 401 | 1 | WELDED ASSEMBY C/O ITEMS 402 & 403 |
| 402 | 1 | 1/2 x 2 x 10 1/2 HRS PLATE |
| 403 | 2 | 1/8 x 1 x 1 3/4 WEAR PLATES |
| 404 | 2 | 1/8 x 10 1/2 x 5 [illegible] POLYETHYLENE, COLOR BLACK. McMASTER #[illegible] |
| 405 | 2 | 1/4-20 x 1/2, UNDERCUT FLAT HEAD PHILLIPS, 18-8 SST. McMASTER 91099A[illegible] |

(2 TOTAL)

NOTES:

1. ALL WELDS, ELECTRICAL AND PAINT WILL BE IN COMPLIANCE WITH CALTRANS EQUIPMENT QUALITY STANDARDS. GO TO www.dot.ca.gov/hq/[illegible] TO VIEW EQUIPMENT QUALITY STANDARDS.
2. ALL JOINTS TO BE WELDED CONTINUOUS UNLESS OTHERWISE SPECIFIED. SIZE OF ALL WELDS TO BE AT LEAST THE THICKNESS OF THE THINNER OF THE ADJACENT METALS. WELDS TO BE UNIFORM AND NEAT IN APPEARANCE.
3. THE WORK SHALL BE POSITIONED FOR FLAT WELDING WHENEVER POSSIBLE. USE PROPER PROCEDURES AND SEQUENCE OF WELDING TO AVOID NEEDLESS DISTORTION AND MINIMIZE SHRINKAGE STRESSES OF THE ASSEMBLY.
4. ALL STEEL NOT SPECIFIED SHALL BE ASTM A36 OR BETTER.
5. REMOVE ALL BURRS AND SHARP EDGES.

# PE 32-12-5461

©2008 California Department of Transportation
All Rights Reserved
US Patent # 7,410,721 B1

| REV | DESCRIPTION | BY |
|---|---|---|
| G | 08/08 NEW PATENT NUMBER | JOR |
| B | 11/05 ADDED ITEM #404 | DOWNIN |

NEXT ASSEMBLY

STATE OF CALIFORNIA
DEPARTMENT OF TRANSPORTATION
DIVISION OF EQUIPMENT

BARRIER TRAILER
H-BEAM TO BOX BEAM TRANSITION

| | | | |
|---|---|---|---|
| SCALE FULL | DATE 3/20/02 | | 1 81500-3 BM4 |
| DRAWN DOWNIN | DESIGNED WHEELER | | |
| CHECKED | GROUP 3 OF 11 | | |

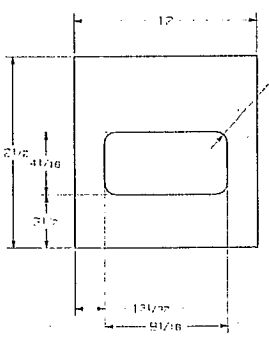


ITEM 503
SCALE: 1/4

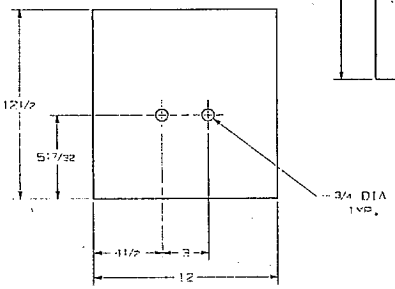


ITEM 504
SCALE: 1/4

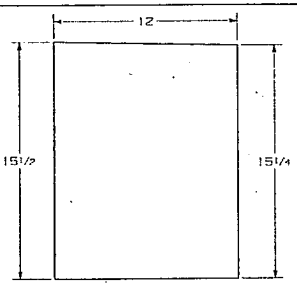


ITEM 502
SCALE: 1/4

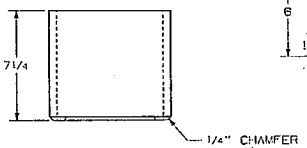


ITEM 506
SCALE: 1/4
GRIND INSIDE WELD SEAM SMOOTH

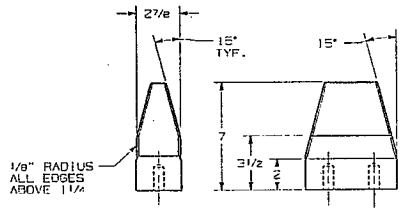


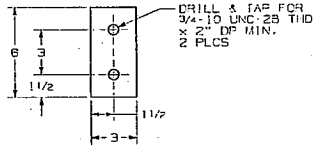


ITEM 508
SCALE: 1/4

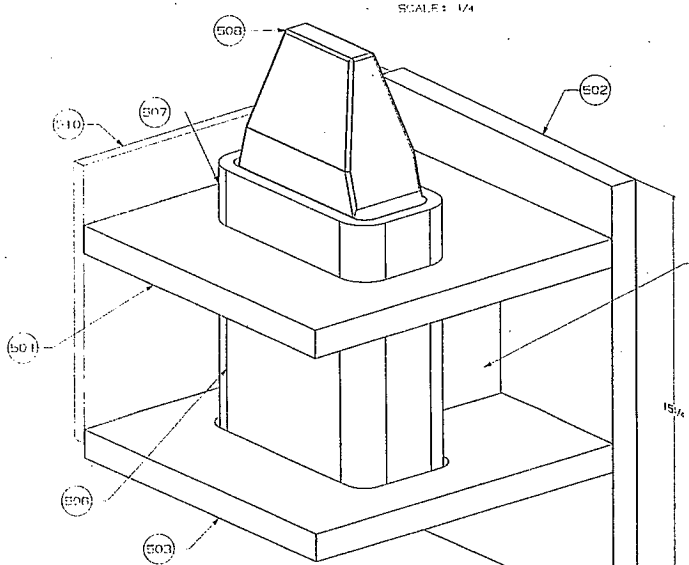


ITEM 501
SCALE: 1/2
ISO. VIEW

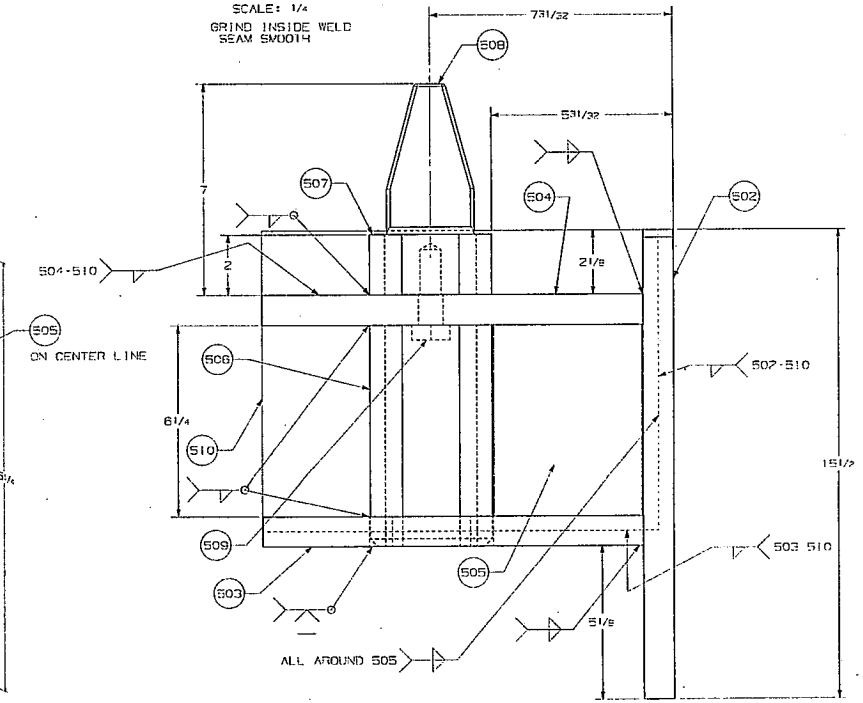


SCALE: 1/2
SIDE VIEW

## BILL OF MATERIALS

| ITEM | QTY | DESCRIPTION |
|---|---|---|
| 501 | 1 | ASSEMBLY C/O ITEMS 502 510 |
| 502 | 1 | 1 x 12 x 15 1/2 LG HRS PLATE |
| 503 | 1 | 1 x 12 x 12 1/2 LG HRS PLATE |
| 504 | 1 | 1 x 12 x 12 1/2 LG HRS PLATE |
| 505 | 1 | 1/2 x 6 1/4 x 47 3/8 LG HRS FLATBAR |
| 506 | 1 | 8 x 4 x 1/2 W x 7 1/4 LG STL RECT TUBE |
| 507 | 1 | 8 x 4 x 1/2 W x 2 LG STL RECT TUBE |
| 508 | 1 | 3 x 6 x 7 LG CD 1018 FLAT |
| 509 | 2 | 3/4" x 2 1/2 LG UNC GRD 8 BOLT & LOCK WASHER |
| 510 | 1 | 1/2 x 9 7/8 x 13 LG HRS PLATE |

NOTES:
1. ALL WELDS, ELECTRICAL AND PAINT WILL BE IN COMPLIANCE WITH CALTRANS EQUIPMENT QUALITY STANDARDS, GO TO www.dot.ca.gov/hq/eqpac TO VIEW EQUIPMENT QUALITY STANDARDS.
2. ALL JOINTS TO BE WELDED CONTINUOUS UNLESS OTHERWISE SPECIFIED. SIZE OF ALL WELDS TO BE AT LEAST THE THICKNESS OF THE THINNER OF THE ADJACENT METALS. WELDS TO BE UNIFORM AND NEAT IN APPEARANCE.
3. THE WORK SHALL BE POSITIONED FOR FLAT WELDING WHENEVER POSSIBLE. USE PROPER PROCEDURES AND SEQUENCE OF WELDING TO AVOID NEEDLESS DISTORTION AND MINIMIZE SHRINKAGE STRESSES OF THE ASSEMBLY.
4. ALL STEEL NOT SPECIFIED SHALL BE ASTM A36 OR BETTER.
5. REMOVE ALL BURRS AND SHARP EDGES.
6. ALL 1/4 AND 5/16 BOLTS, WASHERS AND NUTS TO BE GRADE 5 MINIMUM, ZINC PLATED. ALL BOLTS, WASHERS AND NUTS ABOVE 5/16 SHALL BE GRADE 8, YELLOW CHROMATE PLATED. ALL BOLTS SHALL HAVE TWO THREADS MINIMUM EXTENDING BEYOND THE NUT WHEN PROPERLY TIGHTENED UNLESS OTHERWISE NOTED.

PE 32-12-5461

© 2008 California Department of Transportation
All Rights Reserved
US Patent # 7,410,321 B1

| REV | DESCRIPTION | BY |
|---|---|---|
| G | 08/06 NEW PATENT NUMBER | JDR |
| E | 06/08 ITEM 502 WAS 1 X 12 X 13 1/2<br>ITEM 506 WAS 7/14<br>ITEM 507 WAS 8 X 4 X 1/2 W X 1/4<br>ITEM 508 WAS 5 1/2, 2 1/2, AND 1/4<br>ITEM 510 WAS 1/2 X 8 7/8 X 13 | CP |
| D | 09/05 ADDED ITEM #510 | JDR |

NEXT ASSEMBLY: X

STATE OF CALIFORNIA
DEPARTMENT OF TRANSPORTATION
DIVISION OF EQUIPMENT

BARRIER TRAILER
BOX-BEAM END WITH PIN

| | | | |
|---|---|---|---|
| ISSUE AS NOTED | DATE 12 Apr 02 | 1 61500 3 BME | |
| DRAWN J Payne | DESIGNED Matsuo | | |
| TRACED | GROUP 3 OF 11 | SHEET 3 OF 3 SHEETS | |

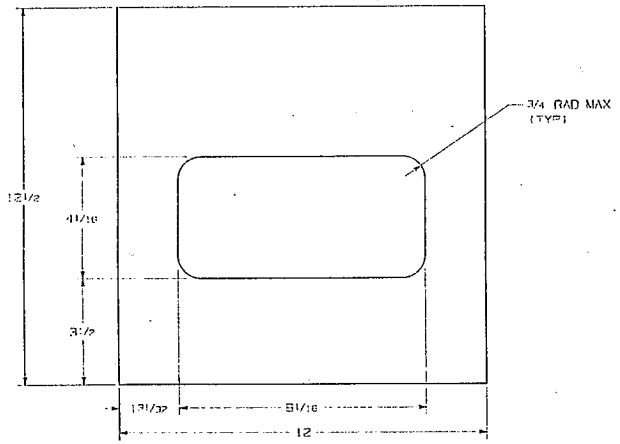


ITEM 603
SCALE: 1/2

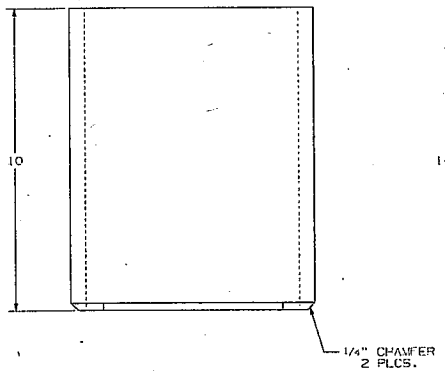


ITEM 605
SCALE: 1/4
GRIND INSIDE WELD
SEAM SMOOTH

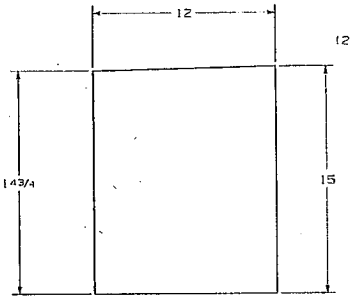


ITEM 602
SCALE: 1/4

## BILL OF MATERIALS

| ITEM | QTY | DESCRIPTION |
|---|---|---|
| 601 | 1 | ASSEMBLY C/O ITEMS 602 606 |
| 602 | 1 | 1 x 12 x 15 LG HRS PLATE |
| 603 | 2 | 1 x 12 x 12 1/2 LG HRS PLATE |
| 604 | 1 | 1/2 x 6 1/4 x 47/8 LG HRS PLATE |
| 605 | 1 | 6 x 4 x .50 W x 10 LG ST. RECT TUBE |
| 606 | 1 | 1/2" x 03/4 x 13 LG HRS PLATE |

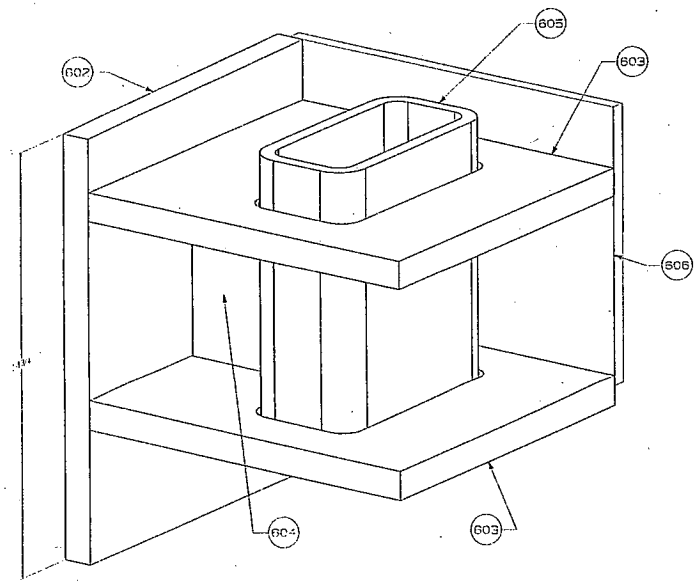


ITEM 601
SCALE 1/2
ISO VIEW

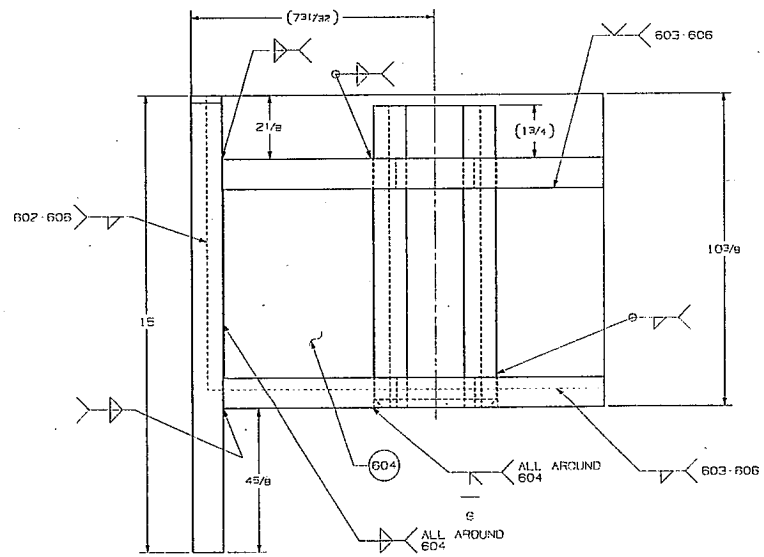


ITEM 601
SCALE 1/2
SIDE VIEW

NOTES:
1. ALL WELDS, ELECTRICAL AND PAINT WILL BE IN COMPLIANCE WITH CALTRANS EQUIPMENT QUALITY STANDARDS. GO TO www.dot.ca.gov/hq/eqmc TO VIEW EQUIPMENT QUALITY STANDARDS.
2. ALL JOINTS TO BE WELDED CONTINUOUS UNLESS OTHERWISE SPECIFIED. SIZE OF ALL WELDS TO BE AT LEAST THE THICKNESS OF THE THINNER OF THE ADJACENT METALS. WELDS TO BE UNIFORM AND NEAT IN APPEARANCE.
3. THE WORK SHALL BE POSITIONED FOR FLAT WELDING WHENEVER POSSIBLE. USE PROPER PROCEDURES AND SEQUENCE OF WELDING TO AVOID NEEDLESS DISTORTION AND MIN. WITH SHRINKAGE STRESSES OF THE ASSEMBLY.
4. ALL STEEL NOT SPECIFIED SHALL BE ASTM A36 OR BETTER.
5. REMOVE ALL BURRS AND SHARP EDGES.

PE 32-12-5461

©2008 California Department of Transportation
All Rights Reserved
US Patent # 7,410,321 B1

| REV | DATE | DESCRIPTION | BY |
|---|---|---|---|
| G | 08/08 | NEW PATENT NUMBER | JDR |
| E | 06/06 | ITEM 602 WAS 1 X 12 X 14<br>ITEM 605 WAS 01/4<br>ITEM 606 WAS 1/2 X 6 1/4 X 12 1/2 | GI |
| D | 09/05 | ADDED ITEM #606 | JDR |

NEXT ASSEMBLY: X

STATE OF CALIFORNIA
DEPARTMENT OF TRANSPORTATION
DIVISION OF EQUIPMENT

BARRIER TRAILER
H-BEAM END WITH SOCKET

| | | | |
|---|---|---|---|
| SCALE | AS NOTED | DATE | 12 Apr 02 |
| DRAWN | J Payne | ASSEMBLY NUMBER | 1 61500 3 0MS |
| CHECKED | | GROUP 3 CL 11 | |

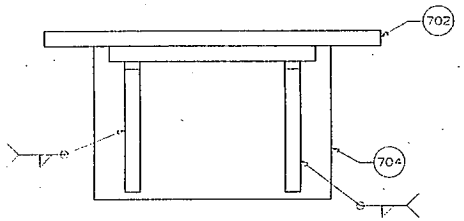


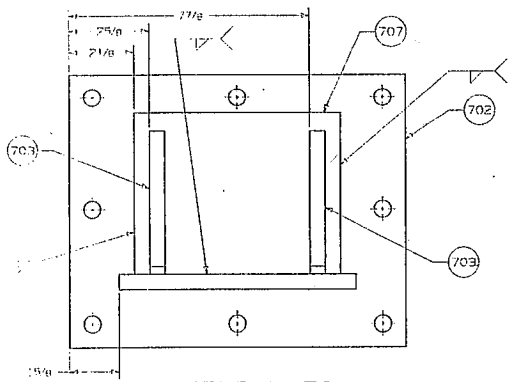


ASSEMBLY 701

FORCE ON STOP PLATE ITEM 704 SHALL TRANSFER TO EDGE OF ITEM 707. BOLTS SHALL NOT BE IN SHEAR LOADING.

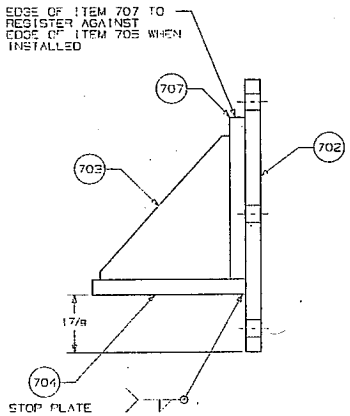


STOP PLATE

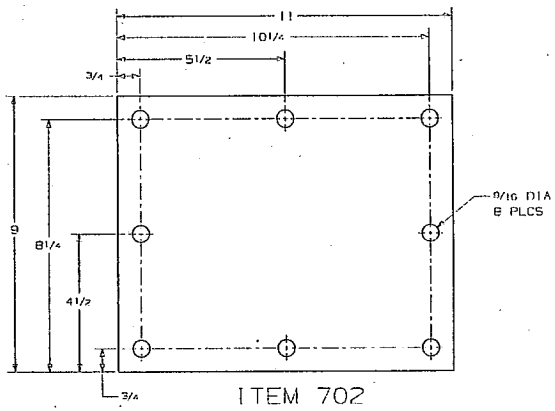


ITEM 702
SCALE: 1/2

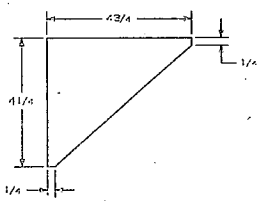


ITEM 703
SCALE: 1/2

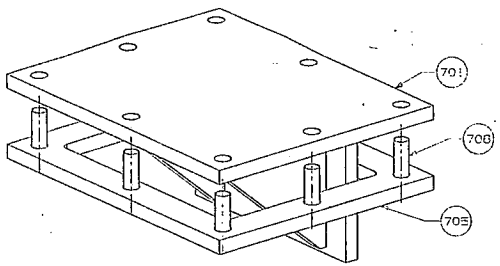


ISO VIEW

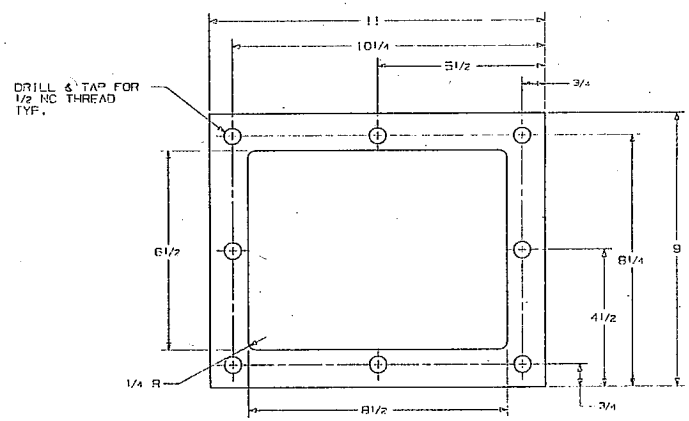


ITEM 705
SCALE: 1/2

## BILL OF MATERIALS

| ITEM | QTY | DESCRIPTION |
|---|---|---|
| 701 | 1 | WELDED ASSEMBLY C/O ITEMS 702 704, 707 |
| 702 | 1 | 1/2 x 9 x 11 HRS PLATE |
| 703 | 2 | 1/2 x 4 3/4 x 4 3/4 HRS PLATE |
| 704 | 1 | 1/2 X 5 X 7 3/4 HRS PLATE |
| 705 | 1 | 1/2 x 9 x 11 HRS PLATE |
| 706 | 8 | 1/2 x 1 3/4 STUD MJMASTER CARR# 91863A218 W/WASHERS & NYLOCK NUTS |
| 707 | 1 | 1/2 x 5 7/8 x 6 3/4 HRS PLATE |

(2 TOTAL)

NOTES:
1. ALL WELDS, ELECTRICAL AND PAINT WILL BE IN COMPLIANCE WITH CALTRANS EQUIPMENT QUALITY STANDARDS. GO TO www.dot.ca.gov/hq/esc/e TO VIEW EQUIPMENT QUALITY STANDARDS.
2. ALL JOINTS TO BE WELDED CONTINUOUS UNLESS OTHERWISE SPECIFIED. SIZE OF ALL WELDS TO BE AT LEAST THE THICKNESS OF THE THINNER OF THE ADJACENT METALS. WELDS TO BE UNIFORM AND NEAT IN APPEARANCE.
3. THE WORK SHALL BE POSITIONED FOR FLAT WELDING WHENEVER POSSIBLE. USE PROPER PROCEDURES AND SEQUENCE OF WELDING TO AVOID NEEDLESS DISTORTION AND MINIMIZE SHRINKAGE STRESSES IN THE ASSEMBLY.
4. ALL STEEL NOT SPECIFIED SHALL BE ASTM A36 OR BETTER.
5. REMOVE ALL BURRS AND SHARP EDGES.

PE 32-12-5461

©2008 California Department of Transportation
All Rights Reserved
US Patent # 7,416,371 B1

| REV | DATE | DESCRIPTION | BY |
|---|---|---|---|
| G | 09/08 | NEW PATENT NUMBER | JDR |
| E | 06/08 | UPDATES TO TITLE BLOCK | J HAYES |
| D | 09/05 | ADDED ITEM #707 | JDR |

NEXT ASSEMBLY

STATE OF CALIFORNIA
DEPARTMENT OF TRANSPORTATION
DIVISION OF EQUIPMENT

BARRIER TRAILER
BEAM STOP FOR EXTENSION

| | | | |
|---|---|---|---|
| SCALE AS NOTED | DATE 04/27/02 | 1-61500 3 BM7 |
| DRAWN DOWNIN | DESIGNED/CHECKED | |
| CHECKED | GROUP 3 OF 11 | SHEET 1 OF 1 SHEETS |

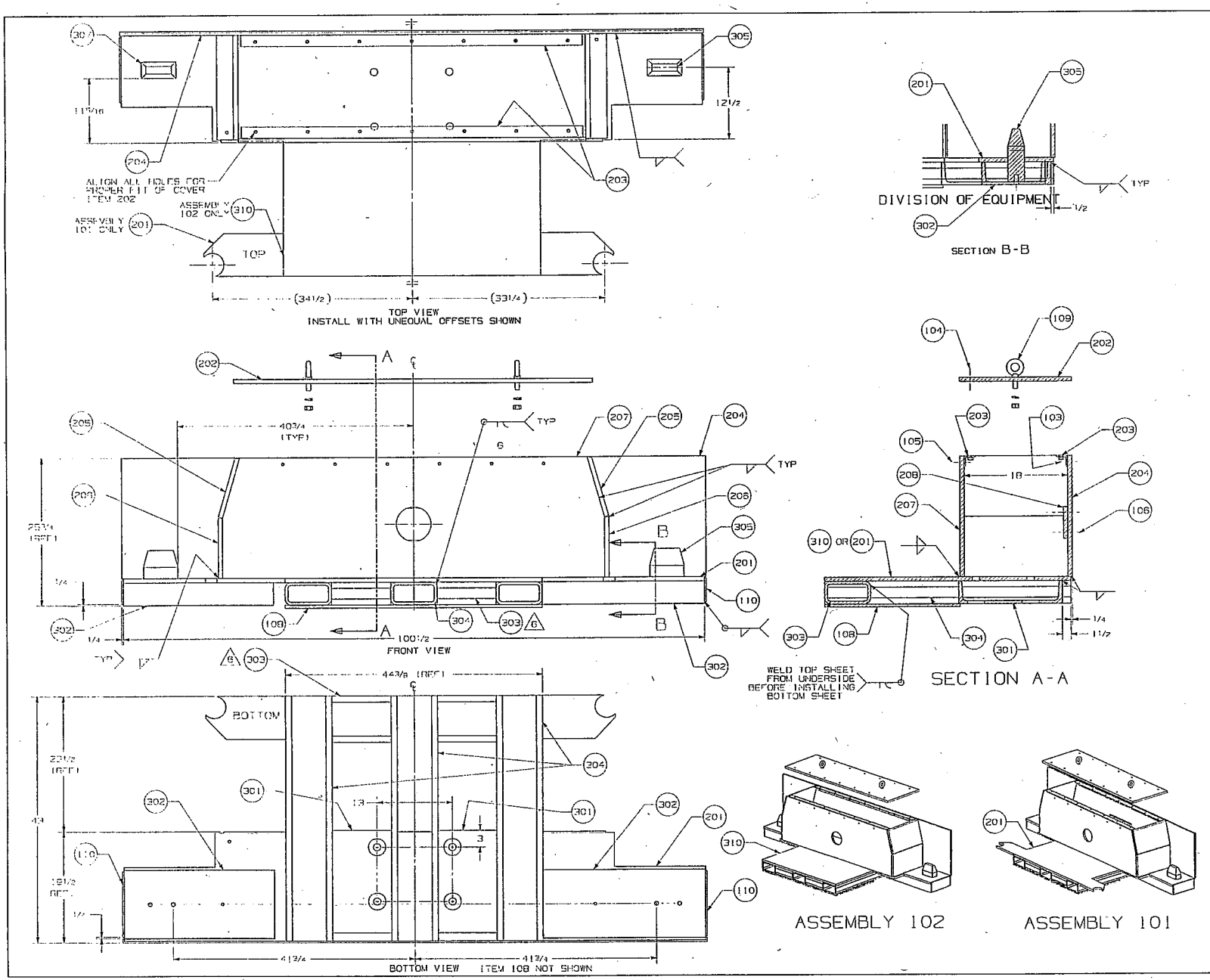


## BILL OF MATERIALS

| ITEM | QTY | DESCRIPTION |
|---|---|---|
| 101 | 1 | ASSEMBLY CONSISTS OF ITEMS 103-109, 202-208, 301 305 |
| 102 | 1 | ASSEMBLY CONSISTS OF ITEMS 103 109, 201 209 AND 301-305 |
| 103 | 6 | HEX HD CAP SCREW, 1/2-13 UNC X 1", SPLIT LOCK WASH. GRADE 8 |
| 104 | 14 | HEX HD CAP SCREW, 1/2-13 UNC X 1 3/4", SPLIT LOCK WASH. GRADE 8 |
| 105 | 6 | HEX HD CAP SCREW, 1/2 13 UNC X 2", SPLIT LOCK WASH, SAE WASH, HEX NUT GRADE 8 |
| 106 | 4 | HEX HD CAP SCREW, 1/2 13 UNC X 1 3/4", SPLIT LOCK WASH, SAE WASH. GRADE 8 |
| 107 | 4 | HEX HD CAP SCREW, 3/4-10 UNC X 2", SPLIT LOCK WASH. GRADE 8 |
| 108 | 2 | 1/2 x 23 1/2 x 44 3/8 A514 PLATE |
| 109 | 2 | EYEBOLT, SHOULDER STYLE FORGED. 3/4-10 thd X 1 1/2 id. SPLIT LOCK WASH, HEX NUT 3/4-10, GRADE 8 |
| 110 | 4 | 1/4 x 4 1/4 x 11 1/2 HRS PLATE ASTM A36 |

NOTES:

1. ALL WELDS, ELECTRICAL AND PAINT WILL BE IN COMPLIANCE WITH CALTRANS EQUIPMENT QUALITY STANDARDS. GO TO www.dot.ca.gov/hq/eqsc TO VIEW EQUIPMENT QUALITY STANDARDS.
2. ALL JOINTS TO BE WELDED CONTINUOUS UNLESS OTHERWISE SPECIFIED. SIZE OF ALL WELDS TO BE AT LEAST THE THICKNESS OF THE THINNER OF THE ADJACENT METALS. WELDS TO BE UNIFORM AND NEAT IN APPEARANCE.
3. THE WORK SHALL BE POSITIONED FOR FLAT WELDING WHENEVER POSSIBLE. USE PROPER PROCEDURES AND SEQUENCE OF WELDING TO AVOID NEEDLESS DISTORTION AND MINIMIZE SHRINKAGE STRESSES OF THE ASSEMBLY.
4. ALL STEEL NOT SPECIFIED SHALL BE ASTM A36 OR BETTER.
5. REMOVE ALL BURRS AND SHARP EDGES.
6. LOCATE 303 FLUSH WITH TOP SURFACE AND ENDS OF 304
7. ALL 1/4 AND 5/16 BOLTS, WASHERS AND NUTS TO BE GRADE 5 MINIMUM, ZINC PLATED. ALL BOLTS, WASHERS AND NUTS ABOVE 5/16 SHALL BE GRADE 8, YELLOW CHROMATE PLATED. ALL BOLTS SHALL HAVE TWO THREADS MINIMUM EXTENDING BEYOND THE NUT WHEN PROPER Y TIGHTENED UNLESS OTHERWISE NOTED.

# PE 32-12-5461

©2008 California Department of Transportation
All Rights Reserved
US Patent # 7,410,221 B1

| REV | DESCRIPTION | BY |
|---|---|---|
| G | 06/09 NEW PATENT NUMBER | JDR |
| E | 06/09 REMOVED 8" EXTENSIONS ON 304 OF 101 | GP |
| B | 10/05 MODIFIED ASSEMBLY 101 | RAMOS |

NEXT ASSEMBLY

STATE OF CALIFORNIA
DEPARTMENT OF TRANSPORTATION

BARRIER TRAILER
ACTUATOR HOUSING ASSEMBLY

SCALE 1/8 | DATE 4 Feb 02 | 1 61500 4-1161
DRAWN J Payne | DESIGNED Matsua
CHECKED | GROUP 4 OF 11

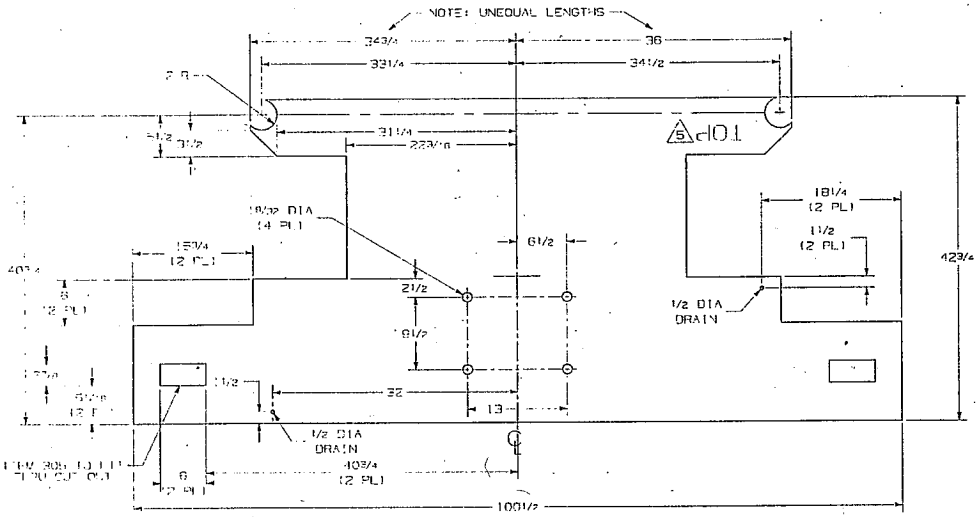


ITEM 201

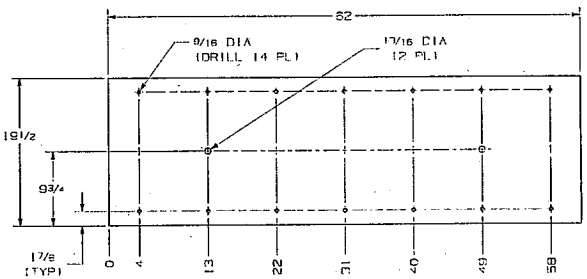


ITEM 202

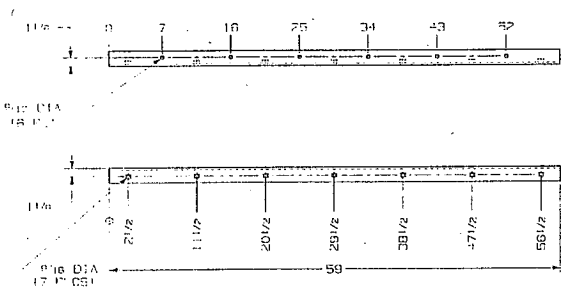


ITEM 203

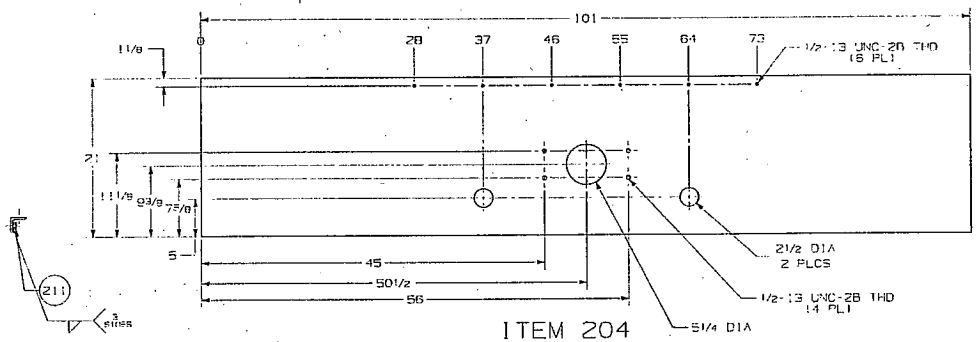


ITEM 204

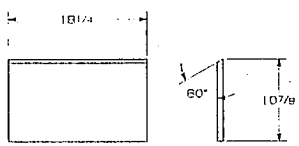


ITEM 205

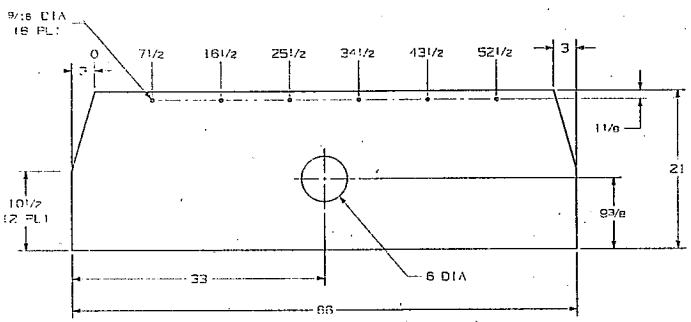


ITEM 207

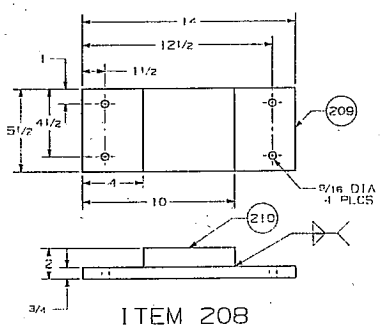


ITEM 208

## BILL OF MATERIALS

| ITEM | QTY | DESCRIPTION |
|---|---|---|
| 201 | 1 | 3/4 X 423/4 X 101 LG. HR STEEL PLATE, ASTM A36 |
| 202 | 1 | 3/4 X 191/2 X 82 LG. HR STEEL PLATE, ASTM A36 |
| 203 | 2 | 2 x 2 x1/4 X 59 LG. ANGLE, STEEL, ASTM A36 |
| 204 | 1 | 3/4 X 21 X 101 LG. HR STEEL PLATE, ASTM A36 |
| 205 | 2 | 3/4 X 107/8 X 181/4 LG. HR STEEL PLATE, ASTM A36 |
| 206 | 2 | 3/4 X 101/2 X 181/4 LG. HR STEEL PLATE, ASTM A36 |
| 207 | 1 | 3/4 X 21 X 66 LG. HR STEEL PLATE, ASTM A36 |
| 208 | 2 | WELDED ASSEMBLY CONSIST OF ITEMS 209 & 210 |
| 209 | 1 | 3/4 X 51/2 X 14 LG HR STEEL PLATE OR BAR, ASTM A36 |
| 210 | 1 | 11/4 X 51/2 X 6 LG HR STEEL PLATE OR BAR, ASTM A36 |
| 211 | 14 | NUT, HEX GRADE 8, 1/2 13 UNC |

NOTES:

1. ALL WELDS, ELECTRICAL AND PAINT WILL BE IN COMPLIANCE WITH CALTRANS EQUIPMENT QUALITY STANDARDS, GO TO www.dot.ca.gov/hq/esc/ TO VIEW EQUIPMENT QUALITY STANDARDS.
2. ALL JOINTS TO BE WELDED CONTINUOUS UNLESS OTHERWISE SPECIFIED. SIZE OF ALL WELDS TO BE AT LEAST THE THICKNESS OF THE THINNER OF THE ADJACENT METALS. WELDS TO BE UNIFORM AND NEAT IN APPEARANCE.
3. ALL STEEL NOT SPECIFIED SHALL BE ASTM A36 OR BETTER.
4. REMOVE ALL BURRS AND SHARP EDGES.
5. STAMP OR SCRIBE NOTE: "TOP" FOR TOP OF PLATE AND "BOTTOM" FOR BOTTOM OF PLATE AS REQUIRED FOR ASSEMBLY.

# PE 32-12-5461

©2000 California Department of Transportation
All Rights Reserved
US Patent # 7,416,361 B1

| REV | DESCRIPTION | BY |
|---|---|---|
| G | 09/08 NEW PATENT NUMBER | JDR |
| F | 06/06 ADDED NOTE 5 AND DETAIL NOTE 13 20° | DP |
| D | 06/05 INCREASED ITEM 201 FROM 19 TO 423/4 | DOWTY |

| NEXT ASSEMBLY | STATE OF CALIFORNIA DEPARTMENT OF TRANSPORTATION |
|---|---|
| | DIVISION OF EQUIPMENT |
| | BARRIER TRAILER ACTUATOR HOUSING DETAILS |
| | SCALE 1/8 DATE 4 Feb 02 |
| | DRAWN J Payne DRAWING NUMBER 1 81500 4-H02 |
| | CHECKED GROUP 4 OF 11 SHEET 12-12-5461 |

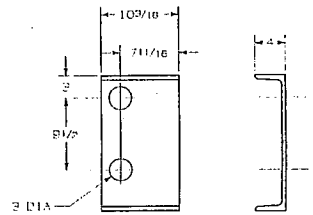


ITEM 301

RIGHT SIDE SHOWN, LEFT OPPOSITE
EQUIVALENT FABRICATED SECTION PERMISSIBLE

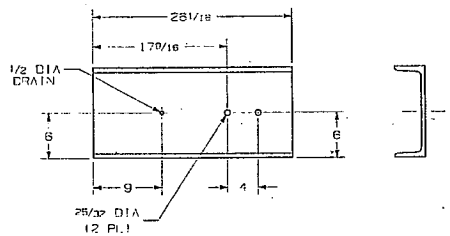


ITEM 302

EQUIVALENT FABRICATED SECTION PERMISSIBLE

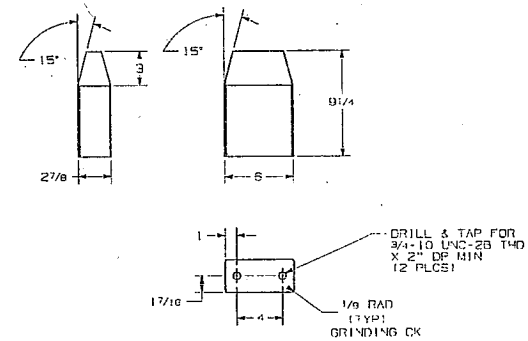


ITEM 305

## BILL OF MATERIALS

| ITEM | QTY | DESCRIPTION |
|---|---|---|
| 301 | 2 | MC18 X 45.8 lbs/ft X 10 3/16 LG. MC CHANNEL, STEEL, ASTM A36 |
| 302 | 2 | MC12 X 45 lbs/ft X 26 5/16 LG. MC CHANNEL, STEEL, ASTM A36 |
| 303 | 2 | 8 X 4 X 1/2 X 10 3/16 LG. RECT TUBE, STEEL, A 500 G.B. |
| 304 | 3 | 8 X 4 X 1/2 X 42 3/4 LG. RECT TUBE, STEEL, A500 G.B. |
| 305 | 2 | 3 X 6 X 9 1/4 LG. HR STEEL PLATE OR FLAT, ASTM A36 |
| | | |
| | | |
| | | |
| | | |
| 310 | 1 | 3/4 x 42 3/4 x 101 HRS PLATE ASTM A36 |

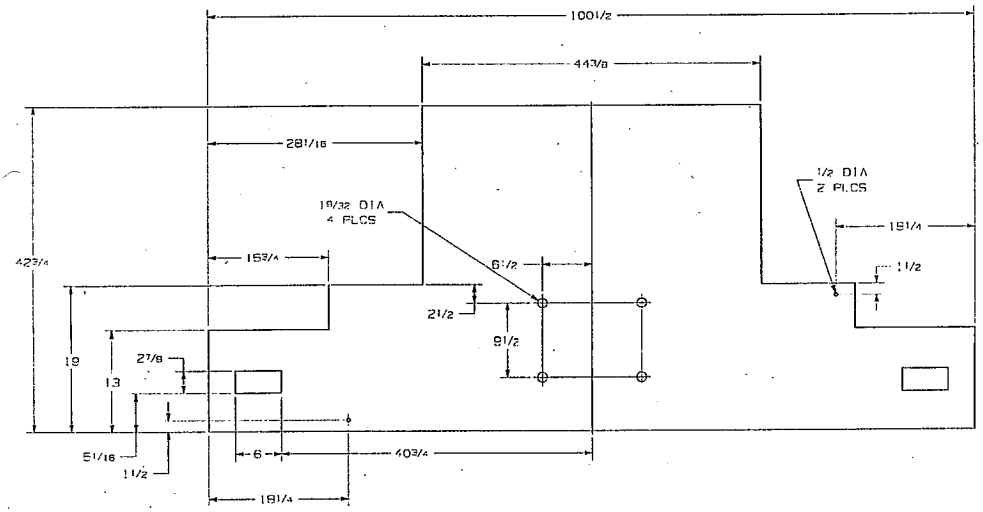


ITEM 310

NOTES:
1. ALL WELDS, ELECTRICAL AND PAINT WILL BE IN COMPLIANCE WITH CALTRANS EQUIPMENT QUALITY STANDARDS. GO TO www.dot.ca.gov/hq/eqsc TO VIEW EQUIPMENT QUALITY STANDARDS.
2. ALL STEEL NOT SPECIFIED SHALL BE ASTM A36 OR BETTER.
3. REMOVE ALL BURRS AND SHARP EDGES.

PE 32-12-5461

©2008 Cal Fornia Department of Transportation
All Rights Reserved
US Patent # 7,410,321 B1

| REV | | DESCRIPTION | BY |
|---|---|---|---|
| G | 05/08 | NEW PATENT NUMBER | JDR |
| E | 06/08 | REPLACED ITEM 306 W/304 REMOVED ITEM 307 | SP |
| B | 09/05 | REMOVED SPACER ITEM #308 | JP |

NEXT ASSEMBLY

STATE OF CALIFORNIA
DEPARTMENT OF TRANSPORTATION
DIVISION OF EQUIPMENT

BARRIER TRAILER
ACTUATOR HOUSING DETAILS

SCALE 1/8 | DATE 4 Feb 02 | 1 61500 4 H03
DRAWN J Payne | DESIGNED Jeremy
CHECKED | GROUP 4 OF 11

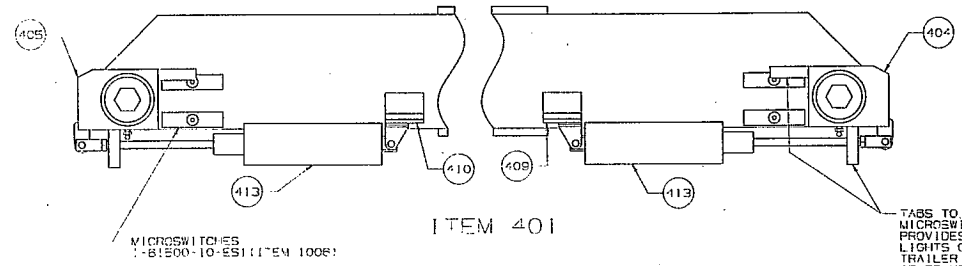


ITEM 401

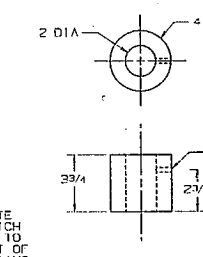


ITEM 403

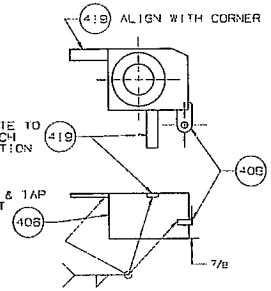


ITEM 404

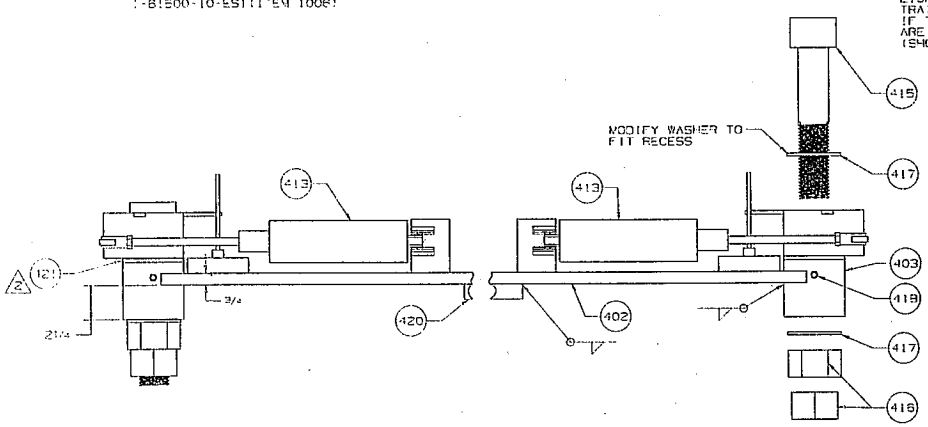


ITEM 401

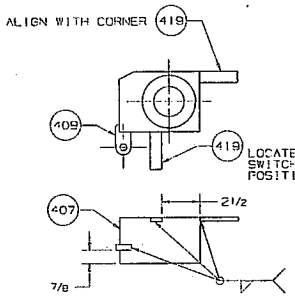


ITEM 405

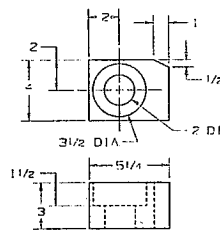


ITEM 406

ITEM 406 SHOWN
ITEM 407 IS OPPOSITE

2 DETERMINE THICKNESS AT INSTALLATION. SEE DWG# 1-61500-2-DA2

NOTES:

1. ALL JOINTS TO BE WELDED CONTINUOUS UNLESS OTHERWISE SPECIFIED. SIZE OF ALL WELDS TO BE AT LEAST THE THICKNESS OF THE THINNER OF THE ADJACENT METALS.

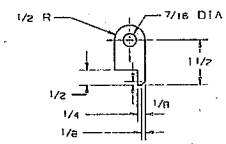


ITEM 408

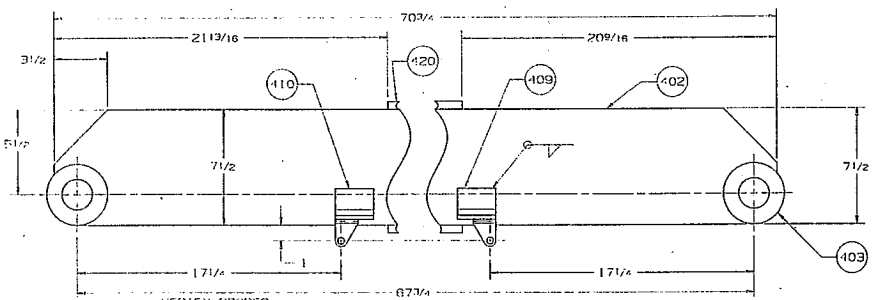


ITEM 401

BOTH SIDES ARE SYMETRICAL

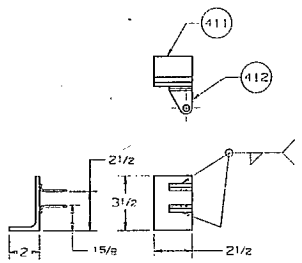


ITEM 409

ITEM 409 SHOWN
ITEM 410 IS OPPOSITE

## BILL OF MATERIALS

| ITEM | QTY | DESCRIPTION |
|---|---|---|
| 401 | 1 | ASS'Y C/O ITEMS 402 THRU 420 |
| 402 | 1 | 3/4 x 7 1/2 x 70 3/4 FIRE PLATE |
| 403 | 2 | 3 3/4 OD x 1 x 3 3/4 LG MECH TUBE |
| 404 | 1 | WELDED ASS'Y C/O 406, 408 & 419 |
| 405 | 1 | WELDED ASS'Y C/O 407, 408 & 419 |
| 406 | 1 | 3 x 4 x 5 1/4 LG FLATBAR |
| 407 | 1 | 3 x 4 x 5 1/4 LG FLATBAR |
| 408 | 2 | 1/4 x 1 x 2 1/2 LG FLATBAAR |
| 409 | 1 | WELDED ASS'Y C/O ITEMS 411 & 412 |
| 410 | 1 | WELDED ASS'Y C/O ITEMS 411 & 412 |
| 411 | 1 | 2 x 3 1/2 x 1/4 x 21/2 LG ANGLE |
| 412 | 2 | MOUNT, CYL. GRAINGER PART# 6J998 INGERSOLL-RAND ARC# 2" |
| 413 | 2 | CYLINDER, 6x21/2, GRAINGER PART# 6J... INGERSOLL-RAND ARC# 2425-DW3-DR0 |
| 414 | 2 | CLEVIS W/PIN,CYL. GRAINGER PART# 6J998 INGERSOLL-RAND ARC# 115008 |
| 415 | 2 | HEX SOCKET, 2 41/2 X 10 MCMASTER #91251A200 |
| 416 | 4 | NUT, 2" PART# 94805A045 MCMASTER-CARR |
| 417 | 4 | WASHER, 2" PART# 98023A046 MCMASTER-CARR |
| 418 | 2 | FITTING, ZERK 1/8 NPT |
| 419 | 4 | 3/16 x 3/4 x 21/2 LG FLATBAR |
| 420 | 1 | 1 x 61/2 x 29 3/8 LG FLAT PLATE |
| 421 | 2 | AR x 4 OD x 2 ID SPACER |

PE 32-12-5461

©2006 California Department of Transportation
All Rights Reserved
US Patent # 7,410,321 B1

| REV | DESCRIPTION | BY |
|---|---|---|
| G | 09/06 NEW PATENT NUMBER | JDR |
| E | 06/06 CHANGED ITEM 415 WAS 91251A202 REPLACED ITEM 412, 413, AND 414 | GP |
| 5 | 05/05 SHEET ADDED TO SET, REPLACED SHEET 4, SHEET 4 MOVED TO SHEET 7 | DOWNEN |

NEXT ASSEMBLY

STATE OF CALIFORNIA
DEPARTMENT OF TRANSPORTATION
DIVISION OF EQUIPMENT

BARRIER TRAILER
TRANSPORT LOCK

| SCALE AS NOTED | DATE 07/07/06 | 1 61500 4-1104 |
|---|---|---|
| DRAWN DOWNEN | ASSEMBLY NUMBER | |
| SHEETS | GROUP 4 OF 11 | |

## BILL OF MATERIALS

| ITEM | QTY | DESCRIPTION |
|---|---|---|
| 501 | 1 | 1/2 x 6 x 17 1/2 LG HRS FLATBAR |
| 502 | 1 | 1/2 x 6 x 19 1/2 LG HRS FLATBAR |
| 503 | 2 | 1/2 x 8 x 9 3/8 LG HRS FLATBAR |
| 504 | 2 | 1/2 x 1 x 5 3/8 LG HRS FLATBAR |
| 505 | 1 | 1/2 x 6 x 16 1/2 LG HRS FLATBAR |
| 506 | 1 | 1/2 x 6 x 18 1/4 LG HRS FLATBAR |

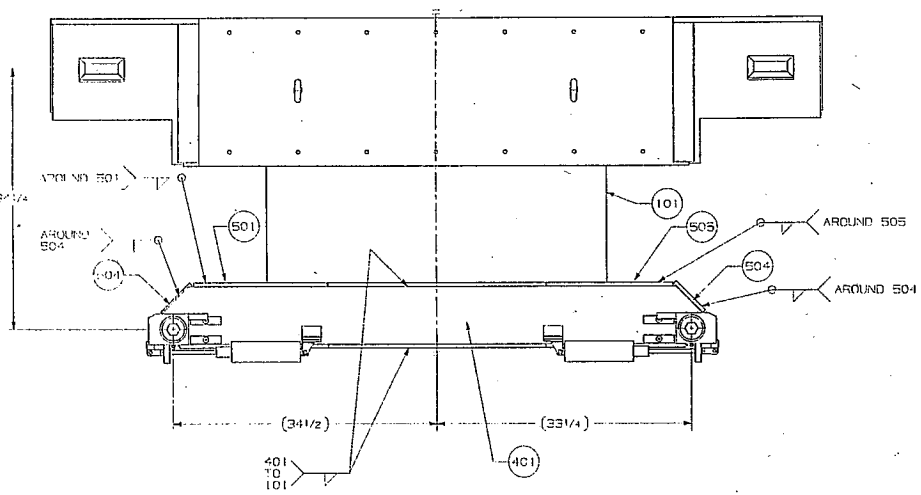


TRANSPORT LOCK ASSEMBLED TO ACTUATOR HOUSING
TOP VIEW
SCALE: 1/8

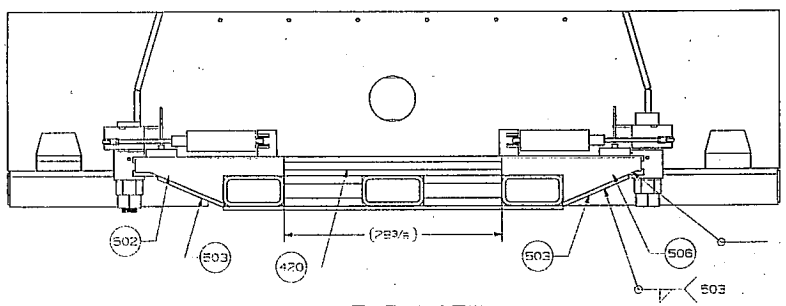


END VIEW
SCALE: 1/8

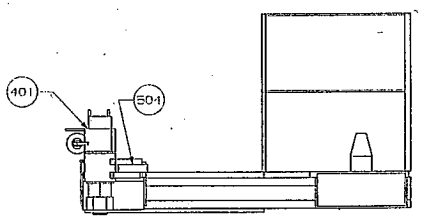


SIDE VIEW
SCALE: 1/8

NOTES:
1. ALL WELDS, ELECTRICAL AND PAINT WILL BE IN COMPLIANCE WITH CALTRANS EQUIPMENT QUALITY STANDARDS, GO TO www.dot.ca.gov/hq/esc/ TO VIEW EQUIPMENT QUALITY STANDARDS.
2. ALL JOINTS TO BE WELDED CONTINUOUS UNLESS OTHERWISE SPECIFIED. SIZE OF ALL WELDS TO BE AT LEAST THE THICKNESS OF THE THINNER OF THE ADJACENT METALS. WELDS TO BE UNIFORM AND NEAT IN APPEARANCE.
3. THE WORK SHALL BE POSITIONED FOR FLAT WELDING WHENEVER POSSIBLE. USE PROPER PROCEDURES AND SEQUENCE OF WELDING TO AVOID NEEDLESS DISTORTION AND MINIMIZE SHRINKAGE STRESSES OF THE ASSEMBLY.
4. ALL STEEL NOT SPECIFIED SHALL BE ASTM A36 OR BETTER.
5. REMOVE ALL BURRS AND SHARP EDGES.

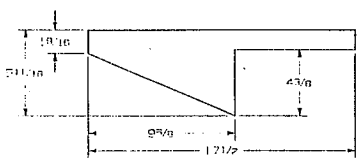


ITEM 501
SCALE: 1/4

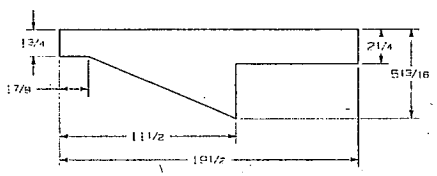


ITEM 502
SCALE: 1/4

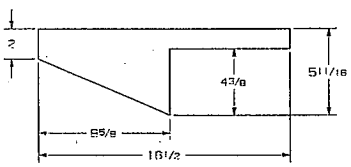


ITEM 505
SCALE: 1/4

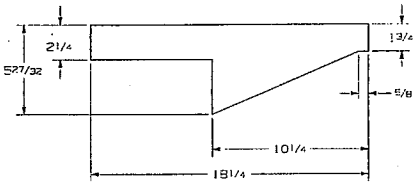


ITEM 506
SCALE: 1/4

# PE 32-12-5461

©2001 California Department of Transportation
All Rights Reserved
US Patent # 7,410,321 B1

| REV | DESCRIPTION | BY |
|---|---|---|
| G | 08/08 NEW PATENT NUMBER | JCR |
| B | 10/05 ADDED ITEM 401, 505, 506 | RAMOS |

NEXT ASSEMBLY

STATE OF CALIFORNIA
DEPARTMENT OF TRANSPORTATION
DIVISION OF EQUIPMENT

BARRIER TRAILER
TRUCK LOCK INSTALLATION

| | | | |
|---|---|---|---|
| SCALE AS NOTED | DATE 8/02/05 | 61500-4 1105 |
| DRAWN DOMKIN | DESIGNED MILLER | |
| CHECKED | GROUP 4 OF 11 | SHEET 5 OF 8 SHEETS |

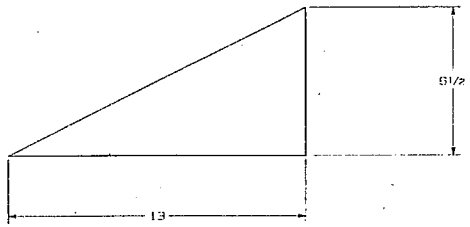


ITEM 603

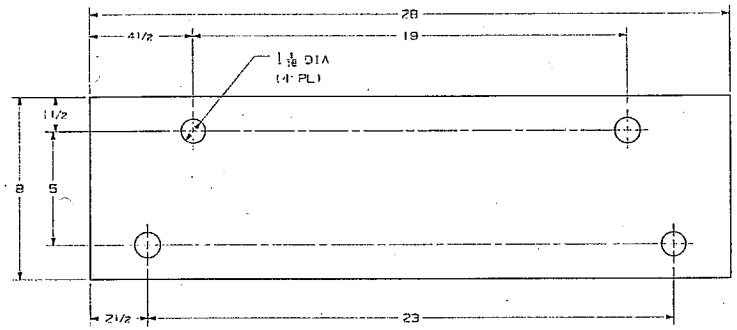


ITEM 602 AND 605

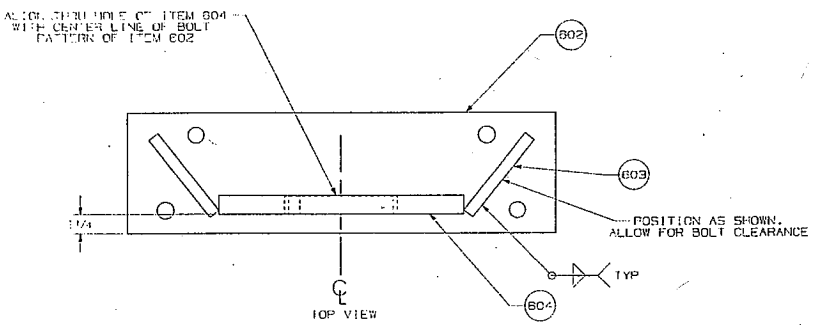


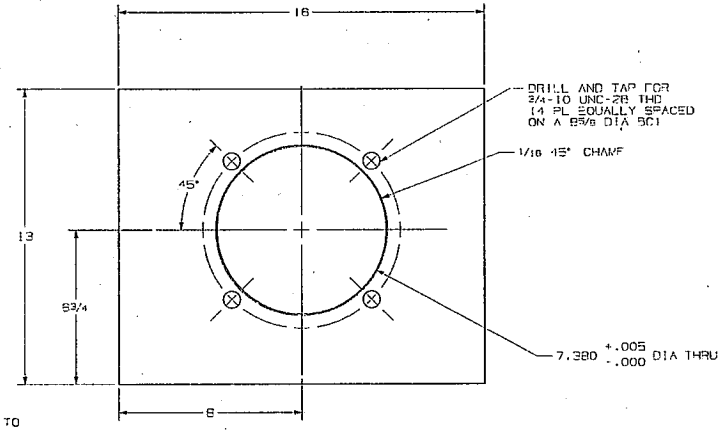


ITEM 604

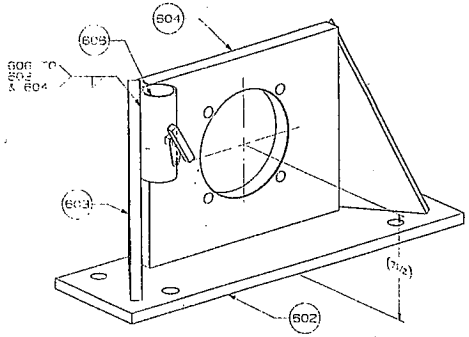


ITEM 601

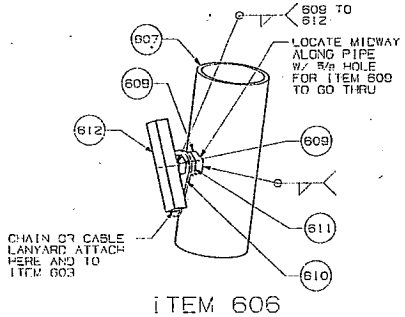


ITEM 606

## BILL OF MATERIALS

| ITEM | QTY | DESCRIPTION |
|---|---|---|
| 601 | 1 | WELDED ASSEMBLY CONSISTS OF ITEMS 602 606 |
| 602 | 1 | 3/4 X 8 X 28 LG. HR STEEL PLATE. ASTM A36 |
| 603 | 2 | 3/4 X 6 1/2 X 13 LG. HR STEEL PLATE. ASTM A36 |
| 604 | 1 | 1 1/4 X 13 X 16 LG. HR STEEL PLATE. ASTM A36 |
| 605 | 1 | SHIM PLATE, THK. DETERMINED AT INSTALLATION. 8 W X 16 LG. HR STEEL PLATE. ASTM A36 |
| 606 | 1 | ASSEMBLY CONSIST OF ITEMS 607 TO 612 |
| 607 | 1 | 2 DIA X 10 LG SCHD 40 STEEL PIPE |
| 608 | 2 | 1/2 SAE NUT |
| 609 | 1 | 1/2 X 1 1/2 SAE BOLT |
| 610 | 1 | 1/2 LOBED RETAINING WASHER McMASTER-CARR P/N 95985A190 |
| 611 | 1 | 1/2 SAE NYLON LOCK NUT |
| 612 | 1 | 1/2 X 3 LG STEEL SQUARE BAR |

NOTES:

1. ALL WELDS, ELECTRICAL AND PAINT WILL BE IN COMPLIANCE WITH CALTRANS EQUIPMENT QUALITY STANDARDS. GO TO www.dot.ca.gov/hq/eqsc TO VIEW EQUIPMENT QUALITY STANDARDS.
2. ALL JOINTS TO BE WELDED CONTINUOUS UNLESS OTHERWISE SPECIFIED. SIZE OF ALL WELDS TO BE AT LEAST THE THICKNESS OF THE THINNER OF THE ADJACENT METALS.
3. THE WORK SHALL BE POSITIONED FOR FLAT WELDING WHENEVER POSSIBLE. USE PROPER PROCEDURES AND SEQUENCE OF WELDING TO AVOID NEEDLESS DISTORTION AND MINIMIZE SHRINKAGE STRESSES OF THE ASSEMBLY.
4. ALL STEEL TO BE ASTM A36 OR BETTER.
5. DEBURR AND GRIND ALL SHARP EDGES AND CORNERS.

# PE 32-12-5461

©2000 California Department of Transportation
All Rights Reserved
US Patent # 7,410,321 B1

| REV | DESCRIPTION | BY |
|---|---|---|
| G | 06/06 NEW PATENT NUMBER | JDR |
| E | 06/06 ITEMS 602 & 605 CHG'D HOLES TO 1 1/16 | DOWNIN |
| B | 9/05 ADDED ITEM 606 6 3/4 WAS 6 1/4 | RAMOS |
| A | 12/02 SHORTENED ITEM 404 FROM 16 INCHES BOLT SIZE INCREASED FROM 5/8 ON 402 & 403 | MATSUO |

NEXT ASSEMBLY: X

TOLERANCE UNLESS OTHERWISE SPECIFIED
DECIMAL ± .005
FRACTIONAL ± 1/64
ANGULAR ± 1°
DRILLED HOLES ± 1/64
REMOVED HOLES ± 1/64

STATE OF CALIFORNIA
DEPARTMENT OF TRANSPORTATION
DIVISION OF EQUIPMENT

BARRIER TRAILER
FORWARD BEARING PLATE

| | | | |
|---|---|---|---|
| SCALE 1/2 | DATE 4 Apr 02 | 1 61500 4 H08 |
| DRAWN J Payne | DESIGNED Matsuo | |
| CHECKED | GROUP 4 OF 11 | SHEET 5 OF 9 SHEETS |

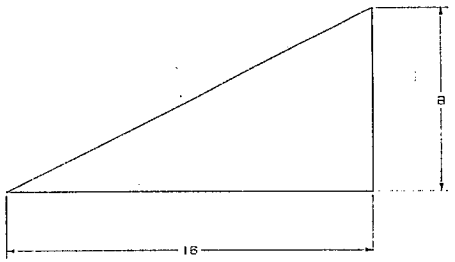


ITEM 703

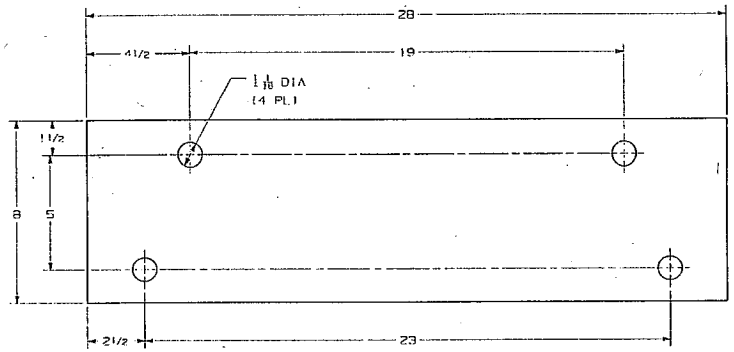


ITEM 702 AND 705

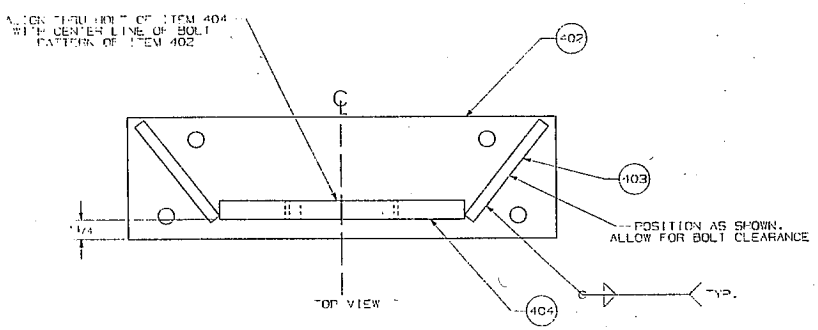


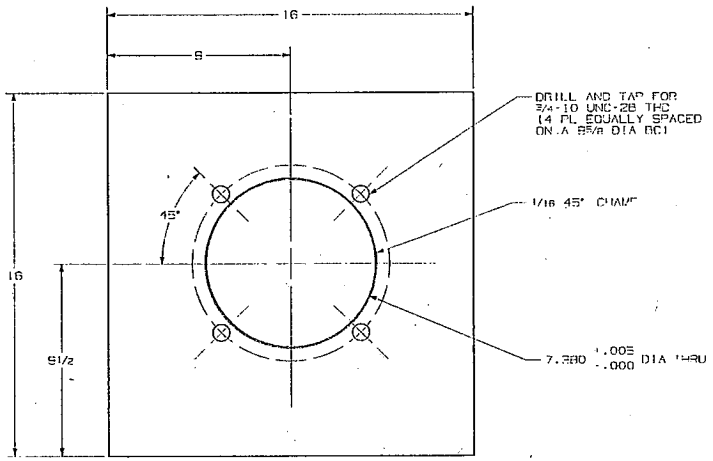


ITEM 704

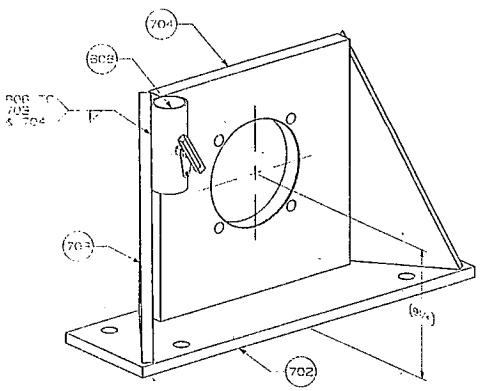


ITEM 701

## BILL OF MATERIALS

| ITEM | QTY | DESCRIPTION |
|---|---|---|
| 701 | 1 | WELDED ASSEMBLY CONSISTS OF ITEMS 702 705 AND 806 |
| 702 | 1 | 3/4 X 8 X 28 LG. HR STEEL PLATE. ASTM A36 |
| 703 | 2 | 3/4 X 8 X 16 LG. HR STEEL PLATE. ASTM A36 |
| 704 | 1 | 1 1/4 X 16 X 16 LG. HR STEEL PLATE. ASTM A36 |
| 705 | 1 | SHIM PLATE, THK. DETERMINED AT INSTALLATION. 18 W X 16 LG. HR STEEL PLATE. ASTM A36 |

NOTES:

1. ALL WELDS, ELECTRICAL AND PAINT WILL BE IN COMPLIANCE WITH CALTRANS EQUIPMENT QUALITY STANDARDS. GO TO www.dot.ca.gov/hq/eqsc TO VIEW EQUIPMENT QUALITY STANDARDS.
2. ALL JOINTS TO BE WELDED CONTINUOUS UNLESS OTHERWISE SPECIFIED. SIZE OF ALL WELDS TO BE AT LEAST THE THICKNESS OF THE THINNER OF THE ADJACENT METALS.
3. THE WORK SHALL BE POSITIONED FOR FLAT WELDING WHENEVER POSSIBLE. USE PROPER PROCEDURES AND SEQUENCE OF WELDING TO AVOID NEEDLESS DISTORTION AND MINIMIZE SHRINKAGE STRESSES OF THE ASSEMBLY.
4. ALL STEEL TO BE ASTM A36 OR BETTER.
5. DEBURR AND GRIND ALL SHARP EDGES AND CORNERS.

PE 32-12-5461

©2009 California Department of Transportation
All Rights Reserved
US Patent # 7,[illegible]

| REV | DESCRIPTION | BY |
|---|---|---|
| G | 09/06 NEW PATENT NUMBER | JDR |
| E | 5/08 ITEMS 702 & 705 CHG'D HOLES 10 1 1/16 | DOWNIN |
| B | 9/05 WAS H34 ADDED ITEM 606 8 1/2 WAS 9 1/4 | RAMOS |
| A | 12/02 ON ITEMS 402 AND 405 INCREASE BOLT HOLE SIZES FROM 5/8" | MATSUO |

NEXT ASSEMBLY: X

STATE OF CALIFORNIA
DEPARTMENT OF TRANSPORTATION
DIVISION OF EQUIPMENT

BARRIER TRAILER
REAR BEARING PLATE

| | | | |
|---|---|---|---|
| SCALE 1/2 | DATE 4 Apr 02 | 1-61500-4-H67 |
| DRAWN J Payne | DESIGNED Matsuo | |
| CHECKED | GROUP 4 OF 11 | SHEET 2 OF 8 SHEETS |

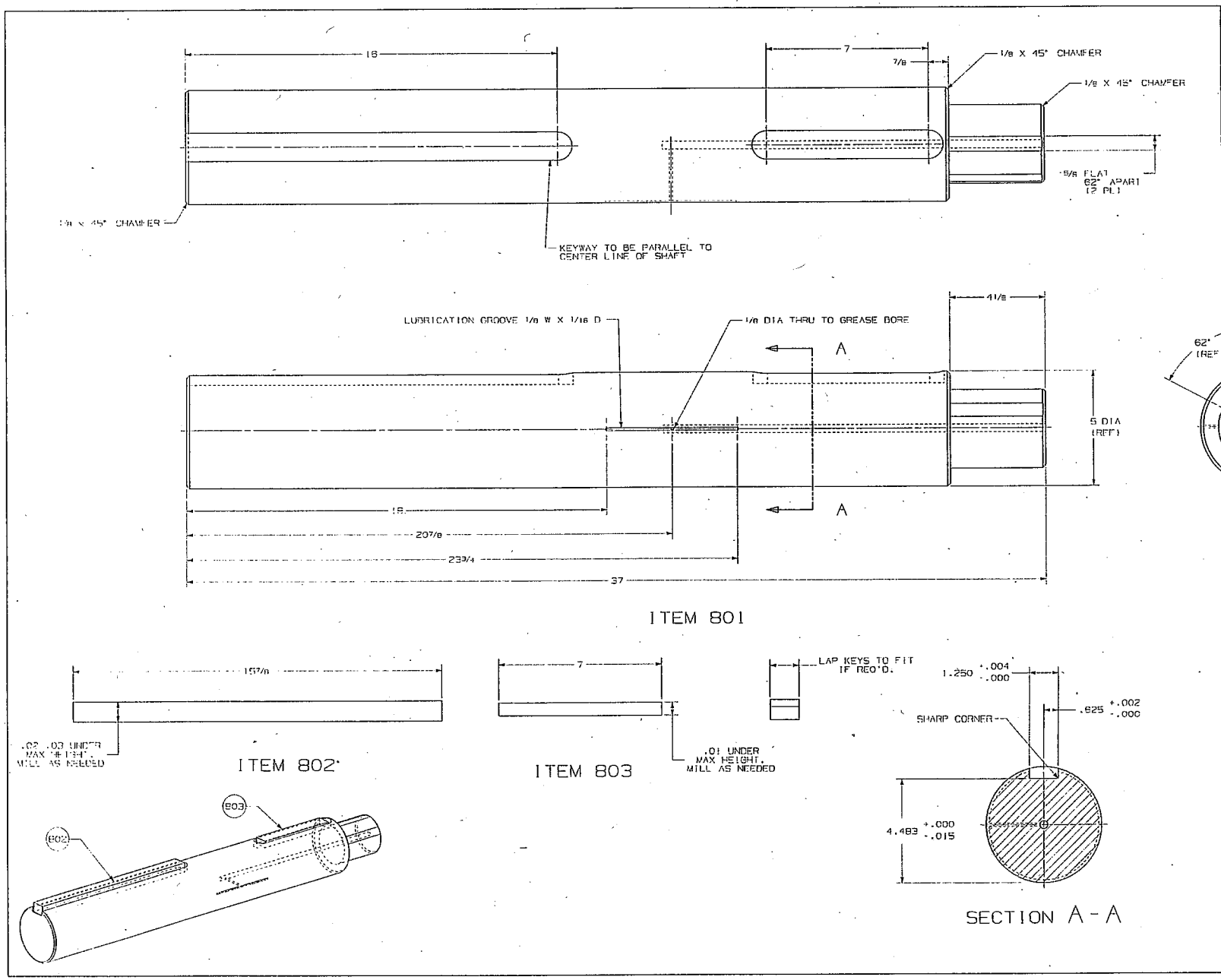


## BILL OF MATERIALS

| ITEM | QTY | DESCRIPTION |
|---|---|---|
| 801 | 1 | PRECISION GROUND BAR, 5 in DIA, 4140 ALLOY STEEL, TND CUD AND POL. (ASTM A434) |
| 802 | 1 | KEY STOCK, OVER SIZE, STEEL (C 1018), 1 1/4 X 7/8 X 15 7/8" LG. FOR ACTUATOR |
| 803 | 1 | KEY STOCK, OVER SIZE, STEEL (C 1018), 1 1/4 X 7/8 X 7" LG. FOR DRIVE ARM. SUPPLIED WITH BUSHING DWG 1-61500-5-ARI REV 1.2 |
| 804 | 1 | GREASE FITTING (ZERK FITTING) STRIGHT STYLE, 1/8 NPT MALE, STEEL |

NOTES:
1. ALL WELDS, ELECTRICAL AND PAINT WILL BE IN COMPLIANCE WITH CALTRANS EQUIPMENT QUALITY STANDARDS. GO TO www.dot.ca.gov/hq/cqsc TO VIEW EQUIPMENT QUALITY STANDARDS.
2. REMOVE ALL BURRS AND SHARP EDGES.

# PE 32-12-5461

©2000 California Department of Transportation
All Rights Reserved
US Patent # 7,410,321 B1

| REV | DESCRIPTION | BY |
|---|---|---|
| G | 09/06 NEW PATENT NUMBER | JDR |
| E | 04/07 REMOVED KEYWAY @ IDLER | DOWNEY |
| B | 09/05 WAS SHEET 5 | JDR |

NEXT ASSEMBLY: X

STATE OF CALIFORNIA
DEPARTMENT OF TRANSPORTATION
DIVISION OF EQUIPMENT

BARRIER TRAILER
SHAFT, ACTUATOR

SCALE: X | DATE: 30 Apr 02 | 1-61500 4-H09
DRAWN: J Payne | DESIGNED: Matsuo
CHECKED: | GROUP 4 OF 11

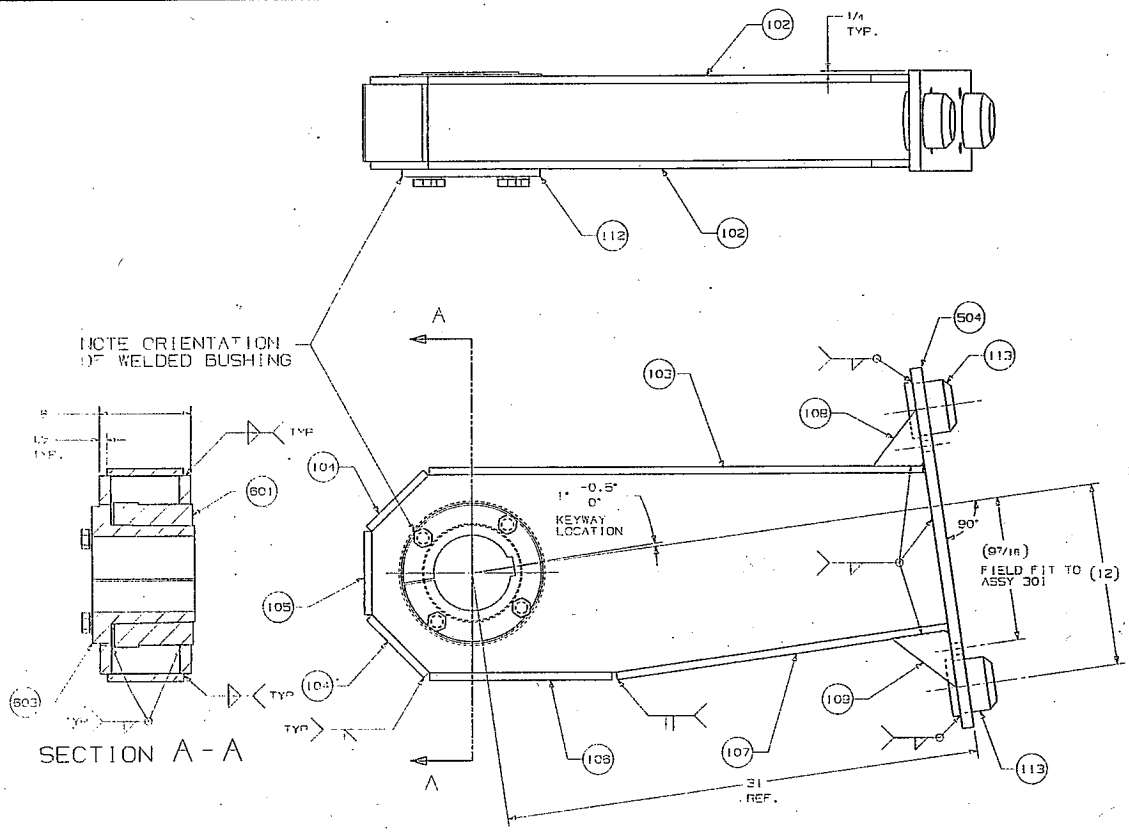


SECTION A-A

ASSEMBLY 101
DRIVE ARM

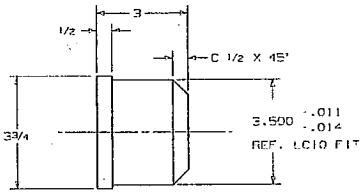


ITEM 113
SCALE: 1/2

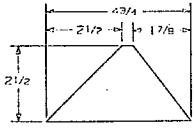


ITEM 109
SCALE: 1/2

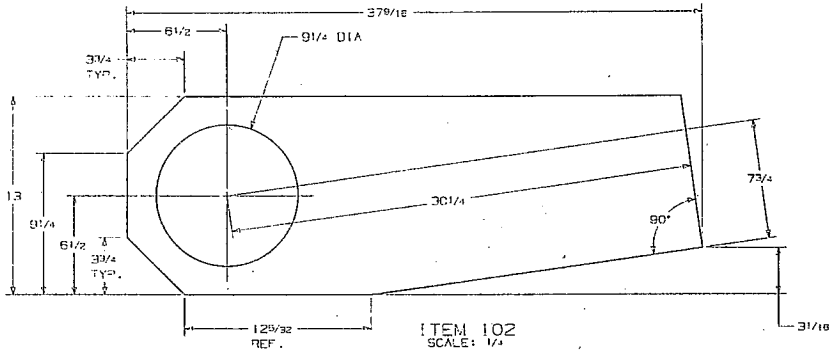


ITEM 102
SCALE: 1/4

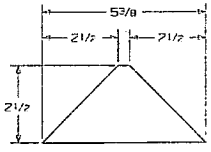


ITEM 109
SCALE: 1/2

## BILL OF MATERIALS

| ITEM | QTY | DESCRIPTION |
|---|---|---|
| 101 | 2 | EACH WELDED ASSY CONSISTS OF ITEMS 102-113, 504, 601 & 603 |
| 102 | 2 | 3/4 x 13 x 37 9/16 LG. HR STEEL PLATE, ASTM A36 |
| 103 | 1 | 1/2 x 5 x 32 1/4 LG. HR STEEL PLATE OR STRIP, ASTM A36 |
| 104 | 2 | 1/2 x 5 x 5 1/4 LG. HR STEEL PLATE OR STRIP, ASTM A36 |
| 105 | 1 | 1/2 x 5 x 5 1/2 LG. HR STEEL PLATE OR STRIP, ASTM A36 |
| 106 | 1 | 1/2 x 5 x 11 7/8 LG. HR STEEL PLATE OR STRIP, ASTM A36 |
| 107 | 1 | 1/2 x 5 x 22 LG. HR STEEL PLATE OR STRIP, ASTM A36 |
| 108 | 2 | 1/2 x 2 1/2 x 43/4 LG. HR STEEL STRIP, ASTM A36 |
| 109 | 2 | 1/2 x 2 1/2 x 5 3/8 LG. HR STEEL STRIP, ASTM A36 |
| | | |
| | | |
| | | |
| 113 | 2 | 3/4 (MIN.) DIA x 3 LG. ROUND STOCK |

NOTES:

1. ALL WELDS, ELECTRICAL AND PAINT WILL BE IN COMPLIANCE WITH CALTRANS EQUIPMENT QUALITY STANDARDS. GO TO www.dot.ca.gov/hq/eqmc TO VIEW EQUIPMENT QUALITY STANDARDS.
2. ALL JOINTS TO BE WELDED CONTINUOUS UNLESS OTHERWISE SPECIFIED. SIZE OF ALL WELDS TO BE AT LEAST THE THICKNESS OF THE THINNER OF THE ADJACENT METALS. WELDS TO BE UNIFORM AND NEAT IN APPEARANCE.
3. THE WORK SHALL BE POSITIONED FOR FLAT WELDING WHENEVER POSSIBLE. USE PROPER PROCEDURES AND SEQUENCE OF WELDING TO AVOID NEEDLESS DISTORTION AND MINIMIZE SHRINKAGE STRESSES OF THE ASSEMBLY.
4. ALL STEEL NOT SPECIFIED SHALL BE ASTM A36 OR BETTER.
5. REMOVE ALL BURRS AND SHARP EDGES.

# PE 32-12-5461

©2008 California Department of Transportation
All Rights Reserved
US Patent # 5,410,281 B1

| REV | DESCRIPTION | BY |
|---|---|---|
| G | 08/08 NEW PATENT NUMBER | JOR |
| E | 08/08 UPDATED CALLOUT FOR ITEMS 601, 603 MOVED KEYWAY TO 1° OFF CA. | RAMOS |
| C | 08/07 CHANGED ITEM 110 TO 504 | DESIGN |
| B | 11/05 NEW BEAM DESIGN, ADDED SHEAR PINS. ARMS ARE NOT MIRROR IMAGES | MATSUO |

| NEXT ASSEMBLY | STATE OF CALIFORNIA DEPARTMENT OF TRANSPORTATION DIVISION OF EQUIPMENT | |
|---|---|---|
| | BARRIER TRAILER DRIVE ARM | |
| | SCALE AS NOTED | DATE 10/03/05 |
| | DRAWN MATSUO | DESIGNED MATSUO |
| | CHECKED | QUALITY ASSURANCE |
| | | 1-61500 S ARI |

## BILL OF MATERIALS

| ITEM | QTY | DESCRIPTION |
|---|---|---|
| 201 | 2 | EACH WELDED ASSY C/O ITEMS 102 TO 8, 113, 504, 601, 602 |
| | | |
| | | |

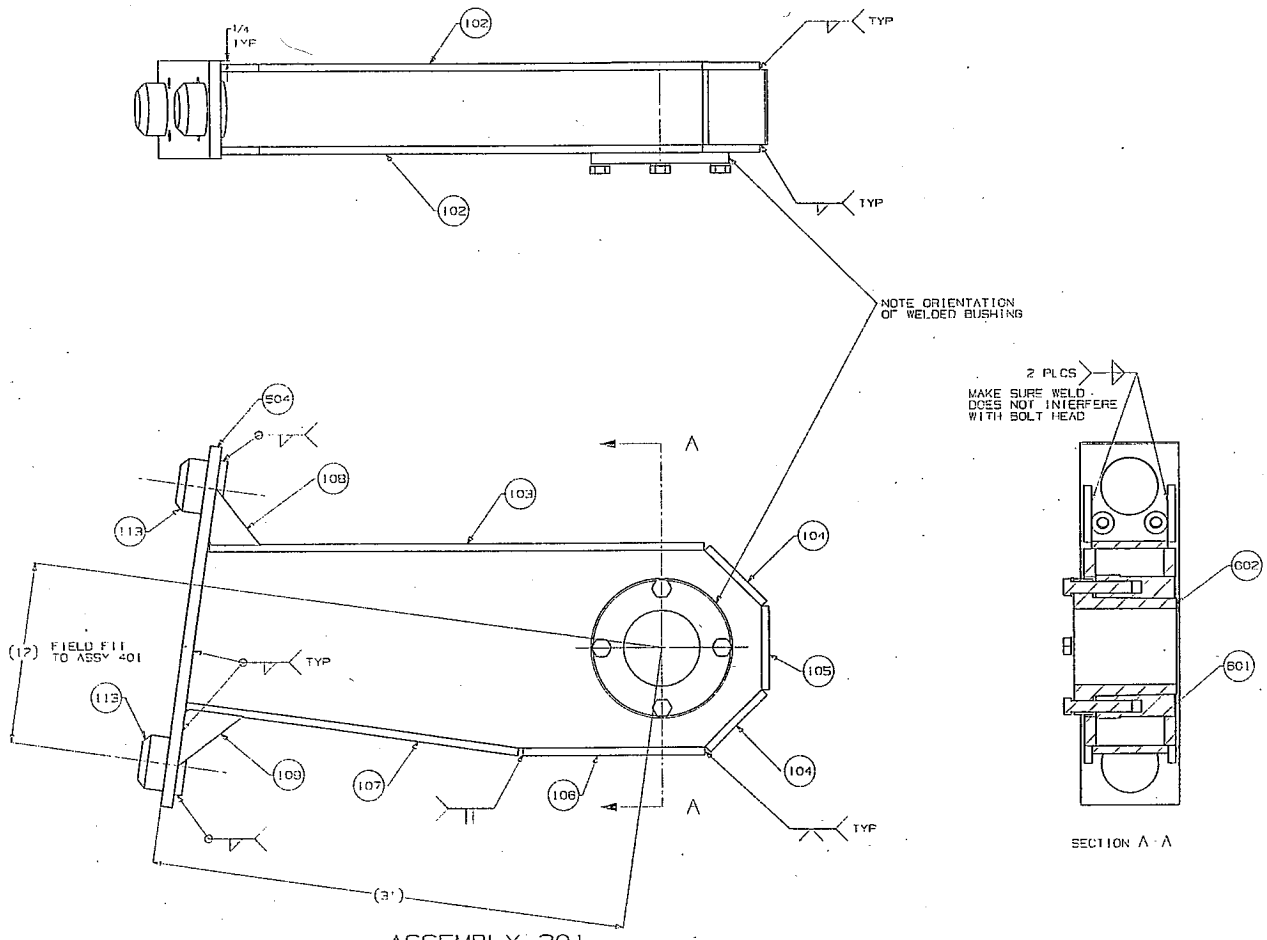


ASSEMBLY 201

IDLER ARM

SECTION A-A

NOTES:

1. ALL WELDS, ELECTRICAL AND PAINT WILL BE IN COMPLIANCE WITH CALTRANS EQUIPMENT QUALITY STANDARDS. GO TO www.dot.ca.gov/hq/eqsc TO VIEW EQUIPMENT QUALITY STANDARDS.
2. ALL JOINTS TO BE WELDED CONTINUOUS UNLESS OTHERWISE SPECIFIED. SIZE OF ALL WELDS TO BE AT LEAST THE THICKNESS OF THE THINNER OF THE ADJACENT METALS. WELDS TO BE UNIFORM AND NEAT IN APPEARANCE.
3. THE WORK SHALL BE POSITIONED FOR FLAT WELDING WHENEVER POSSIBLE. USE PROPER PROCEDURES AND SEQUENCE OF WELDING TO AVOID NEEDLESS DISTORTION AND MINIMIZE SHRINKAGE STRESSES OF THE ASSEMBLY.
4. ALL STEEL NOT SPECIFIED SHALL BE A36 OR BETTER.
5. REMOVE ALL BURRS AND SHARP EDGES.

PE 32-12-5461

©2004 California Department of Transportation
All Rights Reserved
US Patent # 7,410,181 B1

| REV | DATE | DESCRIPTION | BY |
|---|---|---|---|
| G | 09/08 | NEW PATENT NUMBER | JOR |
| E | 08/08 | REDESIGNED PAGE LAYOUT AND ITEMS 202, 203, 504 | RAMOS |
| C | 09/07 | CHANGED ITEM 210 TO 504 | DEVRIES |
| B | 11/05 | NEW SEAM DESIGN, ADDED SHEAR PINS, ARMS ARE NOT MIRROR IMAGES | MATSUO |

| NEXT ASSEMBLY | STATE OF CALIFORNIA DEPARTMENT OF TRANSPORTATION DIVISION OF EQUIPMENT | |
|---|---|---|
| | BARRIER TRAILER IDLER ARM | |
| | SCALE AS NOTED | DATE 10/03/05 |
| | DRAWN MATSUO | DESIGNED MATSUO |
| | CHECKED | SHEET 5 OF 11 |

I 81500 S A02

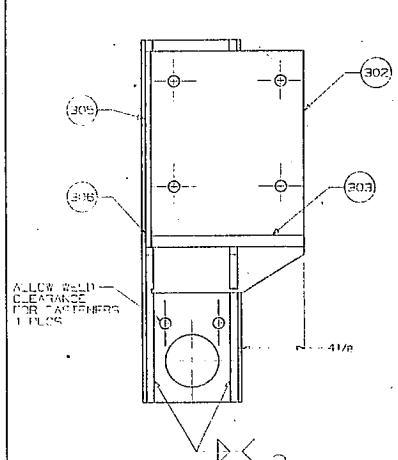


BACK VIEW

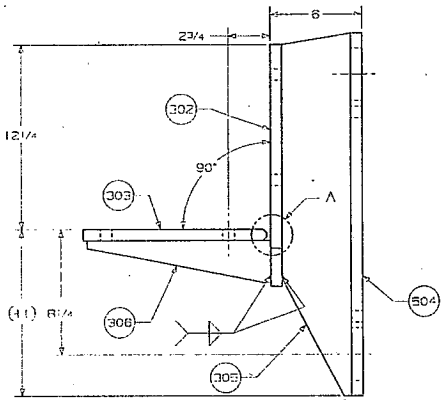


SIDE VIEW

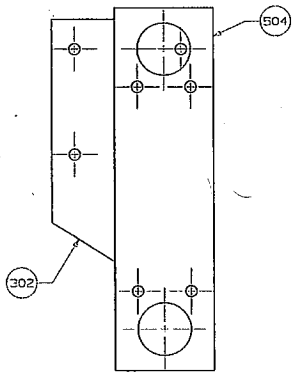


FRONT VIEW

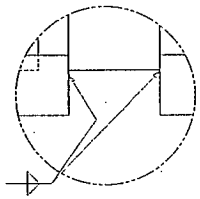

DETAIL H

SCALE 2:1

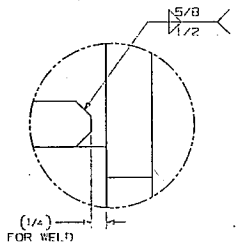


DETAIL A

SCALE 1:1

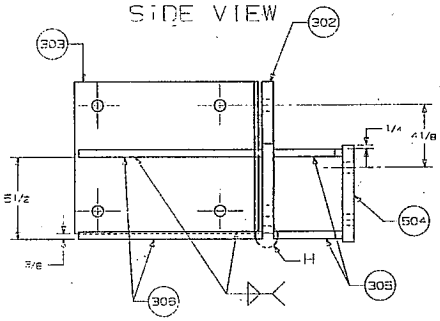


BOTTOM VIEW
ASSEMBLY 301

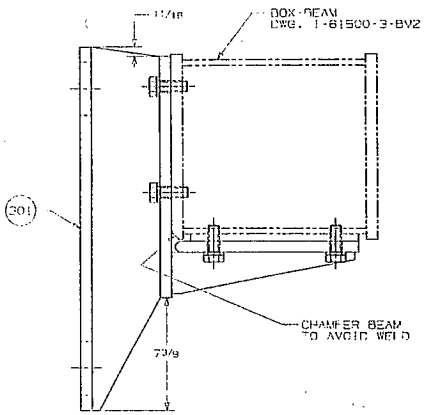


ASSEMBLED VIEW

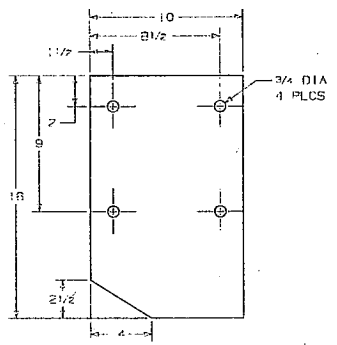


ITEM 302

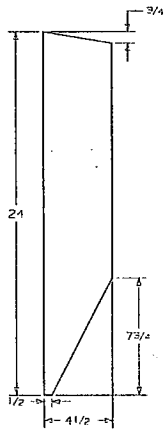


ITEM 305

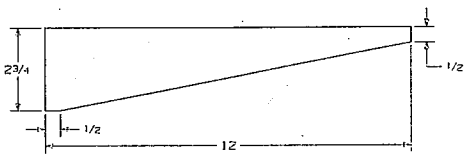


ITEM 306

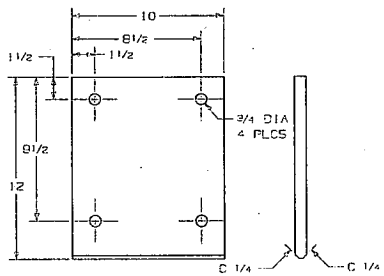


ITEM 303

## BILL OF MATERIALS

| ITEM | QTY | DESCRIPTION |
|---|---|---|
| 301 | 2 | EACH WLD'D ASSY C/O ITEMS 302 306 |
| 302 | 1 | 3/4 x 10 x 18 STL A514 PLATE |
| 303 | 1 | 3/4 x 10 x 12 STL A514 PLATE |
| | | |
| 305 | 2 | 1/2 x 4 1/2 x 24 STL A514 PLATE |
| 306 | 2 | 1/2 x 2 3/4 x 12 STL A514 PLATE |

NOTES:
1. ALL WELDS, ELECTRICAL AND PAINT WILL BE IN COMPLIANCE WITH CALTRANS EQUIPMENT QUALITY STANDARDS. GO TO www.dot.ca.gov/hq/esc TO VIEW EQUIPMENT QUALITY STANDARDS.
2. ALL JOINTS TO BE WELDED CONTINUOUS UNLESS OTHERWISE SPECIFIED. SIZE OF ALL WELDS TO BE AT LEAST THE THICKNESS OF THE THINNER OF THE ADJACENT METALS. WELDS TO BE UNIFORM AND NEAT IN APPEARANCE.
3. THE WORK SHALL BE POSITIONED FOR FLAT WELDING WHENEVER POSSIBLE. USE PROPER PROCEDURES AND SEQUENCE OF WELDING TO AVOID NEEDLESS DISTORTION AND MINIMIZE SHRINKAGE STRESSES OF THE ASSEMBLY.
4. ALL STEEL NOT SPECIFIED SHALL BE ASTM A36 OR BETTER.
5. REMOVE ALL BURRS AND SHARP EDGES.

PE 32-12-5461

©2008 California Department of Transportation
All Rights Reserved
US Patents # 7,410,201 B1

| REV | DESCRIPTION | BY |
|---|---|---|
| G | 09/08 NEW PATENT NUMBER | JDR |
| E | 06/08 ALL A514 WAS HRS | RAMOS |
| C | 09/07 DRAWN AS ASSY CHG'D REV 504 | DEWEY |
| B | 10/05 REDESIGN FOR NEW BEAM USE ONE MOUNT INSTEAD OF MIRROR IMAGE | MATSUO |

NEXT ASSEMBLY

STATE OF CALIFORNIA
DEPARTMENT OF TRANSPORTATION
DIVISION OF EQUIPMENT

BARRIER TRAILER
BOX BEAM MOUNT BRACKET

| | | | |
|---|---|---|---|
| SCALE | 1/2 | DATE | 04/09/02 |
| DRAWN | DOAKLIN | D.SIMONSEN-ZELEB | J 81500 S AND |
| CHECKED | | SHEET 1 OF 1 | |

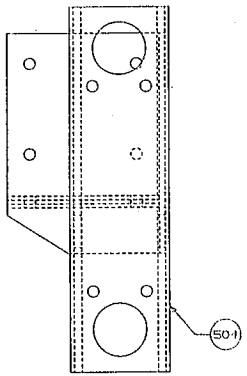


BACK VIEW

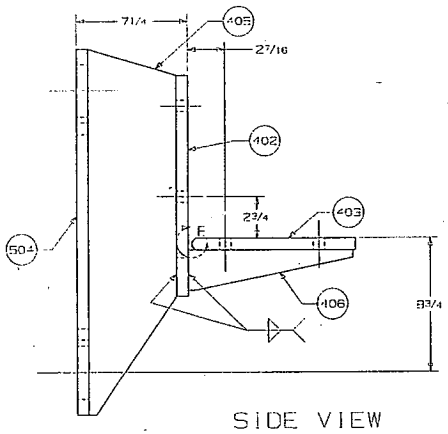


SIDE VIEW

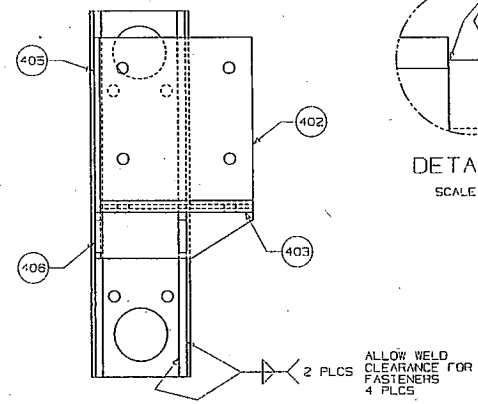


FRONT VIEW

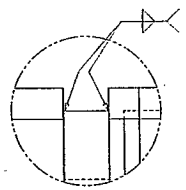

DETAIL F

SCALE: 1/1

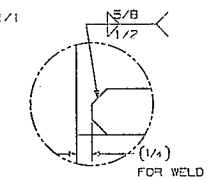


DETAIL E

SCALE: 1/1

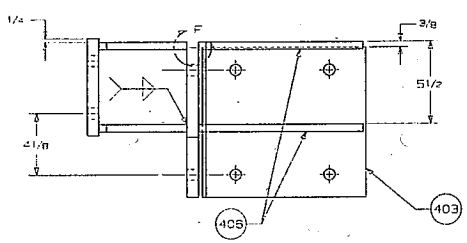


BOTTOM VIEW
ASSEMBLY 401

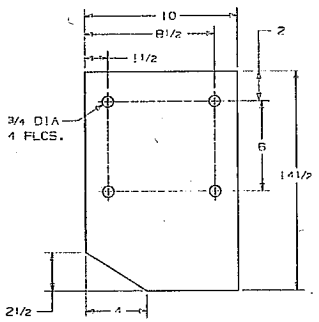


ITEM 402

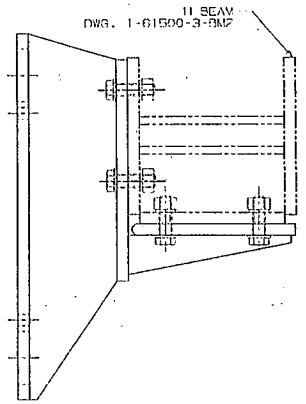


ASSEMBLED VIEW

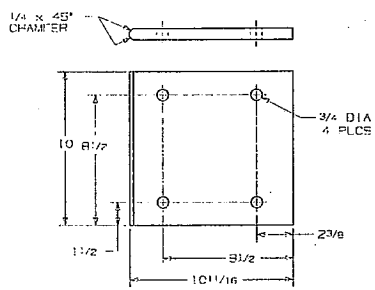


ITEM 403

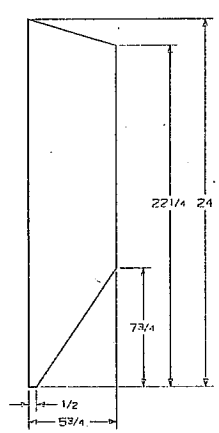


ITEM 405

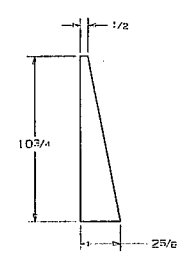


ITEM 406

## BILL OF MATERIALS

| ITEM | QTY | DESCRIPTION |
|---|---|---|
| 401 | 2 | EACH WLD'D ASS'Y C/O ITEMS 402 406 |
| 402 | 1 | 3/4 x 10 x 14 1/2 LG A514 PLATE |
| 403 | 1 | 3/4 x 10 x 10 11/16 LG A514 PLATE |
| | | |
| 405 | 2 | 1/2 x 5 3/4 x 24 LG A514 PLATE |
| 406 | 2 | 1/2 x 2 5/8 x 10 3/4 LG A514 PLATE |

NOTES:

1. ALL WELDS, ELECTRICAL AND PAINT WILL BE IN COMPLIANCE WITH CALTRANS EQUIPMENT QUALITY STANDARDS. GO TO www.dot.ca.gov/hq/equip TO VIEW EQUIPMENT QUALITY STANDARDS.
2. ALL JOINTS TO BE WELDED CONTINUOUS UNLESS OTHERWISE SPECIFIED. SIZE OF ALL WELDS TO BE AT LEAST THE THICKNESS OF THE THINNER OF THE ADJACENT METALS. WELDS TO BE UNIFORM AND NEAT IN APPEARANCE.
3. THE WORK SHALL BE POSITIONED FOR FLAT WELDING WHENEVER POSSIBLE. USE PROPER PROCEDURES AND SEQUENCE OF WELDING TO AVOID NEEDLESS DISTORTION AND MINIMIZE SHRINKAGE STRESSES OF THE ASSEMBLY.
4. ALL STEEL NOT SPECIFIED SHALL BE ASTM A36 OR BETTER.
5. REMOVE ALL BURRS AND SHARP EDGES.

PE 32-12-5461

©2008 California Department of Transportation
All Rights Reserved
US Patent # 7,410,321 B1

| REV | DESCRIPTION | BY |
|---|---|---|
| G | 09/08 NEW PATENT NUMBER | JDR |
| E | 06/08 ALL A514 PLATE WAS HRS | RAMOS |
| C | 09/07 DRAWN AS ASSEMBLY CHANGED 504 | DOWNIN |
| B | 10/05 REDESIGN FOR NEW BEAM USE ONE MOUNT INSTEAD OF MIRROR IMAGES | MATSUO |

NEXT ASSEMBLY

STATE OF CALIFORNIA
DEPARTMENT OF TRANSPORTATION
DIVISION OF EQUIPMENT

BARRIER TRAILER
H BEAM MOUNT BRACKET

| | | | |
|---|---|---|---|
| SCALE 1/4 | DATE 04/10/02 | 1-61500-S AR4 |
| DRAWN DOWNIN | DESIGNED SHEFLER | |
| CHECKED | GROUP 5 OF 11 | SHEET 4 OF 8 SHEETS |

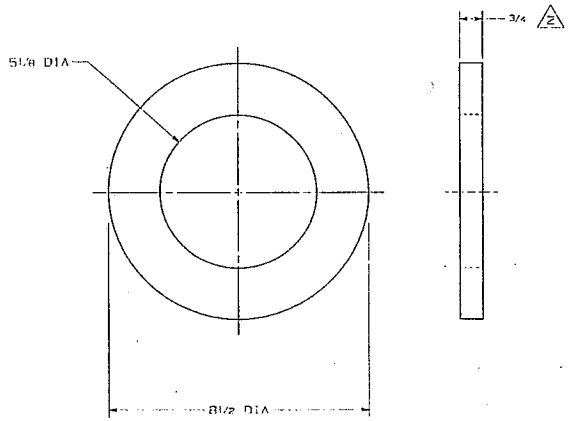


ITEM 501

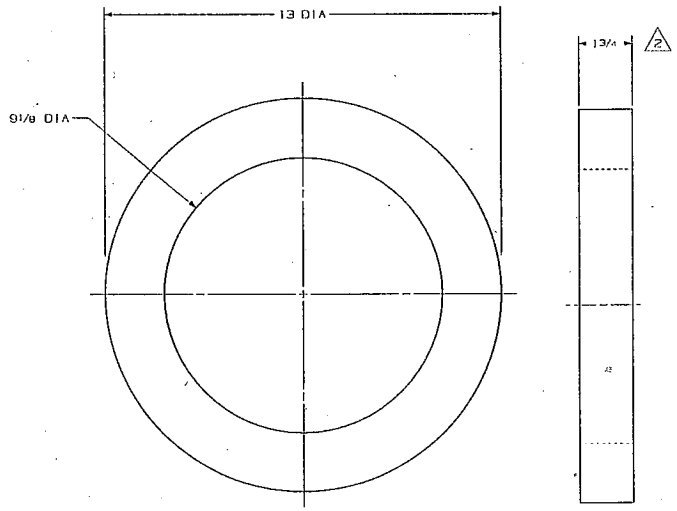


ITEM 502

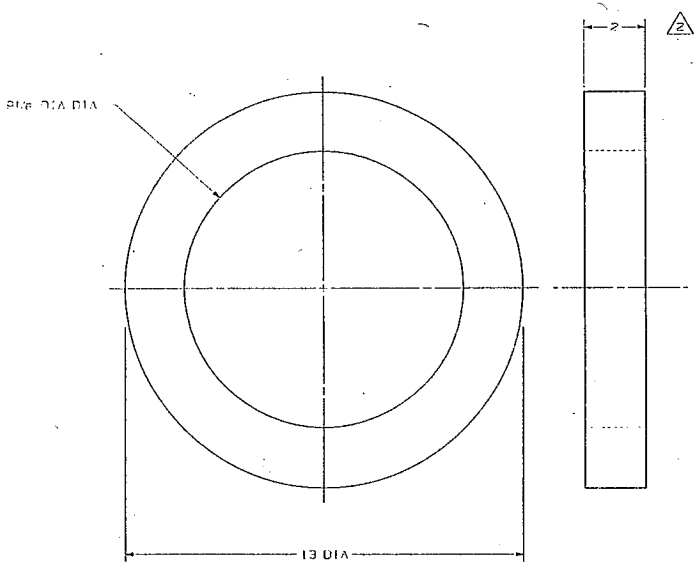


ITEM 503

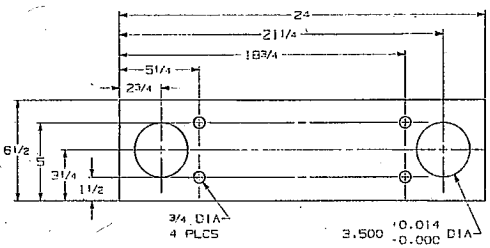


ITEM 504

## BILL OF MATERIALS

| | ITEM | QTY | DESCRIPTION |
|---|---|---|---|
| (2 TOTAL) | 501 | 1 | 3/4 THK X 8 1/2 DIA. UHMW POLYETHYLENE, COLOR BLACK. |
| (2 TOTAL) | 502 | 1 | 1 3/4 THK X 13 DIA. UHMW POLYETHYLENE, COLOR BLACK. |
| (2 TOTAL) | 503 | 1 | 1 3/4 THK X 13 DIA. UHMW POLYETHYLENE, COLOR BLACK. |
| (8 TOTAL) | 504 | 1 | 3/4 x 8 1/2 x 24 LG. AR514 PLATE SEE ITEMS 110,210,304,404, IN DWGS: 1-61500-5-AR-01 THRU 1-61500-5-AR-04 |

NOTES:
1. ALL WELDS, ELECTRICAL AND PAINT WILL BE IN COMPLIANCE WITH CALTRANS EQUIPMENT QUALITY STANDARDS. GO TO www.dot.ca.gov/hq/esc TO VIEW EQUIPMENT QUALITY STANDARDS.

2. ADJUST SPACER THICKNESS IF REQUIRED

# PE 32-12-5461

©2009 California Department of Transportation
All Rights Reserved
US Patent # 7,410,321 B1

| REV | DESCRIPTION | BY |
|---|---|---|
| G | 05/09 NEW PATENT NUMBER | JJR |
| E | 06/06 ITEM 504 WAS 23 NOW 24 LG | RAMOS |
| B | 11/05 REDESIGN FOR NEW BEAM. ADDED SHEAR PINS IN ITEM 504 | MATSUO |

NEXT ASSEMBLY

STATE OF CALIFORNIA
DEPARTMENT OF TRANSPORTATION
DIVISION OF EQUIPMENT

BARRIER TRAILER
ARM SPACERS

| | | |
|---|---|---|
| STATE NONE | DATE 5 May 02 | 1-61500-5-AR5 |
| DRAWN J Payne | DESIGNED J Matsuo | |
| CHECKED | SHEET 5 OF 11 | |

## BILL OF MATERIALS

| ITEM | QTY | DESCRIPTION |
|---|---|---|
| 601 | 1 | WELD-ON HUB REVERSE CD M-A MARTIN SPROCKET AND GEAR, INC |
| 602 | 1 | CD BUSHING PLAIN BORE NOT SPL T M S T MARTIN SPROCKET AND GEAR, INC |
| 603 | 1 | CD M STL WITH SHALLOW KEY MARTIN SPROCKET AND GEAR, INC |
| | | |
| | | |
| | | |

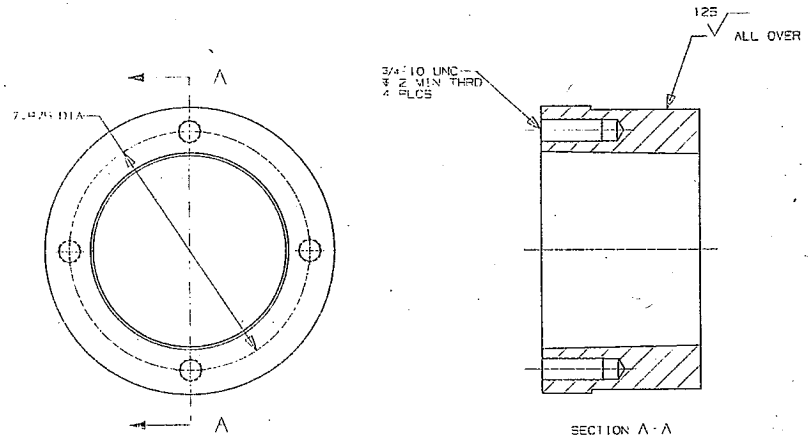


ITEM 601

NON STD HUB
DRILL AND TAP AS SHOWN

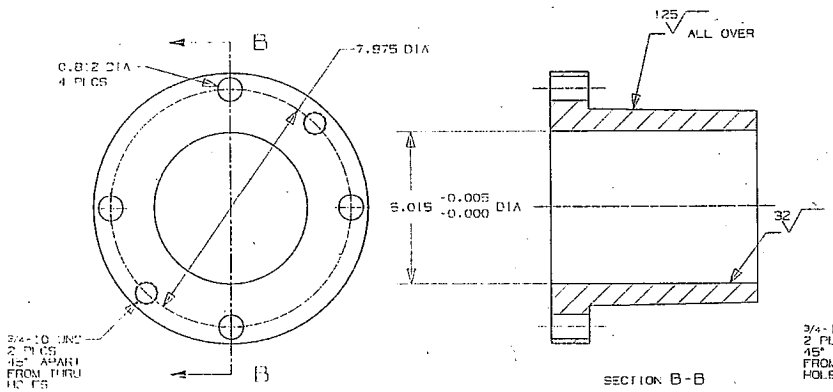


ITEM 602

NON STD BUSHING
DRILL AS SHOWN

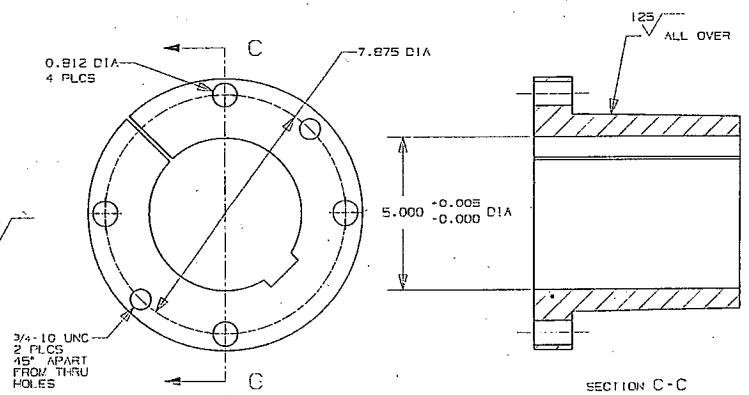


ITEM 603

NON STD BUSHING
DRILL AS SHOWN

NOTES:

1. ALL WELDS, ELECTRICAL AND PAINT WILL BE IN COMPLIANCE WITH CALTRANS EQUIPMENT QUALITY STANDARDS. GO TO www.dot.ca.gov/hq/eqpc TO VIEW EQUIPMENT QUALITY STANDARDS.
2. REMOVE ALL BURRS AND SHARP EDGES.

PE 32-12-5461

©2009 California Department of Transportation
All Rights Reserved
US Patent # 7,410,221 91

| REV | DESCRIPTION | BY |
|---|---|---|
| G | 08/08 NEW PATENT NUMBER | JOR |
| E | 06/08 NEW DWG SHEET | RAMOS |

NEXT ASSEMBLY

STATE OF CALIFORNIA
DEPARTMENT OF TRANSPORTATION
DIVISION OF EQUIPMENT

BARRIER TRAILER
ARM BUSHING AND WELD-ON HUB DETAIL

| | | | |
|---|---|---|---|
| SCALE 1/4 | DATE 06/19/09 | 1-61500-5 ARG |
| DRAWN RAMOS | DESIGNED WHETLER | |
| CHECKED | GROUP 5 OF 11 | SHEET 5 OF 5 SHEETS |

## BILL OF MATERIALS

| ITEM | QTY | DESCRIPTION |
|---|---|---|
| 301 | 2 | ASSEMBLY C/O ITEMS 302 310 |
| 302 | 1 | 1/2 x 11 x 13 LG HRS PLATE |
| 303 | 1 | 2 x 2 x 3/8 x 48 LG SIL ANGLE CUT AS SHOWN |
| 304 | 1 | 3/8 x 7 x 9 LG HRS PLATE |
| 305 | 2 | 3/8 x 17/8 x 3 LG HRS PLATE |
| 306 | 2 | 3/8 x 2 7/8 x 3 LG HRS PLATE |
| 307 | 1 | 3.00 x 1/2" x 2 3/4 - 3 STR TBE MECH TUBE ASTM A513 TYPE 5 |
| 308 | 1 | 2 x 2 LG HARDENED PRECISION 6 AXIS AISI 1566 STEEL |
| 309 | 1 | ~ALDEX MAXIBRAKE 2174 STROKE, 754 STR# #MAI7600 |
| 310 | 12 | STUD, 1/2-13 X 1 1/4" VpMASTER-CMR #81583A216 |

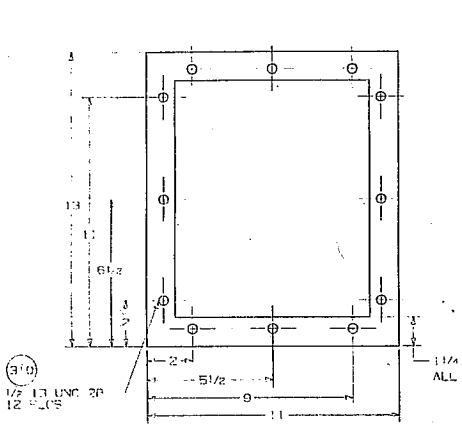


ITEM 302

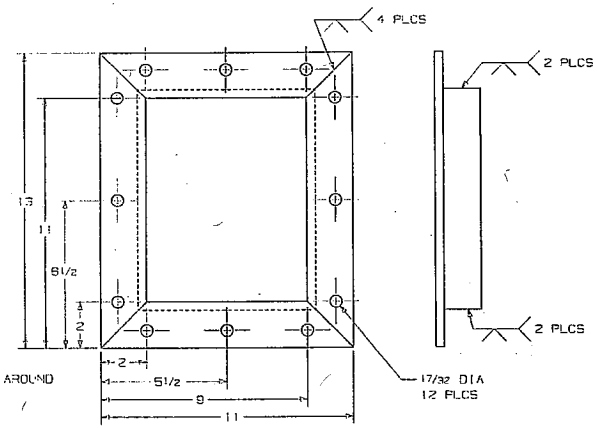


ITEM 303

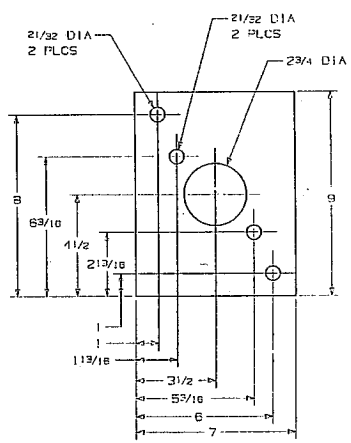


ITEM 304

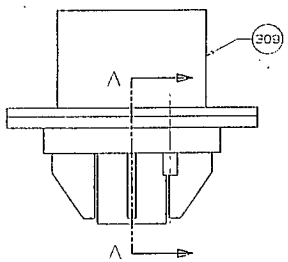


ITEM 301

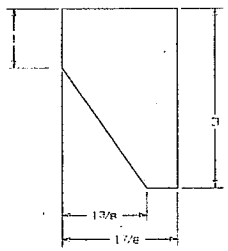


ITEM 305

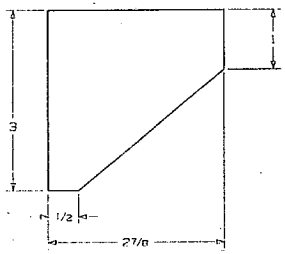


ITEM 306

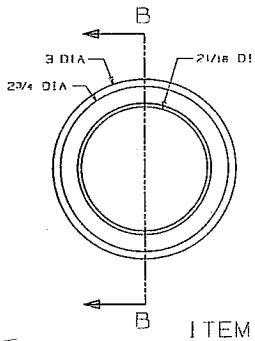


ITEM 307

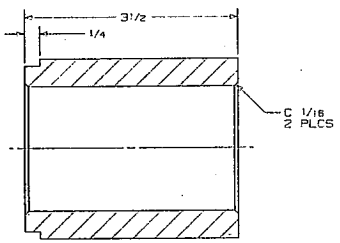


SECTION B-B

NOTES:
1. ALL WELDS, ELECTRICAL AND PAINT WILL BE IN COMPLIANCE WITH CALTRANS EQUIPMENT QUALITY STANDARDS. GO TO www.dot.ca.gov/hq/esse TO VIEW EQUIPMENT QUALITY STANDARDS.
2. ALL JOINTS TO BE WELDED CONTINUOUS UNLESS OTHERWISE SPECIFIED. SIZE OF ALL WELDS TO BE AT LEAST THE THICKNESS OF THE THINNER OF THE ADJACENT METALS. WELDS TO BE UNIFORM AND NEAT IN APPEARANCE.
3. THE WORK SHALL BE POSITIONED FOR FLAT WELDING WHENEVER POSSIBLE. USE PROPER PROCEDURES AND SEQUENCE OF WELDING TO AVOID NEEDLESS DISTORTION AND MINIMIZE SHRINKAGE STRESSES OF THE ASSEMBLY.
4. ALL STEEL NOT SPECIFIED SHALL BE ASTM A36 OR BETTER.
5. REMOVE ALL BURRS AND SHARP EDGES.
6. TRIM PUSHROD 1 INCH BEYOND JAM NUT

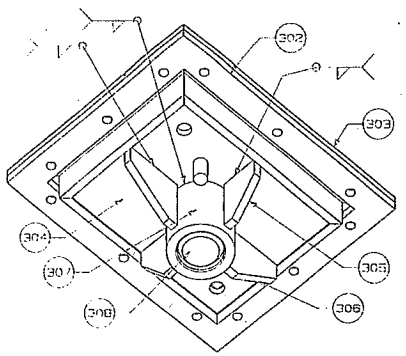


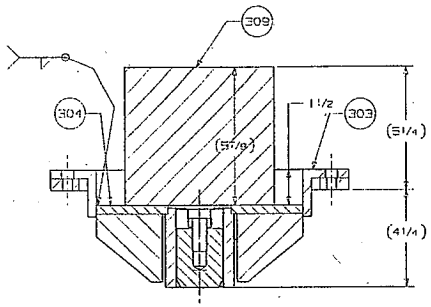


SECTION A-A

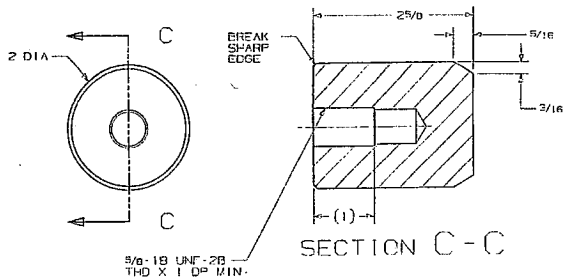


SECTION C-C

ITEM 308

# PE 32-12-5461

©2009 California Department of Transportation
All Rights Reserved
DO NOT COPY OR DISTRIBUTE

| REV | DESCRIPTION | BY |
|---|---|---|
| G | 08/08 NEW PATENT NUMBER | JDR |
| F | 08/07 308 WAS 2x2, 309 & 309 WAS 3/8 307 WAS 4, 309 WAS 3/8 HARDPRO INSTALL NOTED BY 10/7 | RAMOS |
| B | 08/05 ADDED SHEET LK3 OBSOLETED SHEETS LK1 & LK2 | JDR |

NEXT ASSEMBLY

STATE OF CALIFORNIA
DEPARTMENT OF TRANSPORTATION
DIVISION OF EQUIPMENT

BARRIER TRAILER
EXTENSION LOCK

| | | | |
|---|---|---|---|
| ISSUE AS NOTED | DATE 08/23/05 | 1 61500-6 LK3 | |
| DRAWN RAMOS | DESIGNED STILER | | |
| CHECKED | GROUP 6 OF 11 | SHEET LK3 OF 3 SHEETS | |

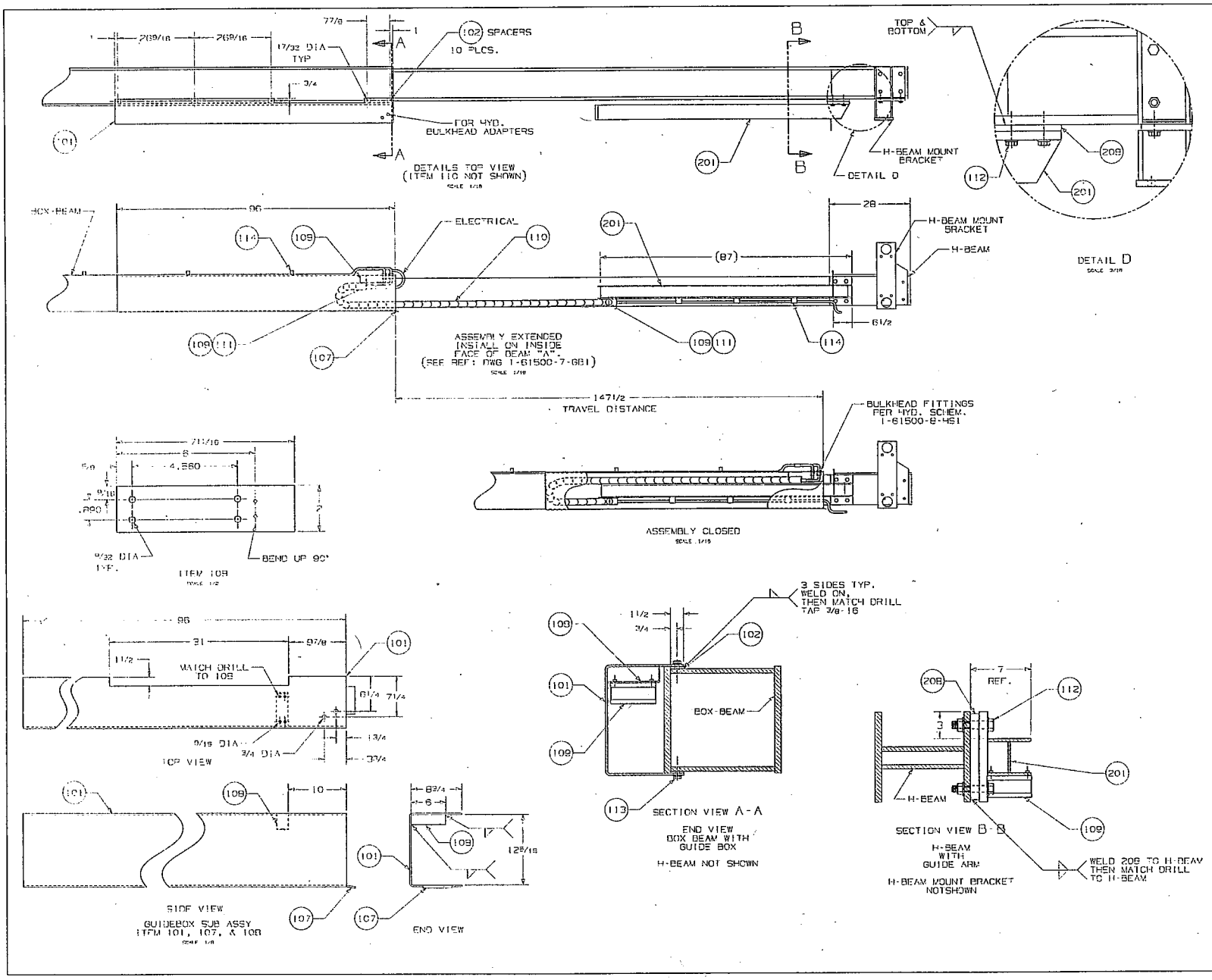


## BILL OF MATERIALS

| ITEM | QTY | DESCRIPTION |
|---|---|---|
| 101 | 1 | 1/4 x 29 3/4 x 96 LG. HR STEEL PLATE, ASTM A36 |
| 102 | 10 | 3/8 x 1 1/2 x 1 1/2 LG. HR STEEL FLATBAR, ASTM A36 |
| | | |
| | | |
| | | |
| | | |
| 107 | 3 | 1/4 x 1 1/2 x 5 LG. HR STEEL FLATBAR, ASTM A36 |
| 108 | 1 | 10GA x 2 x 7 11/16 LG. STEEL SHEET, ASTM A36 |
| 109 | 1 | MOUNTING BRACKET IGUS#: 3800 10-12P |
| 110 | 1 | CHAIN 8.36 FT LONG IGUS #: 38-10-100-0 |
| 111 | 2 | TIE WRAP PLATE IGUS#: 3100 ZB |
| 112 | 2 | 3/4 x 3 1/2 UNC GRADE 8 BOLT, LOCKWASHER, AND NUT |
| 113 | 10 | 1/2 x 1 UNC GRADE 8 BOLT AND SPLIT LOCK WASHER |
| 114 | AS REQ'D | HOSE CLAMPS |
| | | |

NOTES:

1. ALL WELDS, ELECTRICAL AND PAINT WILL BE IN COMPLIANCE WITH CALTRANS EQUIPMENT QUALITY STANDARDS. GO TO www.dot.ca.gov/hq/eqmc TO VIEW EQUIPMENT QUALITY STANDARDS.
2. ALL JOINTS TO BE WELDED CONTINUOUS UNLESS OTHERWISE SPECIFIED. SIZE OF ALL WELDS TO BE AT LEAST THE THICKNESS OF THE THINNER OF THE ADJACENT METALS. WELDS TO BE UNIFORM AND NEAT IN APPEARANCE.
3. THE WORK SHALL BE POSITIONED FOR FLAT WELDING WHENEVER POSSIBLE. USE PROPER PROCEDURES AND SEQUENCE OF WELDING TO AVOID NEEDLESS DISTORTION AND MINIMIZE SHRINKAGE STRESSES OF THE ASSEMBLY.
4. ALL STEEL NOT SPECIFIED SHALL BE ASTM A36 OR BETTER.
5. REMOVE ALL BURRS AND SHARP EDGES.
6. ALL 1/4 AND 5/16 BOLTS, WASHERS AND NUTS TO BE GRADE 5 MINIMUM, ZINC PLATED. ALL BOLTS, WASHERS AND NUTS ABOVE 5/16 SHALL BE GRADE 8, YELLOW CHROMATE PLATED. ALL BOLTS SHALL HAVE TWO THREADS MINIMUM EXTENDING BEYOND THE NUT WHEN PROPERLY TIGHTENED UNLESS OTHERWISE NOTED.

# PE 32-12-5461

©2008 California Department of Transportation
All Rights Reserved
US Patent # 7,410,321 B1

| REV | DESCRIPTION | BY |
|---|---|---|
| G | 09/08 NEW PATENT NUMBER | JDR |
| E | 06/08 ADJUSTED 201 FOR REDUCED TRAVEL TRAVEL WAS 150". ADDED SHEET 2 | [illegible] |
| B | 10/05 ADDED SUB ASSEMBLY 109 AND GUIDEBOX TOP VIEW CUT 31", #110, 111 WERE SIZE .087 | JDR |

NEXT ASSEMBLY

STATE OF CALIFORNIA
DEPARTMENT OF TRANSPORTATION

DIVISION OF EQUIPMENT

BARRIER TRAILER
GUIDEBOX FOR FLEXIBLE LINES

| | | |
|---|---|---|
| SCALE AS NOTED | DATE 08/11/02 | 1 61500 7 GB1 |
| DRAWN JVAISUD | DESIGNED A&HEELER | |
| CHECKED | GROUP 7 OF 11 | SHEET 1 OF 2 SHEETS |

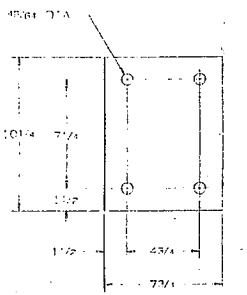


ITEM 202
SCALE: 1/4

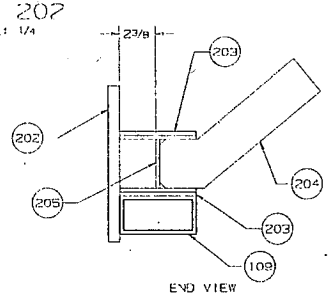


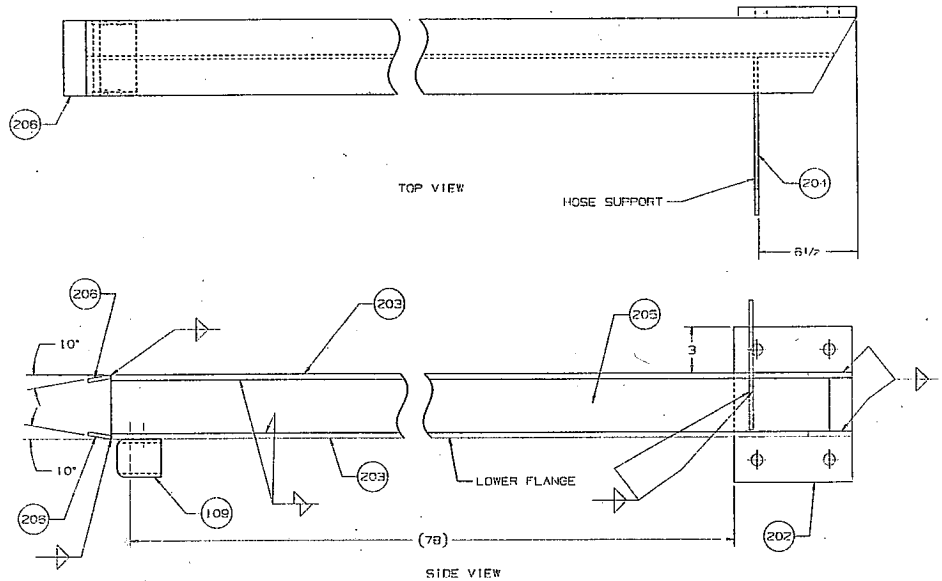


ITEM 201
GUIDE ARM.
SCALE: 1/4

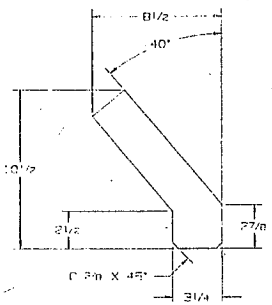


ITEM 204
SCALE: 3/8

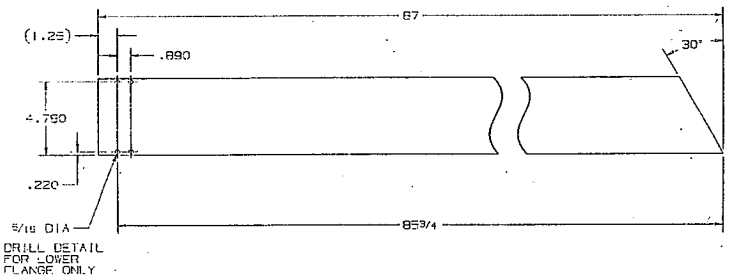


ITEM 203
SCALE: 1/4

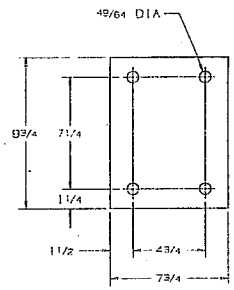


ITEM 208
SCALE: 1/4

## BILL OF MATERIALS

| ITEM | QTY | DESCRIPTION |
|---|---|---|
| 201 | 1 | WELD'D ASS'Y C/O 202 206 |
| 202 | 1 | 1 x 7 3/4 x 10 1/4 LG PLATE, ASTM A36 |
| 203 | 2 | 3/8 x 5 x 87 LG FLATBAR, ASTM 514 |
| 204 | 1 | 1/4 x 8 1/2 x 10 1/2 LG HRS PLATE |
| 205 | 1 | 1/4 x 3 1/2 x 85 1/2 LG FLATBAR, ASTM 514 |
| 206 | 2 | 1/4 x 1 1/2 x 5 LG HRS FLATBAR |
| | | |
| 208 | 1 | 1 x 7 3/4 x 9 3/4 LG PLATE, ASTM A36 |

NOTES:

1. ALL JOINTS TO BE WELDED CONTINUOUS UNLESS OTHERWISE SPECIFIED. SIZE OF ALL WELDS TO BE AT LEAST THE THICKNESS OF THE THINNER OF THE ADJACENT METALS.

PE 32-12-5461

©2008 California Department of Transportation
All Rights Reserved
US Patent # 7,410,321 B1

| REV | DESCRIPTION | BY |
|---|---|---|
| E | 06/08 NEW PATENT NUMBER | JOR |
| E | 06/08 CHANGED ITEM 203 WAS 90" | [illegible] |

NEXT ASSEMBLY

STATE OF CALIFORNIA
DEPARTMENT OF TRANSPORTATION
DIVISION OF EQUIPMENT

BARRIER TRAILER
GUIDE BOX ARM ASS'Y

SCALE AS NOTED | DATE 05/09/08 | 1-61500-7-GB2
DRAWN DOWNIN | DESIGNED WHEELER
CHECKED | GROUP 7 OF 11

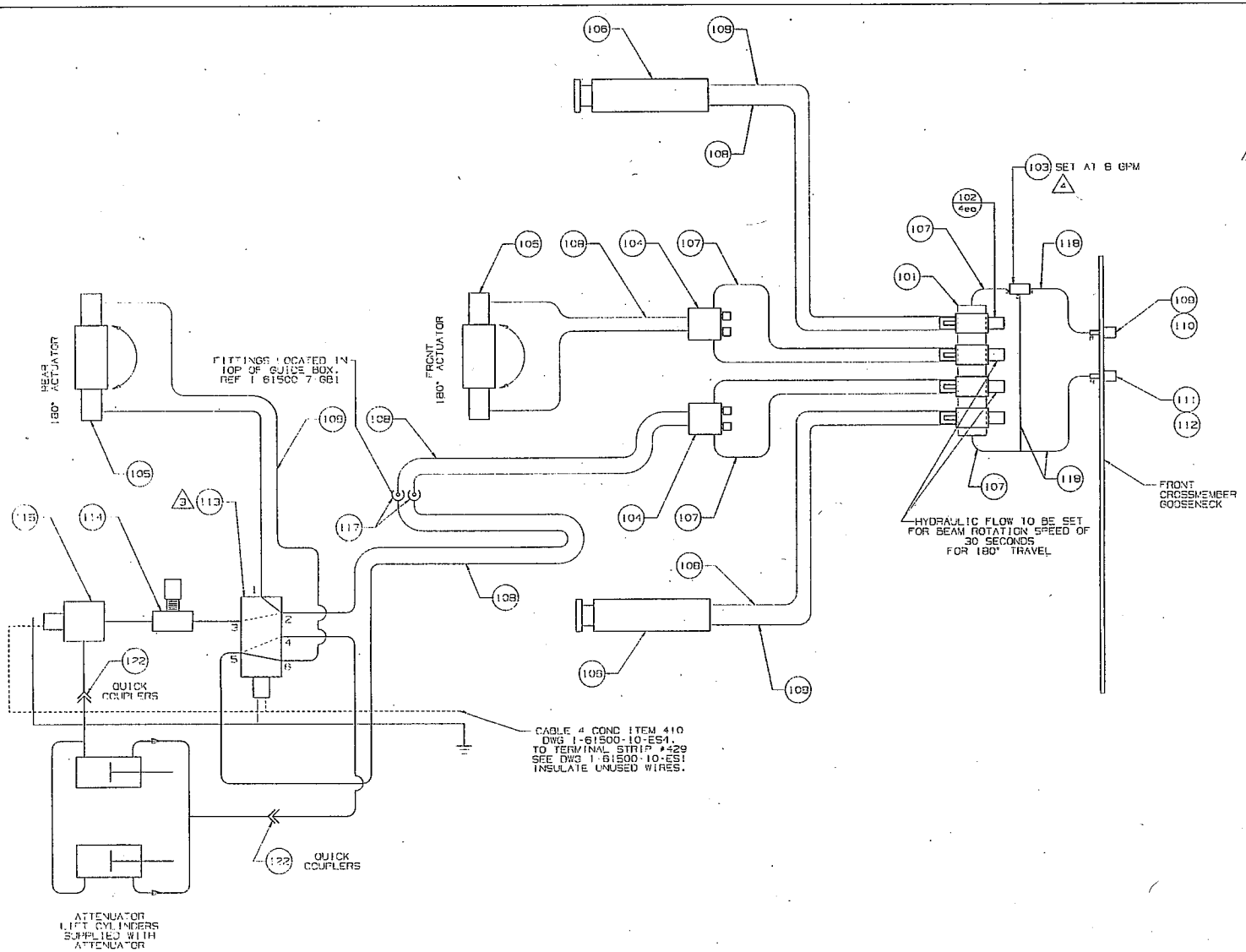


# HYDRAULIC SCHEMATIC

## RIGHT AND LEFT BARRIER BEAMS POWERED INDEPENDENTLY

## BILL OF MATERIALS

| ITEM | QTY | DESCRIPTION | PART STOCK # |
|---|---|---|---|
| 101 | 1 | HYDRAULIC VALVE MANIFOLD. DAMAN A0055048S | |
| 102 | 4 | HYDRAULIC VALVE PARKER-#D3WEC7KPP- < CMD1D05, RMBF12S_N, BOLT KIT BK62 | |
| 103 | 1 | PRIORITY FLOW CONTROL. SUN #FPFA-LAN-1FD | |
| 104 | 2 | COUNTERBALANCE VALVE (DOUBLE) SUN #CBCA-LFN-YEJ | |
| 105 | 2 | ROTATARY ACTUATOR 6000.000 lb-in,180° BASE MT, FEMALE KEYED, 15" ID, SAE SI HD. STD PORTS, PARKET #-T8600 180 DM. | |
| 106 | 2 | HYDRAULIC LANDING GEAR POWER GEAR-#30073 | |
| 107 | A.R. | 1/2 HYD HOSE GATES 6M3K | 065 2732 |
| 108 | A.R. | 3/8 HYD HOSE GATES 6M3K | 065-2722 |
| 109 | 1 | QUICK DISCONNECT COUPLER, 3/4" MALE. | 065 4 |
| 110 | 1 | DUST CAP | |
| 111 | 1 | QUICK DISCONNECT COUPLER 3/4" FEMALE. | 065 4241 |
| 112 | 1 | DUST CAP | |
| 113 | 1 | HYDRA FORCE #SV12-60-BT-N-12-EN | |
| 114 | 1 | PARKER #B8005 | 065-3017 |
| 115 | 1 | HYDRA FORCE # #SV10-22 BT-N-12D | 065 3997 |
| 116 | | | |
| 117 | 2 | ELBOW, BULKHEAD PARKER #8-WETX | |
| 118 | AS REQ | 3/4 HYD HOSE GATES #12M3K | |
| 119 | | | |
| 120 | | | |
| 121 | | | |
| 122 | 2 SETS | 3/8 QUICK DISC FEMALE FASTER 2TH 38 BFF<br>3/8 QUICK DISC MALE 2TH 38 BFV | 065-4237<br>065 4238 |

NOTE:
1. ALL WELDS, ELECTRICAL AND PAINT WILL BE IN COMPLIANCE WITH CALTRANS EQUIPMENT QUALITY STANDARDS. GO TO www.dot.ca.gov/hq/esc TO VIEW EQUIPMENT QUALITY STANDARDS.
2. ALL HYDRAULIC COMPONENTS TO BE RATED AT A MINIMUM OF 3000 PSI WORKING PRESSURE.

3 NORMAL FLOW 2 TO 1, 5 TO 6

ENERGIZED FLOW 2 TO 3, 5 TO 4

4 NOT REQUIRED IF TRACTOR HYD. SYSTEM SUPPLIES APX. 9 GALLONS PER MINUTE.

# PE 32-12-5461

©2006 California Department of Transportation
All Rights Reserved
DS Rights 1.7.810.321.01

| REV | DATE | DESCRIPTION | BY |
|---|---|---|---|
| G | 09/08 | NEW PATENT NUMBER | JDR |
| E | 06/08 | ADDED ITEM 117, 101 WAS 7 ARROW #SP4113455A, AS PER A W | DOWNEY |
| D | 04/07 | WAS SHEET 1-61500-8-HS3 | DOWNEY |
| C | 03/06 | ADDED THIS SHEET | JDR |

NEXT ASSEMBLY

STATE OF CALIFORNIA
DEPARTMENT OF TRANSPORTATION
DIVISION OF EQUIPMENT

BARRIER TRAILER
HYDRAULIC SCHEMATIC

| | | | |
|---|---|---|---|
| SCALE | NTS | DATE | 03/09/06 |
| DRAWN | J.RIME | DESIGNED | WHEELER |
| CHECKED | | GROUP 8 OF 11 | |

1-61500-8-HS

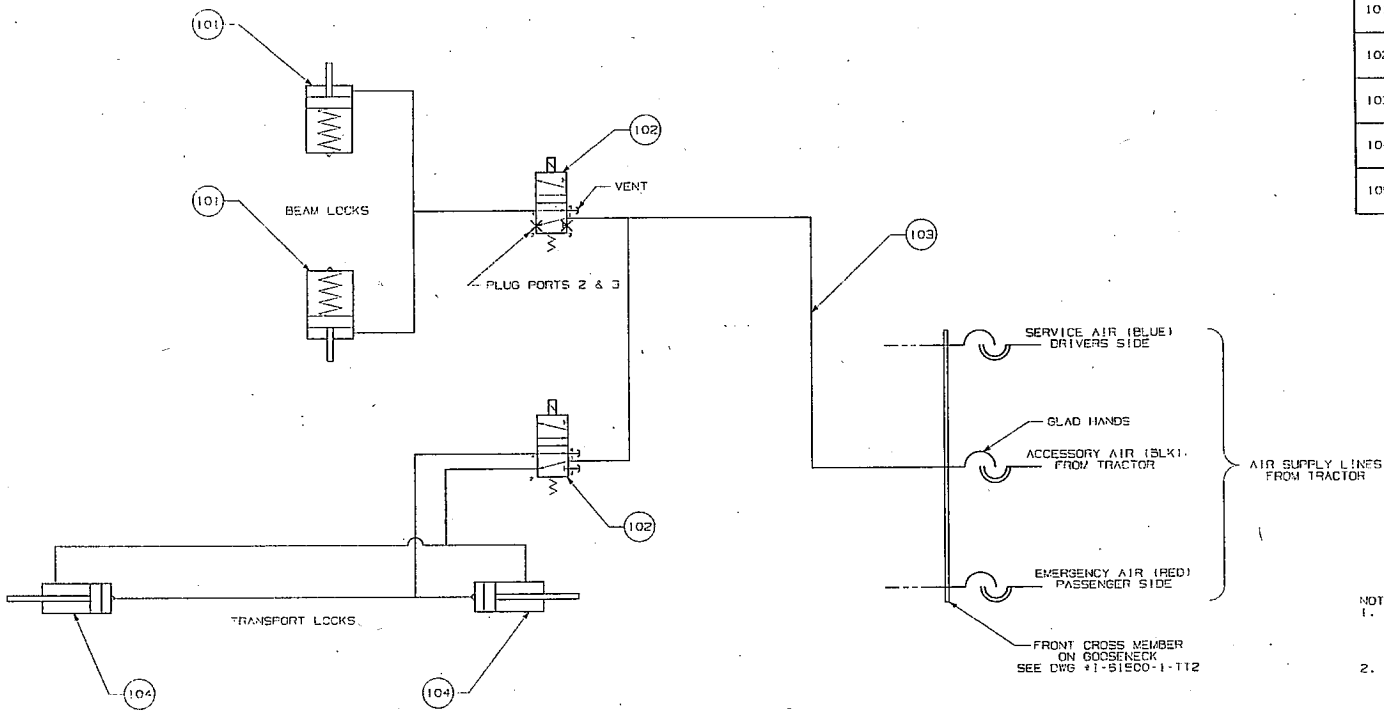


## BILL OF MATERIALS

| ITEM | QTY | DESCRIPTION |
|---|---|---|
| 101 | 2 | ITEM 309 ON DWG: 1-61500-8-TK3 |
| 102 | 2 | 4 WAY, 2 POSITION VALVE, SOL/SPG, 12 dc, 150 psi, 1/4 npt, IR ARO (ALPHA) # A212SS-012-D & CONN W/O WIRES # CS1 |
| 103 | 1 | AIR BRAKE TUBING, 3/8 OD, BLACK, PE1 TYPE B, SAE J844, DOT FMVSS106 |
| 104 | 1 | ITEM 413 ON DWG: 1 61500 4 TK4 |
| 105 | | |

NOTES:
1. ALL WELDS, ELECTRICAL AND PAINT WILL BE IN COMPLIANCE WITH CALTRANS EQUIPMENT QUALITY STANDARDS. GO TO www.dot.ca.gov/hq/esc/ TO VIEW EQUIPMENT QUALITY STANDARDS.
2. FLEXIBLE AIR LINE HOSE SHALL CONFORM TO SAE J844 AND DOT FMVSS 106 TYPE A or B NYLON TUBING, i.e. PARFLEX or SYNFLEX AIR BRAKE TUBING.
3. AIR LINE PUSH IN FITTINGS SHALL MEET SAE J2494 AND DOT FMVSS 571.106, i.e. PRESTOMATIC or AQ-DOT PUSH-IN AIR BRAKE FITTINGS.
4. ALL EQUIPMENT USING PNEUMATIC COMPONENTS SHALL NOT LEAK.

# PE 32-12-5461

©2008 California Department of Transportation
All Rights Reserved
DR Record # 7,410,921 B1

| REV | DATE | DESCRIPTION | BY |
|---|---|---|---|
| G | 09/08 | NEW PATENT NUMBER | JDP |
| E | 06/08 | UPDATED. ADDED VENTS | J Payne |
| B | 06/05 | REMOVED ARM LOCKS FROM SCHEMATIC | J JR |
| A | 10/02 | ITEM 101 & 109, 2¼ STROKE WAS 3" STROKE | J Payne |

NEXT ASSEMBLY
X

TOLERANCES UNLESS OTHERWISE SPECIFIED
DECIMAL ± X
FRACTIONAL ± X
ANGULAR ± °
ENGLISH HOLES ± "
METRIC HOLES ± "

STATE OF CALIFORNIA
DIVISION OF EQUIPMENT

DIVISION OF EQUIPMENT

BARRIER TRAILER
PNEUMATIC SCHEMATIC

| | | | |
|---|---|---|---|
| SCALE | X | DATE 29 May 02 | 1 61500 9 TM |
| DRAWN | J Payne | DESIGNED CAI | |
| TRACED | | GROUP 9 of 11 | |

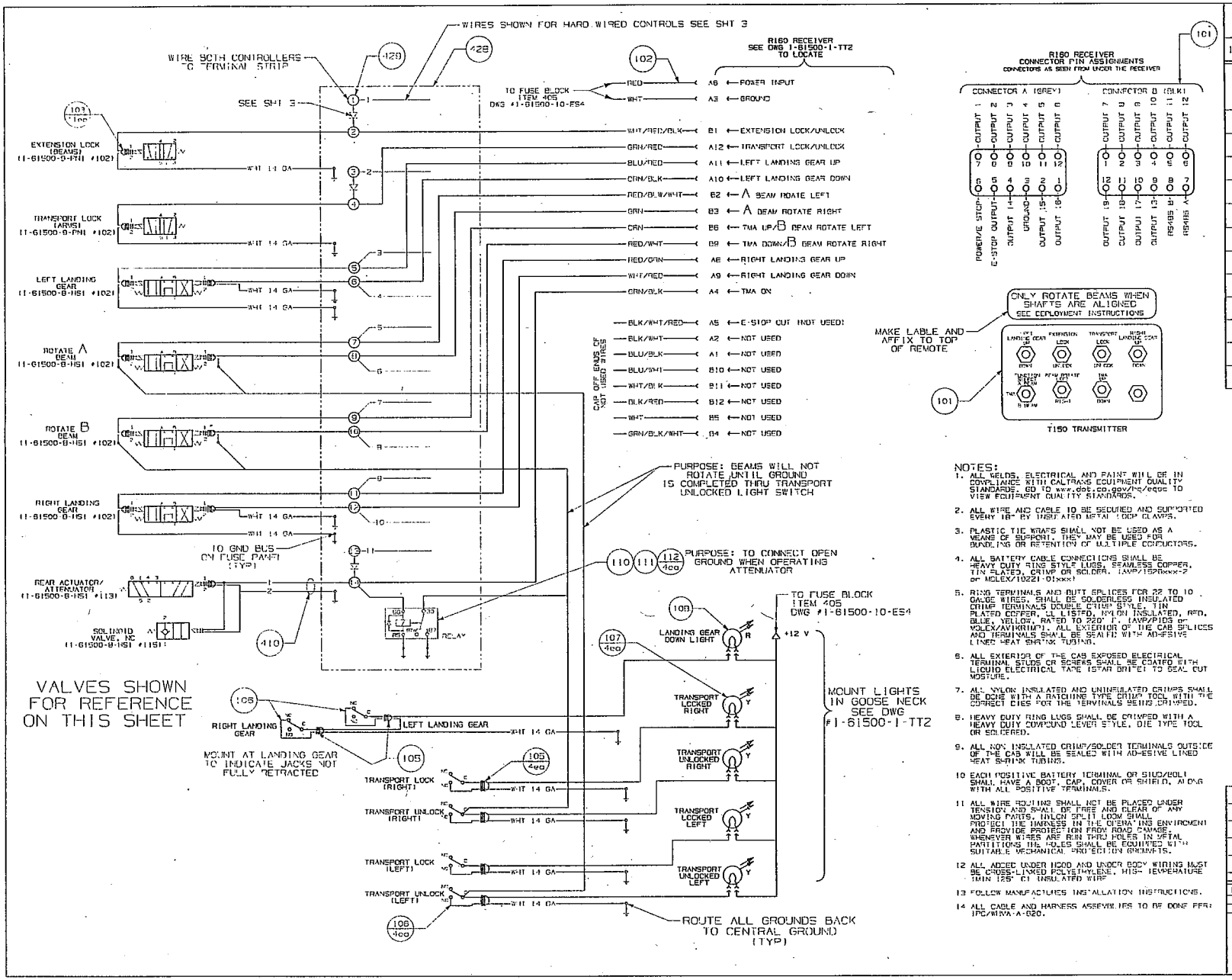


## BILL OF MATERIALS

| ITEM | QTY | DESCRIPTION | MANUF/ DWG NO | PT NO |
|---|---|---|---|---|
| 101 | 1 | CALTRANS RECEIVER OMNEX R160, CALTRANS TRANSMITTER OMNEX T150, OUTPUT CABLE FOR R160 | DAKOTA ELECTRONICS (800) 727 2470 NOT ASSIGNED | |
| 102 | 1 | TEATHER (PENDANT) CABLE | DAKOTA ELECTRONICS OMNEX NO. PXH3050 | |
| 103 | 11 | LIQ TIGHT CORD GRIP, PG 9, 2 HOLE .12 DIA | SEALCON MODEL CM09A2-BK | OR EQUIVALENT |
| 104 | | | | |
| 105 | 8 | LIQ TIGHT CORD GRIP, 1/2 NPT, 2 HOLE .15 DIA | McMASTER 7804K31 & 4839K208 | OR EQUIV |
| 106 | 8 | LIMIT SWITCH, COIL SPRING WOBBLE LEVER | PRECO SWM 43 | OR EQUIV |
| 107 | 4 | MARKER & CLEARANCE YEL LED 2½ SEALED | TRUCK LITE 10050Y | 034-4899 |
| 108 | 1 | MARKER & CLEARANCE RED LED 2½ SEALED | TRUCK LITE 10050R | 034-4890 |
| 109 | | | | |
| 110 | 1 | RELAY, MINI 20/40 AMP WITH RESISTOR | DELTA 97404 | 030-4216 |
| 111 | 1 | MINI RELAY CONN, METRI PACK 630 SF | DELPHI PACKARD 12034471 | 030-4977 |
| 112 | 4 | FEMALE TERMINAL 630 RELAY 14-16 Ga, TIN PL | DELPHI PACKARD 12015865 | |
| 113 | | | | |

## NOTES:

1. ALL WELDS, ELECTRICAL AND PAINT WILL BE IN COMPLIANCE WITH CALTRANS EQUIPMENT QUALITY STANDARDS. GO TO www.dot.ca.gov/hq/eqpc TO VIEW EQUIPMENT QUALITY STANDARDS.
2. ALL WIRE AND CABLE TO BE SECURED AND SUPPORTED EVERY 18" BY INSULATED METAL LOOP CLAMPS.
3. PLASTIC TIE WRAPS SHALL NOT BE USED AS A MEANS OF SUPPORT. THEY MAY BE USED FOR BUNDLING OR RETENTION OF MULTIPLE CONDUCTORS.
4. ALL BATTERY CABLE CONNECTIONS SHALL BE HEAVY DUTY RING STYLE LUGS, SEAMLESS COPPER, TIN PLATED, CRIMP OR SOLDER. (AMP/152Rxxx-2 or MOLEX/10221-01xxx)
5. RING TERMINALS AND BUTT SPLICES FOR 22 TO 10 GAGE WIRES, SHALL BE SOLDERLESS INSULATED CRIMP TERMINALS DOUBLE CRIMP STYLE, TIN PLATED COPPER, UL LISTED, NYLON INSULATED, RED, BLUE, YELLOW, RATED TO 220° F. (AMP/PIDG or MOLEX/AVIKRIMP). ALL EXTERIOR OF THE CAB SPLICES AND TERMINALS SHALL BE SEALED WITH AD-ESIVE LINED HEAT SHRINK TUBING.
6. ALL EXTERIOR OF THE CAB EXPOSED ELECTRICAL TERMINAL STUDS OR SCREWS SHALL BE COATED WITH LIQUID ELECTRICAL TAPE (STAR BRITE) TO SEAL OUT MOISTURE.
7. ALL NYLON INSULATED AND UNINSULATED CRIMPS SHALL BE DONE WITH A RATCHING TYPE CRIMP TOOL WITH THE CORRECT DIES FOR THE TERMINALS BEING CRIMPED.
8. HEAVY DUTY RING LUGS SHALL BE CRIMPED WITH A HEAVY DUTY COMPOUND LEVER STYLE, DIE TYPE TOOL OR SOLDERED.
9. ALL NON INSULATED CRIMP/SOLDER TERMINALS OUTSIDE OF THE CAB WILL BE SEALED WITH AD-ESIVE LINED HEAT SHRINK TUBING.
10. EACH POSITIVE BATTERY TERMINAL OR STUD/BOLT SHALL HAVE A BOOT, CAP, COVER OR SHIELD, ALONG WITH ALL POSITIVE TERMINALS.
11. ALL WIRE ROUTING SHALL NOT BE PLACED UNDER TENSION AND SHALL BE FREE AND CLEAR OF ANY MOVING PARTS. NYLON SPLIT LOOM SHALL PROTECT THE HARNESS IN THE OPERATING ENVIRONMENT AND PROVIDE PROTECTION FROM ROAD DAMAGE. WHENEVER WIRES ARE RUN THRU HOLES IN METAL PARTITIONS OR HOLES SHALL BE EQUIPPED WITH SUITABLE MECHANICAL PROTECTION GROMMETS.
12. ALL ADDED UNDER HOOD AND UNDER BODY WIRING MUST BE CROSS-LINKED POLYETHYLENE, HIGH TEMPERATURE (MIN 125° C) INSULATED WIRE
13. FOLLOW MANUFACTURES INSTALLATION INSTRUCTIONS.
14. ALL CABLE AND HARNESS ASSEMBLIES TO BE DONE PER IPC/WHA-A-620.

# PE 32-12-5461

©2008 Cal Trans Department of Transportation
All Rights Reserved
US Patent # 7,470,321 B1

| REV | DATE | DESCRIPTION | BY |
|---|---|---|---|
| G | 09/08 | NEW PATENT NUMBER | JCH |
| E | 08/07 | ADDED 20 A FUSE DETAIL TO PSB IN, SEE SHT 4 AND 10, SHEET 2 OBSOLETE | J Payne |
| D | 06/05 | REDREW WITH OMNEX WIRELESS CONTROL | J Payne |
| C | 02/05 | UPDATED LAZER SW & LANDING GEAR SW | J Payne |
| B | 05/04 | ADDED ITEMS 126, 127, 128 | J Payne |

NEXT ASSEMBLY

STATE OF CALIFORNIA
DEPARTMENT OF TRANSPORTATION
DIVISION OF EQUIPMENT

BARRIER TRAILER, REMOTE
HYD CONTROL ELECTRICAL SCHEMATIC

| | | | |
|---|---|---|---|
| SIZE | X | DATE 13 June 02 | 1-81500-10 ES1 |
| DRAWN | J Payne | DESIGNED Cal | |
| CHECKED | | GROUP 10 OF 11 | |

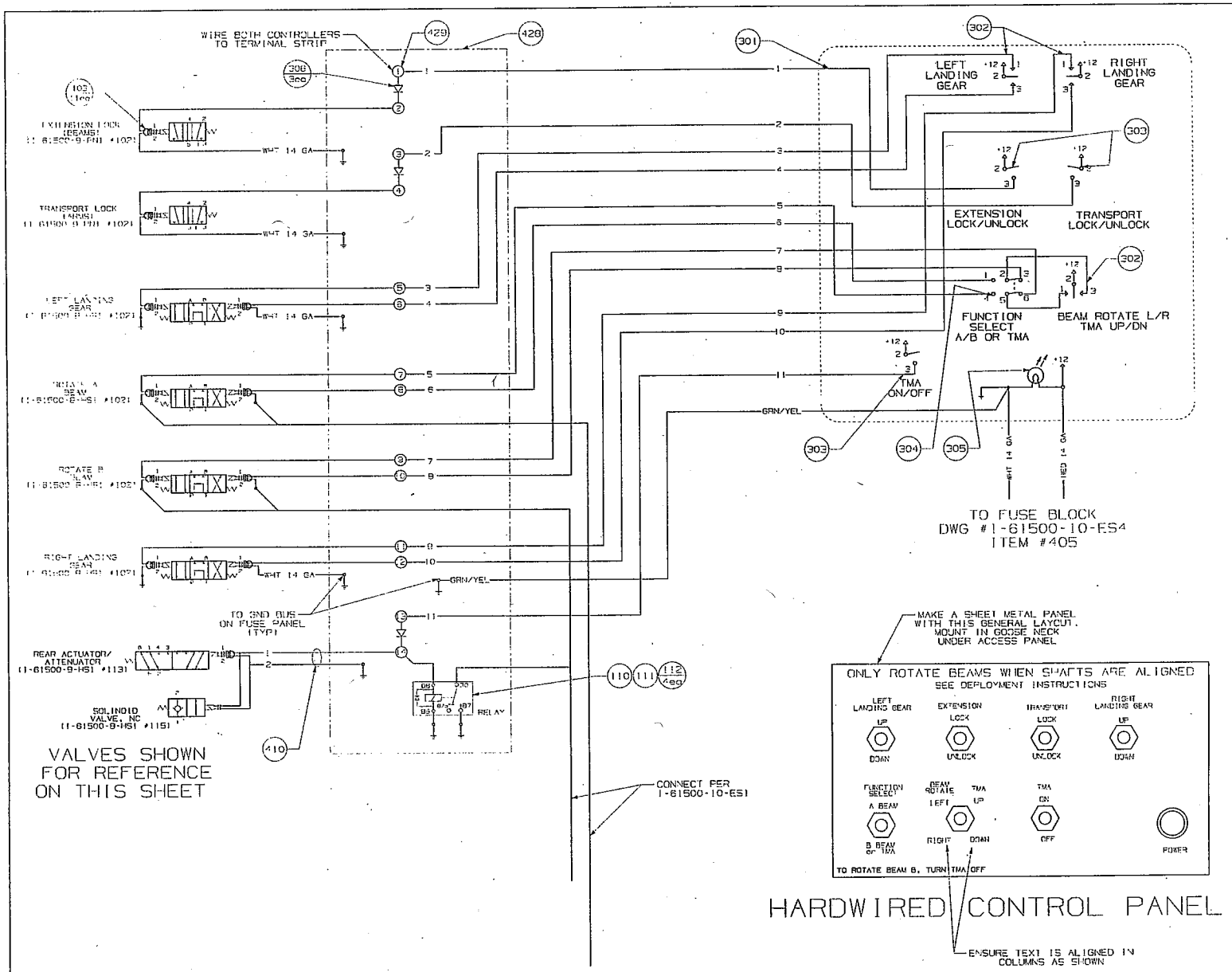


## BILL OF MATERIALS

| ITEM | QTY | DESCRIPTION | MANUF. # DWG NO. | CT NO. / ALT NO. |
|---|---|---|---|---|
| 301 | AS REQ | 12 COND. 16 GA. CABLE PVC, SEQ. NUMBERS | McMASTER 7872K91 | DRAYNORD 1-PU8 |
| 302 | 3 | SPST SEALED TOGGLE SWITCH. (ON) OFF (ON) | EATON 8812K14 | McMASTER 7172A47 |
| 303 | 3 | SPST SEALED TOGGLE SWITCH. ON OFF | EATON 8801K22 | McMASTER 7172K41 |
| 304 | 1 | DPDT SEALED TOGGLE SWITCH. ON NONE ON | EATON 8801K22 | McMASTER 7172A41 |
| 305 | 1 | PANEL LAMP, 12V RED | CHICAGO MINIATURE 1090A-12 or 1090-12 | |
| 306 | 3 | DIODE, (RECTIFIER) SCHOTTY 5 AMP | VISHAY 50S0100 | |

NOTES:

1. ALL WELDS, ELECTRICAL AND PAINT WILL BE IN COMPLIANCE WITH CALTRANS EQUIPMENT QUALITY STANDARDS. GO TO www.dot.ca.gov/hq/esc to VIEW EQUIPMENT QUALITY STANDARDS.
2. ALL WIRE AND CABLE TO BE SECURED AND SUPPORTED EVERY 10" BY INSULATED METAL LOOP CLAMPS.
3. PLASTIC TIE WRAPS SHALL NOT BE USED AS A MEANS OF SUPPORT. THEY MAY BE USED FOR BUNDLING OR RETENTION OF MULTIPLE CONDUCTORS.
4. ALL BATTERY CABLE CONNECTIONS SHALL BE HEAVY DUTY RING STYLE LUGS, SEAMLESS COPPER, TIN PLATED, CRIMP OR SOLDER, TAYLOR/Raxxx 2 or MCLAX/1AWG1-0/xxx.
5. RING TERMINALS AND BUTT SPLICES FOR 22 TO 10 GAUGE WIRES, SHALL BE SOLDERLESS INSULATED CRIMP TERMINALS DOUBLE CRIMP STYLE, TIN PLATED COPPER, UL LISTED, NYLON INSULATED, RED, BLUE, YELLOW, RATED TO 220° F. LAMPHUS or VOLEX/AVIATRIMPL. ALL EXTERIOR OF THE CAB SPLICES AND TERMINALS SHALL BE SEALED WITH ADHESIVE LINED HEAT SHRINK TUBING.
6. ALL EXTERIOR OF THE CAB EXPOSED ELECTRICAL TERMINAL STUDS OR SCREWS SHALL BE COATED WITH LIQUID ELECTRICAL TAPE (STAR BRITE OR DUPLICATE FELT (EUREKA CHEVI) AND ALL PLUGS AND SOCKETS SHALL BE FILLED WITH INK 77 OR EQUIVALENT COMPOUND TO SEAL OUT MOISTURE.
7. ALL NYLON INSULATED AND UNINSULATED CRIMPS SHALL BE DONE WITH A RATCHETING TYPE CRIMP TOOL WITH THE CORRECT DIES FOR THE TERMINALS BEING CRIMPED.
8. HEAVY DUTY RING LUGS SHALL BE CRIMPED WITH A HEAVY DUTY COMPOUND LEVER STYLE, DIE TYPE 100 OR SOLDERED.
9. ALL NON INSULATED CRIMP/SOLDER TERMINALS OUTSIDE OF THE CAB SHALL BE SEALED WITH ADHESIVE LINED HEAT SHRINK TUBING.
10. EACH POSITIVE BATTERY TERMINAL OR STUD/BOLT SHALL HAVE A BOOT, CAP, COVER OR SHIELD, ALONG WITH ALL POSITIVE TERMINALS.
11. ALL WIRE ROUTING SHALL NOT BE PLACED UNDER TENSION AND SHALL BE FREE AND CLEAR OF ANY MOVING PARTS AND HEAT SOURCES. NYLON SPLIT LOOM SHALL PROTECT THE HARNESS IN THE OPEN AND ENVIRONMENT AND PROVIDE PROTECTION FROM ROAD DEBRIS. WHENEVER WIRES ARE ROUTED THROUGH HOLES IN METAL PARTITIONS THE HOLES SHALL BE DEBURRED & EQUIPPED WITH SUITABLE MECHANICAL PROTECTION GROMMETS.
12. ALL ADDED UNDER HOOD AND UNDER BODY WIRING MUST BE CROSS-LINKED POLYETHYLENE, HIGH TEMPERATURE (UNDER 125° C) INSULATED WIRE.
13. FOLLOW MANUFACTURERS INSTALLATION INSTRUCTIONS.
14. DO NOT INSTALL EQUIPMENT IN THE AIRBAG DEPLOYMENT ZONE.
15. GROUND SYMBOLS SHOWN FOR SCHEMATIC SIMPLICITY. RUN GROUNDS TO CENTRAL GROUND POINT OR BUS BOLTS.
16. ALL CABLE AND HARNESS ASSEMBLIES TO BE DONE TO IPC/WHMA-A-620.

PE 32-12-5461

©2009 California Department of Transportation
All Rights Reserved
US Patent # 7,410,321 B1

| REV | DESCRIPTION | BY |
|---|---|---|
| G | 09/08 NEW PATENT NUMBER | JDR |
| E | 09/07 CHANGED FUSE NOTE. | J Payne |

NEXT ASSEMBLY: X

STATE OF CALIFORNIA
DEPARTMENT OF TRANSPORTATION
DIVISION OF EQUIPMENT

BARRIER TRAILER, HARD WIRED CONTROL ELECTRICAL SCHEMATIC

| | | | |
|---|---|---|---|
| ISSUE | X | DATE 13 June 02 | 1-61500-10 ES1 |
| DRAWN | J Payne | ASSIGNED Col | |
| CHECKED | | GROUP 10 OF 11 | SHEET 1 OF 1 SHEETS |

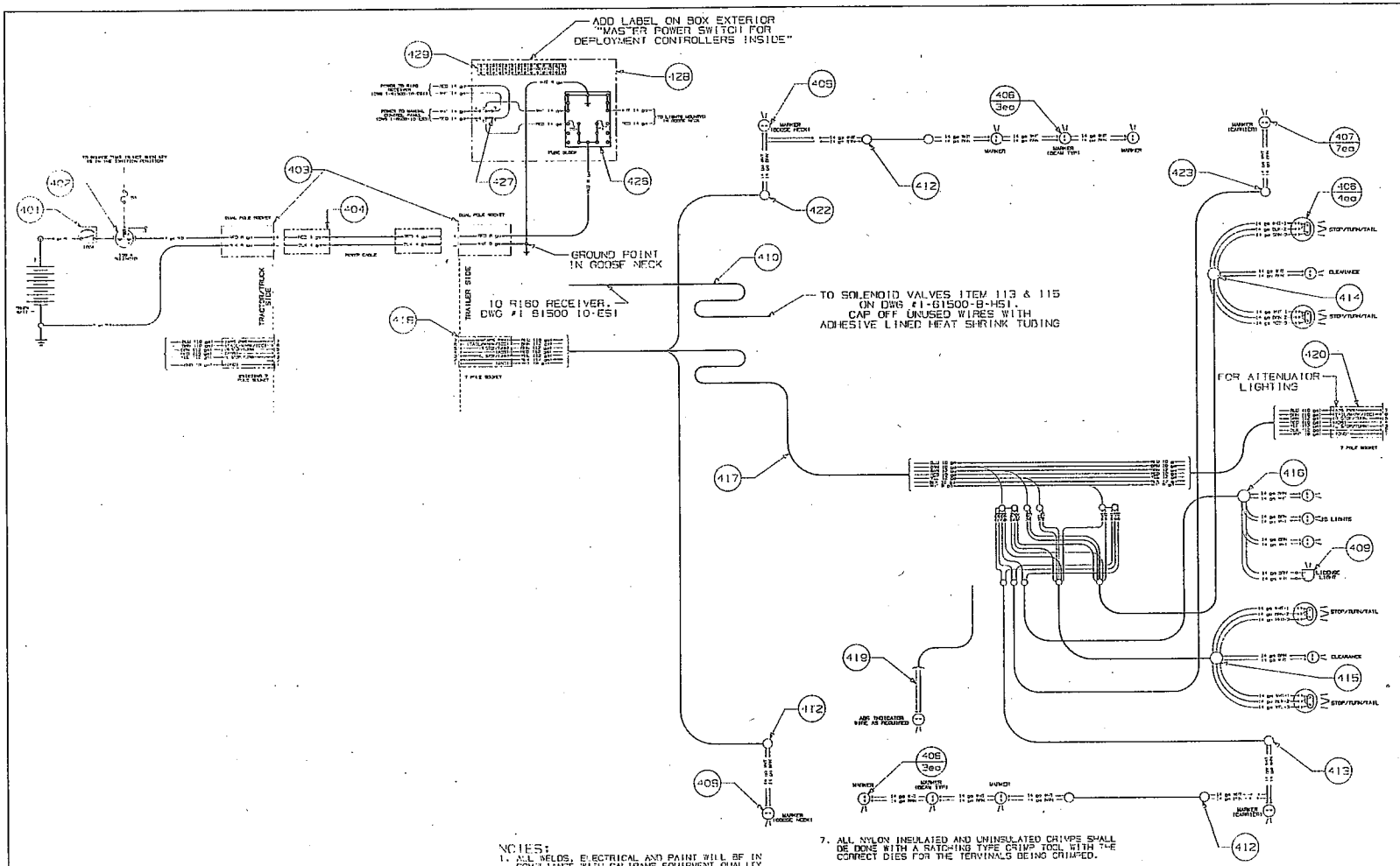


## BILL OF MATERIALS

| ITEM | QTY | DESCRIPTION | MANUF. #/ DWG NO. | CT NO./ ALT NO. |
|---|---|---|---|---|
| 401 | 1 | SWITCHABLE RESET CIRCUIT BREAKER, 100A | PUSSMANN 1951009- | - |
| 402 | 1 | SOLENOID, CONT DUTY 100 A, SPST NO, 12V | COLE HERSEE 24612 10 | - |
| 403 | 2 | DUAL POLE SOCKET, POWER | PHILLIPS 15 326 | CR EQUIV |
| 404 | 1 | DUAL POLE COIL CAB-F WITH PLUG, 12 ft. | PHILLIPS 23-2326 | CT EQUIV |
| 405 | | | | |
| 406 | 4 | STOP, TAIL, TURN, RED LED 4" SEALED | TRUCK LITE 44097 | 034-4R24 |
| 407 | 7 | MARKER & CLEARANCE RED LED 2½ SEALED | TRUCK LITE 10050R | 034-4R00 |
| 408 | 8 | MARKER & CLEARANCE AMBER LED 2½ SEALED | TRUCK LITE 10050Y | 034-4A00 |
| 409 | 1 | LICENSE PLATE LIGHT LED | TRUCK LITE 15040 | 034-4R97 |
| 410 | AS REQ | 4 COND 16 ga .31 OD FLEXIBLE CABLE | McMASTER 8082K65 | CT FOL |
| 411 | | | | |
| | | ITEMS 412-423 ARE FOR REFERENCE. THERE ARE OTHER COMBINATION OF CABLES AND HARNESS THAT WILL ACHIVE THE SAME SEALED WIRING SYSTEM. | | |
| 412 | 3 | LED MARKER CLEARANCE JUMPER HARNESS | TRUCK LITE 50393/4 | CR EQUIV |
| 413 | 1 | LED MARKER CLEARANCE JUMPER HARNESS | TRUCK LITE 50361 | CR EQUIV |
| 414 | 1 | LED HARNESS, RIGHT SIDE, STOP/TAIL /TURN & MARKER | TRUCK LITE 50242 | CT EQUIV |
| 415 | 1 | LED HARNESS, LEFT SIDE STOP/TAIL /TURN & MARKER | TRUCK LITE 50243 | CR EQUIV |
| 416 | 1 | LED 4 PLUG HARNESS ID & LIC PLATE LIGHT | TRUCK LITE 88038 | CR EQUIV |
| 417 | 1 | 7 CONDUCTOR MAIN CABLE | TRUCK LITE 98870 | CT EQUIV |
| 418 | 1 | 7 CONDUCTOR MAIN CABLE W/NOSE BOX | TRUCK LITE 99805 | CR EQUIV |
| 419 | 1 | ABS POWER HARNESS | TRUCK LITE 88100 | CR EQUIV |
| 420 | 1 | 7 CONDUCTOR NOSE BOX REPAIR HARNESS | TRUCK LITE 99810 | CT EQUIV |
| 421 | 1 | LED MARKER CLEARANCE JUMPER HARNESS | TRUCK LITE 50392 | CR EQUIV |
| 422 | 1 | LED MARKER CLEARANCE JUMPER HARNESS | TRUCK LITE 50362 | CR EQUIV |
| 423 | 1 | LED MARKER CLEARANCE JUMPER HARNESS | TRUCK LITE 50374 | CR EQUIV |
| 424 | | | | |
| 425 | | | | |
| 426 | 1 | DC FUSE BLOCK, ATC 6 CIR W/NEG BUSS | BLUE SEA 5028 | McMAS 6182 |
| 427 | 1 | SPDT TOGGLE SWITCH, SEALED, ON OFF ON | RATED 9TIMES OF 8921K1 | McMASTER 8924K39 |
| 428 | 1 | FIBERGLASS ENCLOSURE, 13.2 X 11.2 X 6.6, HINGED COVER W/PAD LOCKABLE LATCH | STAHLIN SCL131106PL | McMASTER 7209K74 |
| 429 | 1 | TERMINAL STRIP, 14 POLES, .66 ¢ | McMASTER 7527K94 | CR EQUIV |
| 430 | | | | |
| 431 | | | | |

IT IS OK TO MAKE JACKETED CABLE BY USING SINGLE WIRES RUN INSIDE THE NYLON SPLIT LOOM

## WIRE REQUIREMENT LIST

| SIZE AWG | NUM OF COND | INSULATION COLOR | TYPE | MANUF PART NUM. (OR EQUIV.) |
|---|---|---|---|---|
| 8 | 1 | RED, WHT | AUTOMOTIVE STARTER, GND, BATT CABLE, SAE J-1127 | TEWC SGX 8 or SGT065133-HT-xxx |
| 8 | 1 | COLORS AS REQUIRED | SAE J1128 TYPE GXL OR SAE J-1127 | TEWC GXL 8 OR SXL 8 |
| 10 | 1 | COLORS AS REQUIRED | SAE J1128 TYPE GXL | TEWC GXL 10 |
| 12 | 1 | COLORS AS REQUIRED | SAE J1128 TYPE GXL | TEWC GXL 12 |
| 14 | 1 | COLORS AS REQUIRED | SAE J1128 TYPE GXL | TEWC GXL 14 |

NOTES:

1. ALL WELDS, ELECTRICAL AND PAINT WILL BE IN COMPLIANCE WITH CALTRANS EQUIPMENT QUALITY STANDARDS. GO TO www.dot.ca.gov/hq/qasc TO VIEW EQUIPMENT QUALITY STANDARDS.
2. ALL WIRE AND CABLE TO BE SECURED AND SUPPORTED EVERY 18" BY INSULATED METAL LOOP CLAMPS.
3. PLASTIC TIE WRAPS SHALL NOT BE USED AS A MEANS OF SUPPORT. THEY MAY BE USED FOR BUNDLING OR RETENTION OF MULTIPLE CONDUCTORS.
4. ALL BATTERY CABLE CONNECTIONS SHALL BE HEAVY DUTY RING STYLE LUGS, SEAMLESS COPPER, TIN PLATED, CRIMP OR SOLDER. (AMP/1526xxx-2 or MOLEX/19221-01xxx)
5. RING TERMINALS AND BUTT SPLICES FOR 22 TO 10 GAUGE WIRES, SHALL BE SOLDERLESS INSULATED CRIMP TERMINALS DOUBLE CRIMP STYLE, TIN PLATED COPPER, UL LISTED, NYLON INSULATED, RED, BLUE, YELLOW, RATED TO 220° F. (AMP/PIDG or MOLEX/AVIKRIMP). ALL EXTERIOR OF THE CAB SPLICES AND TERMINALS SHALL BE SEALED WITH ADHESIVE LINED HEAT SHRINK TUBING.
6. ALL EXTERIOR OF THE CAB EXPOSED ELECTRICAL TERMINAL STUDS OR SCREWS SHALL BE COATED WITH LIQUID ELECTRICAL TAPE (STAR BRITE) AND ALL PLUGS AND SOCKETS SHALL BE FILLED WITH DW-77 COMPOUND (MANUF BY TRUCK LITE) TO SEAL OUT MOISTURE.
7. ALL NYLON INSULATED AND UNINSULATED CRIMPS SHALL BE DONE WITH A RATCHING TYPE CRIMP TOOL WITH THE CORRECT DIES FOR THE TERMINALS BEING CRIMPED.
8. HEAVY DUTY RING LUGS SHALL BE CRIMPED WITH A HEAVY DUTY COMPOUND LEVER STYLE, DIE TYPE TOOL OR SOLDERED.
9. ALL NON INSULATED CRIMP/SOLDER TERMINALS OUTSIDE OF THE CAB WILL BE SEALED WITH ADHESIVE LINED HEAT SHRINK TUBING.
10. EACH POSITIVE BATTERY TERMINAL OR STUD/BOLT SHALL HAVE A BOOT, CAP, COVER OR SHIELD, ALONG WITH ALL POSITIVE TERMINALS.
11. ALL WIRE ROUTING SHALL NOT BE PLACED UNDER TENSION AND SHALL BE FREE AND CLEAR OF ANY MOVING PARTS. NYLON SPLIT LOOM SHALL PROTECT THE HARNESS IN THE OPERATING ENVIROMENT AND PROVIDE PROTECTION FROM ROAD DAMAGE. WHENEVER WIRES ARE RUN THRU HOLES IN METAL PARTITIONS THE HOLES SHALL BE EQUIPPED WITH SUITABLE MECHANICAL PROTECTION GROMMETS.
12. ALL ADDED UNDER HOOD AND UNDER BODY WIRING MUST BE CROSS-LINKED POLYETHYLENE, HIGH TEMPERATURE (MIN 125° C) INSULATED WIRE.
13. FOLLOW MANUFACTURES INSTALLATION INSTRUCTIONS.
14. ALL CABLE AND HARNESS ASSEMBLIES TO BE DONE PER: TRC/WHMA-A-620.

# PE 32-12-5461

©2009 California Department of Transportation
All Rights Reserved
US Patent # 7,410,321 B1

| REV | DATE | DESCRIPTION | BY |
|---|---|---|---|
| G | 08/08 | NEW PATENT NUMBER | JOR |
| E | 09/07 | ADDED ITEM 432, SWITCH, ITEM 408 WAS 4. | J Payne |

NEXT ASSEMBLY: X

STATE OF CALIFORNIA
DEPARTMENT OF TRANSPORTATION
DIVISION OF EQUIPMENT

BARRIER TRAILER
DC ELECTRICAL SCHEMATIC

| | | | |
|---|---|---|---|
| DRAWN | J Payne | DATE | 9 Dec 08 |
| CHECKED | | SCALE | X |
| | | GROUP | 10 of 11 |

1-81500-10 ES4

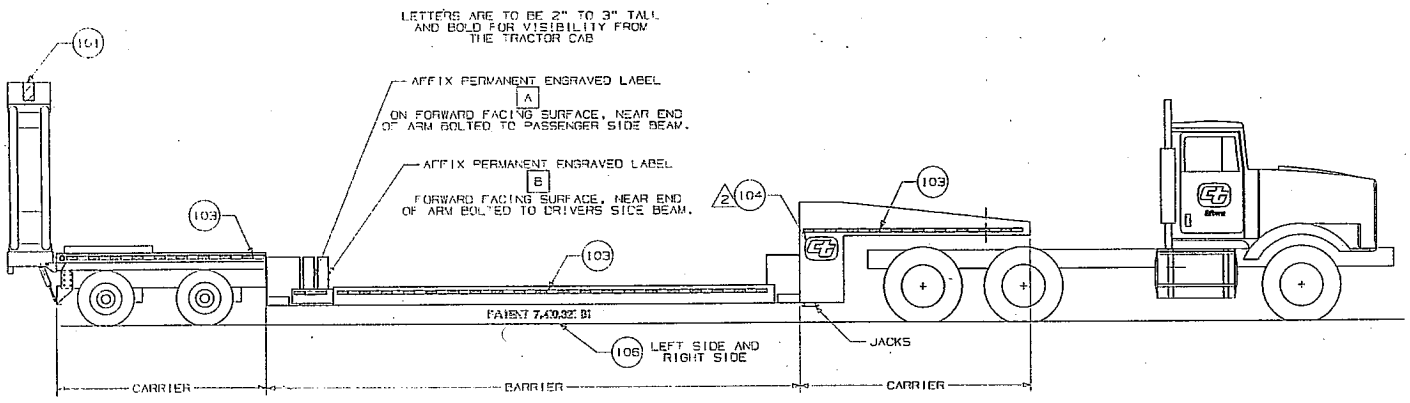


BARRIER TRAILER WITH TRACTOR

SIDE VIEW

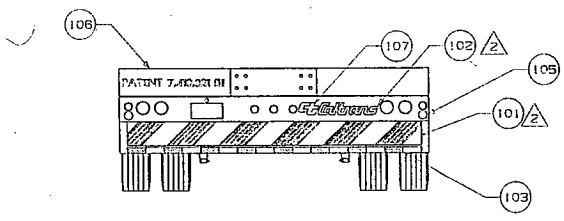


BARRIER TRAILER

REAR VIEW

## BILL OF MATERIALS

| ITEM | QTY | DESCRIPTION |
|---|---|---|
| 101 | 2 | STRIPING, ORANGE & WHITE DIAGONAL<br>AVERY DENNISON 911 CT STK# 053 2047 |
| 102 | 1 | DECAL, "CALTRANS" 4" ORANGE<br>DWG# 03-0007-01 CT STK# 053-4801 |
| 103 | AR | TAPE, CONSPICUITY 3M# 981-32CF<br>CT STK# 053 4681 |
| 104 | 2 | DECAL, "CT" 100%<br>DWG# 03-0004-01 CT STK# 053-4750 |
| 105 | 2 | 3" ROUND TAPE REFLECTORS, RED<br>TRUCK LITE #99175R CT# 034 1365 |
| 106 | 3 | 3" TALL, 1/2" THICK LINE WEIGHT, BLOCK, BLACK LETTERS: 'PATENT 7,410,321 B1' |
| 107 | 1 | 4" DECAL, "CT"<br>ORANGE CT# 053-5136 |

NOTES:

1. ALL WELDS, ELECTRICAL AND PAINT WILL BE IN COMPLIANCE WITH CALTRANS EQUIPMENT QUALITY STANDARDS. GO TO www.dot.ca.gov/hq/eqsc TO VIEW EQUIPMENT QUALITY STANDARDS.

2. DECALS ITEM #101,102 AND 104 WILL BE SUPPLIED BY THE STATE OF CALIFORNIA.

PE 32-12-5461

©2008 California Department of Transportation
All Rights Reserved
US Patent # 7,410,321 B1

| REV | DESCRIPTION | BY |
|---|---|---|
| G | 09/09 NEW PATENT NUMBER | JDR |
| F | 07/08 ADDED 'B2' TO PATENT NUMBER | WHEELER |
| E | June 08 ADDED PATENT NUMBER | J Hogue |
| B | 06/05 ADDED ATTENUATOR TO TRAILER | JDR |

NEXT ASSEMBLY

STATE OF CALIFORNIA
DEPARTMENT OF TRANSPORTATION
DIVISION OF EQUIPMENT

BARRIER TRAILER
TRANSPORT AND TRAILER

| | | | |
|---|---|---|---|
| SCALE 1/32 | DATE 09/01 | | 1-61500-11-DE1 |
| DRAWN WHEELER | DESIGNED STAFF | | |
| CHECKED | GROUP 11 of 11 | | |