Health Science Associates TECHNICAL AND ADVISORY SERVICES • ENVIRONMENTAL HEALTH AND SAFETY

January 27, 2000

Jim Williams
Maintenance and Operations Supervisor
Orange County Fair & Exposition Center
88 Fair Drive
Costa Mesa, CA 92626

Re: Asbestos and Lead-Based Paint Survey, Orange County Fair, Cafeteria Building, performed on January 4, 2000; HSA Project Number 00LA135

Dear Mr. Williams:

Health Science Associates (HSA) performed an asbestos and lead-based paint (LBP) survey at the referenced property for the determination of asbestos and lead coated components. The survey was performed on January 4, 2000 by Robert Weitzel, California Certified Site Surveillance Technician (SST) and DHS accredited Lead Project Monitor. HSA's project manager was Jan Marie Bailey, Certified Asbestos Consultant (CAC) and DHS certified Lead Inspector/Assessor/Project Designer.

Thirty-nine (39) suspect asbestos containing bulk samples were collected and submitted to HSA's environmental and industrial hygiene laboratory for analysis via polarized light microscopy (PLM) with dispersion staining in accordance with EPA method number 600/R-93-116. The lower limit of detection for this method is one percent (1%) asbestos. The bulk asbestos sample results are found in Table I. The laboratory reports are found in Appendix B.

Thirteen (13) paint chip samples were also collected and submitted for analysis via inductively coupled argon plasma with atomic emission spectroscopy (ICAP, AES) in accordance with EPA method 6010. The paint chip sample results are located in Table II and are reported in percent by weight (%WT).

At the request of Mr. Jess Cummings on January 6, 2000, HSA submitted three stucco samples for quantification via Transmission Electron Microscopy (TEM) analysis.

The figure used to depict sampling locations is in Appendix A and the laboratory reports are found in Appendix B.

HSA's laboratory maintains accreditations by the American Industrial Hygiene Association (AIHA), the National Institute of Standards and Technology (NIST), the California Department of Health Services Environmental Laboratory Accreditation Program (ELAP), and AIHA's Environmental Lead Laboratory Accreditation Program (ELLAP).

10771 Noel St., Los Alamitos, CA 90720 714/220-3922 FAX 714/220-2081 e-mail hsa@earthlink.net

ASBESTOS STANDARDS AND GUIDELINES

ACM - Any material containing more than one percent asbestos (1%).

ACCM - Any manufactured construction material which contains more than one-tenth of one percent asbestos by weight (0.1%)

If the total amount of ACM to be abated is greater than 100 square feet, the following regulations must be met.

- *Labor Code 6501.5* requires the use of a state certified and registered asbestos abatement contractor for all asbestos removal project of more than 100 square feet of ACM or ACCM.

- *Federal Occupational Safety and Health Administration (OSHA) 29 CFR 1926.1101, California CCR Title 8 §1529 and 5208* require employers to monitor the exposure of their employees who may be exposed to asbestos. If employees are exposed above certain criteria the employer must take action to limit the employee's exposure to asbestos and to protect the employee's health. 29CFR 1926.1101 also lowered the permissible exposure limit (PEL) for asbestos to 0.1 fibers per cubic centimeter of air (f/cc) expressed as an eight hour time weighted average (TWA).

LEAD STANDARDS AND GUIDELINES

- The *Federal Department of Housing and Urban Development* (HUD) suggests abatement when XRF readings are at or above 1.0 mg/cm^2 or 0.5 WT% lead by weight via laboratory analysis.

- *California Department of Health Services* (DHS), Title 17 defines "Lead Based Paint" (LBP) as paint or other surface coatings that contain an amount of lead equal to, or in excess of 1.0 mg/cm^2 or 0.5 WT% lead by weight; "Lead Contaminated Dust" is defined as dust that contains an amount of lead equal to, or in excess of, 50 micrograms per square foot ($\mu g/ft^2$) for interior floor surfaces, 250 $\mu g/ft^2$ for interior horizontal window surfaces, and 800 $\mu g/ft^2$ for exterior floor and horizontal window surfaces. "Lead Contaminated Soil" is defined as bare soil that contains an amount of lead equal to, or in excess of, 400 parts per million (ppm) in children's play areas and 1000 ppm in all other areas. "Lead Hazard" is defined as deteriorated LBP, lead contaminated dust, lead contaminated soil, disturbing LBP or presumed LBP without containment, or any other nuisance which may result in persistent and quantifiable lead exposure.

- *Consumer Products Safety Commission's* (CPSC) definition of lead containing paint (LCP) is greater than 0.06 WT% lead by weight. In 1978 the CPSC banned lead in excess of 0.06 WT% for paint used in residences or on toys.

- *Title 8 CCR 1532.1, the Cal/OSHA Lead in Construction Standard*, establishes the requirements for worker protection. Conducting trigger task activities, exposure monitoring, containments for lead-related tasks, training and certification, respiratory protection, medical surveillance, et. al., are elements covered in the standard. Any trigger task performed on surfaces containing 0.06% (600 ppm) lead is covered by this regulation.

- *California CCR §5194, Hazard Communication Standard,* requires employers to notify their employees of hazardous material in their workplace.

SUMMARY

Asbestos Survey

Listed below are the materials that were determined to be ACM.

Kitchen Attic:
- 2" pipe insulation; and
- 4" pipe insulation.

Eating Area:
- Brown 9" X 9" floor tile and mastic.

Exterior
- Black roof vent mastic.
- Stucco was determined to be ACCM via TEM analysis. The material must be removed by a licensed asbestos abatement contractor utilizing dust control measures. The material may be disposed as normal construction debris.

LBP Survey

The green paint on the main entrance door and the exterior south side window was determined to be LBP. The green paint on the interior south upper wall, white paint on the interior north window, the off white paint on the interior ceiling above the counter, the tan paint on the exterior south side eave, and the tan paint on the stucco was determined to be LCP.

RECOMMENDATIONS

It is our understanding that the cafeteria is scheduled for demolition. Since there is greater than 100 square feet of ACM it will have to be removed by a state certified and registered asbestos abatement contractor in accordance with all local, state, and federal regulations prior to the demolition.

LBP and LCP was also detected in the cafeteria. Orange County Fair is required to notify the demolition contractor that LBP and LCP was detected on the components listed above. The contractor is required to be in compliance with CCR Title 8, Section 1532.1. The waste

generated from the demolition of the LBP components will have to be tested prior to disposal to determine its hazardous waste classification, if any.

HSA did not perform extensive demolition or intrusive sampling to locate potential materials within walls or to locate any other hidden ACM or ACCM materials. Additional amounts of ACM or ACCM may be uncovered during the renovation phase of the project. Therefore, all contractors working on the project should be notified of the Orange County Fair's policies regarding the discovery of unidentified hazardous materials.

It is also prudent for the property owners to engage the services of a Certified Industrial Hygienist (CIH) who is also a Certified Lead Professional (CLP) with appropriate experience to design, manage, and monitor such projects. HSA can provide these services.

For any questions regarding this report or if we can be of further service, please call me at (714) 220 - 3922.

Sincerely,

Jan Marie Bailey, CAC
Manager, Lead and Asbestos Services

Reviewed by,

Howard B. Spielman, PE, CIH, CSP,
REHS, CAC
Principal

Health Science Associates

TECHNICAL AND ADVISORY SERVICES • ENVIRONMENTAL HEALTH AND SAFETY
10771 Noel St., Los Alamitos, CA 90720 714/220-3922 FAX 714/220-2081

TABLE I
BULK ASBESTOS SAMPLING RESULTS

Cafeteria Building
Orange County Fair & Exposition Center
88 Fair Drive
Costa Mesa, CA 92626

January 4, 2000

Sample Number 00LA135	Location/Description (see Figures 1 & 2)	Asbestos Results Type and Percent (%)
0104 - 1-1	Attic Above Kitchen/2" Pipe Insulation	Chrysotile: 60%
0104 - 1-2	Attic Above Kitchen/2" Pipe Insulation	Chrysotile: 60%
0104 - 1-3	Attic Above Kitchen/2" Pipe Insulation	Chrysotile: 60%
0104 - 2-1	Attic Above Kitchen/4" Pipe Insulation	Chrysotile: 15% Amosite: 50%
0104 - 2-2	Attic Above Kitchen/4" Pipe Insulation	Chrysotile: 15% Amosite: 50%
0104 - 2-3	Attic Above Kitchen/4" Pipe Insulation	Chrysotile: 15% Amosite: 50%
0104 - 3-1	Attic Above Kitchen North Wall/Felt Paper	BLD
0104 - 3-2	Attic Above Kitchen North Wall/Felt Paper	BLD
0104 - 3-3	Attic Above Kitchen North Wall/Felt Paper	BLD
0104 - 4-1	Eating Area/9 x 9 Brown Floor Tile & Black Mastic	1. Tile: Chrysotile: 2% 2. Mastic: Chrysotlie: 2%
0104 - 4-2	Eating Area/9 x 9 Brown Floor Tile & Black Mastic	1. Tile: Chrysotile: 2% 2. Mastic: Chrysotile: 1%
0104 - 4-3	Eating Area/9 x 9 Brown Floor Tile & Black Mastic	1. Tile: Chrysotile: 2% 2. Mastic: Chrysotile 1%
0104 - 5-1	Behind Counter Entrance to Kitchen/Tan Linoleum	BLD
0104 - 5-2	Behind Counter Entrance to Kitchen/Tan Linoleum	BLD
0104 - 5-3	Behind Counter Entrance to Kitchen/Tan Linoleum	BLD
0104 - 6-1	Behind Counter East End/Tan Linoleum	BLD
0104 - 6-2	Behind Counter East End/Tan Linoleum	BLD
0104 - 6-3	Behind Counter East End/Tan Linoleum	BLD
0104 - 7-1	Patio Off Kitchen/12 x 12 Tan Floor Tile & Brown Mastic	BLD
0104 - 7-2	Patio Off Kitchen/12 x 12 Tan Floor Tile & Brown Mastic	BLD

Health Science Associates

TECHNICAL AND ADVISORY SERVICES • ENVIRONMENTAL HEALTH AND SAFETY
10771 Noel St., Los Alamitos, CA 90720 714/220-3922 FAX 714/220-2081

TABLE I Cont'd
BULK ASBESTOS SAMPLING RESULTS

Cafeteria Building
Orange County Fair & Exposition Center
88 Fair Drive
Costa Mesa, CA 92626

January 4, 2000

Sample Number 00LA135	Location/Description (see Figures 1 & 2)	Asbestos Results Type and Percent (%)
0104 - 7-3	Patio Off Kitchen/12 x 12 Tan Floor Tile & Brown Mastic	BLD
0104 - 8-1	South Upper Wall/Drywall Core	BLD
0104 - 8-2	South Upper Wall/Drywall Core	BLD
0104 - 8-3	South Upper Wall/Drywall Core	BLD
0104 - 9-1	Exterior South Windows/Window Putty	BLD
0104 - 9-2	Exterior South Windows/Window Putty	BLD
0104 - 9-3	Exterior South Windows/Window Putty	BLD
0104 - 10-1	Exterior West Side/Stucco	Chrysotile: 1% (.15% by TEM)
0104 - 10-2	Exterior West Side/Stucco	Chrysotile: 1% (.17% by TEM)
0104 - 10-3	Exterior West Side/Stucco	Chrysotile: 1% (.14% by TEM)
0104 - 11-1	Roof/Flat Rolled Grey/Roof Core	BLD
0104 - 11-2	Roof/Flat Rolled Grey/Roof Core	BLD
0104 - 11-3	Roof/Flat Rolled Grey/Roof Core	BLD
0104 - 12-1	Roof/Flat Rolled Grey/Roof Core	BLD
0104 - 12-2	Roof/Flat Rolled Grey/Roof Core	BLD
0104 - 12-3	Roof/Flat Rolled Grey/Roof Core	BLD
0104 - 13-1	Roof Vent/Black Mastic	Chrysotile: 8%
0104 - 13-2	Roof Vent/Black Mastic	Chrysotile: 10%
0104 - 13-3	Roof Vent/Black Mastic	Chrysotile: 10%

Standards	
EPA - ACM and ACBM	1.0
State of California - ACCM	0.1

Abbreviations: BLD = Below the limit of detection; < = less than; % - percent; EPA = Environmental Protection Agency; ACM = Asbestos Containing Material; ACBM = Asbestos Containing Building Material; ACCM = Asbestos Containing Construction Material

Health Science Associates

TECHNICAL AND ADVISORY SERVICES • ENVIRONMENTAL HEALTH AND SAFETY
10771 Noel St., Los Alamitos, CA 90720 714/220-3922 FAX 714/220-2081

TABLE II
LEAD BASED PAINT SURVEY RESULTS

Cafeteria Building
Orange County Fair & Exposition Center
88 Fair Drive
Costa Mesa, CA 92626

January 4, 2000

Sample Number 00LA135	Location/Description (See Figure 3)	Laboratory Results Lead WT%
0104 - 01PC	Front Door/Dark Green Paint	3.0
0104 - 02PC	Interior South Upper Wall/Green Paint	0.10
0104 - 03PC	Interior North Window/White Paint	0.093
0104 - 04PC	Interior Ceiling Above Counter/Off White Paint	0.022
0104 - 05PC	Interior/Kitchen Doors/Off White Paint	<0.01
0104 - 06PC	Interior Kitchen Walls/Off White Paint	<0.01
0104 - 07PC	Interior Kitchen Floor/Grey Paint	<0.01
0104 - 08PC	Exterior South Side Hand Rail/Dark Green Paint	0.01
0104 - 09PC	Exterior South Side Window/Dark Green Paint	0.53
0104 - 10PC	Exterior South Side Eaves/Tan Paint	0.23
0104 - 11PC	Exterior Door on Patio to Kitchen/White Paint	<0.01
0104 - 12PC	Exterior Patio Cover Frame/Flat White Paint	<0.01
0104 - 13PC	Exterior/South Wall on Stucco/Tan Paint	0.029
Standards		
Consumer Products Safety Commission		0.06
HUD Guidelines, June, 1995		0.5

Abbreviations: WT% = weight by percent; BLD = below the limit of detection; < = less than

APPENDIX A
FIGURES

Figure 1	Project: 00LA135

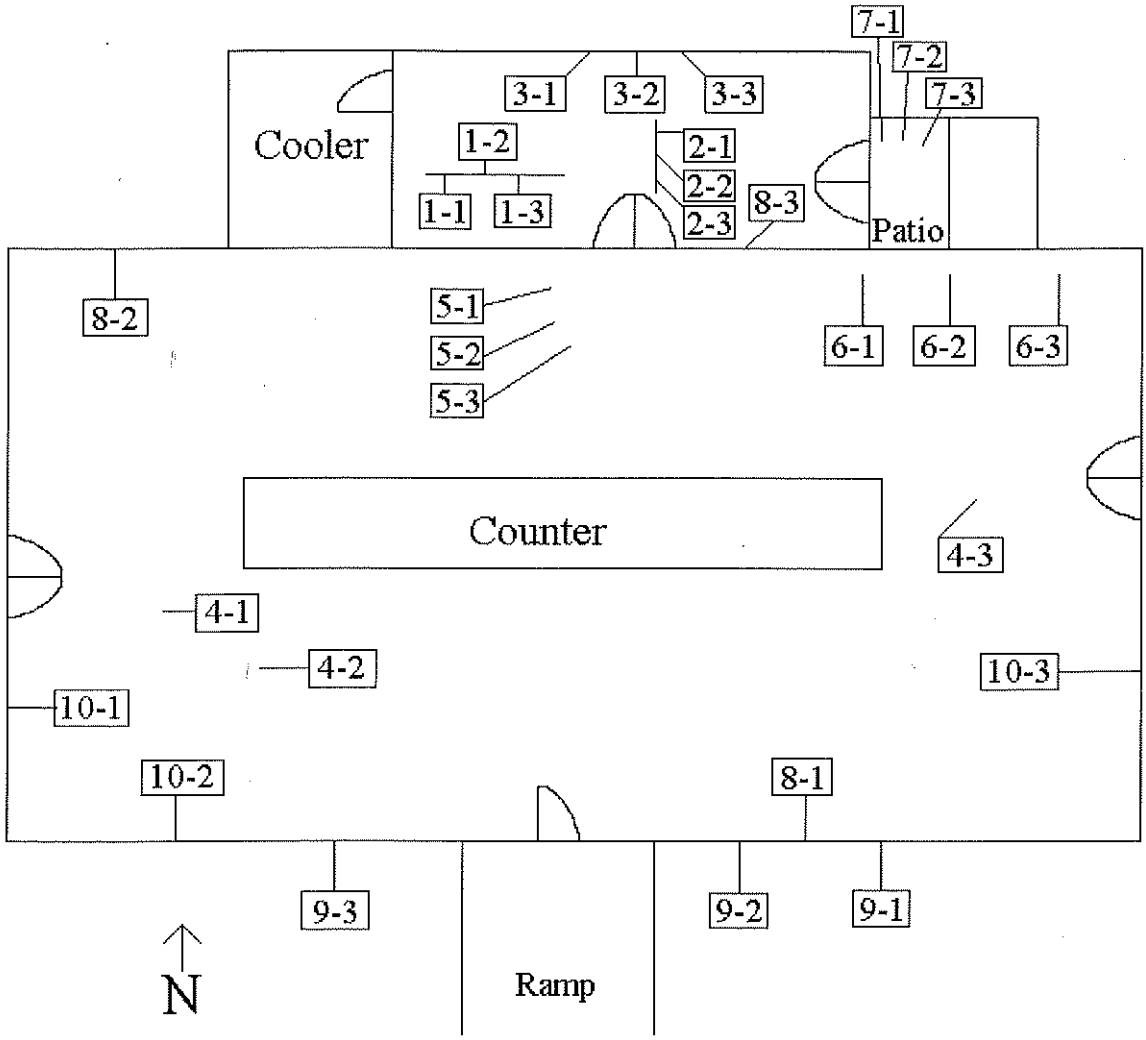

Please note: Figure not to scale

Originator: B. Weitzel	Date(s) Covered: January 4, 2000
Orange County Fair Cafeteria Room	Health Science Associates

Figure 2	Project: 00LA135

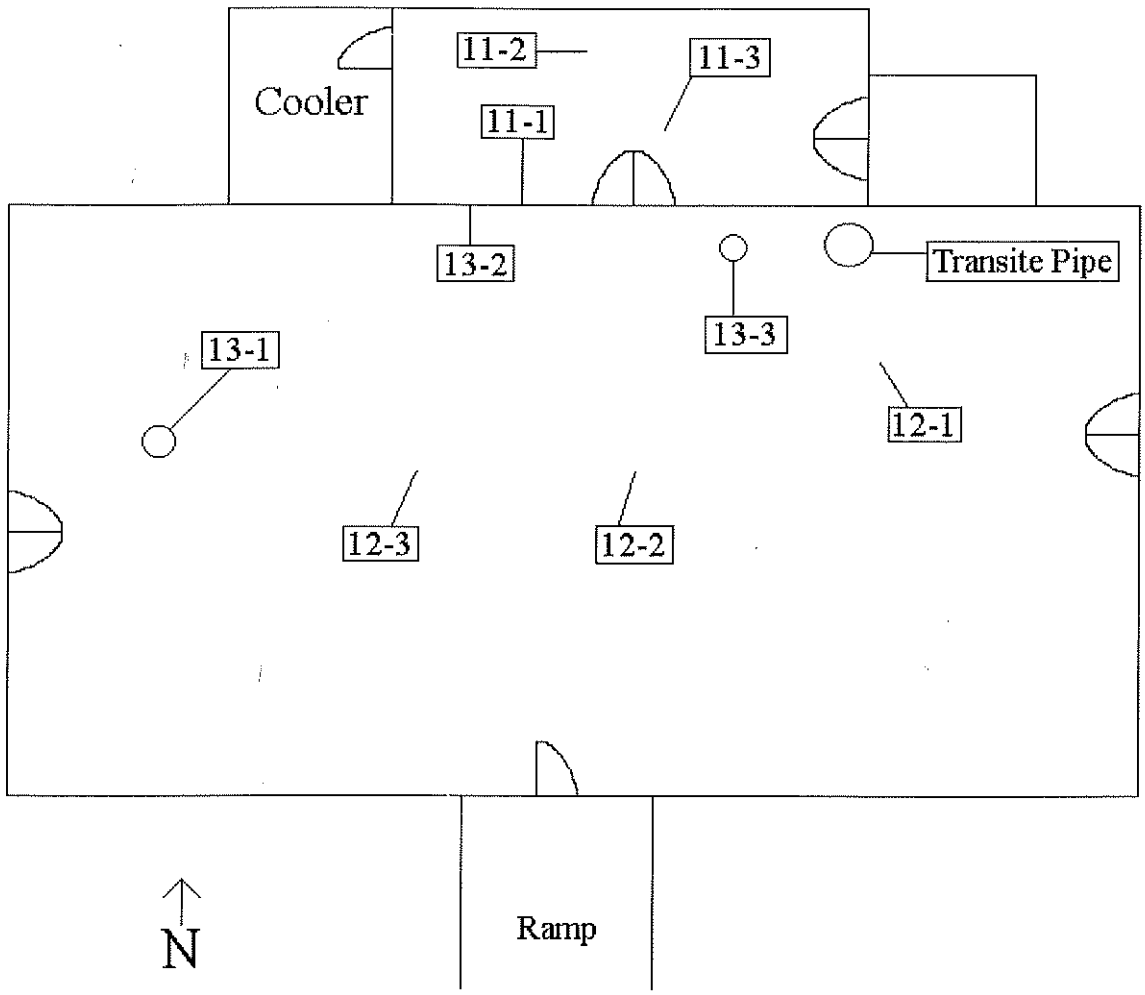

Please note: Figure not to scale

Originator: B. Weitzel	Date(s) Covered: January 4, 2000
Orange County Fair Cafeteria Building	Health Science Associates

Figure 3	Project: 00LA135

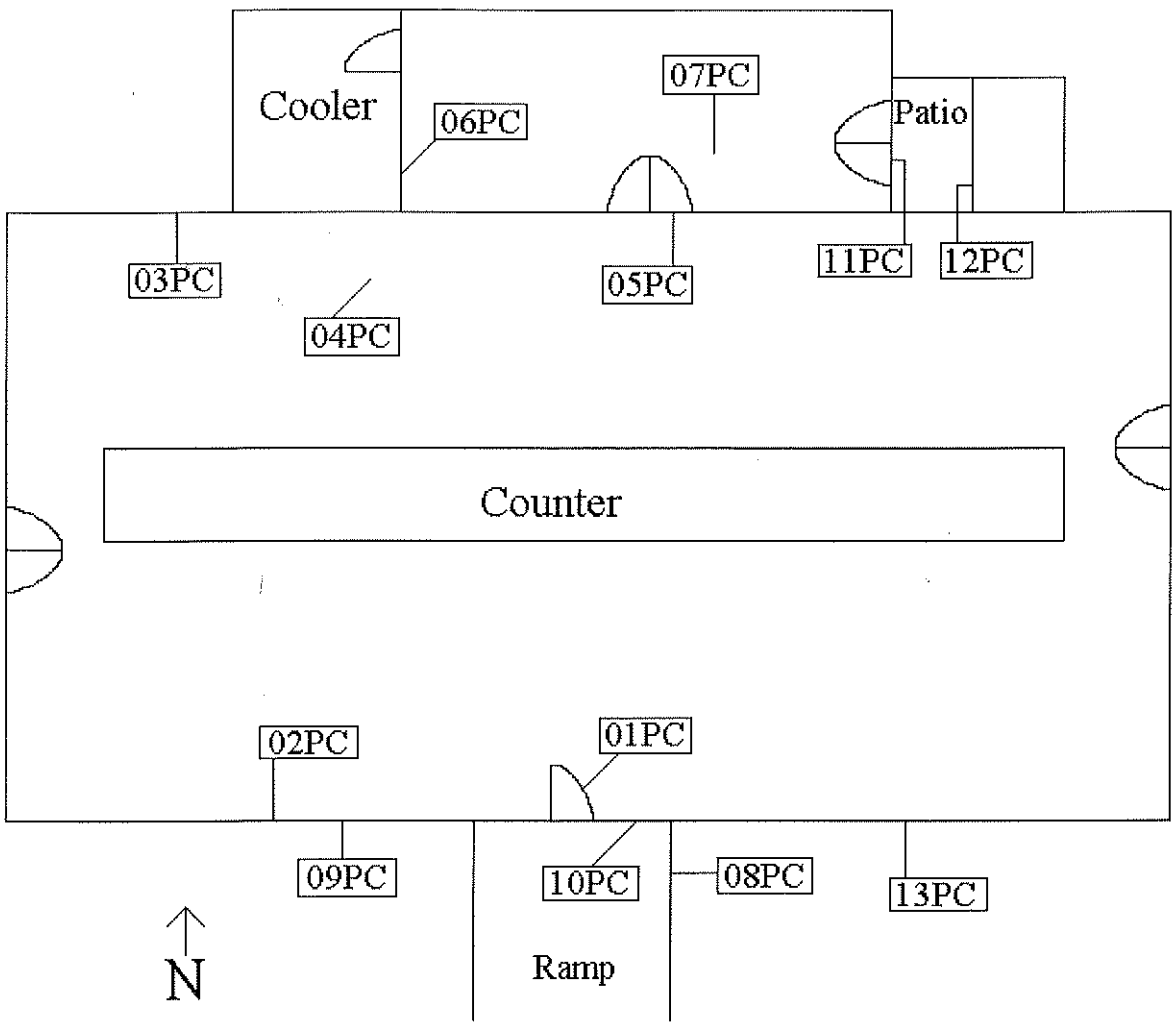

Please note: Figure not to scale

Originator: B. Weitzel	Date(s) Covered: January 4, 2000
Orange County Fair Grounds Cafeteria Building	Health Science Associates

APPENDIX B
LABORATORY REPORTS

Health Science Associates

LABORATORY REPORT

Report No.: 101064
Project Number: 00LA135
External No.: CAFETERIA

JIM WILLIAMS
ORANGE COUNTY FAIR GROUNDS
88 FAIR DRIVE
COSTA MESA CA 92626

Date Received: 04-JAN-00
Date Completed: 05-JAN-00
Date Sent: 05-JAN-00

Analytical Method: EPA 600/R-93-116

RESULTS TABLE
Sample Count (21) / Separable Layers (27)

Sample No.	Description	Sample Homogeneity	Asbestos Fibers	Nonasbestos Fibers
1-1 (208495)	WHITE INSULATION	COMPOSITE	CHRYSOTILE : 60 %	CELLULOSE : 25 %
1-2 (208496)	WHITE INSULATION	COMPOSITE	CHRYSOTILE : 60 %	CELLULOSE : 25 %
1-3 (208497)	WHITE INSULATION	COMPOSITE	CHRYSOTILE : 60 %	CELLULOSE : 25 %
2-1 (208498)	WHITE W/ GRAY INSULATION	COMPOSITE	CHRYSOTILE : 15 % AMOSITE : 50 %	CELLULOSE : 5 %
2-2 (208499)	WHITE W/ GRAY INSULATION	COMPOSITE	CHRYSOTILE : 15 % AMOSITE : 50 %	CELLULOSE : 5 %
2-3 (208500)	WHITE INSULATION	COMPOSITE	CHRYSOTILE : 15 % AMOSITE : 50 %	CELLULOSE : 5 %
3-1 (ashed) (208501)	BLACK W/ TAN TARRY FELT STRIP	COMPOSITE	BELOW LIMIT OF DETECTION	
3-2 (ashed) (208502)	BLACK W/ TAN TARRY FELT STRIP	COMPOSITE	BELOW LIMIT OF DETECTION	
3-3 (ashed) (208503)	BLACK W/ TAN TARRY FELT STRIP	COMPOSITE	BELOW LIMIT OF DETECTION	

10771 Noel St., Los Alamitos, CA 90720 714/220-3922 FAX 714/220-2081 e-mail hsa@earthlink.net

This report pertains only to the samples investigated and does not necessarily apply to other apparently identical or similar materials. This report is submitted for the exclusive use of the client to whom it is addressed. Any reproduction of this report or use of this Laboratory's name for advertising or publicity purposes without written authorization is prohibited.

Health Science Associates

LABORATORY REPORT

Analytical Method: EPA 600/R-93-116

RESULTS TABLE
Sample Count (21) / Separable Layers (27)

Sample No.	Description	Sample Homogeneity	Asbestos Fibers	Nonasbestos Fibers
4-1 (ashed) (208504)	BROWN W/ BLACK VINYL FLOOR TILE W/ MASTIC	1. TILE: 98 %	CHRYSOTILE : 2 %	
		2. MASTIC: 2 %	CHRYSOTILE : 2 %	
4-2 (ashed) (208505)	BROWN W/ BLACK VINYL FLOOR TILE W/ MASTIC	1. TILE: 98 %	CHRYSOTILE : 2 %	
		2. MASTIC: 2 %	CHRYSOTILE : 1 %	
4-3 (ashed) (208506)	BROWN W/ BLACK VINYL FLOOR TILE W/ MASTIC	1. TILE: 98 %	CHRYSOTILE : 2 %	
		2. MASTIC: 2 %	CHRYSOTILE : 1 %	
5-1 (208507)	WHITE W/ TAN LINOLEUM	COMPOSITE	BELOW LIMIT OF DETECTION	FIBROUS GLASS : 10 % SYNTHETIC : 10 %
5-2 (208508)	WHITE W/ TAN LINOLEUM	COMPOSITE	BELOW LIMIT OF DETECTION	FIBROUS GLASS : 10 % SYNTHETIC : 10 %
5-3 (208509)	WHITE W/ TAN LINOLEUM	COMPOSITE	BELOW LIMIT OF DETECTION	FIBROUS GLASS : 10 % SYNTHETIC : 10 %
6-1 (208510)	WHITE W/ TAN LINOLEUM	COMPOSITE	BELOW LIMIT OF DETECTION	FIBROUS GLASS : 10 % SYNTHETIC : 10 %
6-2 (208511)	WHITE W/ TAN LINOLEUM	COMPOSITE	BELOW LIMIT OF DETECTION	FIBROUS GLASS : 10 % SYNTHETIC : 10 %
6-3 (208512)	WHITE W/ TAN LINOLEUM	COMPOSITE	BELOW LIMIT OF DETECTION	FIBROUS GLASS : 10 % SYNTHETIC : 10 %

10771 Noel St., Los Alamitos, CA 90720 714/220-3922 FAX 714/220-2081 e-mail hsa@earthlink.net

This report pertains only to the samples investigated and does not necessarily apply to other apparently identical or similar materials. This report is submitted for the exclusive use of the client to whom it is addressed. Any reproduction of this report or use of this Laboratory's name for advertising or publicity purposes without written authorization is prohibited.

Health Science Associates

LABORATORY REPORT

Report No.: 101064

Analytical Method: EPA 600/R-93-116

RESULTS TABLE
Sample Count (21) / Separable Layers (27)

Sample No.	Description	Sample Homogeneity	Asbestos Fibers	Nonasbestos Fibers
7-1 (ashed) (208513)	BEIGE W/ TAN VINYL FLOOR TILE W/ MASTIC	1. TILE: 99 %	BELOW LIMIT OF DETECTION *	
		2. MASTIC: 1 %	BELOW LIMIT OF DETECTION	CELLULOSE : <1 %
7-2 (ashed) (208514)	BEIGE W/ TAN VINYL FLOOR TILE W/ MASTIC	1. TILE: 98 %	BELOW LIMIT OF DETECTION *	
		2. MASTIC: 2 %	BELOW LIMIT OF DETECTION	CELLULOSE : <1 %
7-3 (ashed) (208515)	BEIGE W/ TAN VINYL FLOOR TILE W/ MASTIC	1. TILE: 99 %	BELOW LIMIT OF DETECTION *	
		2. MASTIC: 1 %	BELOW LIMIT OF DETECTION	CELLULOSE : <1 %

* Analysis of floor tiles by EPA 600/R-93/116 may produce false negative results. HSA recommends utilizing an alternative method such as transmission electron microscopy.

Remarks : Sample(s) and sampling data as provided by BOB WEITZEL

Analyst : DRB - JMB / JMB

Reviewed by: Donald R Bissing
Asbestos PLM Supervisor, Donald R. Bissing, PhD

Technical Approval: Jaime Steedman-Lyde
Laboratory Director, Jaime Steedman-Lyde

AIHA ELLAP Accreditation No.: 10985
AIHA Accreditation No.: 172
California ELAP No.: 1406
NVLAP Accreditation No.: 101384

10771 Noel St., Los Alamitos, CA 90720 714/220-3922 FAX 714/220-2081 e-mail hsa@earthlink.net

This report pertains only to the samples investigated and does not necessarily apply to other apparently identical or similar materials. This report is submitted for the exclusive use of the client to whom it is addressed. Any reproduction of this report or use of this Laboratory's name for advertising or publicity purposes without written authorization is prohibited.

Health Science Associates

LAB Job No.: _____ HSA Project No.: 00LA135 Batch No.: _____

Urgent = 4-8 hours
Priority = 24-48 hours
Routine = 3-5 days

Client: JESS CUMMINGS Project: ORANGE COUNTY FAIR/ CAFETERIA

Date: 01-04-00 Project Manager: JAN BAILEY Ind. Hyg.: B.W.

Auto Sample Number	Submitter Number	Location/Description	Condition/Type (circle one)		Quanity square/linear footage	Lab Result
208502	3-2	ATTIC ABOUE KITCHEN NORTH WALL/ FELT PAPER	F (NF) D SD (G)	TSI (M) SM SC		
208503	3-3	ATTIC ABOUE KITCHEN NORTH WALL/ FELT PAPER	F (NF) D SD (G)	TSI (M) SM SC		
208504	4-1	EATING AREA/9X9 BROWN FLOOR TILE & BLACK MASTIC	F (NF) D SD (G)	TSI (M) SM SC		
208505	4-2	EATING AREA/9X9 BROWN FLOOR TILE & BLACK MASTIC	F (NF) D SD (G)	TSI (M) SM SC		
208506	4-3	EATING AREA/9X9 BROWN FLOOR TILE & BLACK MASTIC	F (NF) D SD (G)	TSI (M) SM SC		
208507	5-1	BEHIND COUNTER ENTERANCE TO KITCHEN/ TAN LINOLEUM	F (NF) D SD (G)	TSI (M) SM SC		
208508	5-2	BEHIND COUNTER ENTERANCE TO KITCHEN/ TAN LINOLEUM	F (NF) D SD (G)	TSI (M) SM SC		

Conditions: F = Friable; NF = Non-friable; SD = Significantly Damaged >10% surface damage; D = Damaged <10% surface damage; G = Good Condition; Type: TSI = Thermal System Insulation; M = Miscellaneous Materials; SC = Spray On Coatings; SM = Surfacing Materials

Chain of Custody Record:

Released by: B. WATTER Date: _____ Time: _____

Received at Lab by: _____ Date: _____ Time: _____

Notes:

Science Associates

LAB Job No.: _____ HSA Project No.: 00LA135 Batch No.: _____

Urgent = 4-8 hours
Priority = 24-48 hours
Routine = 3-5 days

Client: JESS CUMMINGS Project: ORANGE COUNTY FAIR/CAFETERIA

Date: 01-04-00 Project Manager: JAN BAILEY Ind. Hyg.: B.W.

Auto Sample Number	Submitter Number	Location/Description	Condition/Type (circle one)		Quanity square/linear footage	Lab Result
208509	5-3	BEHIND COUNTER ENTERANCE TO KITCHEN/ TAN LINOLEUM	F (NF) D SD (G)	TSI (M) SM SC		
208510	6-1	BEHIND COUNTER EAST END/ TAN LINOLEUM	F (NF) D SD (G)	TSI (M) SM SC		
208511	6-2	BEHIND COUNTER EAST END/ TAN LINOLEUM	F (NF) D SD (G)	TSI (M) SM SC		
208512	6-3	BEHIND COUNTER EAST END/ TAN LINOLEUM	F (NF) D SD (G)	TSI (M) SM SC		
208513	7-1	PATIO OFF KITCHEN/ 12x12 TAN FLOOR TILE & BROWN MASTIC	F (NF) (D) SD G	TSI (M) SM SC		
208514	7-2	PATIO OFF KITCHEN/ 12x12 TAN FLOOR TILE & BROWN MASTIC	F (NF) (D) SD G	TSI (M) SM SC		
208515	7-3	PATIO OFF KITCHEN/ 12x12 TAN FLOOR TILE & BROWN MASTIC	F (NF) (D) SD G	TSI (M) SM SC		

Condition: F = Friable; NF = Non-friable; SD = Significantly Damaged >10% surface damage; D = Damaged <10% surface damage; G = Good Condition; Type: TSI = Thermal System Insulation; M = Miscellaneous Materials; SC = Spray On Coatings; SM = Surfacing Materials

Chain of Custody Record:

Released by: B. WEITZEL Date: _____ Time: _____

Received at Lab by: _____ Date: _____ Time: _____

Notes:

Health Science Associates

LABORATORY REPORT

Report No.: 101065
Project Number: 00LA135
External No.: CAFETERIA

JIM WILLIAMS
ORANGE COUNTY FAIR GROUNDS
88 FAIR DRIVE
COSTA MESA CA 92626

Date Received: 04-JAN-00
Date Completed: 05-JAN-00
Date Sent: 05-JAN-00

Analytical Method: EPA 600/R-93-116

RESULTS TABLE
Sample Count (18) / Separable Layers (18)

Sample No.	Description	Sample Homogeneity	Asbestos Fibers	Nonasbestos Fibers
8-1 (208516)	GREEN/TAN/WHITE DRYWALL	COMPOSITE	BELOW LIMIT OF DETECTION	CELLULOSE : 25 %
8-2 (208517)	GREEN/TAN/WHITE DRYWALL	COMPOSITE	BELOW LIMIT OF DETECTION	CELLULOSE : 40 %
8-3 (208518)	BEIGE/TAN DRYWALL	COMPOSITE	BELOW LIMIT OF DETECTION	CELLULOSE : 40 %
9-1 (ashed) (208519)	GREEN PUTTY	COMPOSITE	BELOW LIMIT OF DETECTION	
9-2 (ashed) (208520)	GREEN PUTTY	COMPOSITE	BELOW LIMIT OF DETECTION	
9-3 (ashed) (208521)	GREEN PUTTY	COMPOSITE	BELOW LIMIT OF DETECTION	
10-1 (208522)	BEIGE/YELLOW STUCCO	COMPOSITE	CHRYSOTILE : <1 %	
10-2 (208523)	BEIGE/YELLOW STUCCO	COMPOSITE	CHRYSOTILE : <1 %	
10-3 (208524)	BEIGE/YELLOW STUCCO	COMPOSITE	CHRYSOTILE : <1 %	

10771 Noel St., Los Alamitos, CA 90720 714/220-3922 FAX 714/220-2081 e-mail hsa@earthlink.net

This report pertains only to the samples investigated and does not necessarily apply to other apparently identical or similar materials. This report is submitted for the exclusive use of the client to whom it is addressed. Any reproduction of this report or use of this Laboratory's name for advertising or publicity purposes without written authorization is prohibited.

Health Science Associates

LABORATORY REPORT

Report No.: 101065

Analytical Method: EPA 600/R-93-116

RESULTS TABLE
Sample Count (18) / Separable Layers (18)

Sample No.	Description	Sample Homogeneity	Asbestos Fibers	Nonasbestos Fibers
11-1 (ashed) (208525)	BLACK/GRAY ROOFING	COMPOSITE	BELOW LIMIT OF DETECTION	FIBROUS GLASS : 12 %
11-2 (ashed) (208526)	BLACK/GRAY ROOFING	COMPOSITE	BELOW LIMIT OF DETECTION	FIBROUS GLASS : 12 %
11-3 (ashed) (208527)	BLACK/GRAY ROOFING	COMPOSITE	BELOW LIMIT OF DETECTION	FIBROUS GLASS : 12 %
12-1 (ashed) (208528)	BLACK/RED ROOFING	COMPOSITE	BELOW LIMIT OF DETECTION	FIBROUS GLASS : 15 %
12-2 (ashed) (208529)	BLACK/RED ROOFING	COMPOSITE	BELOW LIMIT OF DETECTION	FIBROUS GLASS : 15 %
12-3 (ashed) (208530)	BLACK/RED ROOFING	COMPOSITE	BELOW LIMIT OF DETECTION	FIBROUS GLASS : 15 %
13-1 (ashed) (208531)	BLACK MASTIC	COMPOSITE	CHRYSOTILE : 8 %	

10771 Noel St., Los Alamitos, CA 90720 714/220-3922 FAX 714/220-2081 e-mail hsa@earthlink.net

This report pertains only to the samples investigated and does not necessarily apply to other apparently identical or similar materials. This report is submitted for the exclusive use of the client to whom it is addressed. Any reproduction of this report or use of this Laboratory's name for advertising or publicity purposes without written authorization is prohibited.

Health Science Associates

LABORATORY REPORT

Report No.: 101065

Analytical Method: EPA 600/R-93-116

RESULTS TABLE
Sample Count (18) / Separable Layers (18)

Sample No.	Description	Sample Homogeneity	Asbestos Fibers	Nonasbestos Fibers
13-2 (ashed) (208532)	BLACK MASTIC	COMPOSITE	CHRYSOTILE : 10 %	
13-3 (ashed) (208533)	BLACK MASTIC	COMPOSITE	CHRYSOTILE : 10 %	

Remarks : Sample(s) and sampling data as provided by BOB WEITZEL

Analyst : JMB / LAN

Reviewed by: Donald R. Bissing
Asbestos PLM Supervisor, Donald R. Bissing, PhD

AIHA ELLAP Accreditation No.: 10985
AIHA Accreditation No.: 172
California ELAP No.: 1406
NVLAP Accreditation No.: 101384

Technical Approval: Jaime Steedman-Lyde
Laboratory Director, Jaime Steedman-Lyde

10771 Noel St., Los Alamitos, CA 90720 714/220-3922 FAX 714/220-2081 e-mail hsa@earthlink.net

This report pertains only to the samples investigated and does not necessarily apply to other apparently identical or similar materials. This report is submitted for the exclusive use of the client to whom it is addressed. Any reproduction of this report or use of this Laboratory's name for advertising or publicity purposes without written authorization is prohibited.

Science Associates

LAB Job No.: 1010 1125 HSA Project No.: 00LA135 Batch No.: 48 H

Urgent = 4-8 hours
Priority = 24-48 hours
Routine = 3-5 days

Client: JESS CUMMINGS Project: ORANGE COUNTY FAIR/ CAFETL

Date: 01-04-00 Project Manager: JAN BAILEY Ind. Hyg.: B.W.

Auto Sample Number	Submitter Number	Location/Description	Condition/Type (circle one)		Quanity square/linear footage	Lab Result
208516	8-1	SOUTH UPPER WALL/ DRYWALL CORE	F NF D SD G	TSI M SM SC		
208517	8-2	NORTHWEST UPPER WALL/ DRYWALL CORE	F NF D SD G	TSI M SM SC		
208518	8-3	KITCHEN ~~NORTH~~ SOUTH EAST WALL/ DRYWALL CORE	F NF D SD G	TSI M SM SC		
208519	9-1	EXTERIOR ~~NORTH~~ SOUTH WINDOWS/ WINDOW PUTTY	F NF D SD G	TSI M SM SC		
208520	9-2	EXTERIOR SOUTH WINDOWS/ WINDOW PUTTY	F NF D SD G	TSI M SM SC		
208521	9-3	EXTERIOR SOUTH WINDOWS/ WINDOW PUTTY	F NF D SD G	TSI M SM SC		
208522	10-1	EXTERIOR WEST SIDE/ STUCCO	F NF D SD G	TSI M SM SC		

Condition: F = Friable; NF = Non-friable; SD = Significantly Damaged >10% surface damage; D = Damaged <10% surface damage; G = Good Condition; Type: TSI = Thermal System Insulation; M = Miscellaneous Materials; SC = Spray On Coatings; SM = Surfacing Materials

Chain of Custody Record:

Released by: B. WEITZEL Date: _____ Time: _____

Received at Lab by: [signature] Date: 010400 Time: 1120A

Notes:

Science Associates

LAB Job No.: _____ HSA Project No.: 00LA135 Batch No.: _____

Urgent = 4-8 hours
Priority = 24-48 hours
Routine = 3-5 days

Client: JESS CUMMINGS Project: ORANGE COUNTY FAIR/ CAFETRIA

Date: 01-04-99 Project Manager: JAN BAILEY Ind. Hyg.: B.W.

Auto Sample Number	Submitter Number	Location/Description	Condition/Type (circle one)		Quanity square/linear footage	Lab Result
208523	10-1	EXTERIOR SOUTH SIDE/ STUCCO	F (NF) D SD (G)	TSI M (SM) SC		
208524	10-3	EXTERIOR EAST SIDE/ STUCCO	F (NF) D SD (G)	TSI M (SM) SC		
208525	11-1	ROOF / FLAT ROLLED GREY/ ROOF CONC	F (NF) D SD (G)	TSI (M) SM SC		
208526	11-2	ROOF/ FLAT ROLLED GREY/ ROOF CONC	F (NF) D SD (G)	TSI (M) SM SC		
208527	11-3	ROOF/ FLAT ROLLED GREY/ ROOF CONC	F (NF) D SD (G)	TSI (M) SM SC		
208528	12-1	ROOF/ RED SHINGLES/ ROOF CONC	F (NF) D SD (G)	TSI (M) SM SC		
208529	12-2	ROOF/ RED SHINGLES/ ROOF CONC	F (NF) D SD (G)	TSI (M) SM SC		

Conditions: F = Friable; NF = Non-friable; SD = Significantly Damaged >10% surface damage; D = Damaged <10% surface damage; G = Good Condition; Type: TSI = Thermal System Insulation; M = Miscellaneous Materials; SC = Spray On Coatings; SM = Surfacing Materials

Chain of Custody Record:

Released by: B. WETZEL Date: _____ Time: _____

Received at Lab by: _____ Date: _____ Time: _____

Notes:

Science Associates

LAB Job No.: _____ HSA Project No.: 00LA135 Batch No.: _____

Urgent = 4-8 hours
Priority = 24-48 hours
Routine = 3-5 days

Client: JESS CUMMINGS Project: ORANGE COUNTY FAIR/CAFETRIA

Date: 01-04-00 Project Manager: JAN BAILEY Ind. Hyg.: B.W

Auto Sample Number	Submitter Number	Location/Description	Condition/Type (circle one)		Quanity square/linear footage	Lab Result
20852	12-3	ROOF/RED SHINGLES/ ROOF COND	F (NF) D SD (G)	TSI (M) SM SC		
20853	13-1	ROOF VENT/ BLACK MASTIC	F (NF) D SD (G)	TSI (M) SM SC		
20853	13-2	ROOF FLASHING/ BLACK MASTIC	F (NF) D SD (G)	TSI (M) SM SC		
20853	13-3	ROOF PIPE PENITRATION/ BLACK MASTIC	F (NF) D SD (G)	TSI (M) SM SC		
			F NF D SD G	TSI M SM SC		
			F NF D SD G	TSI M SM SC		
			F NF D SD G	TSI M SM SC		

Conditions: F = Friable; NF = Non-friable; SD = Significantly Damaged >10% surface damage; D = Damaged <10% surface damage; G = Good Condition; Type: TSI = Thermal System Insulation; M = Miscellaneous Materials; SC = Spray On Coatings; SM = Surfacing Materials

Chain of Custody Record:

Released by: B. WEITZEL Date: _____ Time: _____

Received at Lab by: _____ Date: _____ Time: _____

Notes:

Health Science Associates

LABORATORY REPORT

Report No.: 101078
Project Number: 00LA135
External No.:

JIM WILLIAMS
ORANGE COUNTY FAIR GROUNDS
88 FAIR DRIVE
COSTA MESA CA 92626

Date Received: 05-JAN-00
Date Completed: 10-JAN-00
Date Sent: 10-JAN-00

Type of Analysis: TRANSMISSION ELECTRON MICROSCOPY - ASBESTOS-IN-BULK MATERIAL

Analytical Method: EPA 600/R-93/116 Section 2.5.5.2 (Full Quantitative)

RESULTS TABLE
Sample Count (3)

Sample No.	Asbestos Type	WT%	Detection Limit
10-1 (208635)	CHRYSOTILE	0.15	0.0001 WT%
10-2 (208636)	CHRYSOTILE	0.17	0.0001 WT%
10-3 (208637)	CHRYSOTILE	0.14	0.0001 WT%

Remarks : Sample(s) and sampling data as provided by BOB WEITZEL

Analyst : HELI

Reviewed by: _____
PLM Supervisor, Donald R. Bissing, PhD

AIHA ELLAP Accreditation No.: 10985
AIHA Accreditation No.: 172
California ELAP No.: 1406
NVLAP Accreditation No.: 101384
LACSD Lab. No.: 10125

Technical Approval: _____
Laboratory Director, Jaime Steedman-Lyde

10771 Noel St., Los Alamitos, CA 90720 714/220-3922 FAX 714/220-2081 e-mail hsa@earthlink.net

This report pertains only to the samples investigated and does not necessarily apply to other apparently identical or similar materials. This report is submitted for the exclusive use of the client to whom it is addressed. Any reproduction of this report or use of this Laboratory's name for advertising or publicity purposes without written authorization is prohibited.

Health Science Associates

101078 TEM Bulk

RECEIVED JAN 0 5 2000

LABORATORY SUBMITTAL

Page 1 of 1

☐ Routine (10 working days)

24 H

☐ RUSH (surcharges may apply)
Circle One: 4 hours | 24 hours | 5 days

ORANGE County Fair

Submitter Name: HSA Project # 00LA135 Date: 1/5/00

Report to the attention of: Jess Cummins

Company: HSA PO No.:

Address:

City: State: Zip:

Billing address (if different):

Phone No.: FAX No.:

Lab No.:	Sample No.:	Media	Air Volume	Analyses Requested
208635	10-1	Bulk		Asbestos – TEM
208636	10-2	↓		↓
208637	10-3	↓		↓
			Full	QUANTITATIVE

Notes: See HSA JOB# 101065 for PCM ANALYSES

Relinquished by: Gerald R. Bussing Date: 01/05/00 Time: 1420 hr

Received by: Date: 010500 Time: 2209

Received in Lab by: Date: Time:

10771 Noel Street, Los Alamitos, CA 90720 714 220-3922 FAX 714 220-2081

Health Science Associates

LABORATORY REPORT

Report No.: 101066
Project Number: 00LA135
External No.: CAFETERIA

JIM WILLIAMS
ORANGE COUNTY FAIR GROUNDS
88 FAIR DRIVE
COSTA MESA CA 92626

Date Received : 04-JAN-00
Date Completed : 04-JAN-00
Date Sent : 25-JAN-00

Sample Description : 13- PAINT CHIP SAMPLES

Method of Analysis : Inductively Coupled Argon Plasma, Atomic Emission Spectroscopy (EPA 6010)

Method of Digestion : Microwave (EPA 3051 - modified)

Sample Number	Submitter Number	Location	Lead (WT%)	Lead (ppm)
208534	01PC	FRNT DR	3.2	32000
208535	02PC	INTR S UPPER WALL	0.10	1000
208536	03PC	INTR N WINDOW	0.093	930
208537	04PC	INTR CEILING-COUNTER	0.022	220
208538	05PC	INTR KITCH DR	<0.01	<100
208539	06PC	INTR KITCH WALLS	<0.01	<100
208540	07PC	INTR KITCH FLR	<0.01	<100
208541	08PC	EXTR S SIDE HANDRAIL	0.01	100
208542	09PC	EXTR S SIDE WINDOW	0.53	5300

10771 Noel St., Los Alamitos, CA 90720 714/220-3922 FAX 714/220-2081 e-mail hsa@earthlink.net

This report pertains only to the samples investigated and does not necessarily apply to other apparently identical or similar materials. This report is submitted for the exclusive use of the client to whom it is addressed. Any reproduction of this report or use of this Laboratory's name for advertising or publicity purposes without written authorization is prohibited.

Health Science Associates

LABORATORY REPORT

Report No.: 101066

Sample Description : 13- PAINT CHIP SAMPLES

Method of Analysis : Inductively Coupled Argon Plasma, Atomic Emission Spectroscopy (EPA 6010)

Method of Digestion : Microwave (EPA 3051 - modified)

Sample Number	Submitter Number	Location	Lead (WT%)	Lead (ppm)
208543	10PC	EXTR S SIDE EAVES	0.23	2300
208544	11PC	EXTR DR PATIO-KITCH	<0.01	<100
208545	12PC	EXTR PATIO COVER FRM	<0.01	<100
208546	13PC	EXTR S WALL-STUCCO	0.029	290
Detection Limit			0.01	100

The Consumer Products Safety Commission standard level for lead-based paint is more than 0.06% Lead Metal by weight. The Housing and Urban Development (HUD) Guidelines define lead-based paint as containing lead at or above 0.5% or 1.0 mg/cm2.

Remarks : Sample(s) and sampling data as provided by BOB WEITZEL

Analyst : TB

Ref : TB_1066

Reviewed by: Jaime Steedman-Lyde

Technical Approval: Laboratory Director, Jaime Steedman-Lyde

California ELAP No.: 1406
AIHA Accreditation No.: 172
NVLAP Accreditation No.: 101384
AIHA ELLAP Accreditation No.: 10985
LACSD Lab No.: 10125

10771 Noel St., Los Alamitos, CA 90720 714/220-3922 FAX 714/220-2081 e-mail hsa@earthlink.net

This report pertains only to the samples investigated and does not necessarily apply to other apparently identical or similar materials. This report is submitted for the exclusive use of the client to whom it is addressed. Any reproduction of this report or use of this Laboratory's name for advertising or publicity purposes without written authorization is prohibited.

Health Science Associates

101066 PB PNT-D

LEAD SAMPLE DATA SHEET

HSA Project No.: 00LA135 Project: ORANGE COUNTY FAIR CAFETERIA 4

Client: JESS CUMMINGS Batch No.: H

Circle One
Rush = 4 Hours
Priority = 24 Hours
Routine = 5 Days

Date: 01-04-00 Project Mgr.: JAN BAILEY Ind.Hyg.: B.W.

Sample No.	Media	Location/Description	Notes/Instructions
208534 01PC 0.102	PAINT CHIP	FRONT DOOR / DARK GREEN PAINT	
208535 02PC 0.103		INTERIOR SOUTH UPPER WALL / GREEN PAINT	
208536 03PC 0.101		INTERIOR NORTH WINDOW / WHITE PAINT	
208537 04PC 0.099		INTERIOR CEILING ABOVE COUNTER / OFF WHITE PAINT	
208538 05PC 0.098		INTERIOR / KITCHEN DOORS / OFF WHITE PAINT	
208539 06PC 0.103		INTERIOR KITCHEN WALLS / OFF WHITE PAINT	
208540 07PC 0.104		INTERIOR KITCHEN FLOOR / GREY PAINT	
208541 08PC 0.100		EXTERIOR SOUTH SIDE HANDRAIL / DARK GREEN PAINT	
208542 09PC 0.105		EXTERIOR SOUTH SIDE WINDOW / DARK GREEN PAINT	
208543 10PC 0.100		EXTERIOR SOUTH SIDE EAVES / TAN PAINT	

Laboratory Reporting Units: ____ Wipe in µg/ft² ____ Soil in ppm X Paint Chip in WT%
____ Waste Water in ppm ____ Drinking Water in ppb ____ Paint Chip in mg/cm²
____ Lead Waste in TTLC, STLC, TCLP (Circle all that apply)

Special Instructions to Laboratory:

Custody Record: Released By: B. WEITZEL Received By: Time/Date: 010400 11:20A

Released By: Received By: 11:45 1/4/2000

Health Science Associates

LEAD SAMPLE DATA SHEET

HSA Project No.: 00LA135 Project: ORANGE COUNTY FAIR CAFETERIA

Client: JESS CUMMINGS Batch No.:

Circle One
Rush = 4 Hours
Priority = 24 Hours
Routine = 5 Days

Date: 01-04-00 Project Mgr.: JAN BAILEY Ind.Hyg.: B.W.

Sample No.	Media	Location/Description	Notes/Instructions
008544 11PC 0.102	PAINT CHIP	EXTERIOR DOOR ON PATIO TO KITCHEN / WHITE PAINT	
008545 12PC 0.106		EXTERIOR PATIO COVER FRAME / FLAT WHITE PAINT	
008546 13PC 0.100		EXTERIOR / SOUTH WALL ON STUCCO / TAN PAINT	

Laboratory Reporting Units: ___ Wipe in µg/ft² ___ Soil in ppm X Paint Chip in WT%
___ Waste Water in ppm ___ Drinking Water in ppb ___ Paint Chip in mg/cm²
___ Lead Waste in TTLC, STLC, TCLP (Circle all that apply)

Special Instructions to Laboratory:

Custody Record: Released By: B. WEITZEL Received By: Time/Date: 010400 1120A