EXPRESS TERMS
FOR
PROPOSED BUILDING STANDARDS
OF THE
DEPARTMENT OF HOUSING AND COMMUNITY DEVELOPMENT
REGARDING THE ADOPTION OF THE
2013 EDITION OF THE CALIFORNIA BUILDING CODE
CALIFORNIA CODE OF REGULATIONS, TITLE 24, PART 2, CHAPTER 11A ONLY "HOUSING ACCESSIBILITY"

(HCD 08/12)

The Department of Housing and Community Development (HCD) proposes to bring forward the 2010 California Building Code, Chapter 11A – Housing Accessibility, for adoption into the 2013 California Building Code, including any necessary amendments, as presented on the following pages.

LEGEND FOR EXPRESS TERMS:

1. **Existing California amendments or code language being modified:** *All such language shown in italics Arial 9 point; modified language is underlined or shown in ~~strikeout~~.*

2. **Repealed text:** *All such language shown in ~~strikeout~~.*

3. **Amended, adopted or repealed language after public hearing:** *All such language shown in double underline or ~~double strikeout~~.*

4. **Notation:** Authority and Reference citations are provided at the end of each section.

NOTE OF EXPLANATION:

For the **2012 Triennial Code Adoption Cycle**, the Express Terms are displayed as follows:

- PART 1 includes the California Amendments HCD proposes to bring forward from the 2010 California Building Code, Chapter 11A, **with changes** as shown for adoption into the 2013 California Building Code.

- PART 2 displays the standards HCD proposes to bring forward from the 2010 California Building Code, Chapter 11A, **without change**, except for nonsubstantive editorial corrections for adoption into the 2013 California Building Code; the text is provided for context and the convenience of the code user.

SUMMARY OF REGULATORY ACTION

PART 1

HCD PROPOSES TO:

- Bring forward existing California Amendments in Chapter 11A from the 2010 California Building Code for adoption into the 2013 California Building Code **with amendments**.

- Repeal 2010 California Amendments in Chapter 11A, which are **not** brought forward into the 2013 California Building Code.

PART 2

HCD PROPOSES TO:

- Bring forward existing California Amendments in Chapter 11A from the 2010 California Building Code for adoption into the 2013 California Building Code **without amendment**, except for nonsubstantive editorial corrections.

PART 1

HCD proposes to bring forward existing definitions in Chapter 11A from the 2010 California Building Code for adoption into the 2013 California Building Code. HCD proposes to relocate all definitions to Chapter 2 as follows:

1. HCD proposes to amend Section 202 as follows:

SECTION 202
DEFINITIONS

ACCESSIBLE *for covered multifamily dwellings is the public or common-use areas of the building that can be approached, entered and used by persons with disabilities.*

ACCESSIBLE ROUTE *is a continuous and unobstructed path connecting all accessible elements and spaces in a building or within a site that can be negotiated by a person with a disability using a wheelchair, and that is also safe for and usable by persons with other disabilities. Interior accessible routes may include corridors, hallways, floors, ramps, elevators and lifts. Exterior accessible routes may include parking access aisles, curb ramps, crosswalks at vehicular ways, walks, ramps and lifts.*

ACCESSIBILITY *is the combination of various elements in a building or area which allows access, circulation and the full use of the building and facilities by persons with disabilities.*

ADAPTABLE DWELLING UNIT *is an accessible dwelling unit within a covered multifamily building as designed with elements and spaces allowing the dwelling unit to be adapted or adjusted to accommodate the user. See Division IV.*

ASSISTIVE DEVICE *is an aid, tool or instrument used by persons with disabilities to assist in activities of daily living.*

AUTOMATIC DOOR *is a door equipped with a power-operated mechanism and controls that open and close the door automatically upon receipt of a momentary actuating signal. The switch that begins the automatic cycle may be a photoelectric device, floor mat or manual switch.*

BATHROOM *is, for the purposes of this chapter, a room which includes a water closet (toilet), lavatory (sink), and a bathtub and/or a shower. It does not include single-fixture facilities or those with only a water closet and lavatory. It does include a compartmented bathroom. A compartmented bathroom is one in which the fixtures are distributed among interconnected rooms. A compartmented bathroom is considered a single unit and is subject to the requirements of this chapter.*

BUILDING ENTRANCE ON AN ACCESSIBLE ROUTE *is an accessible entrance to a building that is connected by an accessible route to public transportation stops, to parking or passenger loading zones, or to public streets or sidewalks, if available.*

CARRIAGE UNIT *is a dwelling unit with living space on one or more floors immediately above a Group U, private garage or garages. The footprint of the garage or garages is used as the footprint for the remaining floor or floors of the units above and the garage level contains no habitable space.*

Note: *Dwelling units located over a common garage shall not be considered carriage units.*

COMMON USE AREAS *are private use areas within multifamily residential facilities where the use of these areas is limited exclusively to owners, residents and their guests. The areas may be defined as rooms or spaces or elements inside or outside of a building.*

COVERED MULTIFAMILY DWELLINGS. *Dwelling units in buildings consisting of 3 or more dwelling units or 4 or more condominium units. Covered multifamily dwellings include dwelling units listed in Section 1102A.1. Dwelling units within a single structure separated by firewalls do not constitute separate buildings.*

Note: *For buildings or complexes containing public housing, see Chapter 11B for provisions of the Division of the State Architect–Access Compliance (DSA-AC).*

CROSS SLOPE *is the slope that is perpendicular to the direction of travel.*

CURB CUT *is an interruption of a curb at a pedestrian way, which separates surfaces that are substantially at the same elevation.*

CURB RAMP *is a sloping pedestrian way, intended for pedestrian traffic, which provides access between a walk or sidewalk and a surface located above or below an adjacent curb face.*

DWELLING UNIT *is a single unit of residence for a family of one or more persons. Examples of dwelling units covered by this chapter include condominiums, an apartment unit within an apartment building, and other types of dwellings in which sleeping accommodations are provided but toileting or cooking facilities are shared by occupants of more than one room or portion of the dwelling. Examples of the latter include dormitory rooms and sleeping accommodations in shelters intended for occupancy as residences for homeless persons.*

EQUIVALENT FACILITATION *is an alternate means of complying with the literal requirements of these standards and specifications that provides access consistent with the purpose of these standards and specifications.*

Notes:
1. See Section 1.8.1, Purpose.
2. In determining equivalent facilitation, consideration shall be given to means that provide for the maximum independence of persons with disabilities while presenting the least risk of harm, injury or other hazard to such persons or others.

FACILITY (or FACILITIES) *is a building, structure, room, site, complex or any portion thereof, that is built, altered, improved or developed to serve a particular purpose.*

GRAB BAR *is a bar for the purpose of being grasped by the hand for support.*

GROUND FLOOR *is the floor of a building with a building entrance on an accessible route. A building may have one or more ground floors.*

INTERNATIONAL SYMBOL OF ACCESSIBILITY *is that symbol adopted by Rehabilitation International's 11th World Congress for the purpose of indicating that buildings and facilities are accessible to persons with disabilities. See Chapter 11A, Figure 11A-1A.*

KICK PLATE *is an abrasion-resistant plate affixed to the bottom portion of a door to prevent a trap condition and protect its surface.*

LEVEL AREA *is a specified surface that does not have a slope in any direction exceeding 1/4 inch (6.4 mm) in 1 foot (305 mm) from the horizontal (2.083-percent gradient).*

LIFT, PLATFORM (WHEELCHAIR). *See "Platform (Wheelchair) Lift."*

MARKED CROSSING *is a crosswalk or other identified marked path intended for pedestrian use in crossing a vehicular way.*

MULTISTORY DWELLING UNIT *is a dwelling unit with finished living space located on one floor and the floor or floors immediately above or below it.*

NEWLY CONSTRUCTED *is a building that has never before been used or occupied for any purpose.*

NOSE, NOSING *is that portion of a tread projecting beyond the face of the riser immediately below.*

OPEN RISER *is the airspace between a tread projecting beyond the face of the riser immediately below.*

PASSAGE DOOR *is a door other than an exit door through which persons may traverse.*

PEDESTRIAN *is an individual who moves within walking areas with or without the use of walking-assistive devices such as crutches, leg braces, wheelchairs, etc.*

PEDESTRIAN RAMP *is a sloping accessible route intended for pedestrian traffic and is differentiated from a curb ramp.*

PEDESTRIAN WAY *is a route by which a pedestrian may pass.*

PERSONS WITH DISABILITIES*, for purposes of this chapter, "persons with disabilities" includes, but is not limited to, any physical or mental intellectual disability as defined in Government Code Section 12926.*

PLATFORM (WHEELCHAIR) LIFT *is a hoisting and lowering mechanism equipped with a car or platform, or support, which serves two landings of a building or structure and is designed to carry a passenger or passengers and/or luggage or other material a vertical distance as may be allowed by Section 1124A.11.*

POWDER ROOM. *Room containing a water closet (toilet) and lavatory (sink), and which is not defined as a bathroom.*

PRIMARY ENTRY *is the principal entrance through which most people enter the building, as designated by the building official.*

PRIMARY ENTRY LEVEL *is the floor or level of the building on which the primary entry is located.*

PUBLIC USE AREAS *means interior or exterior rooms or spaces of a building that are made available to the general public and does not include Common Use Areas as defined. Public Use Areas may be provided at a building that is privately or publicly owned.*

~~***PUBLICLY FUNDED. [HCD 1 & HCD 2]*** *For the purposes of housing, all buildings, structures, sidewalks, curbs and related facilities constructed in the state and used or intended to be used as a public use area, as defined in Section 1107A.16-P, shall comply with the accessibility standards of Chapter 11B of this code when state, county or municipal funds, or funds of any political subdivision of the state are used.~~

RAMP. *See "Pedestrian ramp*

RISER *is the vertical distance from the top of a tread to the top of the next higher tread.*

SLEEPING ACCOMMODATIONS *are rooms in which people may sleep; for example, dormitory and hotel or motel guest rooms or suites.*

SLOPE *is the relative steepness of the land between two points and is calculated as follows:*

The horizontal distance and elevation change between the two points (e.g., an entrance and a passenger loading zone). The difference in elevation is divided by the distance and the resulting fraction is multiplied by 100 to obtain the percentage of slope.

For example: if a principal entrance is 10 feet (3048 mm) from a passenger loading zone, and the principal entrance is raised 1 foot (305 mm) higher than the passenger loading zone, then the slope is 1/10 100 = 10 percent.

TRANSIENT LODGING *is a building, facility or portion thereof, available to the public as an inn, hotel, motel, timeshare or place where one or more dwelling units or sleeping accommodations are provided for transient guests, excluding inpatient medical care facilities and lodging houses with 5 or less guest rooms. Transient lodging may include but is not limited to, resorts, group homes, and dormitories.*

TREAD. *Horizontal member of a step.*

VEHICULAR OR PEDESTRIAN ARRIVAL POINTS. *Public or resident parking areas, public transportation stops, passenger loading zones, and public streets or sidewalks.*

WALK *is a surfaced pedestrian way not located contiguous to a street used by the public. (See definition for "Sidewalk.")*

WHEELCHAIR. *See "Wheelchair.*

NOTE:
Authority Cited: Health and Safety Code Sections 17040, 17050, 17920.9, 17921, 17921.3, 17921.6, 17921.10, 17922, 17922.6, 17922.12, 17927, 17928, 17959.6, 18300, 18552, 18554, 18620, 18630, 18640, 18670, 18690, 18691, 18865, 18871.3, 18871.4, 18873, 18873.1, 18873.2, 18873.3, 18873.4, 18873.5, 18938.3, 18944.11 and 19990; and Government Code Section 12955.1.

Reference: Health and Safety Code Sections 17000 through 17062.5, 17910 through 17995.5, 18200 through 18700, 18860 through 18874, and 19960 through 19997; and Government Code Sections 12955.1 and 12955.1.1.

HCD proposes to bring forward existing California Amendments in Chapter 11A from the 2010 California Building Code for adoption into the 2013 California Building Code with amendments as follows:

2. HCD proposes to amend Section 1102A as follows:

SECTION 1102A
BUILDING ACCESSIBILITY

1102A.1 Where required. *Buildings or portions of buildings and facilities within the scope of this chapter shall be accessible to persons with disabilities. Each building on a building site shall be considered separately when determining the requirements contained in this chapter, except when calculating the number of units which must comply with Section 1102A.3.1. Dwelling units within a single structure separated by firewalls do not constitute separate buildings.*

Newly-constructed covered multifamily dwellings as defined in this chapter, include, but are not limited to, the following:

1. *Apartment buildings with 3 or more dwelling units including timeshare apartments not considered a place of public accommodation or transient lodging as defined in Health and Safety Code Section 19955 (a), and Chapter 2 of the California Building Code.*
2. *Condominiums with 4 or more dwelling units including timeshare condominiums not considered a place of public accommodation or transient lodging as defined in Health and Safety Code Section 19955 (a), and Chapter 2 of the California Building Code.*
3. *Lodging houses, as defined in Chapter 2 of the California Building Code, used as a residence with more than 3 but not more than 5 guest rooms.*
4. *Congregate residences, as defined in Chapter 2 of the California Building Code.*
5. *Dwellings with 3 or more efficiency units, as defined in Chapter 2 of this code, or Section 17958.1 of the California Health and Safety Code.*
6. *Shelters for homeless persons, not otherwise subject to the disabled access provisions of the Division of the State Architect-Access Compliance (DSA-AC).*
7. *Dormitories, as defined in Chapter 2 of this code, with 3 or more guest rooms as defined in Chapter 2 of the California Building Code.*
8. *Timeshare dwellings with 3 or more units, not considered a place of public accommodations or transient lodging as defined in Health and Safety Code Section 19955 (a), and Chapter 2 of the California Building Code.*
9. *Other Group R occupancies in covered multifamily dwellings which are regulated by the Office of the State Fire Marshal. See Section 1.11.*
10. *~~Housing which is publicly funded~~ Public housing as defined in Chapter 2 of this code is subject to provisions of the Division of the State Architect (DSA-AC). See ~~Section 1111B.5~~ Chapter 11B.*

1102A.2 Existing buildings. *The building standards contained in this chapter do not apply to the alteration, repair, rehabilitation or maintenance of multifamily dwellings constructed for first occupancy prior to March 13, 1991. ~~Housing which is publicly funded~~ Public housing as defined in Chapter 2 of this code is subject to provisions of the Division of the State Architect (DSA-AC). See ~~Section 1111B.5~~ Chapter 11B.*

Covered multifamily dwellings shall be maintained in compliance with the accessibility standards in effect at the time of construction. Apartments constructed prior to March 13, 1991, shall be maintained in compliance with the accessibility standards in effect at the time of construction.

Additions shall be subject to the requirements of this chapter, provided the addition, when considered alone, meets the definition of a covered multifamily dwelling, as defined in ~~this chapter~~ Chapter 2. New common use spaces serving existing covered multifamily dwellings shall be subject to the requirements of this chapter.

Note: *For all existing public use areas, public accommodations and public housing ~~which is publicly funded~~, see Chapter 11B~~, Division IV, Section 1134B,~~ for provisions of the Division of the State Architect-Access Compliance (DSA-AC).*

~~***1102A.4 Participation areas.*** *Access shall be provided to elements listed in Section 1104B.4.3, "Participation areas."*~~

NOTE:
Authority Cited: Health and Safety Code Sections 17040, 17050, 17920.9, 17921, 17921.3, 17921.6, 17921.10, 17922, 17922.6, 17922.12, 17927, 17928, 17959.6, 18300, 18552, 18554, 18620, 18630, 18640, 18670, 18690, 18691, 18865, 18871.3, 18871.4, 18873, 18873.1, 18873.2, 18873.3, 18873.4, 18873.5, 18938.3, 18944.11 and 19990; and Government Code Section 12955.1.

Reference: Health and Safety Code Sections 17000 through 17062.5, 17910 through 17995.5, 18200 through 18700, 18860 through 18874, and 19960 through 19997; and Government Code Sections 12955.1 and 12955.1.1.

---

3. HCD proposes to amend Section 1109A as follows:

Division II — EXTERIOR FACILITIES

SECTION 1109A
PARKING FACILITIES

1109A.3 Required accessible parking spaces. *Accessible parking spaces shall be provided at a minimum rate of 2 percent of the covered multifamily dwelling units. At least one space of each type of parking facility shall be made accessible even if the total number exceeds 2 percent. ~~When assigned parking is provided, signage as required by Section 1109A.8.8 shall not be required.~~*

1109A.7 Location of accessible parking spaces. *The location of accessible parking spaces shall comply with the following:*

1. *Accessible parking spaces shall be located on the shortest possible accessible route to an accessible building, or covered multifamily dwelling unit entrance. All van accessible spaces may be grouped on one level of a multilevel parking facility.*

2. *When parking facilities are located adjacent to a building with multiple accessible entrances, accessible parking spaces shall be dispersed and located near the accessible building entrances.*

3. *When practical, the accessible route shall not cross lanes for vehicular traffic. When crossing vehicle traffic lanes is necessary, the accessible route shall be designated and marked as a crosswalk.*

4. *Parking facilities that do not serve a particular building shall have accessible parking spaces located on the shortest possible accessible route to an accessible pedestrian entrance of the parking facility.*

5. *Accessible parking spaces shall be located so that persons with disabilities are not compelled to wheel or walk behind parked cars other than their own.*

Exception: *When the enforcement agency determines that compliance with this section or providing equivalent facilitation would create an unreasonable hardship, parking spaces may be provided which would require a person with physical disabilities to wheel or walk behind other than accessible parking spaces.*

1109A.8 Design and construction. *(No change to text)*

1109A.8.1 Vertical clearances. *All entrances, exits and vehicular passageways to and from required accessible parking spaces within parking facilities, shall have a minimum vertical clearance of 8 feet 2 inches (2489 mm) from the floor to the lowest projection of the ceiling. Reflective warning signs complying with ~~Section 1117B.5.4~~*

Chapter 11B for character height shall be installed at transitions from the 8 feet 2 inch ceiling to lower ceiling heights in vehicular passageways in the same parking level.

1109A.8.6 Van accessible parking space. *One in every eight accessible spaces, but not less than one, shall be van accessible and shall be constructed in accordance with the following:*

1. Each space shall be served by a loading and unloading access aisle at least 8 feet (2438 mm) wide, placed on the passenger side with the vehicle parked in the forward position.

2. The minimum length of each space shall be 18 feet (5486 mm).

3. Each space shall be designated "van accessible" as required by Section 1109A.8.8.

4. All van accessible spaces may be grouped on one level of a multilevel parking facility.

5. The loading and unloading access aisle shall be marked by a border painted blue. Within the blue border, hatched lines a maximum of 36 inches (914 mm) on center shall be painted a color contrasting with the parking surface, preferably blue or white. The words "NO PARKING" shall be painted on the ground within each 8-foot (2438 mm) wide loading and unloading access aisle. This notice shall be painted in white letters no less than 12 inches (305 mm) high and located so that it is visible to traffic enforcement officials.

Note: *See Figures 11A-2A, 11A-2B and 11A-2C.*

NOTE:
Authority Cited: Health and Safety Code Sections 17040, 17050, 17920.9, 17921, 17921.3, 17921.6, 17921.10, 17922, 17922.6, 17922.12, 17927, 17928, 17959.6, 18300, 18552, 18554, 18620, 18630, 18640, 18670, 18690, 18691, 18865, 18871.3, 18871.4, 18873, 18873.1, 18873.2, 18873.3, 18873.4, 18873.5, 18938.3, 18944.11 and 19990; and Government Code Section 12955.1.

Reference: Health and Safety Code Sections 17000 through 17062.5, 17910 through 17995.5, 18200 through 18700, 18860 through 18874, and 19960 through 19997; and Government Code Sections 12955.1 and 12955.1.1.

---

4. HCD proposes to amend Section 1110A as follows:

SECTION 1110A
EXTERIOR ROUTES OF TRAVEL

1110A.3 Flooring. *Floor and ground surfaces shall be stable, firm, and slip resistant. If carpet or carpet tile is used in a common-use area or public-use area on a ground or floor surface, it shall have firm backing or no backing. Carpet or carpet tile shall have a level loop, textured loop, level cut pile, or level cut/uncut pile texture. The maximum pile height shall be 1/2 inch (12.7 mm). Exposed edges of carpet shall be fastened to floor surfaces and have trim along the entire length of the exposed edge. Carpet edge trim shall comply with Section 1111A requirements for changes in level.*

1110A.4 Exterior accessible routes over 200 feet (60 960 mm). *Exterior accessible routes that exceed 200 feet (60 960 mm) in length shall comply with Section 1138A.1.2. (See Figure 11A-1L)*

NOTE:
Authority Cited: Health and Safety Code Sections 17040, 17050, 17920.9, 17921, 17921.3, 17921.6, 17921.10, 17922, 17922.6, 17922.12, 17927, 17928, 17959.6, 18300, 18552, 18554, 18620, 18630, 18640, 18670, 18690, 18691, 18865, 18871.3, 18871.4, 18873, 18873.1, 18873.2, 18873.3, 18873.4, 18873.5, 18938.3, 18944.11 and 19990; and Government Code Section 12955.1.

Reference: Health and Safety Code Sections 17000 through 17062.5, 17910 through 17995.5, 18200 through 18700, 18860 through 18874, and 19960 through 19997; and Government Code Sections 12955.1 and 12955.1.1.

---

5. HCD proposes to amend Section 1112A as follows:

SECTION 1112A
CURB RAMPS ON ACCESSIBLE ROUTES

1112A.9 Detectable warnings. *See Chapter 11B~~, Section 1127B.5, Item 7~~.*

NOTE:
Authority Cited: Health and Safety Code Sections 17040, 17050, 17920.9, 17921, 17921.3, 17921.6, 17921.10, 17922, 17922.6, 17922.12, 17927, 17928, 17959.6, 18300, 18552, 18554, 18620, 18630, 18640, 18670, 18690, 18691, 18865, 18871.3, 18871.4, 18873, 18873.1, 18873.2, 18873.3, 18873.4, 18873.5, 18938.3, 18944.11 and 19990; and Government Code Section 12955.1.

Reference: Health and Safety Code Sections 17000 through 17062.5, 17910 through 17995.5, 18200 through 18700, 18860 through 18874, and 19960 through 19997; and Government Code Sections 12955.1 and 12955.1.1.

---

6. HCD proposes to amend Section 1114A as follows:

SECTION 1114A
EXTERIOR RAMPS AND LANDINGS ON ACCESSIBLE ROUTES

1114A.6.2.5 Handrail grips. *The handgrip portion of handrails shall not be less than 1¼ inches (31.75 mm) nor more than 2 inches (50.8 mm) in cross-sectional dimension or the shape shall provide an equivalent gripping surface. The handgrip portion of handrails shall have a smooth surface with no sharp corners. Edges shall have a minimum radius of 1/8 inch (3.17 mm). Handrails shall not rotate within their fittings. (See Figure 11A-6B).*

> ***Note:*** *For public use areas, public accommodations, and public housing ~~which is publicly funded~~, see Chapter 11B~~, Division III, Section 1133B.5.5~~ for provisions of the Division of the State Architect--Access Compliance (DSA-AC).*

NOTE:
Authority Cited: Health and Safety Code Sections 17040, 17050, 17920.9, 17921, 17921.3, 17921.6, 17921.10, 17922, 17922.6, 17922.12, 17927, 17928, 17959.6, 18300, 18552, 18554, 18620, 18630, 18640, 18670, 18690, 18691, 18865, 18871.3, 18871.4, 18873, 18873.1, 18873.2, 18873.3, 18873.4, 18873.5, 18938.3, 18944.11 and 19990; and Government Code Section 12955.1.

Reference: Health and Safety Code Sections 17000 through 17062.5, 17910 through 17995.5, 18200 through 18700, 18860 through 18874, and 19960 through 19997; and Government Code Sections 12955.1 and 12955.1.1.

---

7. HCD proposes to amend Section 1115A as follows:

SECTION 1115A
EXTERIOR STAIRWAYS

1115A.6.2.5 Handrail grips. *The handgrip portion of handrails shall not be less than 1¼ inches (31.75 mm) nor more than 2 inches (50.8 mm) in cross-sectional dimension or the shape shall provide an equivalent gripping surface. The handgrip portion of handrails shall have a smooth surface with no sharp corners. Edges shall have a minimum radius of 1/8 inch (3.17 mm). Handrails shall not rotate within their fittings. (See Figure 11A-6B).*

> ***Note:*** *For public use areas, public accommodations, and public housing ~~which is publicly funded~~, see Chapter 11B~~, Division III, Section 1133B.4.2.6~~ for provisions of the Division of the State Architect--Access Compliance (DSA-AC).*

NOTE:
Authority Cited: Health and Safety Code Sections 17040, 17050, 17920.9, 17921, 17921.3, 17921.6, 17921.10, 17922, 17922.6, 17922.12, 17927, 17928, 17959.6, 18300, 18552, 18554, 18620, 18630, 18640, 18670, 18690, 18691, 18865, 18871.3, 18871.4, 18873, 18873.1, 18873.2, 18873.3, 18873.4, 18873.5, 18938.3, 18944.11 and 19990; and Government Code Section 12955.1.

Reference: Health and Safety Code Sections 17000 through 17062.5, 17910 through 17995.5, 18200 through 18700, 18860 through 18874, and 19960 through 19997; and Government Code Sections 12955.1 and 12955.1.1.

8. HCD proposes to amend Section 1116A as follows:

SECTION 1116A
HAZARDS ON ACCESSIBLE ROUTES

1116A.1 Warning curbs*. Abrupt changes in level exceeding 4 inches (101.6 mm) in vertical dimension, such as changes in level at planters or fountains located in or adjacent to walks, sidewalks, or other pedestrian ways shall be identified by curbs or other approved barriers projecting at least 6 inches (152.4 mm) in height above the walk or sidewalk surface to warn the blind of a potential drop-off.*

Exceptions:

1. Between a walk or sidewalk and an adjacent street or driveway.

2. When a guardrail or handrail is provided with ~~a wheel guide centered 2 to 4 inches (50.8 to 101.6 mm) above the surface of the walk or sidewalk~~ edge protection in accordance with Section 1010.10.1.

1116A.2 Headroom clearance. *Walks, pedestrian ways, and other circulation spaces which are part of the required egress system shall have a minimum clear headroom ~~of 84 inches (2134 mm)~~ as required in Section 1003.2. Other walks, pedestrian ways, and circulation spaces shall have a minimum clear headroom of 80 inches (2032 mm). If the vertical clearance of an area adjoining an accessible route is reduced to less than 80 inches (2032 mm) nominal dimension, a guardrail or other barrier having its leading edge at or below 27 inches (686 mm) above the finished floor shall be provided.*

Exception: *Doorways and archways less than 24 inches (610 mm) in depth may have a minimum clear headroom of 80 inches (2032 mm) nominal. (See Section 1126A.)*

NOTE:
Authority Cited: Health and Safety Code Sections 17040, 17050, 17920.9, 17921, 17921.3, 17921.6, 17921.10, 17922, 17922.6, 17922.12, 17927, 17928, 17959.6, 18300, 18552, 18554, 18620, 18630, 18640, 18670, 18690, 18691, 18865, 18871.3, 18871.4, 18873, 18873.1, 18873.2, 18873.3, 18873.4, 18873.5, 18938.3, 18944.11 and 19990; and Government Code Section 12955.1.

Reference: Health and Safety Code Sections 17000 through 17062.5, 17910 through 17995.5, 18200 through 18700, 18860 through 18874, and 19960 through 19997; and Government Code Sections 12955.1 and 12955.1.1.

9. HCD proposes to amend Section 1119A as follows:

SECTION 1119A
INTERIOR ROUTES OF TRAVEL

1119A.2 Flooring. *Floor and ground surfaces shall be stable, firm, and slip resistant. If carpet or carpet tile is used in a common-use area or public-use area-on a ground or floor surface, it shall have firm backing or no backing. Carpet or carpet tile shall have a level loop, textured loop, level cut pile, or level cut/uncut pile texture. The maximum pile height shall be 1/2 inch (12.7 mm). Exposed edges of carpet shall be fastened to floor surfaces and have trim along the entire length of the exposed edge. Carpet edge trim shall comply with Section ~~1111A~~ 1121A requirements for changes in level.*

NOTE:
Authority Cited: Health and Safety Code Sections 17040, 17050, 17920.9, 17921, 17921.3, 17921.6, 17921.10, 17922, 17922.6, 17922.12, 17927, 17928, 17959.6, 18300, 18552, 18554, 18620, 18630, 18640, 18670, 18690, 18691, 18865, 18871.3, 18871.4, 18873, 18873.1, 18873.2, 18873.3, 18873.4, 18873.5, 18938.3, 18944.11 and 19990; and Government Code Section 12955.1.

Reference: Health and Safety Code Sections 17000 through 17062.5, 17910 through 17995.5, 18200 through 18700, 18860 through 18874, and 19960 through 19997; and Government Code Sections 12955.1 and 12955.1.1.

---

10. HCD proposes to amend Section 1120A as follows:

SECTION 1120A
INTERIOR ACCESSIBLE ROUTES

Note: *For the purpose of this section, interior accessible routes shall include but not be limited to corridors, hallways, exit balconies and covered or enclosed walkways.*

1120A.1 Widths. *Interior accessible routes serving an occupant load of 10 or more shall not be less than 44 inches (1118 mm) in width. Interior accessible routes serving an occupant load of less than 10 shall not be less than 36 inches (914 mm) in width.*

If a person in a wheelchair must make a turn around a corner or an obstruction, the minimum clear width of the accessible route shall be as ~~shown in Figure 11A-1C~~ specified in Section 1138A.1.5.

1120A.2 Interior accessible routes over 200 feet (60 960 mm). *Interior accessible routes that exceed 200 feet (60 960 mm) in length shall comply with Section 1138A.1.2~~:~~.*
~~1. Have a minimum clear width of 60 inches (1524 mm); or~~
~~2. Have at a central location a 60-inch by 60-inch (1524 mm by 1524 mm) minimum wheelchair turning space or passing alcove; or~~
~~3. Have at a central location an intervening cross or tee that is a minimum of 44 inches (1118 mm) in width.~~

~~Note:~~ *See Figure 11A-1L.*

NOTE:
Authority Cited: Health and Safety Code Sections 17040, 17050, 17920.9, 17921, 17921.3, 17921.6, 17921.10, 17922, 17922.6, 17922.12, 17927, 17928, 17959.6, 18300, 18552, 18554, 18620, 18630, 18640, 18670, 18690, 18691, 18865, 18871.3, 18871.4, 18873, 18873.1, 18873.2, 18873.3, 18873.4, 18873.5, 18938.3, 18944.11 and 19990; and Government Code Section 12955.1.

Reference: Health and Safety Code Sections 17000 through 17062.5, 17910 through 17995.5, 18200 through 18700, 18860 through 18874, and 19960 through 19997; and Government Code Sections 12955.1 and 12955.1.1.

---

11. HCD proposes to amend Section 1121A as follows:

SECTION 1121A
CHANGES IN LEVEL ON ACCESSIBLE ROUTES

1121A.1 Changes in level not exceeding 1/2 inch*. (No change to text)*

1121A.2 Changes greater than 1/2 inch. *Changes in level greater than 1/2 inch (12.7 mm) shall be made by means of a sloped surface not greater than 1 unit vertical in 20 units horizontal (5-percent slope), or a curb ramp, ramp, elevator or platform (wheelchair) lift. Stairs shall not be part of an accessible route. When stairs are located along or adjacent to an accessible route they shall comply with Section 1123A for interior stairways.*

NOTE:
Authority Cited: Health and Safety Code Sections 17040, 17050, 17920.9, 17921, 17921.3, 17921.6, 17921.10, 17922, 17922.6, 17922.12, 17927, 17928, 17959.6, 18300, 18552, 18554, 18620, 18630, 18640, 18670, 18690, 18691, 18865, 18871.3, 18871.4, 18873, 18873.1, 18873.2, 18873.3, 18873.4, 18873.5, 18938.3, 18944.11 and 19990; and Government Code Section 12955.1.

Reference: Health and Safety Code Sections 17000 through 17062.5, 17910 through 17995.5, 18200 through 18700, 18860 through 18874, and 19960 through 19997; and Government Code Sections 12955.1 and 12955.1.1.

12. HCD proposes to amend Section 1122A as follows:

SECTION 1122A
INTERIOR RAMPS AND LANDINGS ON ACCESSIBLE ROUTES

1122A.5.2.5 Handrail grips. *The handgrip portion of handrails shall not be less than 1¼ inches (31.75 mm) nor more than 2 Inches (50.8 mm) in cross-sectional dimension or the shape shall provide an equivalent gripping surface. The handgrip portion of handrails shall have a smooth surface with no sharp corners. Edges shall have a minimum radius of 1/8 inch (3.17 mm). Handrails shall not rotate within their fittings. (See Figure 11A-6B).*

> ***Note:*** *For public use areas, public accommodations, and public housing ~~which is publicly funded~~, see Chapter 11B~~, Division III, Section 1133B.5.5~~ for provisions of the Division of the State Architect--Access Compliance (DSA-AC).*

NOTE:
Authority Cited: Health and Safety Code Sections 17040, 17050, 17920.9, 17921, 17921.3, 17921.6, 17921.10, 17922, 17922.6, 17922.12, 17927, 17928, 17959.6, 18300, 18552, 18554, 18620, 18630, 18640, 18670, 18690, 18691, 18865, 18871.3, 18871.4, 18873, 18873.1, 18873.2, 18873.3, 18873.4, 18873.5, 18938.3, 18944.11 and 19990; and Government Code Section 12955.1.

Reference: Health and Safety Code Sections 17000 through 17062.5, 17910 through 17995.5, 18200 through 18700, 18860 through 18874, and 19960 through 19997; and Government Code Sections 12955.1 and 12955.1.1.

13. HCD proposes to amend Section 1123A as follows:

SECTION 1123A
INTERIOR STAIRWAYS

1123A.6.2.5 Handrail grips. *The handgrip portion of handrails shall not be less than 1¼ inches (31.75 mm) nor more than 2 inches (50.8 mm) in cross-sectional dimension or the shape shall provide an equivalent gripping surface. The handgrip portion of handrails shall have a smooth surface with no sharp corners. Edges shall have a minimum radius of 1/8 inch (3.17 mm). Handrails shall not rotate within their fittings. (See Figure 11A-6B).*

> ***Note:*** *For public use areas, public accommodations, and public housing ~~which is publicly funded~~, see Chapter 11B~~, Division III, Section 1133B.4.2.6~~ for provisions of the Division of the State Architect-Access Compliance (DSA-AC).*

NOTE:
Authority Cited: Health and Safety Code Sections 17040, 17050, 17920.9, 17921, 17921.3, 17921.6, 17921.10, 17922, 17922.6, 17922.12, 17927, 17928, 17959.6, 18300, 18552, 18554, 18620, 18630, 18640, 18670, 18690, 18691, 18865, 18871.3, 18871.4, 18873, 18873.1, 18873.2, 18873.3, 18873.4, 18873.5, 18938.3, 18944.11 and 19990; and Government Code Section 12955.1.

Reference: Health and Safety Code Sections 17000 through 17062.5, 17910 through 17995.5, 18200 through 18700, 18860 through 18874, and 19960 through 19997; and Government Code Sections 12955.1 and 12955.1.1.

14. HCD proposes to amend Section 1125A as follows:

SECTION 1125A
HAZARDS ON ACCESSIBLE ROUTES

1125A.1 Warning curbs*. Abrupt changes in level exceeding 4 inches (101.6 mm) in vertical dimension, such as changes in level at planters or fountains located in or adjacent to walks, halls, corridors, passageways, aisles, pedestrian ways and other circulation spaces, shall be identified by curbs projecting at least 6 inches (152.4 mm) in height above the walk or sidewalk surface to warn the blind of a potential drop-off.*

Exception: *When a guardrail or handrail is provided with ~~a wheel guide centered 2 to 4 inches (50.8 to 101.6 mm) above the surface of the walk or sidewalk~~ edge protection in accordance with Section 1010.10.1.*

1125A.2 Headroom clearance. *Walks, halls, corridors, passageways, aisles, pedestrian ways and other circulation spaces which are part of the required egress system shall have a minimum clear headroom ~~of 84 inches (2134 mm)~~ as required in Section 1003.2. Other walks, pedestrian ways and circulation spaces shall have a minimum clear headroom of 80 inches (2032 mm). If the vertical clearance of an area adjoining an accessible route is reduced to less than 80 inches (2032 mm) nominal dimension, a guardrail or other barrier having its leading edge at or below 27 inches (686 mm) above the finished floor shall be provided.*

> ***Exception:*** *Doorways and archways less than 24 inches (610 mm) in depth may have a minimum clear headroom of 80 inches (2032 mm) nominal. (See Section 1126A.)*

NOTE:
Authority Cited: Health and Safety Code Sections 17040, 17050, 17920.9, 17921, 17921.3, 17921.6, 17921.10, 17922, 17922.6, 17922.12, 17927, 17928, 17959.6, 18300, 18552, 18554, 18620, 18630, 18640, 18670, 18690, 18691, 18865, 18871.3, 18871.4, 18873, 18873.1, 18873.2, 18873.3, 18873.4, 18873.5, 18938.3, 18944.11 and 19990; and Government Code Section 12955.1.

Reference: Health and Safety Code Sections 17000 through 17062.5, 17910 through 17995.5, 18200 through 18700, 18860 through 18874, and 19960 through 19997; and Government Code Sections 12955.1 and 12955.1.1.

---

15. HCD proposes to amend Section 1126A as follows:

SECTION 1126A
DOORS

1126A.5 Type of lock or latch. *The type of latch and lock required for all doors shall be in accordance with Section 1126A.6 and Chapter 10, Section 1008.*

NOTE:
Authority Cited: Health and Safety Code Sections 17040, 17050, 17920.9, 17921, 17921.3, 17921.6, 17921.10, 17922, 17922.6, 17922.12, 17927, 17928, 17959.6, 18300, 18552, 18554, 18620, 18630, 18640, 18670, 18690, 18691, 18865, 18871.3, 18871.4, 18873, 18873.1, 18873.2, 18873.3, 18873.4, 18873.5, 18938.3, 18944.11 and 19990; and Government Code Section 12955.1.

Reference: Health and Safety Code Sections 17000 through 17062.5, 17910 through 17995.5, 18200 through 18700, 18860 through 18874, and 19960 through 19997; and Government Code Sections 12955.1 and 12955.1.1.

---

16. HCD proposes to amend Section 1127A as follows:

SECTION 1127A
COMMON USE FACILITIES

1127A.2.1 Multiple-accommodation toilet facilities. *Multiple-accommodation toilet facilities shall have the following: (See Figures 11A-9A and 11A-9B)*

~~***Notes:***~~
~~*1. See definition in Chapter 2.*~~
~~*2. See Figure 11A-9A.*~~

1. ***Wheelchair ~~clearance~~ turning space.*** ~~*A clear space measured from the floor to a height of 27 inches (686 mm) above the floor, within the sanitary facility room, of sufficient size to inscribe a circle with a diameter not less than 60 inches (1524 mm), or a clear space 56 inches by 63 inches (1422 mm by 1600 mm) in size.*~~

   Turning space of sufficient size to inscribe a circle with a diameter not less than 60 inches (1524 mm) or a T-shaped space shall be provided within the toilet facility. The wheelchair turning space shall comply with Section 1138A.1.3. Other than the door to the accessible water closet compartment, a door, in any position, may encroach into this space by not more than 12 inches (305 mm).

2. ***Clear space at fixtures.*** *Doors shall not swing into the clear floor space required for any fixture. Required clear floor space, clearance at fixtures, and turning space shall be permitted to overlap.*

3. ***Accessible water closet compartment.*** ~~*A water closet fixture located in a compartment shall provide a minimum 28-inch-wide (711 mm) clear space from a fixture, or a minimum 32-inch-wide (813 mm) clear space from a wall at one side of the water closet. The other side of the water closet shall provide 18 inches (457 mm) from the centerline of the water closet to the wall. The stall shall be a minimum of 60 inches (1524 mm) wide. A minimum 48-inch-long (1219 mm) clear space shall be provided in front of the water closet if the compartment has an end-opening door (facing the water closet). A minimum 60-inch-long (1524 mm) clear space shall be provided in a compartment with the door located at the side.*~~

   Accessible water closet compartments shall be 60 inches (1524 mm) wide minimum measured perpendicular to the side wall, 56 inches (1422 mm) deep minimum for wall hung water closets and 59 inches (1499 mm) deep minimum for floor mounted water closets measured perpendicular to the rear wall. (See Figure 11A-9A (c))

   Water closet fixtures located in accessible water closet compartments shall be positioned with a wall or partition to the rear and to one side. The centerline of the water closet shall be 16 inches (406 mm) minimum to 18 inches (457 mm) maximum from the side wall or partition.

   In ambulatory accessible toilet compartments specified in Item 6 of this section, the water closet shall be 17 inches (432 mm) minimum and 19 inches (483 mm) maximum from the side wall or partition. (See Figure 11A-9A (d).

   Clearance around a water closet shall be 60 inches (1524 mm) minimum measured perpendicular from the side wall and 56 inches (1422 mm) minimum measured perpendicular from the rear wall. The required clearance around the water closet shall be permitted to overlap the water closet, associated grab bars, dispensers, sanitary napkin disposal units, coat hooks, shelves, accessible routes, clear floor space and clearances required at other fixtures, and the turning space. No other fixtures or obstructions shall be located within the required water closet clearance.

   A minimum 48 inches (1219 mm) deep and 60 inches (1524 mm) wide clear maneuvering space shall be provided in front of the water closet if the compartment has an end-opening door (facing the water closet). A minimum 60 inches (1524 mm) deep and 60 inches (1524 mm) wide clear maneuvering space shall be provided in a compartment with the door located at the side. See Figure 11A-9A (a)(c)

4. ***Grab bars.*** ~~*Grab bars shall be installed in accordance with Section 1127A.4 and shall not project more than 3 inches (76.2 mm) into the clear spaces.*~~

   Grab bars shall be provided on the side wall closest to the water closet and on the rear wall. Grab bars shall comply with this section and Section 1127A.4.

The side wall grab bar shall be 42 inches (1067 mm) long minimum, located 12 inches (305 mm) maximum from the rear wall and extend 54 inches (1372 mm) minimum from the rear wall. The front end of the side grab bar shall be positioned 24 inches (610 mm) minimum in front of the water closet.

The rear wall grab bar shall be 36 inches (914 mm) long minimum and extend from the centerline of the water closet 12 inches (305 mm) minimum on one side and 24 inches (610 mm) minimum on the other side.

Exceptions:

1. The rear grab bar shall be permitted to be 24 inches (610 mm) long minimum, centered on the water closet, when wall space does not permit a length of 36 inches (914 mm) minimum due to the location of a recessed fixture adjacent to the water closet.

2. When the enforcing agency requires flush controls for flush valves to be located in a position that conflicts with the location of the rear grab bar, then the rear grab bar shall be permitted to be split or shifted to the open side of the toilet area.

5. ***Compartment doors.*** *Compartment doors shall comply with the following:*

   5.1. The water closet compartment shall be equipped with a door that has an automatic-closing device, and shall have a clear, unobstructed opening width of 32 inches (813 mm) when located at the end and 34 inches (864 mm) when located at the side with the door positioned at an angle of 90 degrees from its closed position.

   5.2. When standard compartment doors are used, with a minimum 9-inch (228.6 mm) clearance for footrests underneath and a self-closing device, clearance at the strike edge as specified in Section 1126A.3.2 is not required.

   5.3. The inside and outside of the compartment door shall be equipped with a loop or U-shaped handle immediately below the latch. The latch shall be flip-over style, sliding or other hardware not requiring the user to grasp or twist.

   5.4. Except for door-opening widths and door swings, a clear, unobstructed access of not less than 44 inches (1118 mm) shall be provided to water closet compartments designed for use by persons with disabilities, and the space immediately in front of a water closet compartment shall not be less than 48 inches (1219 mm) as measured at right angles to compartment door in its closed position.

~~*6.* ***Large toilet rooms.*** *Where six or more stalls are provided within a multiple-accommodation toilet room, at least one stall shall comply with Section 1127A.2.1, Items 2 and 3. At least one additional stall shall be 36 inches (914 mm) wide with an outward swinging self-closing door and grab bars complying with Sections 1127A.4.3, 1127A.4.4 and 1127A.4.5 installed on each compartment side wall.*~~

6. ***Ambulatory accessible compartments.*** *When six or more toilet compartments are provided within a multiple-accommodation toilet room, or when the combination of urinals and water closets totals six or more fixtures, at least one compartment shall comply with Section 1127A.2.1, Items 2 and 3. At least one additional ambulatory compartment shall have a depth of 60 inches (1524 mm) minimum, and a width of 35 inches (890 mm) minimum and 37 inches (940 mm) maximum.*

   The ambulatory accessible compartment shall have a self-closing door, which shall not swing into the minimum required compartment area. Grab bars, complying with Sections 1127A.4.2, 1127A.4.3, 1127A.4.4 and 1127A.4.5, shall be installed on each compartment side wall. (See Figure 11A-9A (d))

1127A.2.2 Single-accommodation toilet facilities. *Single-accommodation toilet facilities shall comply with the following: (See Figures 11A-9A (b) and 11A-9B)*

1. ***Wheelchair clearance.*** *There shall be sufficient space in the toilet room for a wheelchair measuring 30 inches (762 mm) wide by 48 inches (1219 mm) long to enter the room and permit the door to close. There shall be in the room a clear ~~floor~~ turning space of at least 60 inches (1524 mm) in diameter, or a T-shaped space complying with ~~Figure 11A-1D~~ Section 1138A.1.3.*

   Required clear floor space, clearance at fixtures, and turning space shall be permitted to overlap.

2. ***Encroachment of doors.*** *Doors shall not encroach into the ~~clear floor~~ turning space specified in Item 1 of this section by more than 12 inches (305 mm)~~, except for the panel door to any water closet compartment~~. ~~(See Figure 11A-9B).~~*

3. ***Accessible water closet.*** ~~*The water closet shall be located in a space which provides a minimum 28-inch-wide (711 mm) clear space from a fixture or a minimum 32-inch-wide (813 mm) clear space from a wall at one side. The other side shall provide 18 inches (457 mm) from the centerline of the water closet to the wall. A minimum 48 inches (1219 mm) of clear space shall be provided in front of the water closet.*~~

   A water closet fixture located in a single-accommodation toilet facility shall be positioned with a wall or partition to the rear and to one side. The centerline of the water closet shall be 16 inches (406 mm) minimum to 18 inches (457 mm) maximum from the side wall or partition.

   Clearance around a water closet shall be 60 inches (1524 mm) minimum measured perpendicular from the side wall and 56 inches (1422 mm) minimum measured perpendicular from the rear wall. The required clearance around the water closet shall be permitted to overlap the water closet, associated grab bars, dispensers, sanitary napkin disposal units, coat hooks, shelves, accessible routes, clear floor space and clearances required at other fixtures, and the turning space. No other fixtures or obstructions shall be located within the required water closet clearance.

   A minimum 48 inches (1219 mm) deep and 60 inches (1524 mm) wide clear maneuvering space shall be provided in front of the water closet.

4. ***Grab bars.*** ~~*Grab bars shall be installed in accordance with Section 1127A.4.*~~

   Grab bars shall be provided on the side wall closest to the water closet and on the rear wall. Grab bars shall comply with this section and Section 1127A.4.

   The side wall grab bar shall be 42 inches (1067 mm) long minimum, located 12 inches (305 mm) maximum from the rear wall and extend 54 inches (1372 mm) minimum from the rear wall. The front end of the side grab bar shall be positioned 24 inches (610 mm) minimum in front of the water closet.

   The rear wall grab bar shall be 36 inches (914 mm) long minimum and extend from the centerline of the water closet 12 inches (305 mm) minimum on one side and 24 inches (610 mm) minimum on the other side.

   Exceptions:

   1. The rear grab bar shall be permitted to be 24 inches (610 mm) long minimum, centered on the water closet, when wall space does not permit a length of 36 inches (914 mm) minimum due to the location of a recessed fixture adjacent to the water closet.

   2. When the enforcing agency requires flush controls for flush valves to be located in a position that conflicts with the location of the rear grab bar, then the rear grab bar shall be permitted to be split or shifted to the open side of the toilet area.

5. ***Accessible route.*** *All doors, fixtures and controls shall be on an accessible route. The minimum clear width of an accessible route shall be 36 inches (914 mm) except at doors (See Section 1126A). If a person in a wheelchair must make a turn around an obstruction, the minimum clear width of the accessible route shall be as ~~shown in Figure 11A-1C~~ specified in Section 1138A.1.5. ~~(See also Figure 11A-9B).~~*

1127A.2.3 Water closets. *Water closets required to be accessible shall comply with the following: (See Figure 11A-9B)*

1. ***Height.*** *The height of accessible water closets shall be a minimum of 17 inches (432 mm) to a maximum of 19 inches (483 mm) measured to the top of a maximum 2-inch-high (50.8 mm) toilet seat.*

2. ***Controls.*** *Flush controls shall be hand operated or automatic. ~~Controls~~ Hand operated controls shall be operable with one hand and shall not require tight grasping, pinching or twisting. Controls for the flush valves shall be mounted on the ~~wide~~ open side of ~~toilet areas~~ the water closet no more than 44 inches (1118 mm) above the floor. The force required to activate controls shall be no greater than 5 pounds~~-force~~ ~~(lbf)~~ (22.2 N).*

3. ***Toilet seats.*** *Seats shall not be sprung to return to a lifted position.*

1127A.2.4 Accessible urinals. *~~Urinals required to be accessible shall comply with the following:~~ When urinals are provided, at least one shall comply with the following:*

1. ***Height and wall projection.*** *Urinals shall be floor mounted (stall type) or wall hung. ~~Where one or more wall-hung urinals are provided, at least one with a rim projecting a minimum of 14 inches (356 mm) to a maximum of 17 inches (432 mm) from the wall and a maximum of 17 inches (432 mm) above the floor shall be provided.~~*
   The rim of the wall hung urinals shall be 17 inches (432 mm) maximum above the finish floor. Urinals (floor mounted and wall hung) shall be 13 1/2 inches (343 mm) deep minimum measured from the outer face of the rim to the back of the fixture.

2. ***Flush controls.*** *Flush controls shall be hand operated or automatic. Hand operated ~~Flush~~ controls shall be operable with one hand, shall not require tight grasping, pinching or twisting of the wrist and shall be mounted no more than 44 inches (1118 mm) above the floor. The force required to activate controls shall be no greater than 5 pounds ~~force (lbf)~~ (22.2 N). Electronic automatic flushing controls are ~~acceptable and~~ preferable.*

~~3. **Clear floor space and reach ranges.** Where urinals are provided, at least one shall have a clear floor space 30 inches by 48 inches (762 mm by 1219 mm) in front of the urinal to allow forward approach. Clear floor space and reach ranges shall comply with Sections 1127A.9.4 and 1127A.9.5.~~

3. ***Clear floor space.*** *A clear floor space 30 inches by 48 inches (762 mm by 1219 mm) shall be provided in front of the urinal to allow forward approach. The clear floor space shall comply with Section 1138A.1.4.*

1127A.3 Accessible lavatories. *When common use lavatories are provided for residents or guests, at least one, and not less than 1 percent of all lavatories, shall comply with the following:*

1. ***Location.*** *Lavatories shall be installed with the centerline of the fixture a minimum of 18 inches (457 mm) horizontally from an adjoining wall, partition or fixture. The top of the fixture rim shall be a maximum of 34 inches (864 mm) above the finished floor.*

2. ***Floor space.*** *A clear ~~maneuvering~~ floor space at least 30 inches by 48 inches (762 mm by 1219 mm) shall be provided in front of accessible lavatories to allow forward approach. Such clear floor space shall adjoin or overlap an accessible route or another clear floor space. ~~and shall not extend into the knee and toe space underneath the lavatory more than 19 inches (483 mm). This clear space shall comply with Section 1127A.9.5 for allowable reach ranges.~~*

3. ***Knee and toe space.*** *~~Knee and toe space (see Figure 11A-9D) shall be provided as follows:~~*
   ~~3.1. The knee space shall be at least 30 inches (762 mm) wide and 8 inches deep (203.2 mm).~~
   ~~3.2. The knee space shall be at least 29 inches (737 mm) high at the front face and reducing to not less than 27 inches (686 mm) at a point 8 inches (203.2 mm) back from the front edge.~~
   ~~3.3. Knee space required by this section shall be clear and unobstructed.~~
   ~~3.4. The toe space required in this section shall be provided as follows:~~
   ~~3.4.1. Shall be at least 30 inches (762 mm) wide and centered on the lavatory.~~
   ~~3.4.2. Shall be at least 17 inches (432 mm) deep, measured from the front edge.~~
   ~~3.4.3. Shall be at least 9 inches (228.6 mm) high from the floor.~~

   A clear and unobstructed knee and toe space, complying with Section 1138A.2, shall be provided underneath the lavatory. The knee and toe space shall be centered on the fixture. The clear floor space required by Item 2 shall not extend into the knee and toe space more than 19 inches (483 mm). (See Figure 11A-9D)

4. ***Finished floor.*** *The finished floor beneath the lavatory shall be extended to the wall.*

5. ***Plumbing protection.*** *~~Hot water~~ Water supply and drain pipes under lavatories shall be insulated or otherwise covered to protect against contact. There shall be no sharp or abrasive surfaces under lavatories.*

6. ***Lavatory faucet controls.*** *Faucet controls and operation mechanisms shall be operable with one hand and shall not require tight grasping, pinching or twisting of the wrist. The force required to activate controls shall be no greater than 5 pounds ~~force (lbf)~~ (22.2N). Lever operated, push type and electronically controlled mechanisms are examples of acceptable designs. ~~Self-closing valves~~ Hand-operated metering faucets are allowed if the faucet remains open for at least 10 seconds.*

1127A.4 Grab bars, tub and shower seats, fasteners and mounting devices.

1127A.4.1 General. *(No change to text)*

1127A.4.2 Location. *~~Grab bars which are located on each side, or on one side and the back, of the accessible toilet stall or compartment shall be securely attached and centered 33 inches (838 mm) above and parallel to the floor, except that, where a tank-type toilet obstructs placement at 33 inches (838 mm), the grab bar may be centered as high as 36 inches (914 mm). The space between the grab bar and objects below shall be a minimum of 1 1/2 inches (38.1 mm). Grab bars shall be at least 42 inches (1067 mm) in length with the front end positioned 24 inches (610 mm) in front of the water closet stool. Grab bars at the back shall not be less than 36 inches (914 mm) in length. (See Figures 11A-9A and 11A-9B).~~*

Grab bars shall be installed in a horizontal position, 33 inches (838 mm) minimum and 36 inches (914 mm) maximum above the finish floor measured to the top of the gripping surface.

Exception: *The height of the lower grab bar on the back wall of a bathtub shall comply with Section 1127A.5.2.*

1127A.4.3 Diameter or width. *The diameter or width of the gripping surfaces of a grab bar shall comply with the following: (See Figure 11A-9C) ~~be 11/4 inches to 11/2 inches (31.75 mm to 38.1 mm) or of a shape that provides an equivalent gripping surface. If grab bars are mounted adjacent to a wall, the space between the wall and the grab bars shall be 11/2 inches (38.1 mm). (See Figure 11A-9C)~~*

1. ***Circular cross section.*** *Grab bars with circular cross section shall have an outside diameter of 1 1/4 inches (32 mm) minimum and 2 inches (51 mm) maximum.*
2. ***Non-circular cross section.*** *Grab bars with non-circular cross section shall have a cross-section dimension of 2 inches (51 mm) maximum. The perimeter dimension of grab bars with non-circular cross section shall be 4 inches (102 mm) minimum and 4.8 inches (122 mm) maximum.*
3. ***Alternate Configuration****. L-shaped or U-shaped grab bars shall be permitted.*

1127A.4.4 Structural strength. *(No change to text)*

1127A.4.5 Surface. *A grab bar and any wall or other surface adjacent to it shall be free of any sharp or abrasive elements~~. Edges shall have a minimum radius of 1/8 inch (3.17 mm).~~ , and shall have rounded edges.*

1127A.4.6 Spacing. *When grab bars are mounted adjacent to a wall, the space between the wall and the grab bars shall be 1 1/2 inches (38 mm). (See Figure 11A-9C). The space between the grab bar and projecting objects below and at the ends shall be 1 1/2 inches (38 mm) minimum. The space between the grab bar and projecting objects above shall be 12 inches (305 mm) minimum.*

Exceptions:

1. The space between the grab bars and shower controls, shower fittings, and other grab bars above shall be permitted to be 1 1/2 inches (38 mm) minimum.

2. For L-shaped or U-shaped grab bars the space between the walls and the grab bar shall be 1 1/2 inches (38 mm) minimum for a distance of 6 inches (152 mm) on either side of the inside corner between two adjacent wall surfaces.

1127A.5 Bathing facilities.

1127A.5.1 General. *(No change to text)*

1127A.5.2 Bathtubs. *Bathtubs required to be accessible shall comply with the following:*

~~1.~~ 1127A.5.2.1 Floor space. *~~Clear floor space at bathtubs shall be as shown in Figure 11A-9E.~~*
Clearance in front of bathtubs shall extend the length of the bathtub and shall be 48 inches (1219 mm) wide minimum for forward approach and 30 inches (762 mm) wide minimum for parallel approach. A lavatory complying with Section 1127A.3 shall be permitted at the control end of the clearance. When a permanent seat is provided at the head end of the bathtub, the clearance shall extend 12 inches (305 mm) minimum beyond the wall at the head end of the bathtub. (See Figure 11A-9E).

~~2.~~ ***1127A.5.2.2* Seat.** ~~An~~ *A removable in-tub seat or a permanent seat at the head end of the tub shall be provided* ~~*as shown in Figures 11A-9E and 11A-9F*~~*. The structural strength of seats and their attachments shall comply with Section 1127A.4.4. Seats shall be mounted securely and shall not slip during use.*

The top of bathtub seats shall be 17 inches (432 mm) minimum and 19 inches (483 mm) maximum above the bathroom finish floor. The depth of a removable in-tub seat shall be 15 inches (381 mm) minimum and 16 inches (406 mm) maximum. Permanent seats at the head end of the bathtub shall be 15 inches (381 mm) deep minimum and shall extend from the back wall to or beyond the outer edge of the bathtub. (See Figure 11A-9E)

~~3.~~ ***1127A.5.2.3* Grab bars.** *Grab bars complying with* ~~*Sections 1127A.4.3, 1127A.4.4 and 1127A.4.5*~~ *Section 1127A.4 shall be provided* ~~*as shown in Figures 11A-9F and 11A-9G*~~ *in accordance with this section. (See Figure 11A-9F)*

When separate grab bars are required on adjacent walls at a common mounting height, an L-shaped or U-shaped grab bar meeting the dimensional requirements of this section, shall be permitted.

1. ***Bathtubs with permanent seats.*** *Two horizontal grab bars shall be installed on the back wall. One shall be located 33 inches (838 mm) minimum and 36 inches (914 mm) maximum above the finish floor measured to the top of the gripping surface, and the other shall be located 8 inches (203 mm) minimum and 10 inches (254 mm) maximum above the rim of the bathtub. Each grab bar shall be 48 inches (1219 mm) long minimum, and shall be installed 15 inches (381 mm) maximum from the head end wall and 12 inches (305 mm) maximum from the control end wall.*

   A grab bar 24 inches (610 mm) long minimum shall be installed on the control end wall at the front edge of the bathtub.

2. ***Bathtubs with removable seats.*** *Two horizontal grab bars shall be installed on the back wall. One shall be located 33 inches (838 mm) minimum and 36 inches (914 mm) maximum above the finish floor measured to the top of the gripping surface, and the other shall be located 8 inches (203 mm) minimum and 10 inches (254 mm) maximum above the rim of the bathtub. Each grab bar shall be 24 inches (610 mm) long minimum and shall be installed 24 inches (610 mm) maximum from the head end wall and 12 inches (305 mm) maximum from the control end wall.*

   A grab bar 24 inches (610 mm) long minimum shall be installed on the control end wall at the front edge of the bathtub. A grab bar 12 inches (305 mm) long minimum shall be installed on the head end wall at the front edge of the bathtub.

~~***4. Controls.*** *Faucets and other controls shall be located as shown in Figure 11A-9F. They shall be operable with one hand and shall not require tight grasping, pinching or twisting of the wrist. The force required to activate controls shall be no greater than a 5 pound force (lbf) (22.2 N).*~~

1127A.5.2.4 Controls. *Faucets and controls (other than drain stoppers) shall be located on an end wall between the bathtub rim and grab bar, and between the open side of the bathtub and the centerline of the width of the bathtub. (See Figure 11A-9F).*

Controls shall be operable with one hand and shall not require tight grasping, pinching or twisting of the wrist. The force required to activate controls shall be no greater than 5 pounds (22.2 N).

~~5.~~ ***1127A.5.2.5* Shower spray unit.** *A shower spray unit with a hose at least* ~~*60*~~ *59 inches (1524 mm) long that can be used both as a fixed shower head and as a hand-held shower shall be provided.*

The shower spray unit shall have an on/off control with a non-positive shut-off. If an adjustable-height shower head on a vertical bar is used, the bar shall be installed so as not to obstruct the use of grab bars.

~~6.~~ ***1127A.5.2.6* Bathtub enclosures.** ~~*If provided, enclosures for bathtubs shall not obstruct controls or transfer from wheelchairs onto bathtub seats or into tubs. Enclosures on bathtubs shall not have tracks mounted on their rims.*~~

When provided, enclosures for bathtubs shall not obstruct controls, faucets, shower and spray units, or obstruct transfer from wheelchairs onto bathtub seats or into bathtubs. Enclosures on bathtubs shall not have tracks installed on the rim of the open face of the bathtub.

~~***1127A.5.3 Showers.*** *Showers required to be accessible shall comply with the following:*~~
~~*1.* ***Size.*** *Showers shall be consistent with one of the following:*~~
~~*(1) 60 inches (1524 mm) minimum in width between wall surfaces and 30 inches (762 mm) minimum in depth with a full opening width on the long side; or*~~
~~*(2) 42 inches (1067 mm) in width between wall surfaces and 48 inches (1219 mm) minimum in depth with an entrance opening of 42 inches (1067 mm); or*~~
~~*(3) showers 60 inches (1524 mm) minimum in width may be 36 inches (914 mm) minimum in depth as long as the entrance opening width is a minimum 36 inches (914 mm).*~~
~~*2.* ***Thresholds.*** *When a threshold or recessed drop is permitted, it shall be a maximum of 1/2 inch (12.7 mm) in height and shall be beveled or sloped at an angle not exceeding 45 degrees (100 percent gradient) from the horizontal.*~~
~~*3.* ***Multiple Showers.*** *Where, within the same functional area, two or more accessible showers are provided, there shall be at least one shower constructed opposite hand from the other or others (i.e., one left-hand control versus right-hand controls).*~~
~~*4.* ***Accessories.*** *Shower accessories shall include:*~~
~~*4.1.* ***Water Controls.*** *Water controls of a single-lever design shall be located on the side wall of the compartment adjacent to the seat and operable with a maximum force of 5 pounds (22.2 N), mounted at 40 inches (1016 mm) [plus or minus 1 inch (25.4 mm) tolerance] above the shower floor. The centerline of the controls shall be within a reach range of no less than 18 inches (457 mm) and no more than 24 inches (610 mm) from the rear edge of the seat.*~~
~~*4.2.* ***Hand-held sprayer unit.*** *A flexible hand-held sprayer unit with a hose at least 60 inches (1524 mm) long shall be provided within reach range of the seat at a distance not to exceed 27 inches (686 mm) horizontally measured from the rear seat edge to the centerline of the mounting bracket. This unit shall be mounted at a maximum height of 48 inches (1219 mm) [plus or minus 1 inch (25.4 mm) tolerance] above the shower floor.*~~
~~*4.3.* ***Sprayer unit alternative.*** *Where accessible shower facilities are provided in areas subject to excessive vandalism, in lieu of providing the fixed flexible hose, two wall-mounted shower heads shall be installed. Each shower head shall be installed so that it can be operated independently of the other and shall have swivel angle adjustments, both vertically and horizontally. One shower head shall be located at a height of 48 inches (1219 mm) [plus or minus 1 inch (25.4 mm) tolerance] above the floor.*~~
~~*4.4.* ***Floor slope.*** *The maximum slope of the floor shall be 2 percent per foot in any direction. Where drains are provided, grate openings shall be a maximum of 1/4 inch (6.35 mm) and located flush with the floor surface.*~~
~~*5.* ***Shower fixtures.*** *Shower fixtures shall include:*~~
~~*5.1. A folding seat located within 27 inches (686 mm) of the controls, mounted 18 inches (457 mm) above the floor and with a minimum space of 1 inch (25.4 mm) and maximum space of 11/2 inches (38.1 mm) allowed between the edge of the seat and any wall. When folded, the seat shall not extend more than 6 inches (152.4 mm) from the mounting wall. (See Figures 11A-9H, 11A-9I, 11A-9J and 11A-9K).*~~
~~*5.2. Grab bars located on walls adjacent to and opposite the seat. Grab bars shall comply with the diameter, loading and projection requirements of Sections 1127A.4.3, 1127A.4.4 and 1127A.4.5. Grab bars shall be mounted between a minimum of 33 inches (838 mm) and a maximum of 36 inches (914 mm) above the shower floor with an L-shaped grab bar mounted on walls opposite and adjacent to the front edge of the seat, but not extended to include that portion of wall over the seat. (See Figure 11A-9H or 11A-9I).*~~
~~*6.* ***Soap dish.*** *When a soap dish is provided, it shall be located on the control wall at a maximum height of 40 inches (1016 mm) above the shower floor, and within reach limits from the seat.*~~
~~*7.* ***Enclosures.*** *Enclosures, when provided for shower stalls, shall not obstruct transfer from wheelchairs onto shower seats.*~~
~~***Note:*** *See Figures 11A-9H, 11A-9I, 11A-9J and 11A-9K.*~~

~~***1127A.5.3.1*** *Open showers. Where no separate shower compartments are provided, the shower for persons with disabilities shall be located in a corner with L-shaped grab bars extending along two adjacent walls with a folding seat adjacent to the shower controls. (See Figures 11A-9H, 11A-9I, 11A-9J and 11A-9K).*~~

1127A.5.3 Shower compartments. *Shower compartments required to be accessible shall comply with this section. (See Figures 11A-9H, 11A-9I, 11A-9J and 11A-9K)*

1127A.5.3.1 Size and clearance.

1. ***Standard roll-in-shower compartments****. Standard roll-in shower compartments shall meet one of the following:*

   1.1. *30 inches (762 mm) minimum in depth and 60 inches (1524 mm) minimum in width between wall surfaces measured at center points of opposing sides, with a full opening width on the long side.*

   A clear floor space 30 inches (914 mm) minimum by 60 inches (1524 mm) minimum shall be provided adjacent to the open face of the shower compartment; or

1.2. 42 inches (1067 mm) in width between wall surfaces, and 48 inches (1219 mm) minimum in depth with an entrance opening of 42 inches (1067 mm).

2. ***Alternate roll-in shower compartments.*** *Alternate roll-in shower compartments shall be 36 inches (914 mm) minimum in depth and 60 inches (1524 mm) minimum in width between wall surfaces measured at center points of opposing sides. A 36 inch (914 mm) wide minimum entry shall be provided at one end of the long side of the compartment.*

1127A.5.3. 2 Thresholds. *Thresholds in roll-in shower compartments shall be 1/2 inch (12.7 mm) maximum in height and shall be beveled with a slope no greater than 1 unit vertical in 2 units horizontal (50-percent slope). (See Figure 11A-1F)*

Exception: *Changes in level not exceeding 1/4 inch (6.35 mm) shall be permitted to be vertical.*

1127A.5.3.3 Enclosures. *Enclosures, when provided for shower compartments, shall not obstruct controls, faucets, shower spray units, and transfer from wheelchairs onto shower seats.*

1127A.5.3.4 Floor. *Shower compartment floor surfaces shall be stable, firm and slip resistant. The maximum slope of the floor shall be 1/4 inch (6.35 mm) per foot (2.083 percent slope) in any direction. When drains are provided, grate openings shall be 1/4 inch (6.35 mm) maximum and located flush with the floor surface.*

1127A.5.3.5 Controls. *Controls, faucets and shower spray units in shower compartments shall be operable with one hand, and shall not require tight grasping, pinching, or twisting of the wrist. The force required to activate operable parts shall be 5 pounds (22.2 N) maximum. All controls and faucets shall be of a single-lever design.*

1127A.5.3.5.1 Standard roll-in shower compartments. *In standard roll-in shower compartments, operable parts of controls and faucets shall be installed on the back wall of the compartment adjacent to the seat wall, 19 inches (483 mm) minimum and 27 inches (686 mm) maximum from the seat wall.*

Operable parts of controls and faucets shall be located above the grab bar, but no higher than 48 inches (1219 mm) above the shower floor, with their centerline at 39 inches (991 mm) minimum and 41 inches (1041 mm) maximum above the shower floor.

Operable parts of the shower spray unit, including the handle, shall be installed on the back wall adjacent to the seat wall, 19 inches (483 mm) minimum and 27 inches (686 mm) maximum from the seat wall.

Operable parts of the shower spray unit, including the handle, shall be located above the grab bar, but no higher than 48 inches (1219 mm) above the shower floor. (measured to the top of the mounting bracket)

1127A.5.3.5.2 Alternate roll-in shower compartments. *In alternate roll-in shower compartments, operable parts of controls and faucets shall be installed on the side wall of the compartment adjacent to the seat wall, 19 inches (483 mm) minimum and 27 inches (686 mm) maximum from the seat wall.*

Operable parts of controls and faucets shall be located above the grab bar, but no higher than 48 inches (1219 mm) above the shower floor, with their centerline at 39 inches (991 mm) minimum and 41 inches (1041 mm) maximum above the shower floor.

Operable parts of the shower spray unit, including the handle, shall be installed on the following locations:

1. *On the side wall of the compartment adjacent to the seat wall, 17 inches (432 mm) minimum and 19 inches (483 mm) maximum from the seat wall; or*
2. *On the back wall opposite the seat, 15 inches (381 mm) maximum, left or right, of the centerline of the seat.*

   Operable parts of the shower spray unit, including the handle, shall be located above the grab bar, but no higher than 48 inches (1219 mm) above the shower floor.

1127A.5.3.6 Hand-held shower sprayer unit. *A flexible hand held shower spray unit with a hose at least 59 inches (1524 mm) long that can be used both as a fixed shower head and as a hand-held shower shall be provided.*

The shower spray unit shall have an on/off control with a non-positive shut-off. If an adjustable-height shower head on a vertical bar is used, the bar shall be installed so as not to obstruct the use of grab bars.

1127A.5.3.6.1 Sprayer unit alternative. *When accessible shower facilities are provided in areas subject to excessive vandalism, in lieu of providing the fixed flexible hose, two wall-mounted shower heads shall be installed. Each shower head shall be installed so that it can be operated independently of the other and shall have swivel angle adjustments, both vertically and horizontally. One shower head shall be located at a height of 48 inches (1219 mm) [plus or minus 1 inch (25.4 mm) tolerance] above the floor.*

1127A.5.3.7 Shower compartment seats. *A seat in a standard roll-in shower compartment shall be a folding type, installed on the side wall adjacent to the controls. The seat shall extend from the back wall to a point within 3 inches (76 mm) of the compartment entry. A seat in an alternate roll-in type shower compartment shall be a folding type, installed on the front wall opposite the back wall, and shall extend from the adjacent side wall to a point within 3 inches (76 mm) of the compartment entry.*

Shower compartment seats shall comply with Section 1127A.4.4, and shall be located within 27 inches (686 mm) of the shower controls. The top of the seat shall be 17 inches (432 mm) minimum and 19 inches (483 mm) maximum above the bathroom finish floor. When folded, the seat shall not extend more than 6 inches (152 mm) from the mounting wall.

1127A.5.3.7.1 Rectangular seats. *The rear edge of a rectangular seat shall be 2½ inches (64 mm) maximum from the seat wall. The front edge of a rectangular seat shall be 15 inches (381 mm) minimum and 16 inches (406 mm) maximum from the seat wall. The side edge of the seat shall be 1½ inches (38 mm) maximum from the adjacent wall.*

1127A.5.3.7.2 L-shaped seats. *The rear edge of an L-shaped seat shall be 2 1/2 inches (64 mm) maximum from the seat wall. The front edge of an L-shaped seat shall be 15 inches (381 mm) minimum and 16 inches (406 mm) maximum from the seat wall. The rear edge of the "L" portion of the seat shall be 1 1/2 inches (38 mm) maximum from the wall. The front edge shall be 14 inches (356 mm) minimum and 15 inches (381 mm) maximum from the wall. The end of the "L" shall be 22 inches (559 mm) minimum and 23 inches (584 mm) maximum from the main seat wall.*

1127A.5.3.8 Grab bars. *Accessible shower compartments shall be provided with grab bars, installed in accordance with Section 1127A.5.3.8.1 or Section 1127A.5.3.8.2. Grab bars shall also comply with Section 1127A.4.*

When multiple grab bars are used, required horizontal grab bars shall be installed at the same height above the finish floor. When separate grab bars are required on adjacent walls at a common mounting height, L-shaped or U-shaped grab bars meeting the dimensional requirements of Section 1127A.5.3.8.1 or Section 1127A.5.3.8.2 shall be permitted. (See Figure 11A-9H or Figure 11A-9I).

1127A.5.3.8.1 Standard roll-in shower compartments. *Grab bars shall be installed on the back wall and on the side wall opposite the seat. Grab bars above the seat are not permitted. Grab bars shall be installed 6 inches (152 mm) maximum from adjacent walls.*

1127A.5.3.8.2 Alternate roll-in shower compartments. *Grab bars shall be installed on the back wall and the side wall farthest from the compartment entry. Grab bars above the seat are not permitted. Grab bars shall be installed 6 inches (152 mm) maximum from adjacent walls.*

1127A.5.3.9 Soap dish. *When a soap dish is provided, it shall be located on the control wall at a maximum height of 40 inches (1016 mm) above the shower floor, and within the reach limits from the seat.*

1127A.5.3.10 Open showers*. When no separate shower compartments are provided, the shower for persons with disabilities shall be located in a corner with L-shaped grab bars extending along two adjacent walls with a folding seat adjacent to the shower controls. (See Figure 11A-9J)*

1127A.5.3.11. Multiple showers. *When two or more accessible showers are provided within the same functional area, there shall be at least one shower constructed opposite hand from the other or others (i.e., one left-hand control versus right-hand controls).*

1127A.6 Lockers.

1127A.6.1 General. *Where lockers are provided for residents or guests, at least one locker and not less than 1 percent of all lockers shall be accessible to persons with disabilities. ~~A path of travel~~ An accessible route not less than 36 inches (914 mm) in clear width shall be provided to these lockers. See Section ~~1127A.9~~ 1138A for required clear space, allowable reach ranges and requirements for control and operating mechanisms.*

1127A.7 Signs.

1127A.7.1 General. *(No change to text)*

1127A.7.2 Identification symbols. *Doorways leading to sanitary facilities (toilet or bathing rooms) shall be identified by a geometric symbol in compliance with this section. Geometric symbols shall be centered horizontally on the door at a height of 58 inches (1473 mm) minimum and 60 inches (1524 mm) maximum above the finish floor ~~or ground surface~~ measured to the center of the symbol. When a door is provided, the symbol shall be mounted within 1 inch (25 mm) of the vertical centerline of the door.*

Directional signs indicating the location of the nearest accessible toilet or bathing rooms shall be provided. Such directional signs shall comply with Section 1143.5 and shall include the International Symbol of Accessibility.

Edges of accessibility signage shall be rounded, chamfered or eased. Corners shall have a minimum radius of 1/8 inch (3.2 mm). See Section ~~1143A.10~~ 1143A for additional signage requirements applicable to sanitary facilities.

1127A.8 Toilet room fixtures and accessories.

1127A.8.1 Towel, sanitary napkins, waste receptacles. *(No change to text)*

1127A.8.2 Toilet tissue dispensers. *~~Toilet tissue dispensers shall be located on the wall within 12 inches (305 mm) of the front edge of the toilet seat. Dispensers that control delivery or that do not permit continuous paper flow shall not be used. (See Figure 11A-9B).~~*

Toilet tissue dispensers shall be located on the wall or partition closest to the water closet, 7 inches (180 mm) minimum and 9 inches (230 mm) maximum in front of the water closet measured to the centerline of the dispenser. The outlet of the dispenser shall be below the grab bar, 19 inches (483 mm) minimum above the finish floor. The outlet of the dispenser shall not be located behind grab bars. Dispensers shall not be of a type that controls delivery or that does not allow continuous paper flow. (See Figure 11A-9B).

1127A.8.3 Mirrors. *Where mirrors are provided, at least one shall be accessible. ~~Mirrors shall be mounted with the bottom edge no higher than 40 inches (1016 mm) from the floor.~~*
Mirrors located above lavatories or countertops shall be installed with the bottom edge of the reflecting surface 40 inches (1016 mm) maximum above the finish floor. Mirrors not located above lavatories or countertops shall be installed with the bottom edge of the reflecting surface 35 inches (889 mm) maximum above the finish floor.

1127A.9 Space allowances and reach ranges in common use areas

Space allowances and reach ranges in common use areas shall comply with Section 1138A.

~~1127A.9.1 Wheelchair passage width.~~ *~~The minimum clear width for single wheelchair passage shall be 36 inches (914 mm) continuously. (See Figure 11A-1E).~~*

~~Exception:~~ *~~Thirty-two inches (813 mm) in width is acceptable at a point not to exceed 24 inches (610 mm) in length.~~*

~~1127A.9.2 Width for wheelchair passing.~~ *~~The minimum width for two wheelchairs to pass is 60 inches (1524 mm) (see Figure 11A-1F).~~*

~~1127A.9.3 Wheelchair turning space.~~ *~~The space required for a wheelchair to make a 180 degree turn is a clear space of 60 inches (1524 mm) diameter (See Figure 11A-1D(a) or a T-shaped space, see Figure 11A-1D(b)).~~*

~~1127A.9.4 Clear floor or ground space for wheelchairs.~~

~~1127A.9.4.1 Size and approach.~~ *~~The minimum clear floor or ground space required to accommodate a single, stationary wheelchair and occupant is 30 inches by 48 inches (762 mm by 1219 mm). (See Figure 11A-1G.) The minimum clear floor or ground space for wheelchairs may be positioned for forward or parallel approach to an object (see Figure 11A-1G). Clear floor or ground space for wheelchairs may be part of the knee space required under some objects.~~*

~~1127A.9.4.2 Relationship of maneuvering clearances to wheelchair spaces.~~ *~~One full unobstructed side of the clear floor or ground space for a wheelchair shall adjoin or overlap an accessible route or adjoin another~~*

~~*wheelchair clear floor space. If a clear floor space is located in an alcove or otherwise confined on all or a part of three sides, additional maneuvering clearances shall be provided as shown in Figure 11A-1H.*~~

~~***1127A.9.4.3 Surfaces of wheelchair spaces.*** *Clear floor or ground spaces for wheelchairs shall comply with Sections 1119A.2, 1120A.3 and 1121A.*~~

~~***1127A.9.4.3.1 Gratings.*** *Gratings located in ground and floor surfaces along accessible routes shall be limited to spaces no greater than ½-inch (12.7 mm) wide in one direction. If gratings have elongated openings, they shall be placed so that the long dimension is perpendicular to the dominant direction of traffic.*~~

~~***1127A.9.5 Reach ranges.***~~

~~***1127A.9.5.1 Forward reach.*** *If the clear floor space allows only forward approach to an object, the maximum high forward reach allowed shall be 48 inches (1219 mm) and the minimum low forward reach shall be unobstructed and no less than 15 inches (381 mm) above the floor (see Figure. 11A-1I(a)). If the high forward reach is over an obstruction, reach and clearances shall be as shown in Figure 11A-1I(b).*~~

~~***1127A.9.5.2 Side reach.*** *If the clear floor space allows parallel approach by a person in a wheelchair, the maximum high side reach allowed shall be 54 inches (1372 mm) and the low side reach shall be no less than 9 inches (228.6 mm) above the floor (see Figure 11A-1J(a) and 11A-1J(b)). If the side reach is over an obstruction, the reach and clearances shall be as shown in Figure 11A-1J (c).*~~

~~***1127A.9.6 Controls and operating mechanisms.***~~

~~***Note:*** *See also Section 1142A, for electrical installation.*~~

~~***1127A.9.6.1 General.*** *Controls and operating mechanisms in accessible spaces, along accessible routes or as part of accessible elements (e.g., light switches and dispenser controls) shall comply with this section.*~~

~~***1127A.9.6.2 Clear floor space.*** *Clear floor space complying with Section 1127A.9.4 that allows a forward or parallel approach by a person using a wheelchair shall be provided at controls, dispensers, receptacles and other operable equipment.*~~

~~***1127A.9.6.3 Height.*** *Controls shall be located no higher than 48 inches (1219 mm), and no lower than 15 inches (381 mm), above the finished floor measured to the center of the grip. If the reach is over an obstruction (for example, washer or dryer) between 20 and 25 inches (508 and 635 mm) in depth, the maximum height is reduced to 44 inches (1118 mm) for forward approach, or 46 inches (1168 mm) for side approach, provided the obstruction is no more than24 inches (610 mm) in depth. Controls that do not satisfy these specifications are acceptable, provided that comparable controls or outlets, that perform the same functions, are provided within the same area and are accessible.*~~

~~***1127A.9.6.4 Operation.*** *Controls and operating mechanisms shall be operable with one hand and shall not require tight grasping, pinching or twisting of the wrist. The force required to activate controls shall be no greater than 5 pounds (22.2 N) of force.*~~

1127A.10 Common accessible laundry rooms.

1127A.10.1 General. *(No change to text)*

1127A.10.2 Clear floor space. *(No change to text)*

1127A.10.3 Controls and operating mechanisms. *Clothes washers and dryers including stacked clothes washers and dryers required to be accessible shall have controls and operating mechanisms (including doors, coin slots, lint screens, detergent and bleach compartments) within the reach range of a seated user. Controls and operating mechanisms shall be located no higher than 48 inches (1219 mm), and no lower than 15 inches (381 mm), above the finished floor measured to the center of the grip. If the reach is over an obstruction (for example, washer or dryer).* ~~*between 20 and 25 inches (508 and 635 mm) in depth, the maximum height is reduced to 44 inches (1118 mm) for forward approach, or 46 inches (1168 mm) for side approach*~~ *operating mechanisms shall be located within the reach ranges specified in Section 1138A.3. Controls and operating mechanisms that do not satisfy these specifications are acceptable, provided that comparable mechanisms, controls or outlets, that perform the same functions, are provided within the same area and are accessible.*

Controls and operating mechanisms shall be operable with one hand and not require tight grasping, pinching or twisting of the wrist. The force required to activate controls and operating mechanisms shall be no greater than 5 pounds (22.2 N).

1127A.10.4 Washing machines and clothes dryer. *Washing machines and clothes dryers in accessible common use laundry rooms shall be front loading.*

The bottom of the opening to the laundry compartment shall be located 15 inches (381 mm) minimum and 36 inches (914 mm) maximum above the finish floor.

1127A.11 Storage.

1127A.11.1 General. *If fixed storage facilities such as cabinets, shelves, closets or drawers are provided where access is required by Sections 1.8.2.1.2 and 1102A, at least one of each type of facility provided shall comply with this section. Additional storage may be provided outside of the reach ranges specified in Section 1138A.3 ~~shown in Figure 11A-1J~~.*

1127A.11.2 Clear floor space. *A clear floor space at least 30 inches by 48 inches (762 mm by 1219 mm) complying with Section ~~1127A.9.4~~ 1138A.1.4 that allows either a forward or parallel approach by a person using a wheelchair shall be provided at accessible storage facilities.*

1127A.11.3 Height. *Accessible storage spaces and clothes rods shall be within at least one of the reach ranges specified in Section ~~1127A.9.5~~ 1138A.3. ~~Clothes rods shall be a maximum of 54 inches (1372 mm) from the floor for a side approach (see Figure 11A-1J).Where the distance from the wheelchair to the clothes rod or shelf exceeds 10 inches (254 mm), as in closets without accessible doors, the height and depth to the rod or shelf shall comply with Figure 11A-1J~~. (See Figure 11A-1J and Figure 11A-1I)*

1127A.11.4 Hardware. *Hardware for accessible storage facilities shall comply with Section ~~1127A.9.6~~ 1138A.4. Touch latches and U-shaped pulls are acceptable.*

1127A.12 Fixed or built-in seating, tables and counters.

1127A.12.1 Minimum seating. *(No change to text)*

1127A.12.2 ~~Seating~~ Clear floor space*. When seating spaces for persons in wheelchairs are provided at fixed tables or counters, clear floor space complying with Section ~~1127A.9.4~~ 1138A.1.4 positioned for a forward approach shall be provided. Such clear floor space shall not overlap the required knee and toe space by more than 19 inches (483 mm). (See Figure 11A-1K).*

1127A.12.3 ~~Knee clearance~~ Knee and toe space*. When seating for persons in wheelchairs is provided at fixed tables or counters, knee and toe space ~~spaces at least 27 inches (686 mm) high, 30 inches (762 mm) wide and 19 inches (483 mm) deep~~ complying with Section 1138A.2 shall be provided. (See Figure 11A-1K).*

1127A.12.4 Height of work surfaces. *The tops of tables and counters shall be 28 inches to 34 inches (711 mm to 864 mm) from the finish floor ~~or ground~~.*

> ***Exception:*** *When food or drink is served for consumption at a counter exceeding 34 inches (864 mm) in height, only a portion of the main counter, 60 inches (1524 mm) minimum in length, shall be provided in compliance with this section.*

NOTE:
Authority Cited: Health and Safety Code Sections 17040, 17050, 17920.9, 17921, 17921.3, 17921.6, 17921.10, 17922, 17922.6, 17922.12, 17927, 17928, 17959.6, 18300, 18552, 18554, 18620, 18630, 18640, 18670, 18690, 18691, 18865, 18871.3, 18871.4, 18873, 18873.1, 18873.2, 18873.3, 18873.4, 18873.5, 18938.3, 18944.11 and 19990; and Government Code Section 12955.1.

Reference: Health and Safety Code Sections 17000 through 17062.5, 17910 through 17995.5, 18200 through 18700, 18860 through 18874, and 19960 through 19997; and Government Code Sections 12955.1 and 12955.1.1.

17. HCD proposes to amend Section 1132A as follows:

SECTION 1132A
DOORS

1132A.1 Primary entry doors and required exit doors. *~~The primary entry door and all required exit doors shall comply with the requirements of this section.~~ The width and height of primary entry doors and all required exit doors shall comply with Section 1126A.1. The requirements of Sections 1126A.3 shall apply to maneuvering clearances at the side of the door exposed to common or public use spaces (e.g., entry or exit doors which open from the covered multifamily dwelling unit into a corridor, hallway or lobby, or directly to the outside).*

1132A.2 Interior doors and secondary exterior doors. *Except as allowed by Section 1109A.2, interior doors intended for user passage and secondary exterior doors shall comply with this section. The provisions of this section shall apply to the dwelling unit side of doors leading from the interior of the dwelling unit to an unfinished basement or an attached garage.*

1132A.3 Width and height of interior doors and secondary exterior doors. *Doors shall comply with the following:*

1.Doors shall not be less than 6 feet 8 inches (2032 mm) in height.

2.Swinging doors shall provide a net clear opening width of not less than 32 inches (813 mm), measured with the door or doors positioned at an angle of 90 degrees from the closed position. A 34-inch (864 mm) door is acceptable. ~~The primary entry door and all required exit doors shall comply with the requirements of Section 1126A.1.~~

3.Swinging doors shall be capable of opening at least 90 degrees.

4.A nominal 32-inch (813 mm) clear opening provided by a standard 6-foot wide (1829 mm) sliding patio door assembly is acceptable.

5.A pair of doors, manual or automatic, must have at least one leaf which provides a clear width of not less than 32 inches (813 mm), measured with the door positioned at an angle of 90 degrees from its closed position.

6.The width of any component in the means of egress system shall not be less than the minimum width required by Section 1005.

1132A.7 Type of lock or latch. *The type of latch and lock required for all doors shall be in accordance with Section 1132A.8 and Chapter 10, Section 1008.*

NOTE:
Authority Cited: Health and Safety Code Sections 17040, 17050, 17920.9, 17921, 17921.3, 17921.6, 17921.10, 17922, 17922.6, 17922.12, 17927, 17928, 17959.6, 18300, 18552, 18554, 18620, 18630, 18640, 18670, 18690, 18691, 18865, 18871.3, 18871.4, 18873, 18873.1, 18873.2, 18873.3, 18873.4, 18873.5, 18938.3, 18944.11 and 19990; and Government Code Section 12955.1.

Reference: Health and Safety Code Sections 17000 through 17062.5, 17910 through 17995.5, 18200 through 18700, 18860 through 18874, and 19960 through 19997; and Government Code Sections 12955.1 and 12955.1.1.

---

18. HCD proposes to amend Section 1133A as follows:

SECTION 1133A
KITCHENS

1133A.2 Clear floor space. *(No change to text)*

1133A.2.1 Clear width. *Kitchens shall have a minimum clear width measured between any cabinet, countertop or the face of any appliance (excluding handles and controls) that projects into the kitchen and the opposing cabinet, countertop, appliance or wall as follows:*

1. *U-shaped kitchens, designed with parallel approach at a range or cooktop located at the base of the U, shall have a minimum clear width of at least 60 inches (1524 mm). (See Figure 11A-10A).*

2. *U-shaped kitchens, designed with a cooktop or sink located at the base of the U, which provides a ~~30-inch wide (762 mm)~~ knee and toe space in accordance with Section 1133A.7 ~~to a height of 27 inches (686 mm) above the floor~~ to allow for a forward approach, shall have a clear width of at least 48 inches (1219 mm). (See Figure 11A-10A).*

3. *All other kitchen designs shall provide a minimum clear width of at least 48 inches (1219 mm). (See Figure 11A-10A).*

1133A.3 Removable base cabinets. *Base cabinets directly under the kitchen sink counter area, including toeboard and shelving, shall be removable without the use of specialized tools or specialized knowledge in order to provide ~~clearance~~ knee and toe space for a wheelchair. The finish floor beneath the kitchen sink counter area shall be extended to the wall.*

1133A.4 Countertops. *(No change to text)*

1133A.4.1 Repositionable countertops. *Repositionable countertops shall be provided in a minimum of 5 percent of the covered multifamily dwelling units. Repositionable countertops shall comply with the following:*

1. *The kitchen sink and work surface space required by 1133A.4 shall be designed to enable repositioning to a minimum height of 28 inches (711 mm).*

2. *Base cabinets directly under the kitchen sink counter area and work surface shall be removable ~~to provide clearance for a wheelchair~~ as required in Section 1133A.3.*

3. *The sides of adjacent cabinets and the back wall, which may become exposed to moisture or food handling when a countertop is lowered, shall be constructed of durable, nonabsorbent materials appropriate for such uses.*

4. *Finished flooring shall be extended to the wall beneath the sink and work surface.*

   Exceptions:

   1. *Stone, cultured stone and tiled countertops may be used without meeting the repositioning requirements.*

   2. *Two 15-inch (381 mm) minimum width breadboards may be provided in lieu of the required 30 inches (762 mm) of countertop work surface.*

1133A.7 Knee and toe space. *Knee and toe space, when required by Section 1133A, shall comply with the following:*

1. *The knee and toe space shall be clear and unobstructed, or removable base cabinets in compliance with Section 1133A.3 shall be provided.*
2. *The knee and toe space shall be 30 inches (762 mm) wide minimum, centered on the sink, countertop or appliance.*
3. *The knee space shall be at least 27 inches (686 mm) above the finish floor.*
4. *The knee space shall be 11 inches (279 mm) deep minimum at 9 inches (229 mm) above the finish floor, and 8 inches (203 mm) deep minimum at 27 inches (686 mm) above the finish floor, measured from the front edge.*
5. *The toe space shall be at least 9 inches (229 mm) above the finish floor.*
6. *A clear floor space shall not extend into the knee and toe space more than 19 inches (483 mm).*

1133A.7.1 Plumbing protection. *Water supply and drain pipes under kitchen sinks shall be insulated or otherwise covered. There shall be no sharp or abrasive surfaces under kitchen sinks.*

NOTE:
Authority Cited: Health and Safety Code Sections 17040, 17050, 17920.9, 17921, 17921.3, 17921.6, 17921.10, 17922, 17922.6, 17922.12, 17927, 17928, 17959.6, 18300, 18552, 18554, 18620, 18630, 18640, 18670, 18690,

18691, 18865, 18871.3, 18871.4, 18873, 18873.1, 18873.2, 18873.3, 18873.4, 18873.5, 18938.3, 18944.11 and 19990; and Government Code Section 12955.1.

Reference: Health and Safety Code Sections 17000 through 17062.5, 17910 through 17995.5, 18200 through 18700, 18860 through 18874, and 19960 through 19997; and Government Code Sections 12955.1 and 12955.1.1.

19. HCD proposes to amend Section 1134A as follows:

SECTION 1134A
BATHING AND TOILET FACILITIES

1134A.7 Water closets. *Water closets in bathrooms or powder rooms required to be accessible shall comply with this section.*

1. ***Floor space and location.*** *The minimum floor space provided at a water closet shall be 48 inches (1219 mm) in clear width. The clear floor space shall extend past the front edge of the water closet at least 36 inches (914 mm). See Figure 11A-9M.*

   Exception*: The 48-inch (1219 mm) minimum clear width may be reduced to 36 inches (914 mm) for lavatories, cabinets, wing walls, or privacy walls located immediately adjacent to a water closet which extend no more than 24 inches (610 mm) in depth.*

   Water closets shall be located within bathrooms in a manner that permits a grab bar to be installed on one side of the fixture. The centerline of the water closet shall be 16 inches (406 mm) minimum to 18 inches (457 mm) maximum from a grab bar wall or partition. In locations where water closets are adjacent to non-grab bar walls, vanities, lavatories or bathtubs, the centerline of the fixture shall be a minimum of 18 inches (457 mm) from the obstacle.

2. ***Reinforced walls for grab bars.*** *Where the water closet is not placed adjacent to a side wall capable of accommodating a grab bar, the bathroom shall have provisions for installation of floor-mounted, foldaway or similar alternative grab bars.*

   Where the water closet is placed adjacent to a side wall, reinforcement shall be installed on both sides or one side and the back. If reinforcement is installed at the back, it shall be installed between 32 inches (813 mm) and 38 inches (965 mm) above the floor. The grab bar reinforcement shall be a minimum of 6 inches (152.4 mm) nominal in height. The backing shall be a minimum of 40 inches (1016 mm) in length.

   Reinforcement installed at the side of the water closet shall be installed 32 inches to 38 inches (813 mm to 965 mm) above the floor. The reinforcement shall be installed a maximum of 12 inches (305 mm) from the rear wall and shall extend a minimum of 26 inches (660 mm) in front of the water closet. The grab bar reinforcement shall be a minimum of 6 inches (152.4 mm) nominal in height.

3. ***Seat height.*** *The minimum height of water closet seats shall be 15 inches (381 mm) above the floor.*

4. ***Water closet controls.*** *Water closet controls shall be mounted no more than 44 inches (1118 mm) above the floor. The force required to activate controls shall be no greater than 5 pounds ~~force~~ (22.2 N).*

NOTE:
Authority Cited: Health and Safety Code Sections 17040, 17050, 17920.9, 17921, 17921.3, 17921.6, 17921.10, 17922, 17922.6, 17922.12, 17927, 17928, 17959.6, 18300, 18552, 18554, 18620, 18630, 18640, 18670, 18690, 18691, 18865, 18871.3, 18871.4, 18873, 18873.1, 18873.2, 18873.3, 18873.4, 18873.5, 18938.3, 18944.11 and 19990; and Government Code Section 12955.1.

Reference: Health and Safety Code Sections 17000 through 17062.5, 17910 through 17995.5, 18200 through 18700, 18860 through 18874, and 19960 through 19997; and Government Code Sections 12955.1 and 12955.1.1.

20. HCD proposes to amend Section 1136A as follows:

SECTION 1136A
ELECTRICAL RECEPTACLE, SWITCH AND CONTROL HEIGHTS

1136A.1 Receptacle heights. *Electrical receptacle outlets on branch circuits of 30 amperes or less and communication system receptacles shall be located no more than 48 inches (1219 mm) measured from the top of the receptacle outlet box ~~or receptacle housing~~ nor less than 15 inches (381 mm) measured from the bottom of the receptacle outlet box ~~or receptacle housing~~ to the level of the finished floor or working platform. If the reach is over a physical barrier or an obstruction (for example, a kitchen base cabinet), ~~between 20 and 25 inches (508 and 635 mm) in depth, the maximum height measured at the box is reduced to 44 inches (1118 mm) for forward approach, or 46 inches (1168 mm) for side approach, provided the obstruction is no more than 24 inches (610 mm) in depth~~ receptacles shall be located within the reach ranges specified in Section 1138A.3. Physical barriers and ~~O~~obstructions shall not extend more than 25 inches (635 mm) from the wall beneath the receptacle.*

Outlets that do not satisfy these specifications are acceptable provided that comparable outlets, that perform the same functions, are provided within the same area and are accessible.

Exceptions:

1.Receptacle outlets installed as part of permanently installed baseboard heaters are exempt.

2.Required receptacle outlets shall be permitted in floors when adjacent to sliding panels or walls.

3.Baseboard electrical outlets used in relocatable partitions, window walls or other electrical convenience floor outlets are not subject to the minimum height requirements.

4.This section shall not apply to existing buildings when the enforcing agency determines that compliance with these standards would create an unreasonable hardship.

~~***Note:*** *The intent of the measurement is to ensure that receptacles fall within the reach range of 15 inches to 48 inches (381 mm to 1219 mm).*~~

1136A.2 Switch and control heights. *Controls or switches intended to be used by the occupant of the room or area to control lighting and receptacle outlets, appliances, alarms or cooling, heating and ventilating equipment shall be located no more than 48 inches (1219 mm) measured from the top of the outlet box nor less than 15 inches (381 mm) measured from the bottom of the outlet box to the level of the finished floor or working platform. If the reach is over a physical barrier or an obstruction (for example, a kitchen base cabinet) ~~between 20 and 25 inches (508 and 635 mm) in depth, the maximum height is reduced to 44 inches (1118 mm) for forward approach, or 46 inches (1168 mm) for side approach, provided the obstruction is no more than 24 inches (610 mm) in depth~~ switches and controls shall be located within the reach ranges specified in Section 1138A.3. Physical barriers or obstructions shall not extend more than 25 inches (635 mm) from the wall beneath a control.*

Switches and ~~C~~controls that do not satisfy these specifications are acceptable provided that comparable controls or outlets, that perform the same functions, are provided within the same area and are accessible.

Exception: *Appliances (e.g., kitchen stoves, dishwashers, range hoods, microwave ovens and similar appliances) which have controls located on the appliance.*

NOTE:
Authority Cited: Health and Safety Code Sections 17040, 17050, 17920.9, 17921, 17921.3, 17921.6, 17921.10, 17922, 17922.6, 17922.12, 17927, 17928, 17959.6, 18300, 18552, 18554, 18620, 18630, 18640, 18670, 18690, 18691, 18865, 18871.3, 18871.4, 18873, 18873.1, 18873.2, 18873.3, 18873.4, 18873.5, 18938.3, 18944.11 and 19990; and Government Code Section 12955.1.

Reference: Health and Safety Code Sections 17000 through 17062.5, 17910 through 17995.5, 18200 through 18700, 18860 through 18874, and 19960 through 19997; and Government Code Sections 12955.1 and 12955.1.1.

21. HCD proposes to amend Section 1137A as follows:

Division V – FEATURES COMMON TO EXTERIOR AND INTERIOR OF BUILDINGS

Division V Table of Contents

Section 1137A Other Features and Facilities
Section 1138A ~~Reserved~~ Space allowances and reach ranges
Section 1139A Accessible Drinking Fountains
Section 1140A Accessible Telephones
Section 1141A Accessible Swimming Pools
Section 1142A Electrical Receptacle, Switch and Control Heights
Section 1143A Signage
Section 1144A through 1149A Reserved

SECTION 1137A
OTHER FEATURES AND FACILITIES

1137A.1 General. *This division shall apply to features and facilities of common use areas on accessible floors or sites.*

> ***Note:*** *The provisions in this division are not applicable to dwelling units, unless otherwise specified.*

NOTE:
Authority Cited: Health and Safety Code Sections 17040, 17050, 17920.9, 17921, 17921.3, 17921.6, 17921.10, 17922, 17922.6, 17922.12, 17927, 17928, 17959.6, 18300, 18552, 18554, 18620, 18630, 18640, 18670, 18690, 18691, 18865, 18871.3, 18871.4, 18873, 18873.1, 18873.2, 18873.3, 18873.4, 18873.5, 18938.3, 18944.11 and 19990; and Government Code Section 12955.1.

Reference: Health and Safety Code Sections 17000 through 17062.5, 17910 through 17995.5, 18200 through 18700, 18860 through 18874, and 19960 through 19997; and Government Code Sections 12955.1 and 12955.1.1.

---

22. HCD proposes to adopt Section 1138A as follows:

SECTION 1138A
~~Reserved~~
SPACE ALLOWANCES AND REACH RANGES

1138A.1 Space allowances.

1138A.1.1 Single wheelchair passage width. *The minimum clear width for single wheelchair passage shall be 36 inches (914 mm) continuously. (See Figure 11A-1E).*

See Section 1113A for minimum clear width of sidewalks, and Section 1120A for minimum clear width of interior accessible routes.

> ***Exception:*** *32 inches (813 mm) in width is acceptable at a point not to exceed 24 inches (610 mm) in length. The segments with reduced width shall be separated by segments that are 48 inches (1219 mm) long minimum and 36 inches (914 mm) wide minimum.*

1138A.1.2 Width for two wheelchairs passing. *The minimum width for two wheelchairs to pass is 60 inches (1524 mm) (See Figure 11A-1E).*

An accessible route (exterior and interior) with a clear width less than 60 inches (1524 mm) shall provide passing spaces at intervals of 200 feet (60 960 mm) maximum. Passing spaces shall be either: a space 60 inches (1524 mm) minimum by 60 inches (1524 mm) minimum; or, an intersection of two walking surfaces providing a T-shaped space complying with Section 1138A.1.3.1, where the base and arms of the T-shaped space extend 48 inches (1219 mm) minimum beyond the intersection. (See Figure 11A-1L)

1138A.1.3 Wheelchair turning space. *The space required for a wheelchair to make a 180-degree turn ~~is~~ shall be a circular clear space of 60 inches (1524 mm) diameter minimum (See Figure 11A-1D(a)); or a T-shaped space complying with Section 1138A.1.3.1. The circular turning space shall be permitted to include knee and toe clearance complying with Section 1138A.2*

If a person in a wheelchair must make a turn around an obstruction, the minimum clear width of the accessible route shall be as required in Section 1138A.1.5.

1138A.1.3.1 T-shaped turning space. *A T-shaped turning space shall be within a 60 inch (1524 mm) square minimum with arms and base 36 inches (914 mm) wide minimum. Each arm of the T shall be clear of obstructions 12 inches (305 mm) minimum in each direction, and the base shall be clear of obstructions 24 inches (610 mm) minimum. The space shall be permitted to include knee and toe clearance complying with Section 1138A.2 only at the end of either the base or one arm. (See Figure 11A-1D (b))*

1138A.1.3.2 Surfaces of turning spaces. *Turning spaces for wheelchairs shall be stable, firm, slip resistant, and shall comply with Section 1110A.3 or Section 1119A.2. Changes in level are not permitted. Slopes not steeper than 1:48 shall be permitted*

1138A.1.4 Clear floor or ground space for wheelchairs.

1138A.1.4.1 Size and approach. *The minimum clear floor or ground space shall be 30 inches by 48 inches (762 mm by 1219 mm). The minimum clear floor or ground space may be positioned for forward or parallel approach to an object (See Figure 11A-1G). Clear floor or ground space may be part of the knee and toe space required under some objects unless otherwise specified.*

1138A.1.4.2 Relationship of maneuvering clearances to wheelchair spaces. *One full unobstructed side of the clear floor or ground space for a wheelchair shall adjoin an accessible route or adjoin another wheelchair clear floor space.*

If a clear floor space is located in an alcove or otherwise confined on all or a part of three sides, additional maneuvering clearances shall be provided ~~as shown~~ in accordance with the following: (See Figure 11A-1H).

1. ***Forward approach.*** *Alcoves shall be 36 inches (914 mm) wide minimum when the depth exceeds 24 inches (610 mm).*
2. ***Parallel approach.*** *Alcoves shall be 60 inches (1524 mm) wide minimum when the depth exceeds 15 inches (381 mm)*

1138A.1.4.3 Surfaces of wheelchair spaces. *Clear floor or ground spaces for wheelchairs shall be stable, firm, slip resistant, and shall comply with Section 1110A.3 or Section 1119A.2. Changes in level are not permitted. Slopes not steeper than 1:48 shall be permitted*

1138A.1.4.3.1 Gratings. *Gratings located in ground and floor surfaces along accessible routes shall be limited to spaces no greater than 1/2-inch (12.7mm) wide in one direction. If gratings have elongated openings, they shall be placed so that the long dimension is perpendicular to the dominant direction of traffic.*

1138A.1.5 Turn around obstruction. *When the accessible route makes a 180 degree turn around an element which is less than 48 inches (1219 mm) wide, clear width shall be 42 inches (1067 mm) minimum approaching the turn, 48 inches (1219 mm) minimum at the turn and 42 inches (1067 mm) minimum leaving the turn. When the clear width at the turn is 60 inches (1524 mm) minimum, the clear width when approaching and when leaving the turn shall be 36 inches (914 mm) minimum. (See Figure 11A-1C (b)).*

When the accessible route makes a 90 degree turn around an element which is more than 48 inches (1219 mm) wide, clear width shall be 36 inches (914 mm) minimum approaching the turn, at the turn and leaving the turn. (See Figure 11A-1C (a))

1138A.2 Knee and toe space. *When space beneath an accessible element is included as part of a clear floor space, or turning space, the space shall comply with this section. Additional space shall not be prohibited beneath an element but shall not be considered as part of the clear floor space or turning space.*
(See Figure 11A-9D)

1138A.2.1 Knee space. *Space under an element between 9 inches (229 mm) and 27 inches (686 mm) above the finish floor shall be considered knee space. The knee space shall be clear and unobstructed.*

> ***Exception:*** *For lavatories required to be accessible, the knee space shall be at least 29 inches (737 mm) high at the front face and reducing to not less than 27 inches (686 mm) at a point 8 inches (203.2 mm) back from the front edge.*

1138A.2.1.1 Minimum width. *Knee space shall be 30 inches (762 mm) wide minimum.*

1138A.2.1.2 Maximum depth. *Knee space shall extend 25 inches (635 mm) maximum under an element at 9 inches (229 mm) above the finish floor.*

1138A.2.1.3 Minimum depth. *When knee space is required under an element as part of a clear floor space, the knee space shall be 11 inches (279 mm) deep minimum at 9 inches (229 mm) above the finish floor, and 8 inches (203 mm) deep minimum at 27 inches (686 mm) above the finish floor, measured from the front edge of the element.*

> ***Exceptions:***
> *1. Combined knee and toe space shall extend 19 inches (483 mm) minimum under sinks required to be accessible.*
> *2. Combined knee and toe space shall extend 19 inches (483 mm) minimum under built-in dining and work surfaces required to be accessible.*

1138A.2.1.4 Clearance reduction. *Between 9 inches (229 mm) and 27 inches (686 mm) above the finish floor, the knee space shall be permitted to be reduced at a rate of 1 inch (25 mm) in depth for each 6 inches (152 mm) in height.*

1138A.2.2 Toe space. *Space under an element between the finish floor and 9 inches (229 mm) above the finish floor shall be considered toe space.*

1138A.2.2.1 Minimum width. *Toe space shall be 30 inches (762 mm) wide minimum.*

1138A.2.2.2 Maximum depth. *Toe space shall extend 25 inches (635 mm) maximum under an element.*

1138A.2.2.3 Minimum depth. *When toe space is required under an element as part of a clear floor space, the toe space shall extend 17 inches (432 mm) minimum under the element, measured from the front edge of the element.*

> ***Exceptions:***
> *1. Combined knee and toe space shall extend 19 inches (483 mm) minimum under sinks required to be accessible.*
> *2. Combined knee and toe space shall extend 19 inches (483 mm) minimum under build-in dining and work surfaces required to be accessible.*

1138A.2.2.4 Additional Clearance. *Space extending greater than 6 inches (152 mm) beyond the available knee space at 9 inches (229 mm) above the finish floor shall not be considered toe space.*

1138A.3 Reach ranges.

1138A.3.1 Forward reach.

1. ***Unobstructed.*** *~~If~~ When the clear floor space allows only forward approach to an object, the maximum high forward reach allowed shall be 48 inches (1219 mm) and the minimum low forward reach shall be no less than 15 inches (381 mm) above the finish floor (see Figure. 11A-1I(a)).*
2. ***Obstructed High Reach.*** *When the high forward reach is over an obstruction, the clear floor space shall extend beneath the element for a distance not less than the reach depth over the obstruction.*

The high forward reach shall be 48 inches (1219 mm) maximum when the reach depth is 20 inches (508 mm) maximum. When the reach depth exceeds 20 inches (508 mm), but is not more than 25 inches (635 mm), the high forward reach shall be 44 inches (1118 mm) maximum. (See Figure 11A-1I(b))

1138A.3.2 Side reach.

1. ***Unobstructed.*** *When a clear floor space allows a parallel approach to an element, and the side reach is unobstructed, the high side reach shall be 48 inches (1219 mm) maximum, and the low side reach shall be 15 inches (381 mm) minimum above the finish floor. (See Figure 11A-1J(a) and 11A-1J(b))*

   Exceptions:

   1. An obstruction shall be permitted between the clear floor space and the element when the depth of the obstruction is 10 inches (254 mm) maximum.

   2. Bookshelves shall be permitted to be 54 inches (1372 mm) maximum above the finish floor. Bookshelves may be greater than 54 inches (1372 mm) above the finish floor when an attendant is available to assist persons with disabilities.

2. ***Obstructed high reach.*** *When a clear floor space allows a parallel approach to an element and the high side reach is over an obstruction, the height of the obstruction shall be 34 inches (864 mm) maximum and the depth of the obstruction shall be 24 inches (610 mm) maximum.*

   The high side reach shall be 48 inches (1219 mm) maximum for a reach depth of 10 inches (254 mm) maximum. When the reach depth exceeds 10 inches (254 mm), but no more than 24 inches (610 mm), the high side reach shall be 46 inches (1168 mm) maximum. (See Figure 11A-1J(c)).

   Exception: *The top of washing machines and clothes dryers shall be permitted to be 36 inches (914 mm) maximum above the finish floor.*

1138A.4 Controls and operating mechanisms

Note: *See also Section 1142A, for receptacle, switch and control installation.*

1138A.4.1 General. *Controls and operating mechanisms in accessible spaces, along accessible routes or as part of accessible elements shall comply with this section.*

1138A.4.2 Clear floor space. *Clear floor space complying with Section 1138A.1.4 that allows a forward or parallel approach by a person using a wheelchair shall be provided at all controls and operating mechanisms.*

1138A.4.3 Height. *Controls and operating mechanisms shall be located no higher than 48 inches (1219 mm), and no lower than 15 inches (381 mm), above the finished floor measured to the center of the grip. If the reach is over an obstruction (for example, washer or dryer), controls and operating mechanisms shall be located within the reach ranges specified in Section 1138A.3. Controls and operating mechanisms that do not satisfy these specifications are acceptable, provided that comparable mechanisms, controls or outlets, that perform the same functions, are provided within the same area and are accessible.*

1138A.4.4 Operation. *Controls and operating mechanisms shall be operable with one hand and shall not require tight grasping, pinching or twisting of the wrist. The force required to activate controls and operating mechanisms shall be no greater than 5 pounds (22.2 N).*

NOTE:
Authority Cited: Health and Safety Code Sections 17040, 17050, 17920.9, 17921, 17921.3, 17921.6, 17921.10, 17922, 17922.6, 17922.12, 17927, 17928, 17959.6, 18300, 18552, 18554, 18620, 18630, 18640, 18670, 18690, 18691, 18865, 18871.3, 18871.4, 18873, 18873.1, 18873.2, 18873.3, 18873.4, 18873.5, 18938.3, 18944.11 and 19990; and Government Code Section 12955.1.

Reference: Health and Safety Code Sections 17000 through 17062.5, 17910 through 17995.5, 18200 through 18700, 18860 through 18874, and 19960 through 19997; and Government Code Sections 12955.1 and 12955.1.1.

23. HCD proposes to amend Section 1139A as follows:

SECTION 1139A
ACCESSIBLE DRINKING FOUNTAINS

~~***1139A.1 General.*** *Drinking fountains and water coolers in common use areas and/or sites shall comply with this section. A side approach drinking fountain is not acceptable.*~~

~~***1139A.2 Accessible route.*** *Drinking fountains and water coolers shall be on an accessible route.*~~

~~***1139A.3 Design and construction.*** *Wall-mounted and post-mounted cantilevered drinking fountains and water coolers shall be designed and constructed to comply with the following: (See Figure 11A-11A).*~~

~~*1. A clear floor space shall be provided in conformance with the following:*~~
- ~~*1.1. A minimum clear floor space 30 inches by 48 inches (762 mm by 1219 mm) to allow a person in a wheelchair to approach the unit facing forward.*~~
- ~~*1.2. A clear knee space a minimum of 30 inches (762 mm) in width.*~~
- ~~*1.3. A clear knee space a minimum of 18 inches (457 mm) in depth.*~~
- ~~*1.4. A clear and unobstructed knee space under the drinking fountain not less than 27 inches (686 mm) in height and 8 inches (203.2 mm) in depth, the depth measurements being taken from the front edge of the fountain.*~~
- ~~*1.5. A toe clearance of 9 inches (228.6 mm) in height above the floor and 17 inches (432 mm) in depth from the front edge of the fountain.*~~

~~*2. Water flow shall be provided in conformance with the following:*~~
- ~~*2.1. The spout shall be shall be located within 6 inches (152.4 mm) of the front edge of the drinking fountain and within 36 inches (914 mm) of the floor.*~~
- ~~*2.2. A flow of water at least 4 inches (101.6 mm) high shall be available to allow the insertion of a cup or glass under the flow of water.*~~
- ~~*2.3. The water stream from the bubbler shall be substantially parallel to the front edge of the drinking fountain.*~~
- ~~*2.4. The force required to activate controls shall be no greater than 5 pound-force (22.2 N).*~~
- ~~*2.5. Manually operated or electronically operated controls shall be located within 6 inches (152.4 mm) of the front edge of the fountain.*~~

~~***1139A.3.1 Location.*** *Water fountains shall be located completely within alcoves or otherwise positioned so as not to encroach into pedestrian ways. The alcove in which the water fountain is located shall not be less than 32 inches (813 mm) in width and 18 inches (457 mm) in depth. Protruding objects located in alcoves or otherwise positioned so as to limit encroachment into pedestrian ways are permitted to project 4 inches (102 mm) into walks, halls, corridors, passageways or aisles. (See Figure 11A-11A).*~~

~~***Exception:*** *When the enforcing agency determines that it would create an unreasonable hardship to locate the water fountain in an alcove, the water fountain may project into the path of travel, and the path of travel shall be identifiable to the blind as follows:*~~
1. ~~*The surface of the path of travel at the water fountain shall be textured so that it is clearly identifiable by a blind person using a cane. The minimum textured area shall extend from the wall supporting the water fountain to 1 foot (305 mm) beyond the front edge of the water fountain and shall extend 1 foot (305 mm) beyond each side of the water fountain, or*~~
2. ~~*Wing walls shall be provided on each side of the water fountain. The wing walls shall project out from the supporting wall at least as far as the water fountain to within 6 inches (152.4 mm) of the surface of the path of travel. There shall also be a minimum of 32 inches (813 mm) clear between the wing walls.*~~

1139A.1 General. *Drinking fountains and water coolers in common use areas and/or sites shall comply with this section. A side approach drinking fountain is not acceptable. (See Figure 11A-11A).*

1139A.2 Accessible route. *Drinking fountains and water coolers shall be on an accessible route.*

1139A.3 Depth. *Drinking fountains shall be a minimum of 18 inches (457 mm) and a maximum of 19 inches (483 mm) in depth.*

1139A.4 Clear floor space. *Drinking fountains shall be provided with 30 inches by 48 inches (762 mm by 1219 mm) clear floor space, centered on the unit. The clear floor space shall be positioned for a forward approach.*

1139A.4.1 Knee and toe space. *Drinking fountains shall be provided with a clear and unobstructed knee and toe space. Knee and toe space shall comply with Section 1138A.2.*

1139A.5 Spout location. *The spout shall be located 15 inches (381 mm) minimum from the vertical support and 5 inches (127 mm) maximum from the front edge of the drinking fountain, including bumpers. Spout outlets shall be 36 inches (914 mm) maximum above the finish floor.*

1139A.6 Water flow. *The spout shall provide a flow of water at least 4 inches (101.6 mm) high to allow the insertion of a cup or glass under the flow of water. The angle of the water stream shall be measured horizontally relative to the front face of the unit. When spouts are located less than 3 inches (76 mm) from the front of the unit, the angle of the water stream shall be 30 degrees maximum. When spouts are located between 3 inches (76 mm) and 5 inches (127 mm) maximum from the front of the unit, the angle of the water stream shall be 15 degrees maximum.*

1139A.7 Controls and operating mechanisms. *The flow of water shall be activated by manually or electronically operated controls. The manually operated controls shall be front mounted or side mounted, located within 6 inches (152 mm) of the front edge of the fountain. The force required to activate controls shall be no greater than 5 pounds (22.2 N).*

1139A.8 Location. *Drinking fountains shall be located completely within alcoves, between wing walls or otherwise positioned so as not to encroach into pedestrian ways. The alcove or otherwise protected area in which the drinking fountain is located shall not be less than 32 inches (813 mm) in width and 18 inches (457 mm) in depth. When the depth of the protected area where the drinking fountain is located exceeds 24 inches (610 mm), additional maneuvering clearance shall be provided in accordance with Section 1138A.1.4.2 and Figure 11A-1H.*

When provided, wing walls shall project out from the supporting wall at least as far as the drinking fountain to within 6 inches (152.4 mm) vertically from the finish floor.

Protruding objects located in alcoves or otherwise positioned so as to limit encroachment into pedestrian ways are permitted to project 4 inches (101.6 mm) into walks, halls, corridors, passageways or aisles. (See Figure 11A-11A).

NOTE:
Authority Cited: Health and Safety Code Sections 17040, 17050, 17920.9, 17921, 17921.3, 17921.6, 17921.10, 17922, 17922.6, 17922.12, 17927, 17928, 17959.6, 18300, 18552, 18554, 18620, 18630, 18640, 18670, 18690, 18691, 18865, 18871.3, 18871.4, 18873, 18873.1, 18873.2, 18873.3, 18873.4, 18873.5, 18938.3, 18944.11 and 19990; and Government Code Section 12955.1.

Reference: Health and Safety Code Sections 17000 through 17062.5, 17910 through 17995.5, 18200 through 18700, 18860 through 18874, and 19960 through 19997; and Government Code Sections 12955.1 and 12955.1.1.

---

24. HCD proposes to amend Section 1142A as follows:

SECTION 1142A
ELECTRICAL RECEPTACLE,
SWITCH AND CONTROL HEIGHTS

1142A.1 Receptacle heights. *Electrical receptacle outlets on branch circuits of 30 amperes or less and communication system receptacles shall be located no more than 48 inches (1219 mm) measured from the top of the receptacle outlet box ~~or receptacle housing~~ nor less than 15 inches (381 mm) measured from the bottom of the receptacle outlet box ~~or receptacle housing~~ to the level of the finished floor or working platform. If the reach is over a physical barrier or an obstruction (for example, a kitchen base cabinet), ~~between 20 and 25 inches (508 and 635 mm) in depth, the maximum height measured at the box is reduced to 44 inches (1118 mm) for forward approach, or 46 inches (1168 mm) for side approach, provided the obstruction is no more than 24 inches (610 mm) in depth~~ receptacles shall be located within the reach ranges specified in Section 1138A.3. Physical barriers and ~~O~~obstructions shall not extend more than 25 inches (635 mm) from the wall beneath the receptacle. Receptacle ~~O~~outlets that do not satisfy these specifications are acceptable provided that comparable receptacle outlets, that perform the same functions, are provided within the same area and are accessible.*

Exceptions:
1. Receptacle outlets installed as part of permanently installed baseboard heaters are exempt.
2. Required receptacle outlets shall be permitted in floors when adjacent to sliding panels or walls.

3. Baseboard electrical outlets used in relocatable partitions, window walls or other electrical convenience floor outlets are not subject to the minimum height requirements.
4. This section shall not apply to existing buildings when the enforcing agency determines that compliance with these standards would create an unreasonable hardship.

~~***Note:*** *The intent of the measurement is to ensure that receptacles fall within the reach range of 15 inches to 48 inches (381 mm to 1219 mm).*~~

1142A.2 Switch and control heights. *Controls or switches intended to be used by the occupant of the room or area to control lighting and receptacle outlets, appliances, alarms or cooling, heating and ventilating equipment shall be located no more than 48 inches (1219 mm) measured from the top of the outlet box nor less than 15 inches (381 mm) measured from the bottom of the outlet box to the level of the finished floor or working platform. If the reach is over a physical barrier or an obstruction (for example, a kitchen base cabinet)* ~~*between 20 and 25 inches (508 and 635 mm) in depth, the maximum height is reduced to 44 inches (1118 mm) for forward approach, or 46 inches (1168 mm) for side approach, provided the obstruction is no more than 24 inches (610 mm) in depth*~~ *switches and controls shall be located within the reach ranges specified in Section 1138A.3. Physical barriers or obstructions shall not extend more than 25 inches (635 mm) from the wall beneath a switch or control.*

Switches and ~~*C*~~*controls that do not satisfy these specifications are acceptable provided that comparable controls or outlets, that perform the same functions, are provided within the same area and are accessible.*

NOTE:
Authority Cited: Health and Safety Code Sections 17040, 17050, 17920.9, 17921, 17921.3, 17921.6, 17921.10, 17922, 17922.6, 17922.12, 17927, 17928, 17959.6, 18300, 18552, 18554, 18620, 18630, 18640, 18670, 18690, 18691, 18865, 18871.3, 18871.4, 18873, 18873.1, 18873.2, 18873.3, 18873.4, 18873.5, 18938.3, 18944.11 and 19990; and Government Code Section 12955.1.

Reference: Health and Safety Code Sections 17000 through 17062.5, 17910 through 17995.5, 18200 through 18700, 18860 through 18874, and 19960 through 19997; and Government Code Sections 12955.1 and 12955.1.1.

---

25. HCD proposes to amend Section 1143A as follows:

SECTION 1143A
SIGNAGE

~~***1143A.1. General.*** *When signs and/or identification devices are provided they shall comply with this section.*~~

~~***Exception:*** *Signs need not be provided within dwelling units.*~~

~~***1143A.2. Identification signs.*** *When signs identify permanent rooms and spaces of a building or site, they shall comply with 1143A.5, 1143A.6, 1143A.8, 1143A.9 and 1143A.10.*~~

~~***Note:*** *See Section 1124A for additional signage requirements applicable to elevators and Section 1127A.7 for sanitary facilities.*~~

~~***1143A.3. Directional and informational signs.*** *When signs direct to or give information about permanent rooms and spaces of a building or site, they shall comply with 1143A.5, 1143A.6 and 1143A.7.*~~

~~***1143A.4. Accessibility signs.*** *When signs identify, direct or give information about accessible elements and features of a building or site, they shall include the appropriate symbol of accessibility and shall comply with 1143A.5 and, when applicable, Section 1143A.10.*~~

~~***1143A.5 Finish and contrast.*** *Characters, symbols and their background shall have a non-glare finish. Characters and symbols shall contrast with their background, either light on a dark background or dark on a light background.*~~

~~***1143A.6 Proportions.*** *Characters on signs shall have a width to height ratio of between 3:5 and 1:1 and a stroke width to height ratio of between 1:5 and 1:10.*~~

~~***1143A.7 Character height.*** *Characters and numbers on signs shall be sized according to the viewing distance from which they are to be read. The minimum height is measured using an uppercase "X". Lowercase characters are permitted. For signs suspended or projected above the finish floor greater than 80 inches (2032 mm), the minimum character height shall be 3 inches (76 mm).*~~

~~***1143A.8 Raised characters and pictorial symbol signs.*** *When raised characters are required or when pictorial symbols (pictograms) are used on such signs, they shall conform to the following requirements:*~~

1. ~~***Character type.*** *Characters on signs shall be raised 1/32 inch (0.794 mm) minimum and shall be sans serif uppercase characters accompanied by Grade 2 Braille complying with Section 1143A.9.*~~
2. ~~***Character size.*** *Raised characters shall be a minimum of 5/8 inch (15.9 mm) and a maximum of 2 inches (51 mm) high.*~~
3. ~~***Pictorial symbol signs (pictograms).*** *Pictorial symbol signs (pictograms) shall be accompanied by the verbal description placed directly below the pictogram. The outside dimension of the pictogram field shall be a minimum of 6 inches (152 mm) in height.*~~
4. ~~***Character placement.*** *Characters and Braille shall be in a horizontal format. Braille shall be placed a minimum of 3/8 inch (9.5 mm) and a maximum of ½ inch (12.7 mm) directly below the tactile characters, flush left or centered. When tactile text is multilined, all Braille shall be placed together below all lines of tactile text.*~~

~~***1143A.9 Braille.*** *Contracted Grade 2 Braille shall be used wherever Braille is required in other portions of these standards. Dots shall be 1/10 inch (2.54 mm) on center in each cell with 2/10 inch (5.08 mm) space between cells, measured from the second column of dots in the first cell to the first column of dots in the second cell. Dots shall be raised a minimum of 1/40 inch (0.635 mm) above the background. Braille dots shall be domed or rounded.*~~

~~***1143A.10 Mounting location and height.*** *Where permanent identification signs are provided for rooms and spaces, signs shall be installed on the wall adjacent to the latch side of the door. Where there is no wall space on the latch side, including at double leaf doors, signs shall be placed on the nearest adjacent wall, preferably on the right.*~~

~~*Where permanent identification signage is provided for rooms and spaces, it shall be located on the approach side of the door as one enters the room or space. Signs that identify exits shall be located on the same side of the door as the visual exit sign.*~~
~~*Mounting height shall be 60 inches (1524 mm) above the finish floor to the centerline of the sign. Mounting location shall be determined so that a person may approach within 3 inches (76 mm) of signage without encountering protruding objects or standing within the swing of a door.*~~

~~***Note:*** *See also Section 1127A.7 for additional signage requirements applicable to sanitary facilities.*~~

1143A.1 General. *When signs and/or identification devices are provided they shall comply with this section. When both visual and tactile characters are required, either one sign with both visual and tactile characters, or two separate signs - one with visual, and one with tactile characters, shall be provided.*

> ***Exception:*** *Signs need not be provided within dwelling units.*

Note: *See Section 1127A.7 for additional signage requirements applicable to sanitary facilities, and Section 1124A for additional signage requirements applicable to elevators.*

1143A.2 Identification signs. *When signs identify permanent rooms and spaces of a building or site, they shall comply with Sections 1143A.1, 1143A.5, 1143A.6, and 1143A.7.*

> ***Exception:*** *Exterior signs that are not located at the door to the space they serve shall not be required to comply with Section 1143A.6.*

1143A.3 Directional and informational signs. *When signs direct to or give information about permanent rooms and spaces of a building or site, they shall comply with Section 1143A.5.*

1143A.4 Accessibility signs. *When signs identify, direct or give information about accessible elements and features of a building or site, they shall include the appropriate symbol of accessibility and shall comply with Section 1143A.5.*

***1143A.5 Visual characters**. Signs with visual characters shall comply with this section.*

*1. **Finish and contrast.** Characters and their background shall have a non-glare finish. Characters shall contrast with their background, either light on a dark background or dark on a light background.*

*2. **Character type.** Characters shall be uppercase, lowercase or a combination of both. Characters shall be conventional in form, and shall not be italic, oblique, script, highly decorative, or of other unusual forms.*

*3. **Proportions.** Characters on signs shall be selected from fonts where the width of the uppercase letter "O" is 60 percent minimum and 110 percent maximum of the height of the uppercase letter "I".*

*4. **Character height.** Visual characters shall be sized in accordance with Table 1143A.5. Viewing distance shall be measured as the horizontal distance between the character and an obstruction preventing further approach towards the sign. Character height shall be based on the uppercase letter "I".*

TABLE 1143A.5
VISUAL CHARACTER HEIGHT

HEIGHT TO FINISH FLOOR FROM BASELINE OF CHARACTER	HORIZONTAL VIEWING DISTANCE	MINIMUM CHARACTER HEIGHT
40 inches (1016 mm) to less than or equal to 70 inches (1778 mm)	Less than 72 inches (1829 mm)	5/8 inch (15.9 mm)
	72 inches (1829 mm) and greater	5/8 inch (15.9 mm), plus 1/8 inch (3.2 mm) per foot (305 mm) of viewing distance above 72 inches (1829 mm)
Greater than 70 inches (1778 mm) to less than or equal to 120 inches (3048 mm)	Less than 180 inches (4572 mm)	2 inches (51 mm)
	180 inches (4572 mm) and greater	2 inches (51 mm), plus 1/8 inch (3.2 mm) per foot (305 mm) of viewing distance above 180 inches (4572 mm)
Greater than 120 inches (3048 mm)	Less than 21 feet (6401 mm)	3 inches (76 mm)
	21 feet (6401 mm) and greater	3 inches (76 mm), plus 1/8 inch (3.2 mm) per foot (305 mm) of viewing distance above 21 feet (6401 mm).

*5. **Height from finish floor.** Visual characters shall be 40 inches (1016 mm) minimum above the finish floor.*

Exceptions:
1. Visual characters indicating elevator car controls.
2. Floor-level exit signs complying with Chapter 10, Section 1011.6.

*6. **Stroke thickness.** Stroke thickness of the uppercase letter "I" shall be 10 percent minimum and 20 percent maximum of the height of the character.*

*7. **Character spacing.** Character spacing shall be measured between the two closest points of adjacent characters, excluding word spaces. Spacing between individual characters shall be 10 percent minimum and 35 percent maximum of character height.*

*8. **Line spacing.** Spacing between the baselines of separate lines of characters within a message shall be 135 percent minimum and 170 percent maximum of the character height.*

*9. **Character format.** Text shall be in a horizontal format.*

1143A.6 Raised characters and pictorial symbol signs. *When raised characters are required or when pictorial symbols (pictograms) are used on such signs, they shall comply with this section. Raised characters and pictorial symbols shall be duplicated in braille complying with Section 1143A.7.*

1. ***Character type.*** Raised characters on signs shall be 1/32 inch (0.8 mm) minimum above their background. Characters shall be sans serif uppercase, and shall not be italic, oblique, script, highly decorative, or of other unusual forms.

2. ***Character height.*** *Character height measured vertically from the baseline of the character shall be 5/8 inch (15.9 mm) minimum and 2 inches (51 mm) maximum based on the height of the uppercase letter "I".*

3. ***Character format.*** *Characters and Braille shall be in a horizontal format.*

4. ***Proportions.*** *Raised characters on signs shall be selected from fonts when the width of the uppercase letter "O" is 60 percent minimum and 110 percent maximum of the height of the uppercase letter "I".*

5. ***Stroke thickness.*** *Stroke thickness of the uppercase letter "I" shall be 15 percent maximum of the height of the character.*

6. ***Character Spacing.*** *Character spacing shall be measured between the two closest points of adjacent raised characters within a message, excluding word spaces. When characters have rectangular cross sections, spacing between individual raised characters shall be 1/8 inch (3.2 mm) minimum and 4 times the raised character stroke width maximum. When characters have other cross sections, spacing between individual raised characters shall be 1/16 inch (1.6 mm) minimum and 4 times the raised character stroke width maximum at the base of the cross sections, and 1/8 inch (3.2 mm) minimum and 4 times the raised character stroke width maximum at the top of the cross sections. Characters shall be separated from raised borders and decorative elements 3/8 inch (9.5 mm) minimum.*

7. ***Line Spacing.*** *Spacing between the baselines of separate lines of raised characters within a message shall be 135 percent minimum and 170 percent maximum of the raised character height.*

8. ***Location.*** *When a tactile sign is provided at a door, the sign shall be located alongside the door at the latch side. When a tactile sign is provided at double doors with one active leaf, the sign shall be located on the inactive leaf. When a tactile sign is provided at double doors with two active leafs, the sign shall be located to the right of the right hand door. When there is no wall space at the latch side of a single door or at the right side of double doors, signs shall be located on the nearest adjacent wall. Signs containing tactile characters shall be located so that a clear floor space of 18 inches (457 mm) minimum by 18 inches (457 mm) minimum, centered on the tactile characters, is provided beyond the arc of any door swing between the closed position and 45 degree open position. When permanent identification signage is provided for rooms and spaces they shall be located on the approach side of the door as one enters the room or space. Signs that identify exits shall be located on the approach side of the door as one exits the room or space.*

> ***Exception:*** *Signs with raised characters shall be permitted on the push side of doors with closers and without hold-open devices. This exception does not apply to double-acting (swinging) doors.*

9. ***Height.*** *Signs with raised characters shall be located 48 inches (1219 mm) minimum above the finish floor, measured from the baseline of the lowest Braille cells and 60 inches (1524 mm) maximum above the finish floor, measured from the baseline of the highest line of raised characters.*

> ***Exception:*** *Tactile characters for elevator car controls shall not be required to comply with this section.*

10. ***Pictorial symbol signs (pictograms).*** *Pictorial symbol signs (pictograms) shall be accompanied by a text description located directly below the pictogram field. The text description shall comply with Sections 1143A.6 and 143A.7. The outside dimension of the pictogram field shall be a minimum of 6 inches (152 mm) in height. Characters and braille shall not be located in the pictogram field.*

1143A.7 Braille. *Contracted Grade 2 Braille shall be used wherever Braille is required in other portions of these standards.*

1143A.7.1 Dimensions and capitalization. *Braille dots shall have a domed or rounded shape and shall comply with Table 1143A.7.1. The indication of an uppercase letter or letters shall only be used before the first word of sentences, proper nouns and names, individual letters of the alphabet, initials, and acronyms.*

1143A.7.2 Position. *Braille shall be positioned below the corresponding text in a horizontal format, flush left or centered. If text is multi-lined, braille shall be placed below the entire text. Braille shall be separated 3/8 inch (9.5 mm) minimum and 1/2 inch (12.7 mm) maximum from any other tactile characters and 3/8 inch (9.5 mm) minimum from raised borders and decorative elements.*

Exception: *Braille provided on elevator car controls shall be separated 3/16 inch (4.8 mm) minimum and shall be located either directly below or adjacent to the corresponding raised characters or symbols.*

TABLE 1143A.7.1 BRAILLE DIMENSIONS

Measurement Range	***Minimum in Inches Maximum in Inches***
Dot base diameter	*0.059 (1.5 mm) to 0.063 (1.6 mm)*
Distance between two dots in the same cell[1]	*0.090 (2.3 mm) to 0.100 (2.5 mm)*
Distance between corresponding dots in adjacent cells[1]	*0.290 (7.4 mm) to 0.300 (7.6 mm)*
Dot height	*0.025 (0.6 mm) to 0.037 (0.9 mm)*
Distance between corresponding dots from one cell directly below[1]	*0.395 (10 mm) to 0.400 (10.2 mm)*
[1] *Measured center to center.*	

1143A.8 Symbols of accessibility. *Symbols of accessibility and their background shall have a non-glare finish. Symbols of accessibility shall contrast with their background with either a light symbol on a dark background or a dark symbol on a light background. Symbols of accessibility shall comply with the following:*

1. ***International Symbol of Accessibility.*** *The International Symbol of Accessibility shall consist of a white figure on a blue background. The blue shall be Color No. 15090 in Federal Standard 595B. (See Figure 11A-1A)*

2. ***International Symbol of TTY. (****See Figure 11A-11C)*

3. ***Volume Control Telephones.*** *(See Figure 11A-11D)*

4. ***Assistive Listening Systems.*** *(See Figure 11A-11E)*

5. ***Cleaner Air Symbol.*** *See Chapter 11B*

6. ***Toilet and Bathing Facilities Geometric Symbols.*** *See Section 1127A.7*

NOTE:
Authority Cited: Health and Safety Code Sections 17040, 17050, 17920.9, 17921, 17921.3, 17921.6, 17921.10, 17922, 17922.6, 17922.12, 17927, 17928, 17959.6, 18300, 18552, 18554, 18620, 18630, 18640, 18670, 18690, 18691, 18865, 18871.3, 18871.4, 18873, 18873.1, 18873.2, 18873.3, 18873.4, 18873.5, 18938.3, 18944.11 and 19990; and Government Code Section 12955.1.

Reference: Health and Safety Code Sections 17000 through 17062.5, 17910 through 17995.5, 18200 through 18700, 18860 through 18874, and 19960 through 19997; and Government Code Sections 12955.1 and 12955.1.1.

26. HCD proposes to amend Division VII – FIGURES as follows:

Division VII – FIGURES

Diagrams illustrate the specific requirements of these regulations and are intended only as an aid for building design and construction.

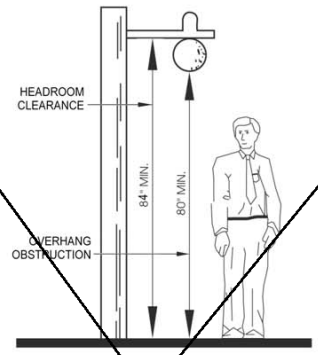

THIS DIAGRAM ILLUSTRATES THE SPECIFIC REQUIREMENTS OF THESE REGULATIONS AND IS INTENDED ONLY AS AN AID FOR BUILDING DESIGN AND CONSTRUCTION.

FIGURE 11A-1B—OVERHANGING OBSTRUCTION

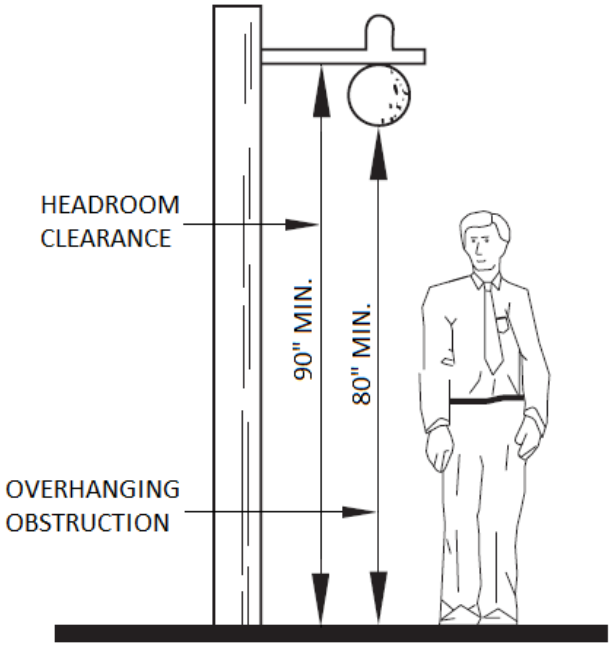

FIGURE 11A-1B
HEADROOM CLEARANCE AND OVERHANGING OBSTRUCTION

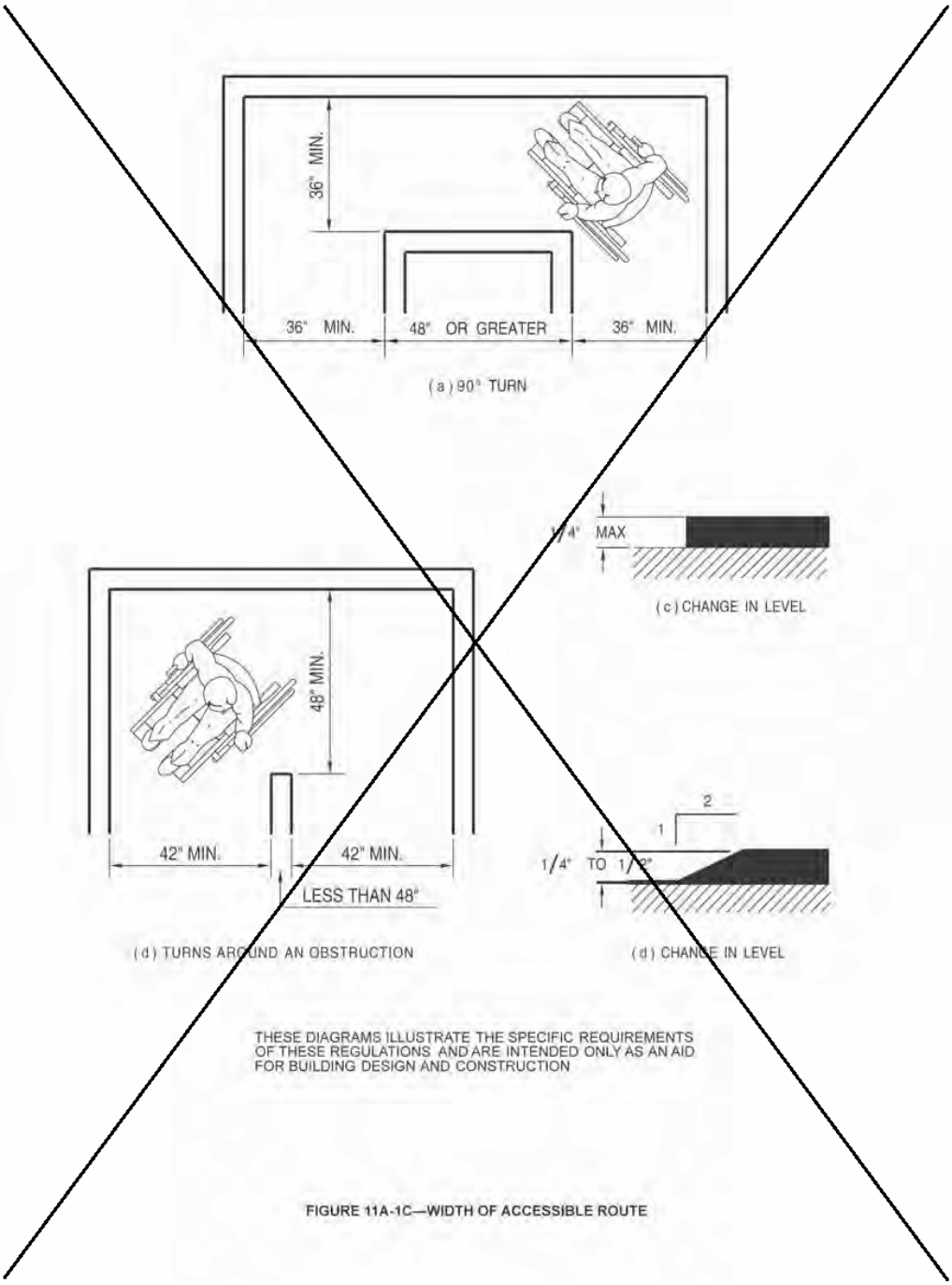

FIGURE 11A-1C—WIDTH OF ACCESSIBLE ROUTE

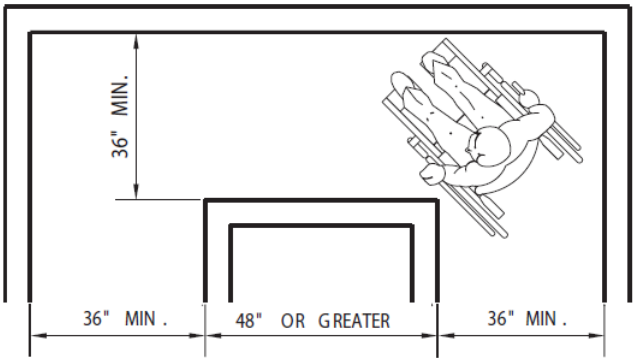

(a) 90° TURN AROUND OBSTRUCTION

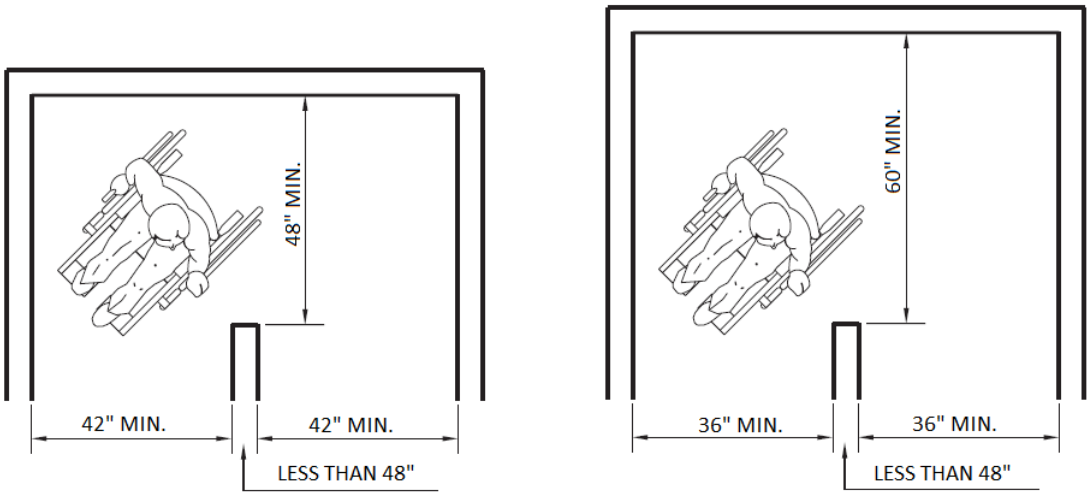

(b) 180° TURN AROUND OBSTRUCTION

FIGURE 11A-1C
WIDTH OF ACCESSIBLE ROUTE AT TURNS

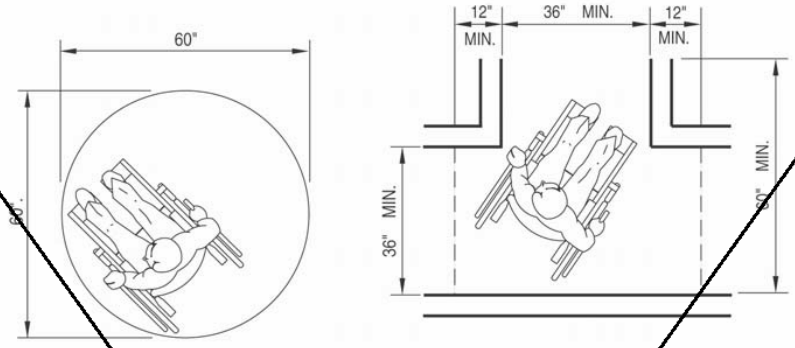

(a) 60 INCHES DIAMETER SPACE

(b) T–SHAPED SPACE FOR 180° TURNS

THESE DIAGRAMS ILLUSTRATE THE SPECIFIC REQUIREMENTS OF THESE REGULATIONS AND ARE INTENDED ONLY AS AN AID FOR BUILDING DESIGN AND CONSTRUCTION.

FIGURE 11A-1D—WHEELCHAIR TURNING SPACE

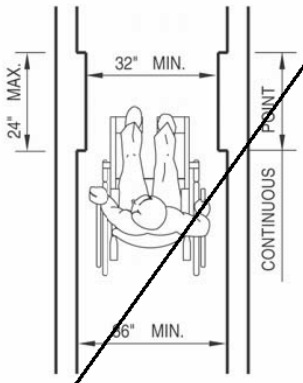

FIGURE 11A-1E—MINIMUM CLEAR WIDTH FOR SINGLE WHEELCHAIR

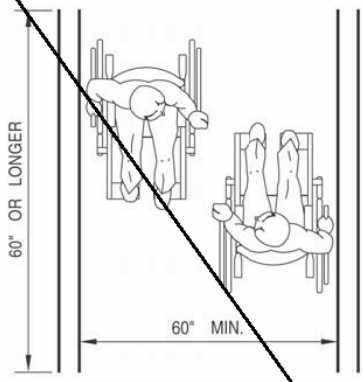

FIGURE 11A-1F—MINIMUM CLEAR WIDTH FOR TWO WHEELCHAIRS

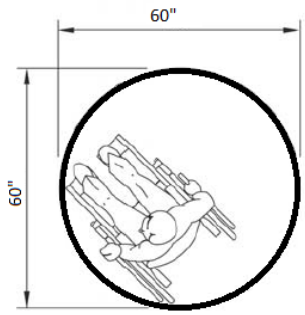

(a) 60 INCHES DIAMETER SPACE

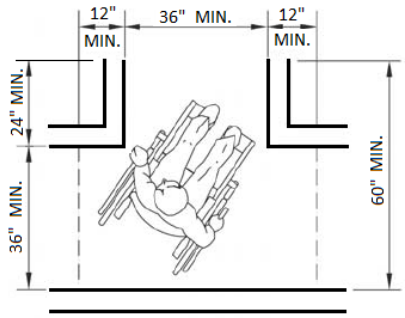

(b) T-SHAPED SPACE FOR 180 º TURN

FIGURE 11A-1D
WHEELCHAIR TURNING SPACE

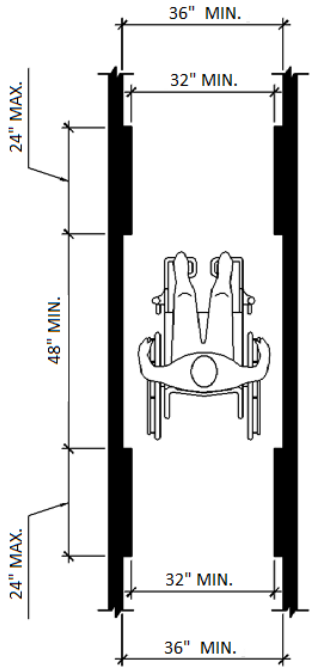

MINIMUM CLEAR WIDTH FOR SINGLE WHEELCHAIR

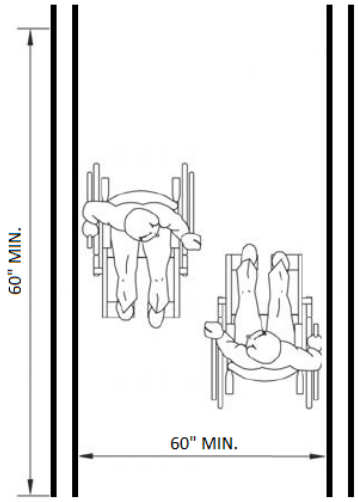

MINIMUM CLEAR WIDTH FOR TWO WHEELCHAIRS

FIGURE 11A-1E
WHEELCHAIR PASSAGE WIDTH

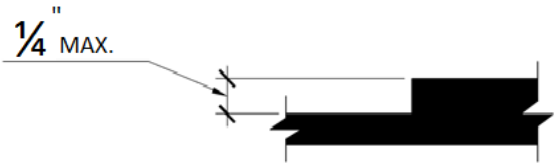

(a) VERTICAL CHANGE IN LEVEL

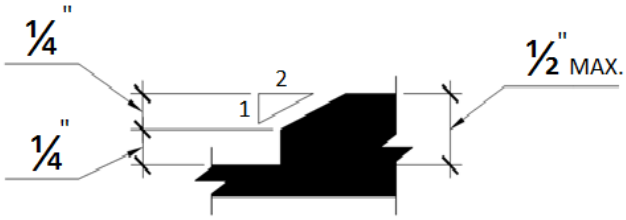

(b) BEVELED CHANGE IN LEVEL

FIGURE 11A-1F
CHANGE IN LEVEL

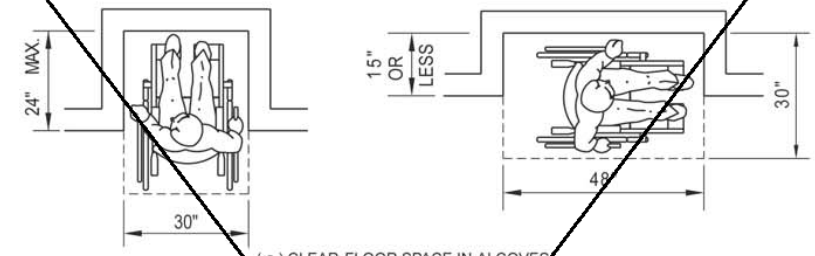

(a) CLEAR FLOOR SPACE IN ALCOVES

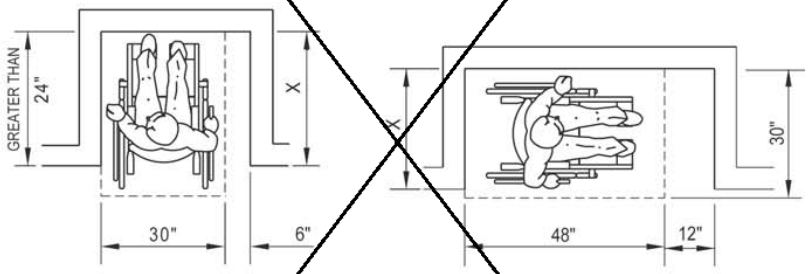

NOTE : IF X > 24 INCHES, THEN AN ADDITIONAL MANEUVERING CLEARANCE OF 6 INCHES SHALL BE PROVIDED AS SHOWN.

NOTE : IF X > 15 INCHES, THEN AN ADDITIONAL MANEUVERING CLEARANCE OF 12 INCHES SHALL BE PROVIDED AS SHOWN.

(b) ADDITIONAL MANEUVERING CLEARANCE FOR ALCOVES

THESE DIAGRAMS ILLUSTRATE THE SPECIFIC REQUIREMENTS OF THESE REGULATIONS AND ARE INTENDED ONLY AS AN AID FOR BUILDING DESIGN AND CONSTRUCTION

FIGURE 11A-1H—MINIMUM CLEAR FLOOR SPACE FOR WHEELCHAIRS

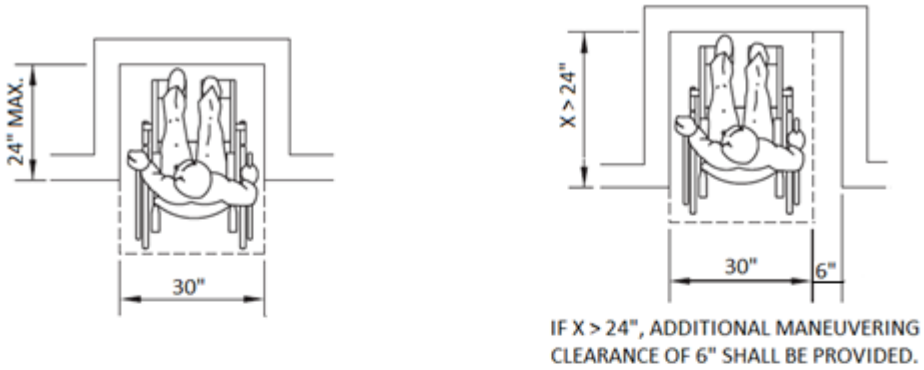

(a) FORWARD APPROACH

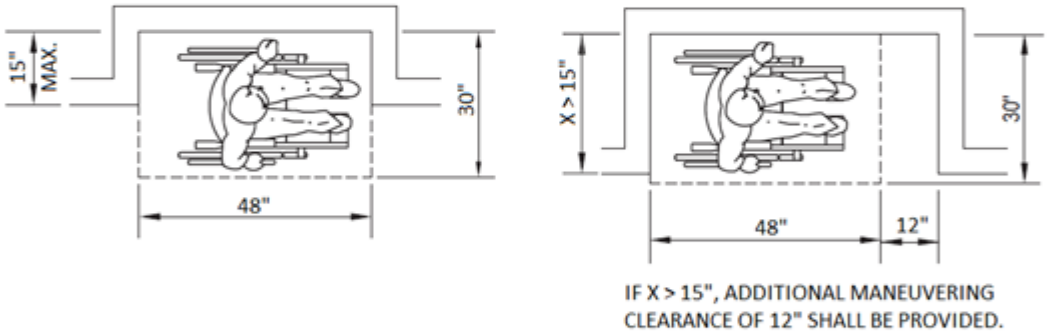

(b) PARALLEL APPROACH

FIGURE 11A-1H

MINIMUM CLEAR FLOOR SPACE IN ALCOVES

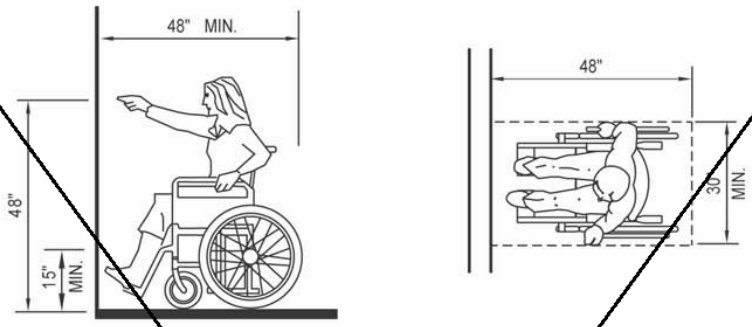

(a) HIGH FORWARD REACH LIMIT

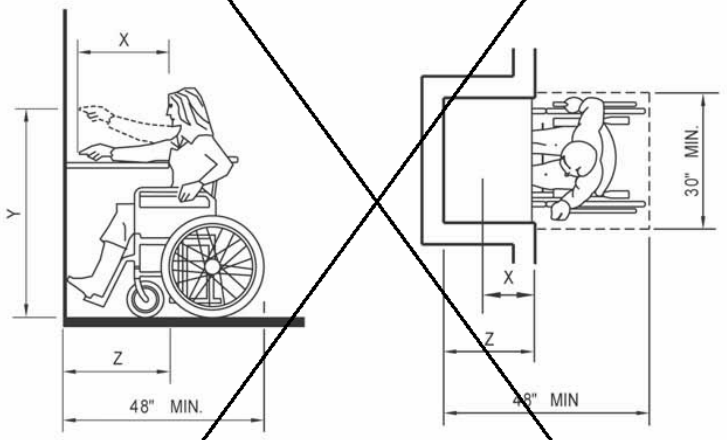

NOTE :
X SHALL BE LESS THAN OR EQUAL TO 25 INCHES Z SHALL BE GREATER THAN OR EQUAL TO X. WHEN X IS LESS THAN 20 INCHES, THEN Y SHALL BE 48 INCHES MAXIMUM. WHEN X IS 20 TO 25 INCHES, THEN Y SHALL BE 44 INCHES MAXIMUM.

(b) MAXIMUM FORWARD REACH OVER AN OBSTRUCTION

THESE DIAGRAMS ILLUSTRATE THE SPECIFIC REQUIREMENTS OF THESE REGULATIONS AND ARE INTENDED ONLY AS AN AID FOR BUILDING DESIGN AND CONSTRUCTION

FIGURE 11A-1I—FORWARD REACH

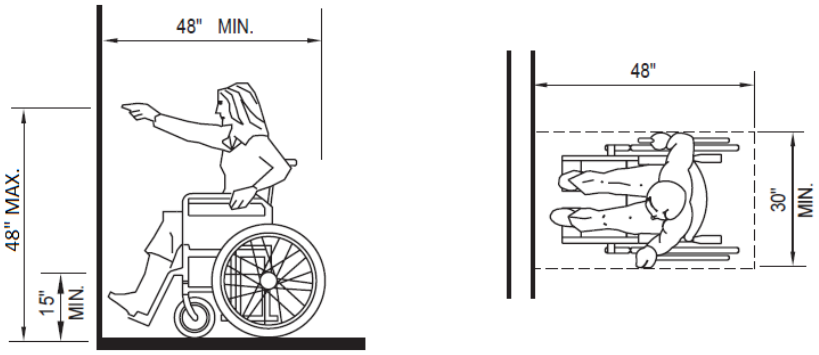

(a) UNOBSTRUCTED FORWARD REACH

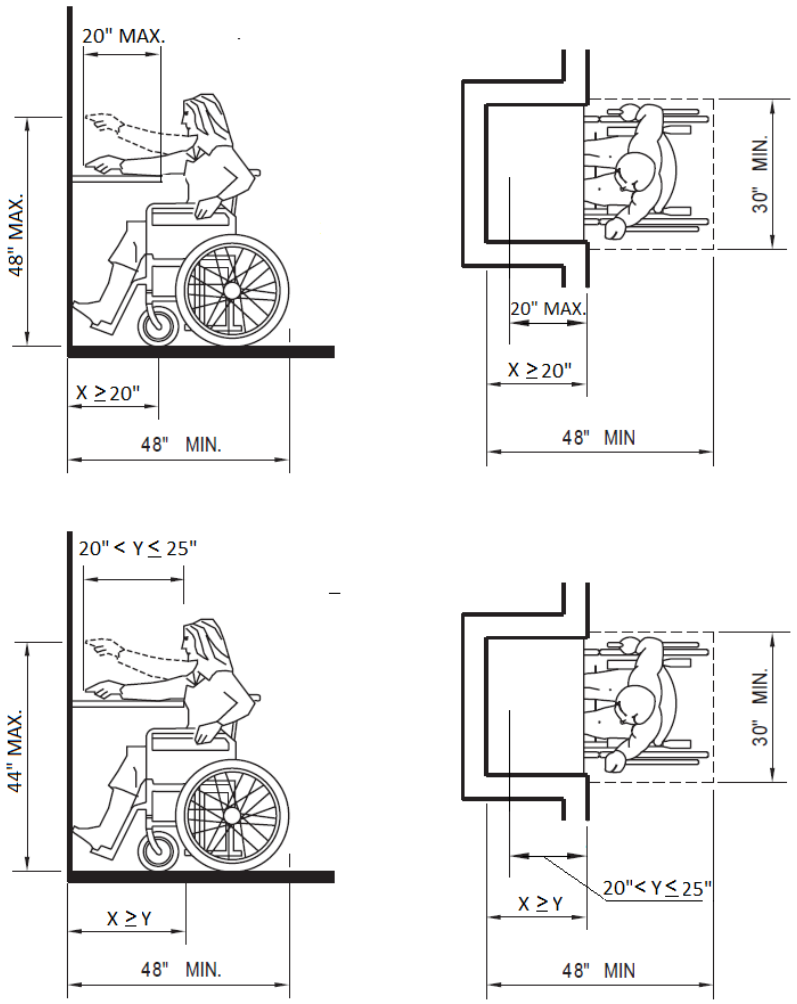

(b) FORWARD REACH OVER OBSTRUCTION

FIGURE 11A-1I
FORWARD REACH

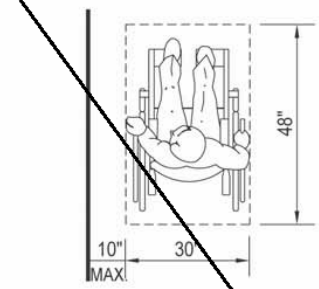

(a) CLEAR FLOOR SPACE PARALLEL APPROACH

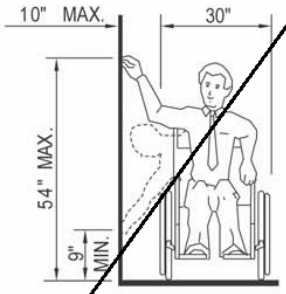

(b) HIGH AND LOW SIDE REACH LIMITS

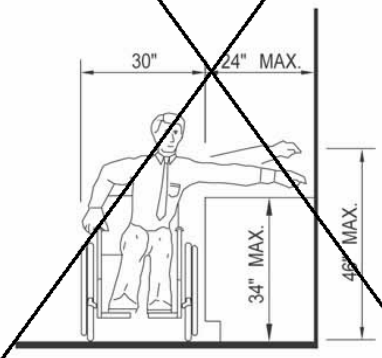

(c) MAXIMUM SIDE REACH OVER OBSTRUCTION

THESE DIAGRAMS ILLUSTRATE THE SPECIFIC REQUIREMENTS OF THESE REGULATIONS AND ARE INTENDED ONLY AS AN AID FOR BUILDING DESIGN AND CONSTRUCTION

FIGURE 11A-1J—SIDE REACH

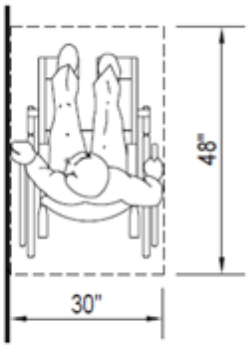

CLEAR FLOOR SPACE FOR PARALLEL APPROACH

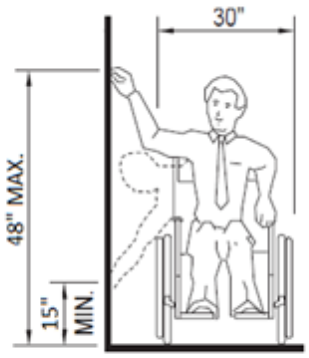

HIGH AND LOW SIDE REACH LIMITS

(a) UNOBSTRUCTED SIDE REACH

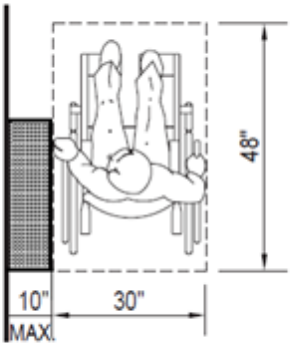

CLEAR FLOOR SPACE FOR PARALLEL APPROACH

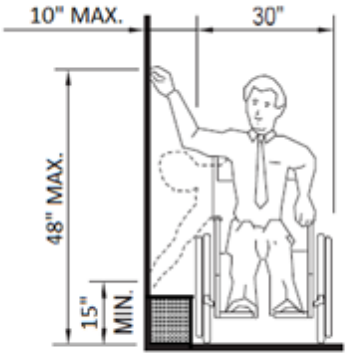

HIGH AND LOW SIDE REACH LIMITS

(b) SIDE REACH OVER OBSTRUCTION 10" MAXIMUM

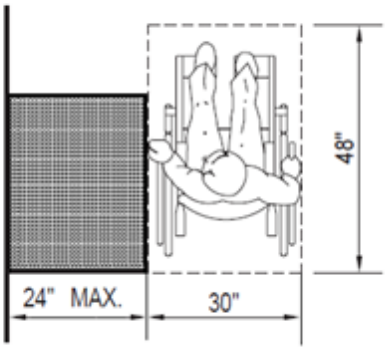

CLEAR FLOOR SPACE FOR PARALLEL APPROACH

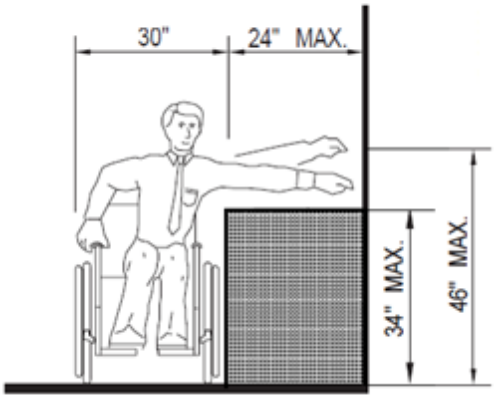

MAXIMUM SIDE REACH OVER OBSTRUCTION

(c) SIDE REACH OVER OBSTRUCTION >10" AND 24" MAXIMUM

FIGURE 11A-1J
SIDE REACH

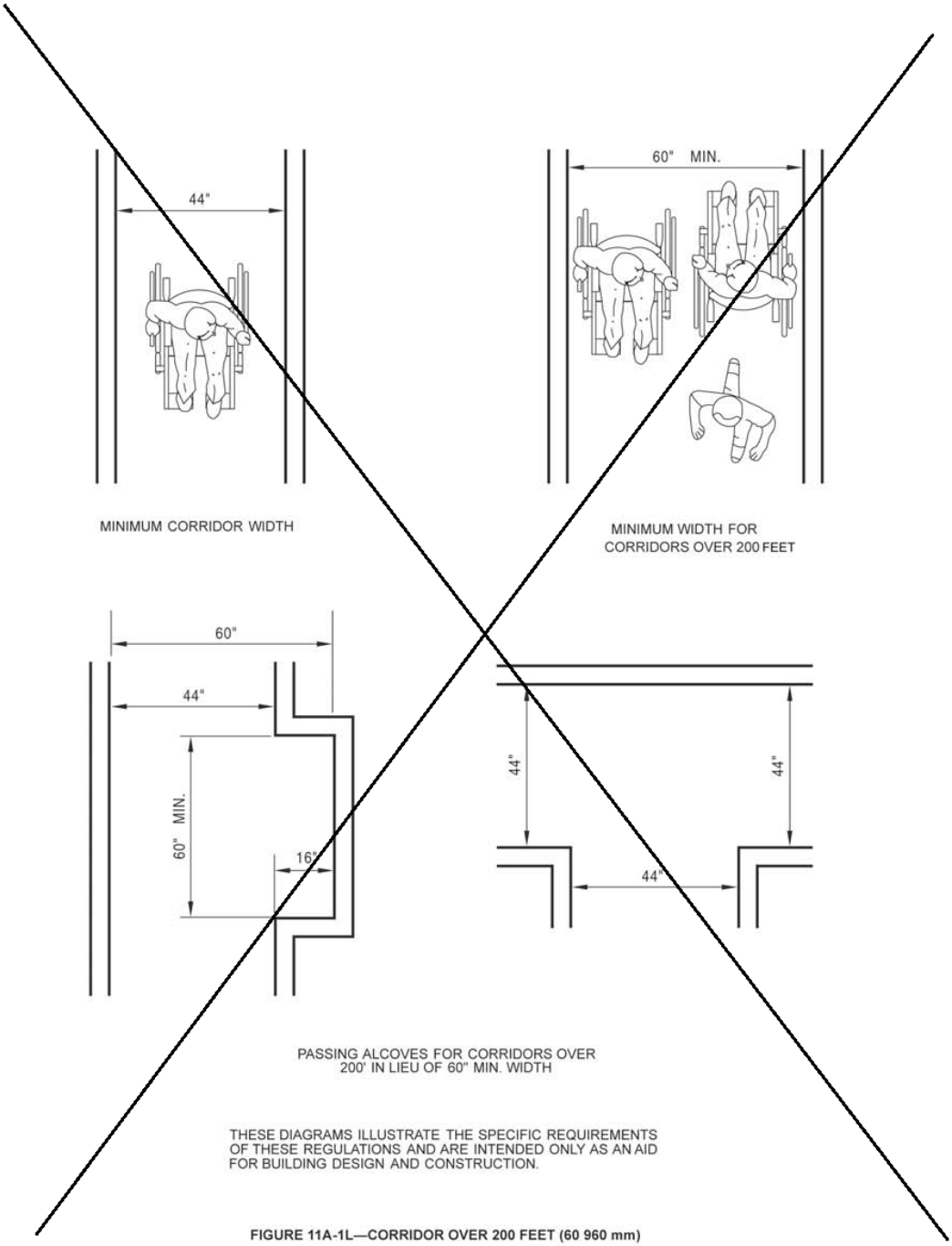

FIGURE 11A-1L—CORRIDOR OVER 200 FEET (60 960 mm)

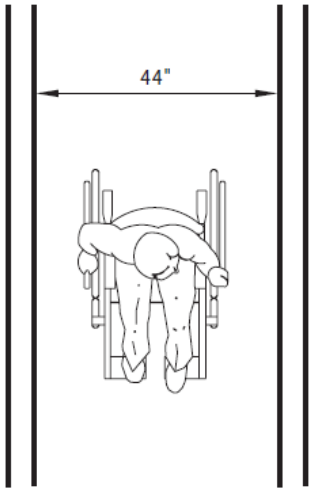

(a) MINIMUM WIDTH FOR CORRIDORS

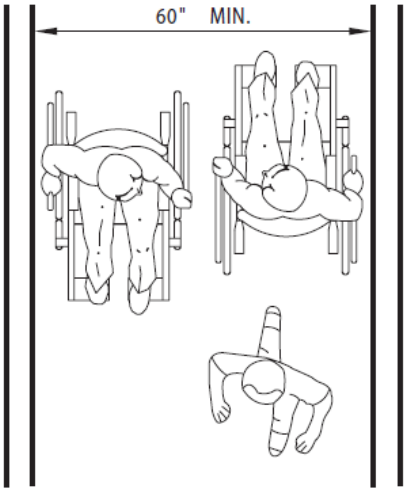

(b) MINIMUM WIDTH FOR CORRIDORS OVER 200 FEET

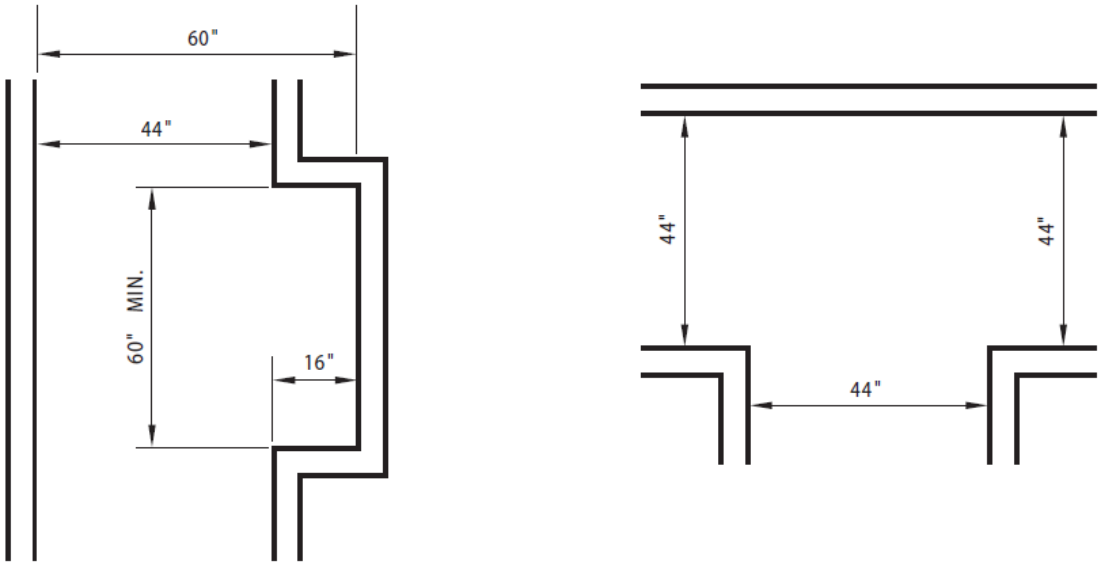

(c) PASSING METHODS FOR CORRIDORS WITH LENGTH OVER 200 FEET AND WIDTH LESS THAN 60"

FIGURE 11A-1L
INTERIOR ACCESSIBLE ROUTE (CORRIDOR) OVER 200 FEET; OCCUPANT LOAD 10 OR MORE

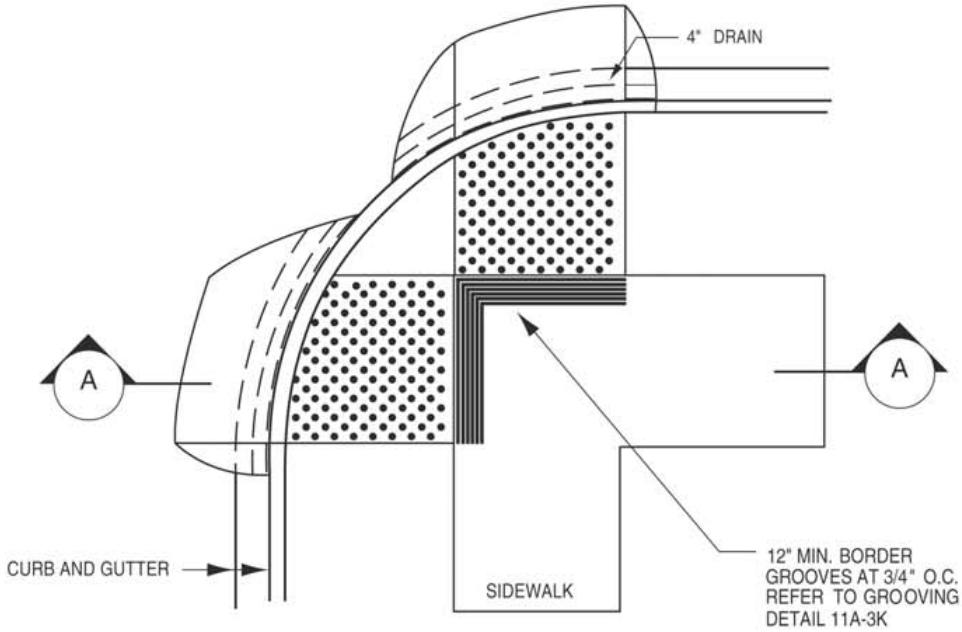

~~SEE FIGURE 11B-19A~~

THIS DIAGRAM ILLUSTRATES THE SPECIFIC REQUIREMENTS OF THESE REGULATIONS AND IS INTENDED ONLY AS AN AID FOR BUILDING DESIGN AND CONSTRUCTION.

FIGURE 11A-3B - CURB DETAIL

~~**FIGURE 11A-3M - RETURNED CURB STYLE (See Figure 11B-21)**~~
~~**FIGURE 11A-3N - TRUNCATED DOMES (See Figure 11B-23A)**~~
~~**FIGURE 11A-3 (RESERVED)**~~

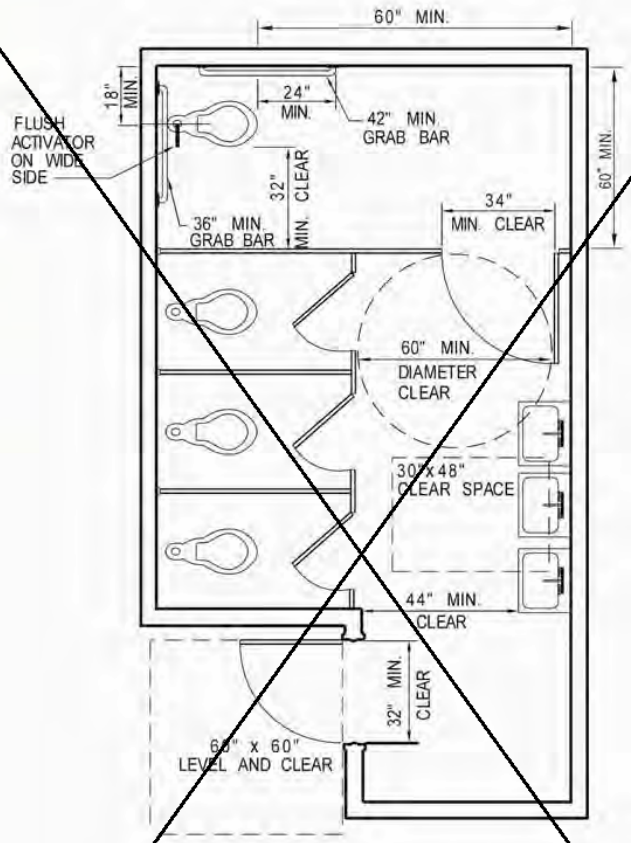

THIS DIAGRAM ILLUSTRATES THE SPECIFIC REQUIREMENTS OF THESE REGULATIONS AND IS INTENDED ONLY AS AN AID FOR BUILDING DESIGN AND CONSTRUCTION.

FIGURE 11A-9A—MULTIPLE-ACCOMMODATION TOILET FACILITY

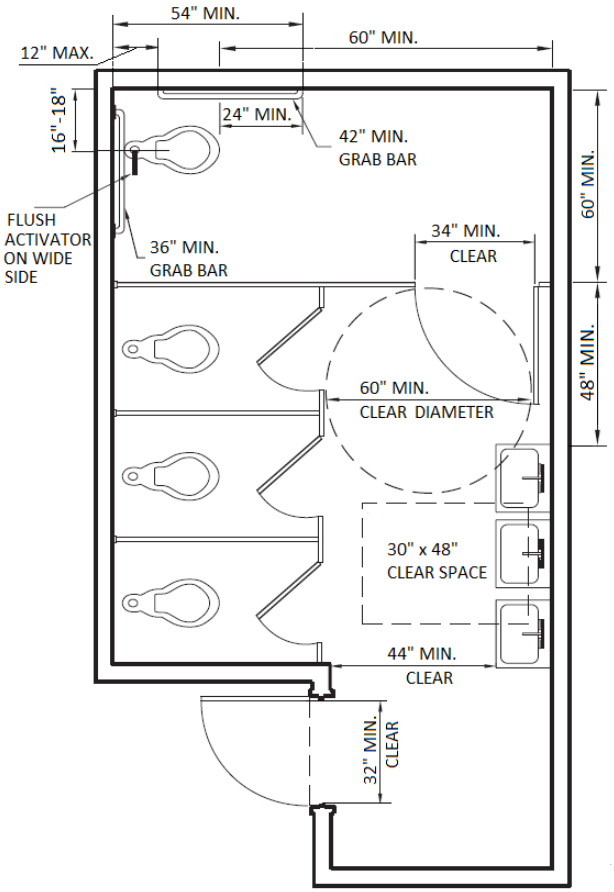

(a) MULTIPLE-ACCOMMODATION TOILET FACILITY

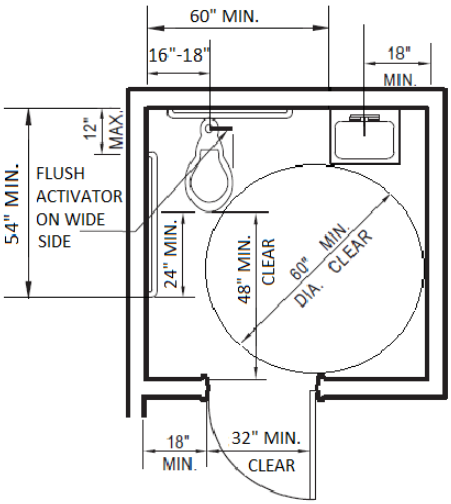

(b) SINGLE-ACCOMMODATION TOILET FACILITY

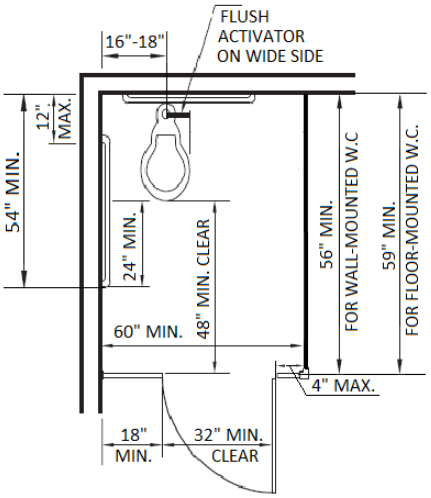

(c) ACCESSIBLE WATER CLOSET COMPARTMENT
WITHIN MULTIPLE-ACCOMMODATION TOILET FACILITY

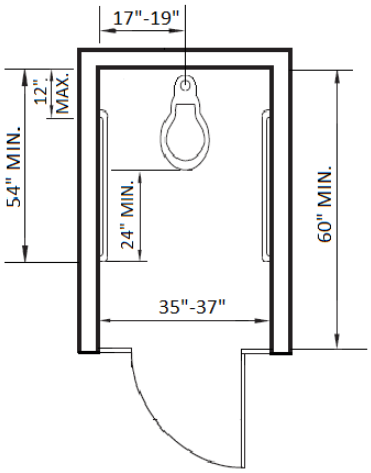

(d) AMBULATORY ACCESSIBLE COMPARTMENT

FIGURE 11A-9A
TOILET FACILITIES

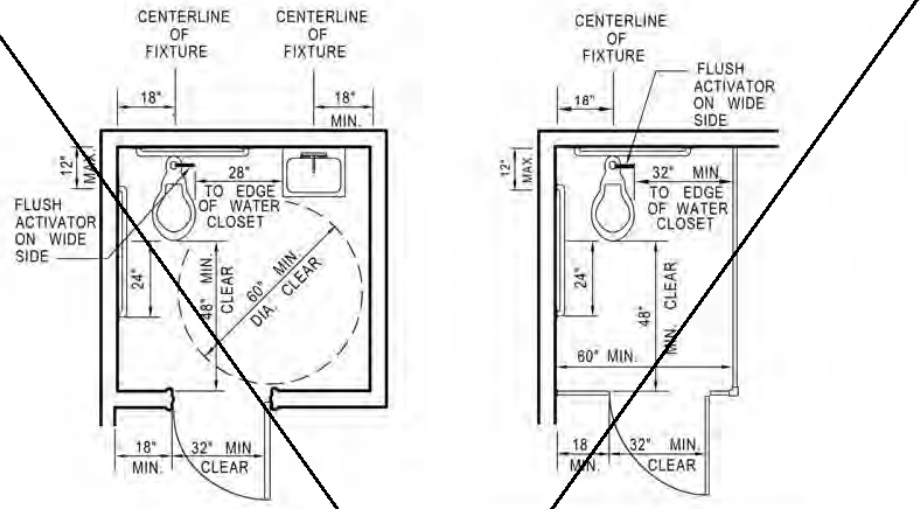

SINGLE-ACCOMMODATION TOILET FACILITY

ACCESSIBLE WATER CLOSET COMPARTMENT WITHIN A MULTIPLE-ACCOMMODATION TOILET FACILITY

SIDE ELEVATION

THESE DIAGRAMS ILLUSTRATE THE SPECIFIC REQUIREMENTS OF THESE REGULATIONS AND ARE INTENDED ONLY AS AN AID FOR BUILDING DESIGN AND CONSTRUCTION

FIGURE 11A-9B

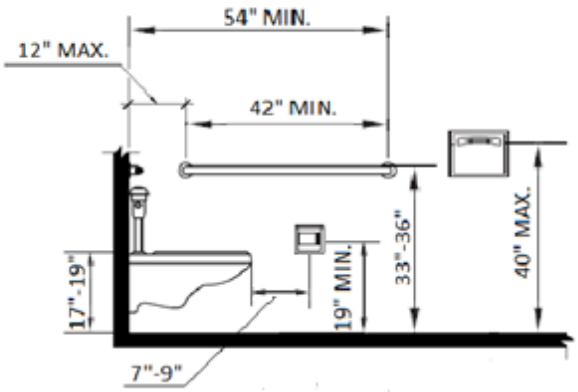

(a) SIDE VIEW

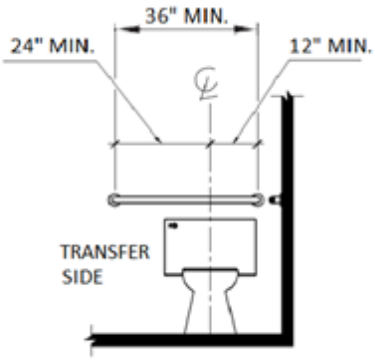

(b) FRONT VIEW

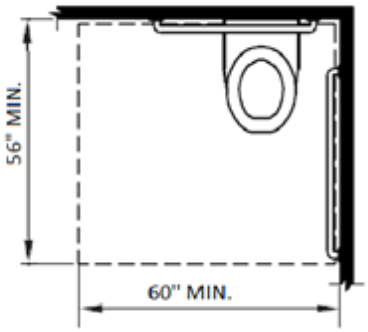

(c) CLEAR FLOOR SPACE AT WATER CLOSETS

FIGURE 11A-9B
WATER CLOSETS

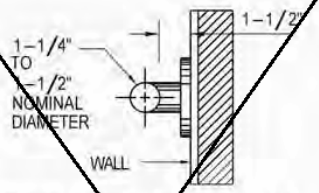

SECTION THROUGH TYPICAL GRAB BAR

THESE DIAGRAMS ILLUSTRATE THE SPECIFIC REQUIREMENTS OF THESE REGULATIONS AND ARE INTENDED ONLY AS AN AID FOR BUILDING DESIGN AND CONSTRUCTION

FIGURE 11A-9C—GRAB BAR SECTION

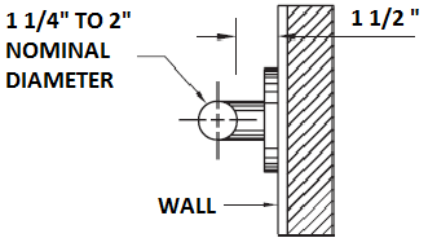

(a) SECTION THROUGH TYPICAL CIRCULAR GRAB BAR

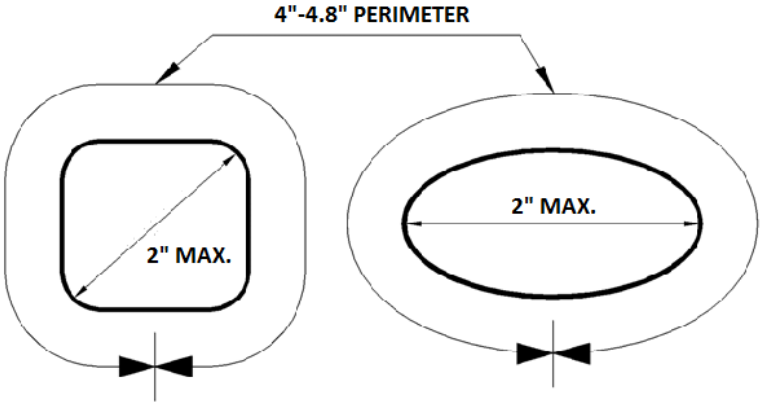

(b) NON-CIRCULAR CROSS SECTIONS

FIGURE 11A-9C
GRAB BARS

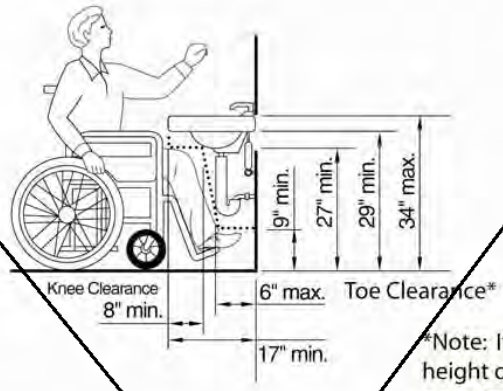

*Note: If a minimum 9 inches height of toe clearance is provided, a maximum of 6 inches of the 48 inches of clear floor space required at the fixture may extend into the toe space.

SIDE ELEVATION

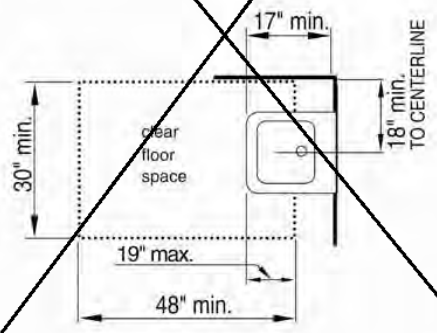

PLAN VIEW

THIS DIAGRAM ILLUSTRATES THE SPECIFIC REQUIREMENTS OF THESE REGULATIONS AND IS INTENDED ONLY AS AN AID FOR BUILDING DESIGN AND CONSTRUCTION.

FIGURE 11A-9D—KNEE CLEARANCE

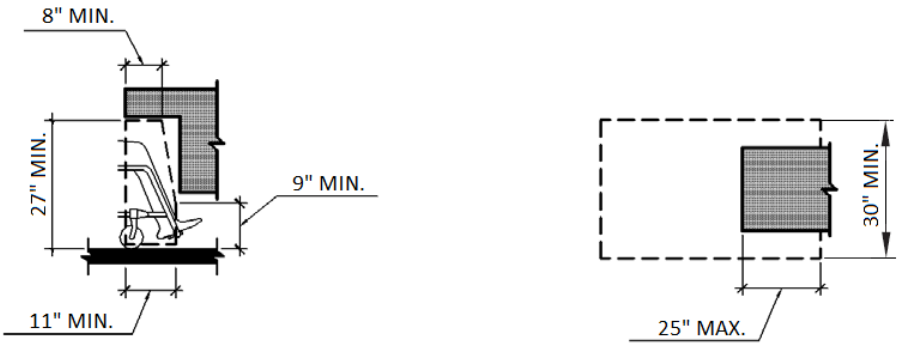

(a) KNEE SPACE - GENERAL REQUIREMENT

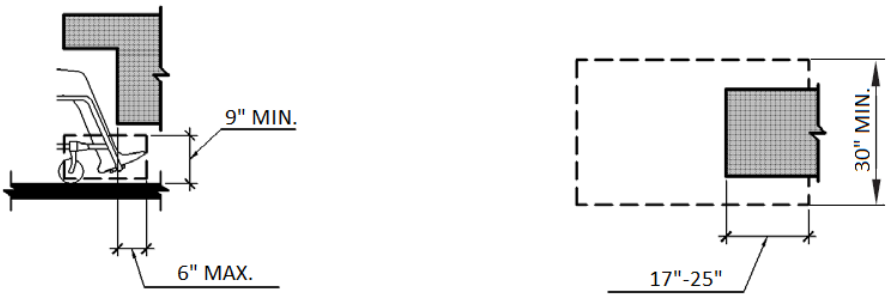

(b) TOE SPACE - GENERAL REQUIREMENT

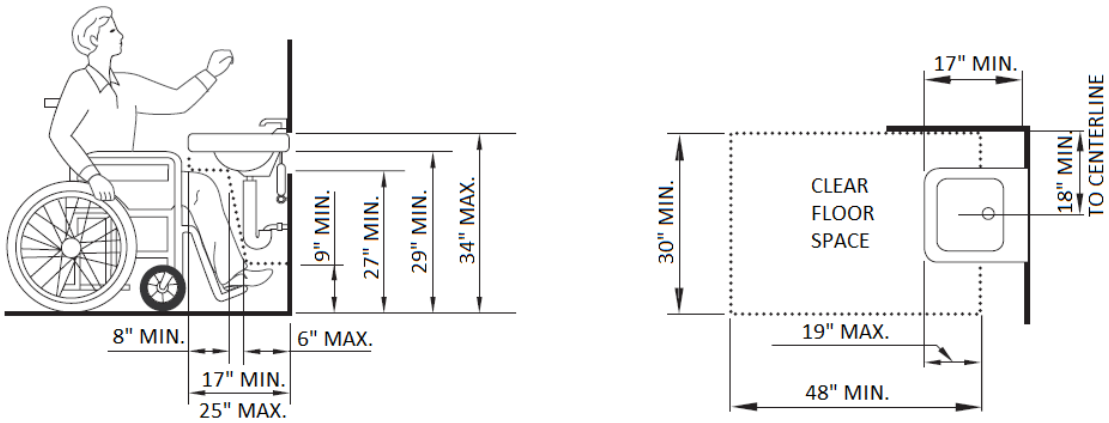

(c) KNEE AND TOE SPACE FOR LAVATORIES

FIGURE 11A-9D
KNEE AND TOE SPACE

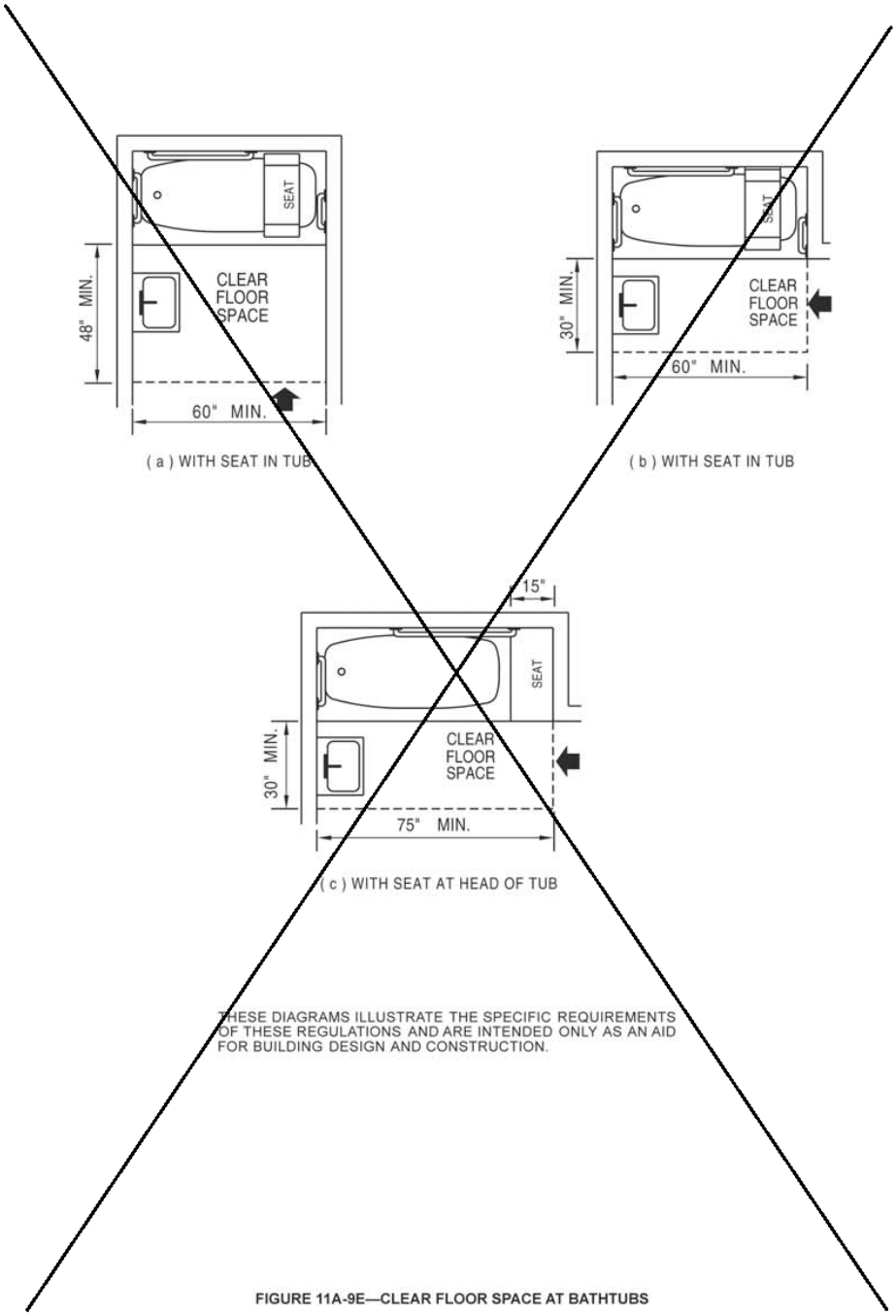

FIGURE 11A-9E—CLEAR FLOOR SPACE AT BATHTUBS

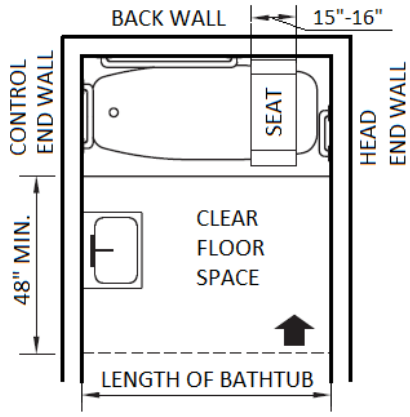

(a) REMOVABLE SEAT IN TUB - FRONT APPROACH

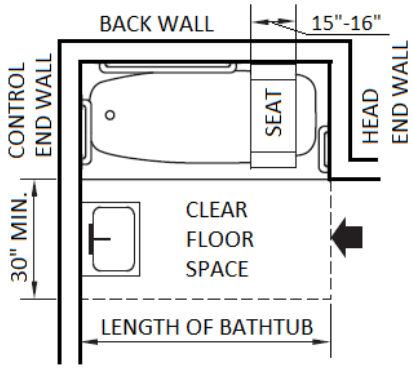

(b) REMOVABLE SEAT IN TUB - SIDE APPROACH

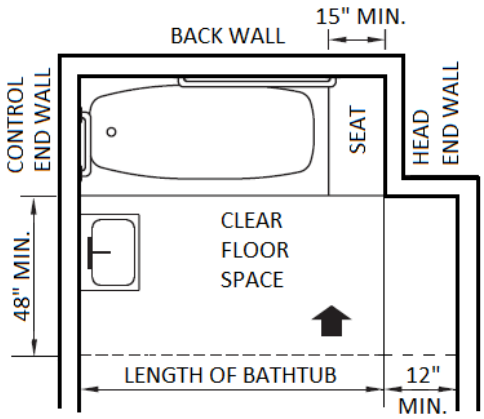

(c) PERMANENT SEAT IN TUB - FRONT APPROACH

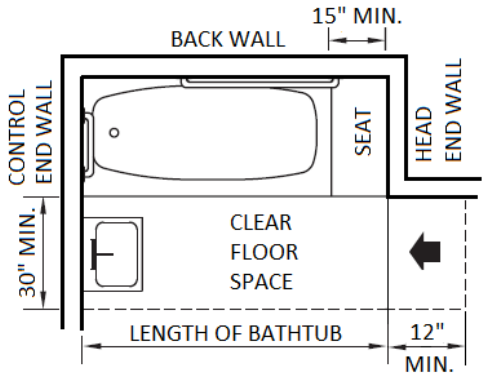

(d) PERMANENT SEAT IN TUB - SIDE APPROACH

FIGURE 11A-9E
CLEAR FLOOR SPACE AT BATHTUBS

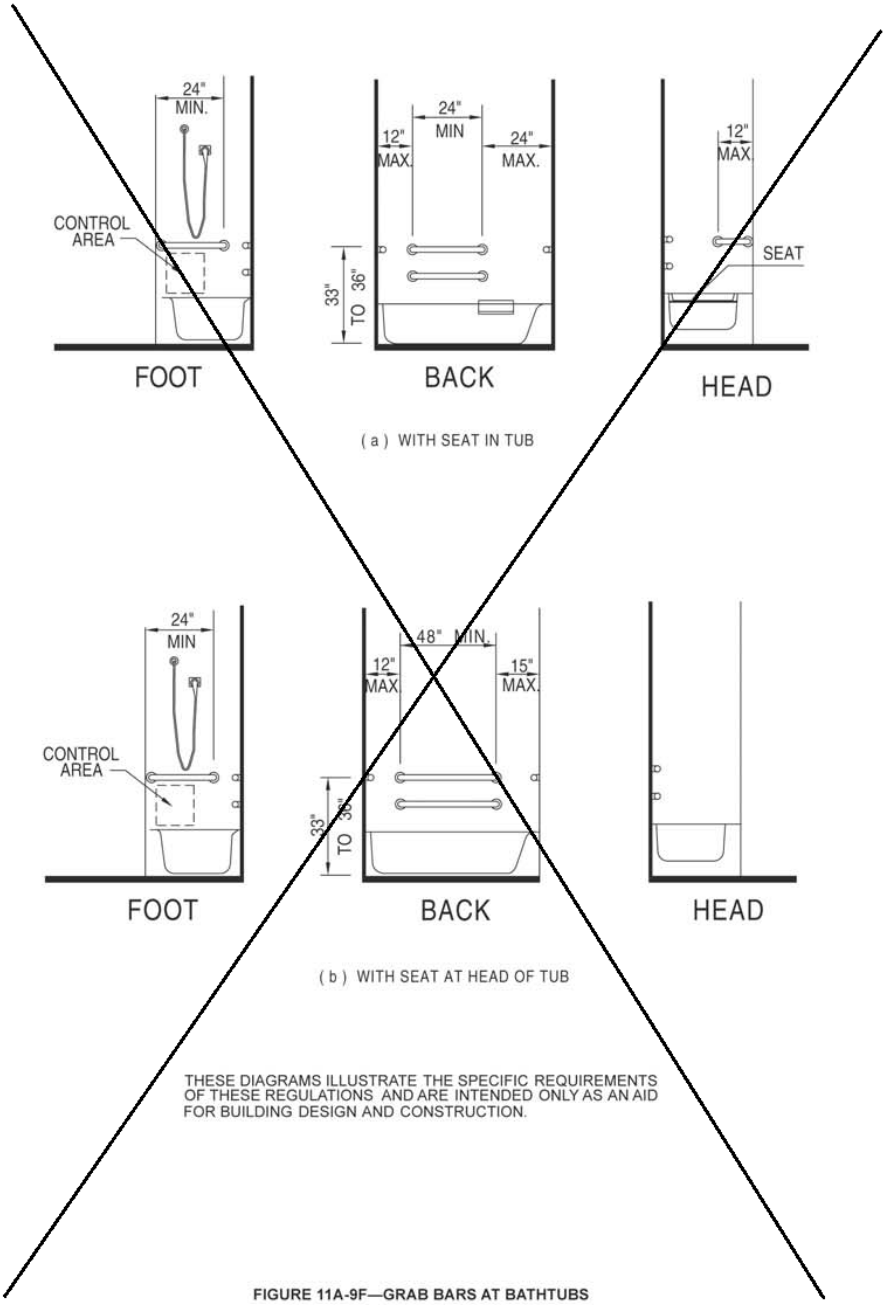

FIGURE 11A-9F—GRAB BARS AT BATHTUBS

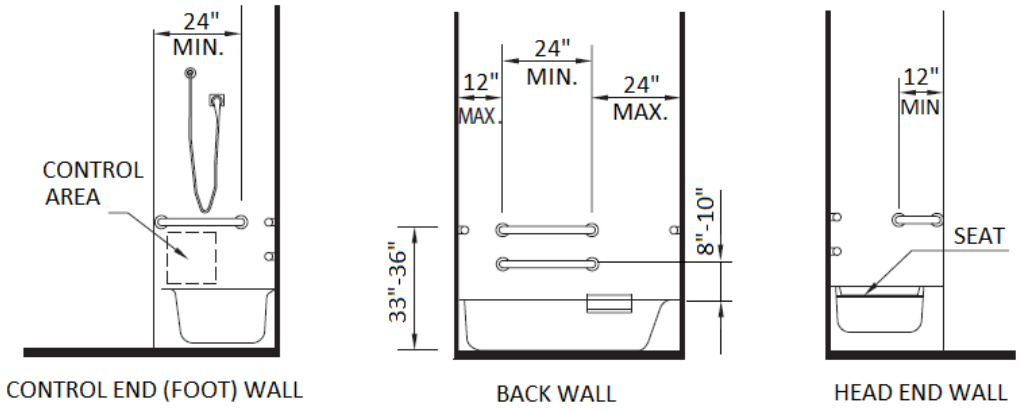

(a) WITH REMOVABLE SEAT IN TUB

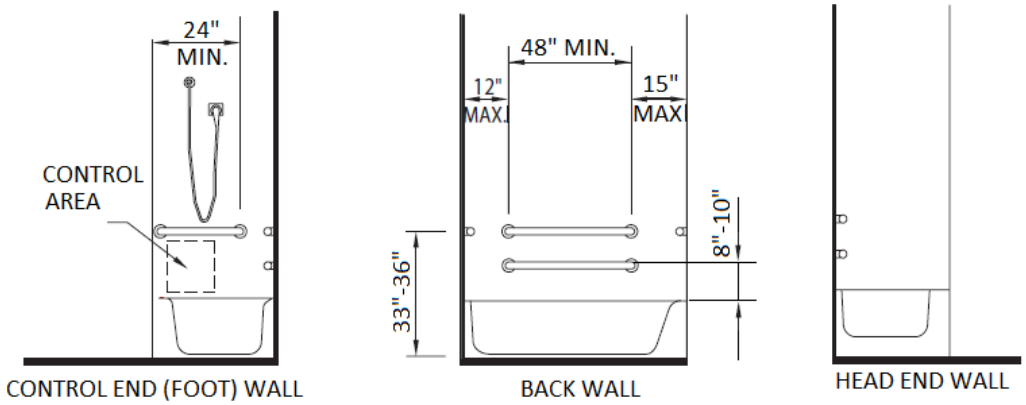

(b) WITH PERMANENT SEAT AT HEAD OF TUB

FIGURE 11A-9F
GRAB BARS AT BATHTUBS

(a) WATER CLOSET IN ADAPTABLE BATHROOMS

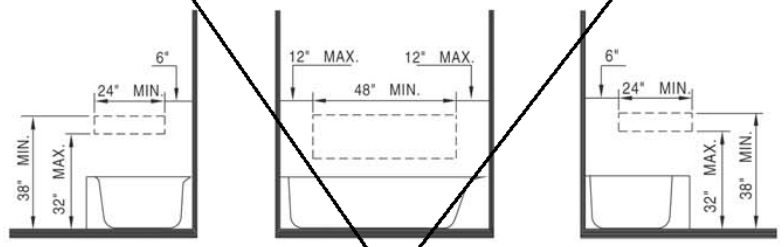

NOTE: THE AREA OUTLINED IN DASHED LINES REPRESENT LOCATIONS FOR FUTURE INSTALLATION OF GRAB BARS FOR TYP. FIXTURE CONFIGURATIONS

(b) LOCATION OF GRAB BAR REINFORCEMENTS FOR ADAPTABLE BATHTUBS

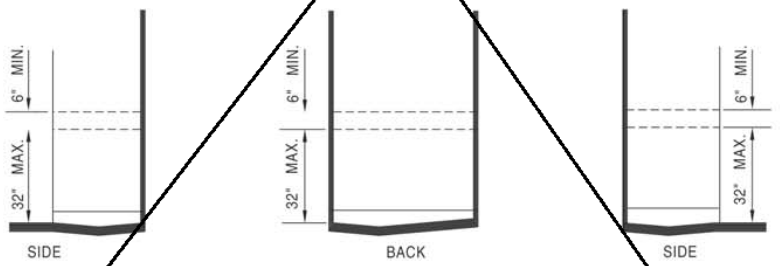

NOTE: THE AREA OUTLINED IN DASHED LINES REPRESENT LOCATION FOR FUTURE INSTALLATION OF GRAB BARS

(a) LOCATION OF GRAB BAR REINFORCEMENTS FOR ADAPTABLE SHOWERS

THESE DIAGRAMS ILLUSTRATE THE SPECIFIC REQUIREMENTS OF THESE REGULATIONS AND ARE INTENDED ONLY AS AN AID FOR BUILDING DESIGN AND CONSTRUCTION.

FIGURE 11A-9G

(a) GRAB BAR REINFORCEMENT FOR ADAPTABLE WATER CLOSETS

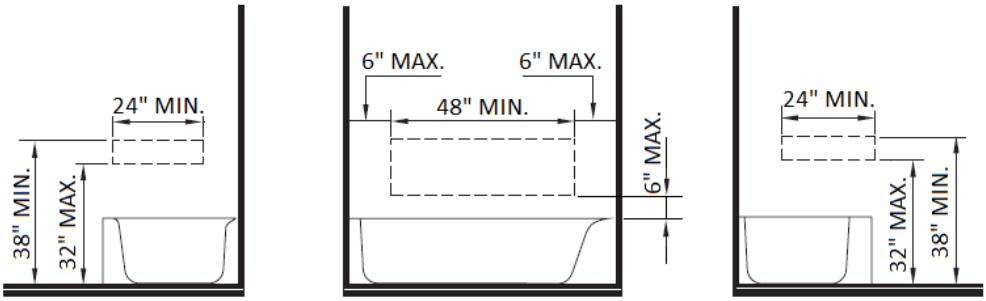

(b) GRAB BAR REINFORCEMENT FOR ADAPTABLE BATHTUBS

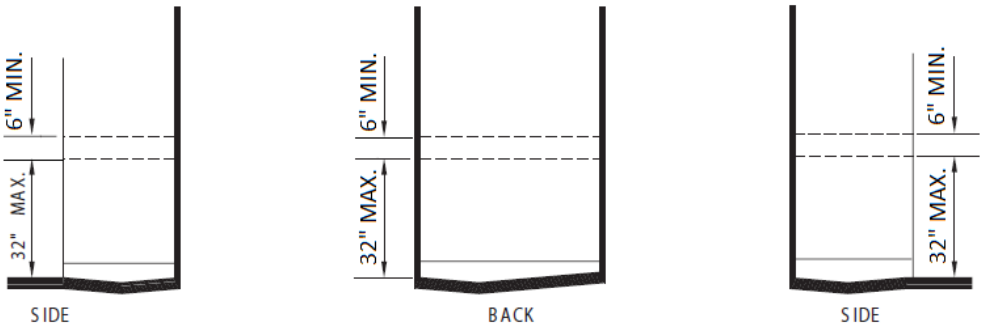

(c) GRAB BAR REINFORCEMENT FOR ADAPTABLE SHOWERS

AREAS OUTLINED IN DISHED LINES REPRESENT LOCATION FOR FUTURE INSTALLATION OF GRAB BARS

FIGURE 11A-9G
REINFORCEMENT FOR GRAB BARS

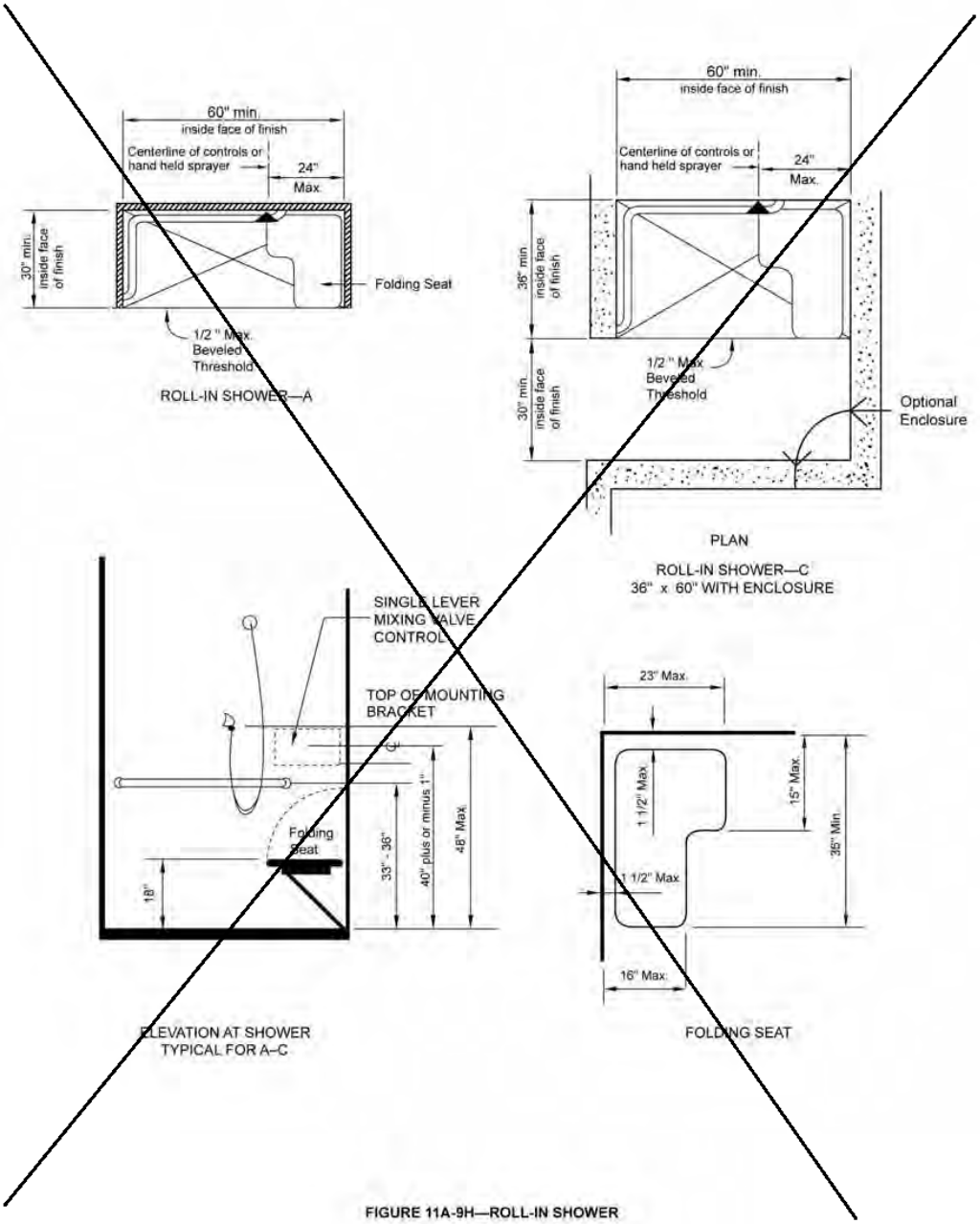

FIGURE 11A-9H—ROLL-IN SHOWER

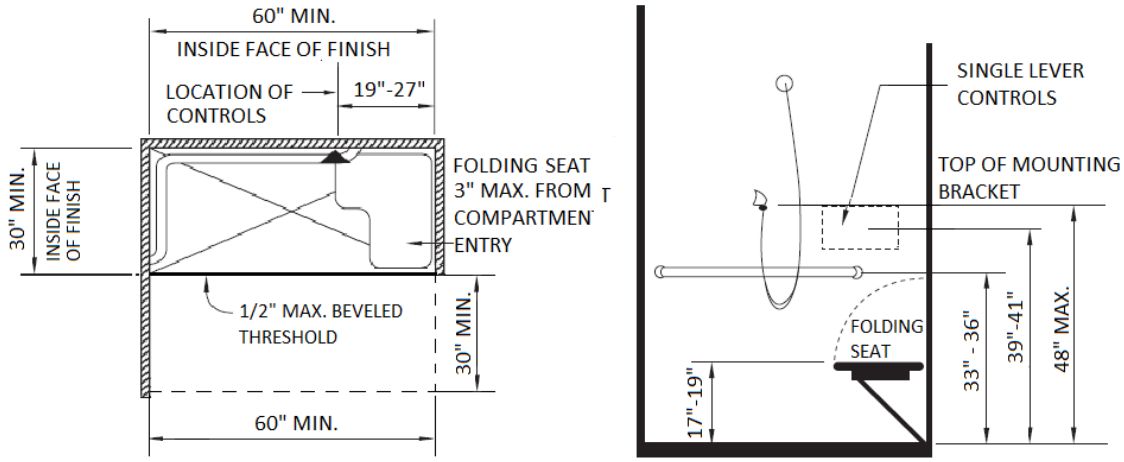

(a) 60" x 30" ROLL-IN SHOWER

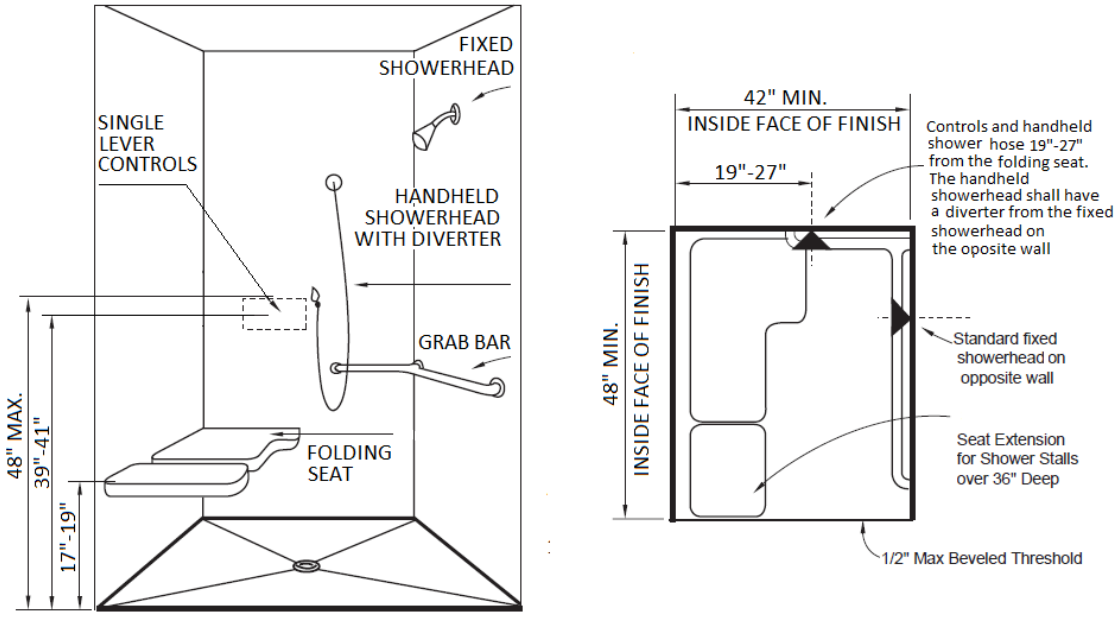

(b) 42" x 48" ROLL-IN SHOWER

FIGURE 11A-9H
STANDARD ROLL-IN SHOWER

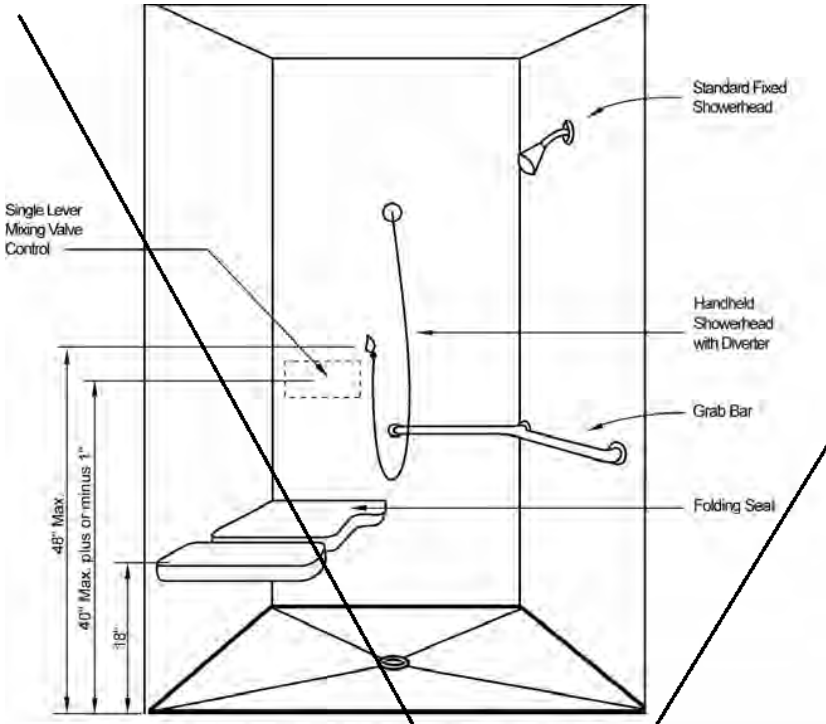

PERSPECTIVE OF ROLL-IN SHOWER—B
42" x 48" CALIFORNIA SIZE

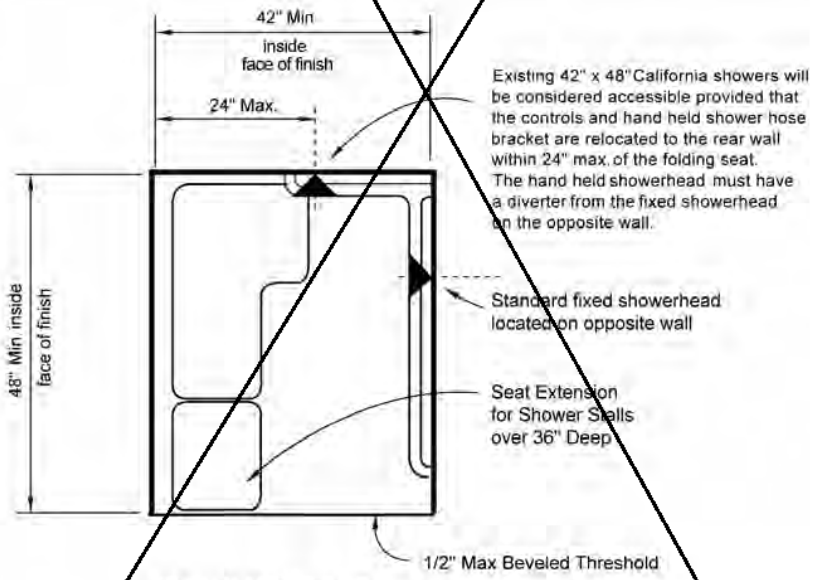

ROLL-IN SHOWER—B
42" x 48" CALIFORNIA SIZE

FIGURE 11A-9I —ROLL-IN SHOWER

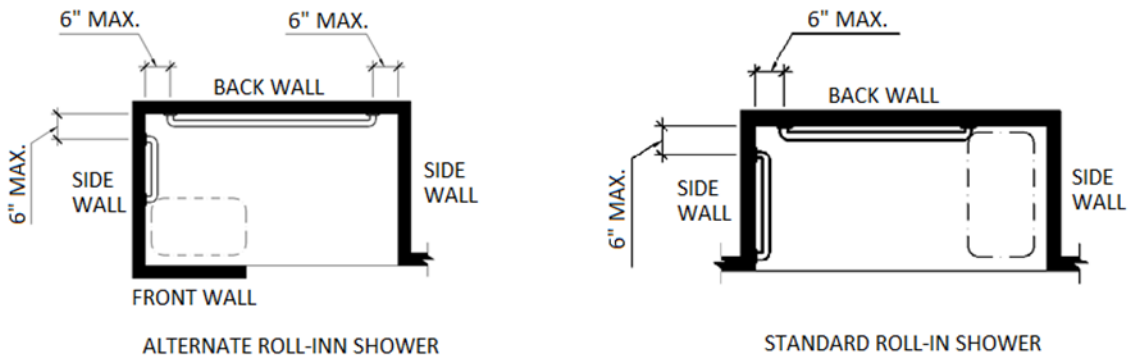

(a) GRAB BARS

(b) SHOWER SEATS

FIGURE 11A-9I
SHOWER SEATS AND GRAB BARS

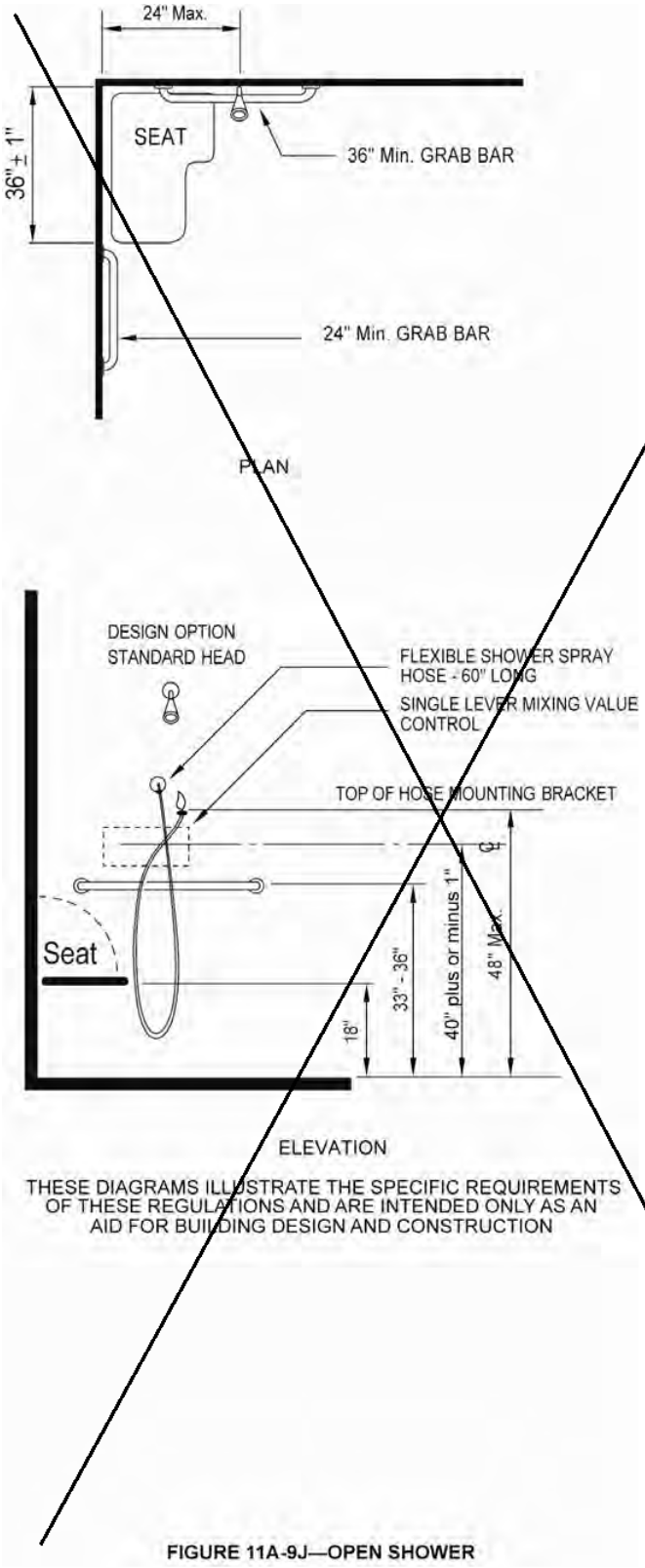

FIGURE 11A-9J—OPEN SHOWER

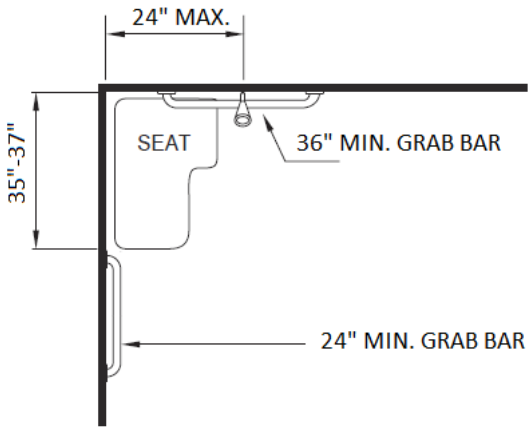

(a) PLAN VIEW

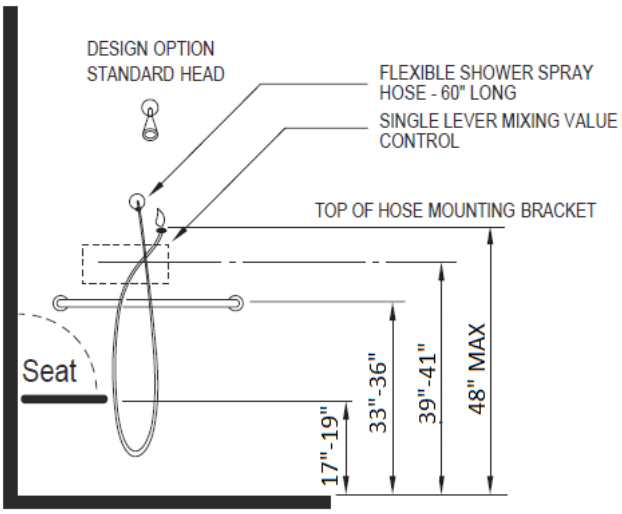

(b) ELEVATION

FIGURE 11A-9J
OPEN SHOWER

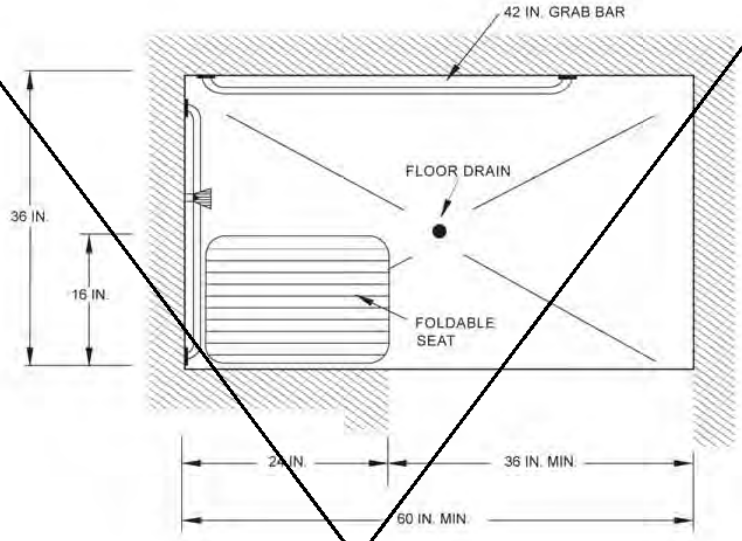

THIS DIAGRAM ILLUSTRATES THE SPECIFIC REQUIREMENTS OF THESE REGULATIONS AND IS INTENDED ONLY AS AN AID FOR BUILDING DESIGN AND CONSTRUCTION.

FIGURE 11A-9K—ALTERNATIVE ROLL-IN

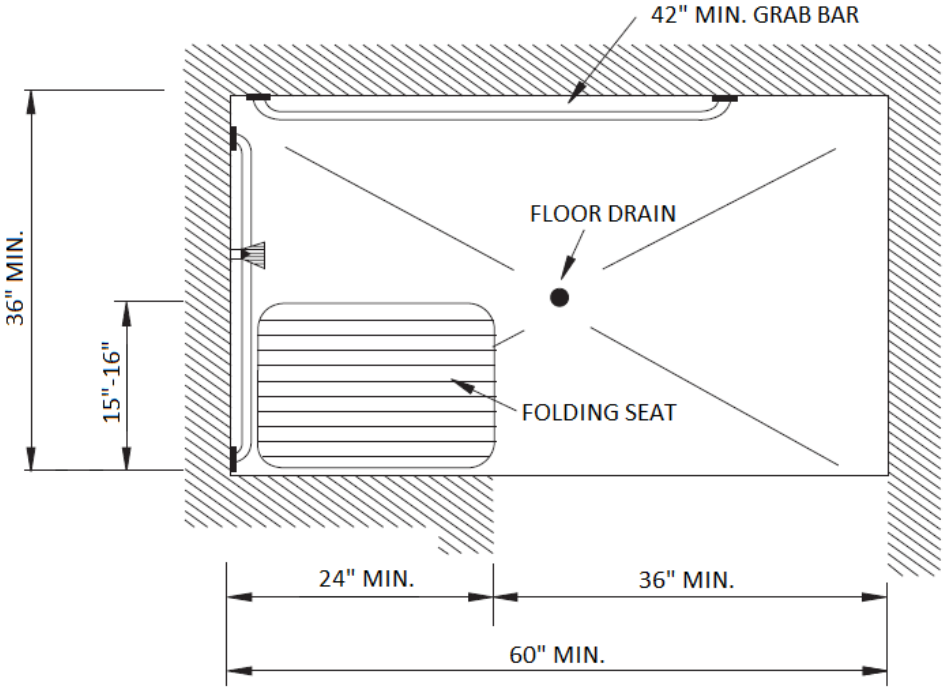

FIGURE 11A-9K
ALTERNATE ROLL-IN SHOWER

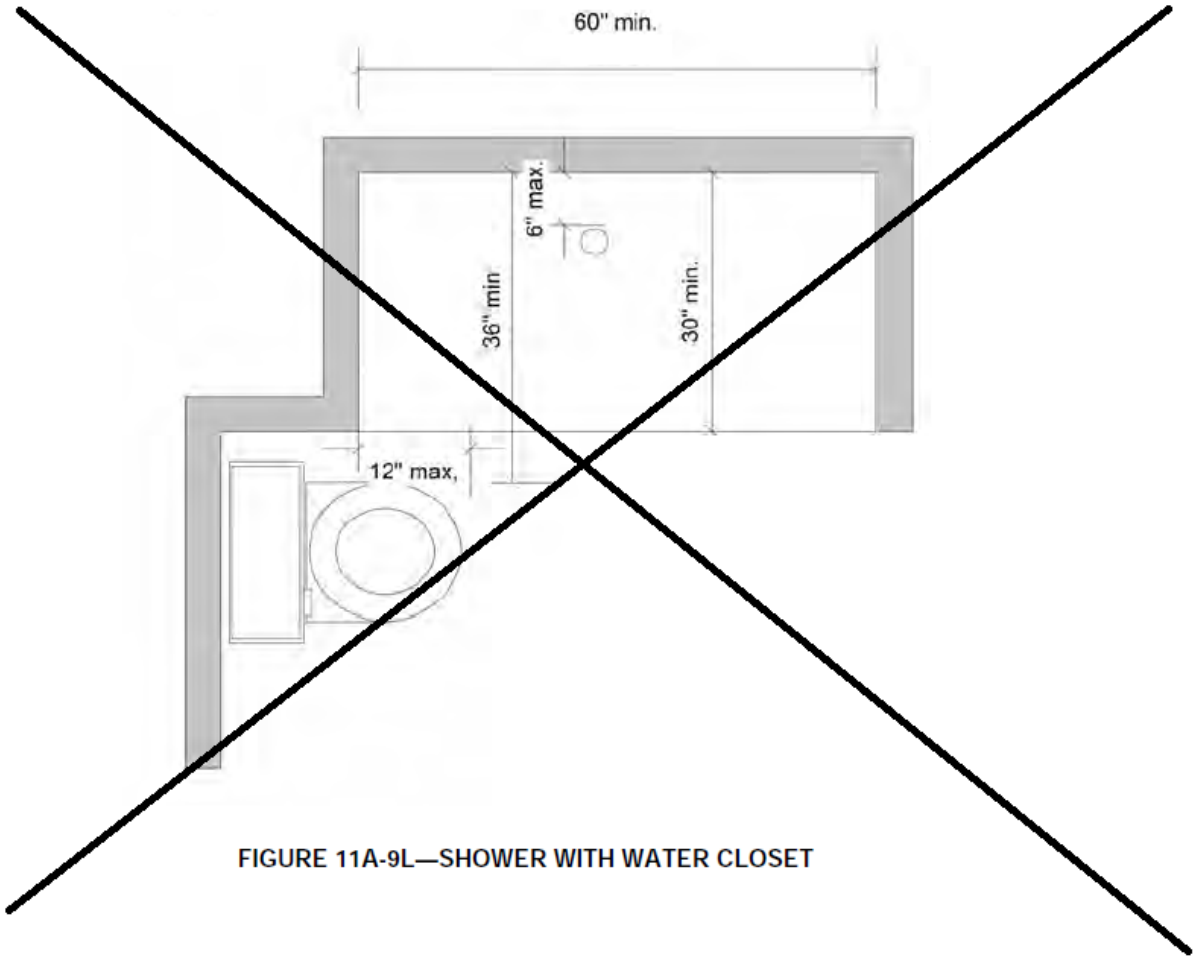

FIGURE 11A-9L—SHOWER WITH WATER CLOSET

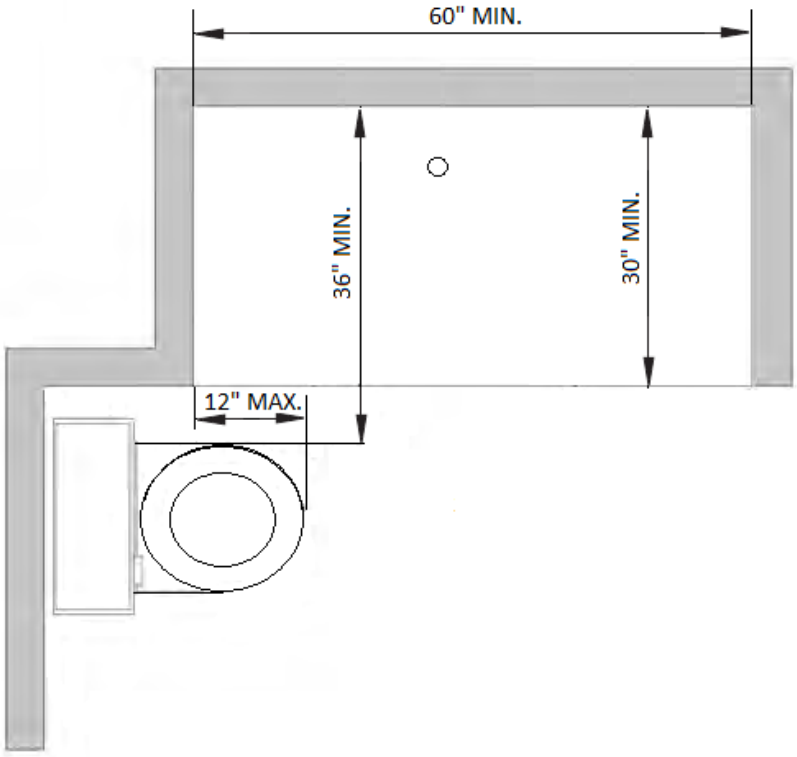

FIGURE 11A-9L
SHOWER WITH WATER CLOSET

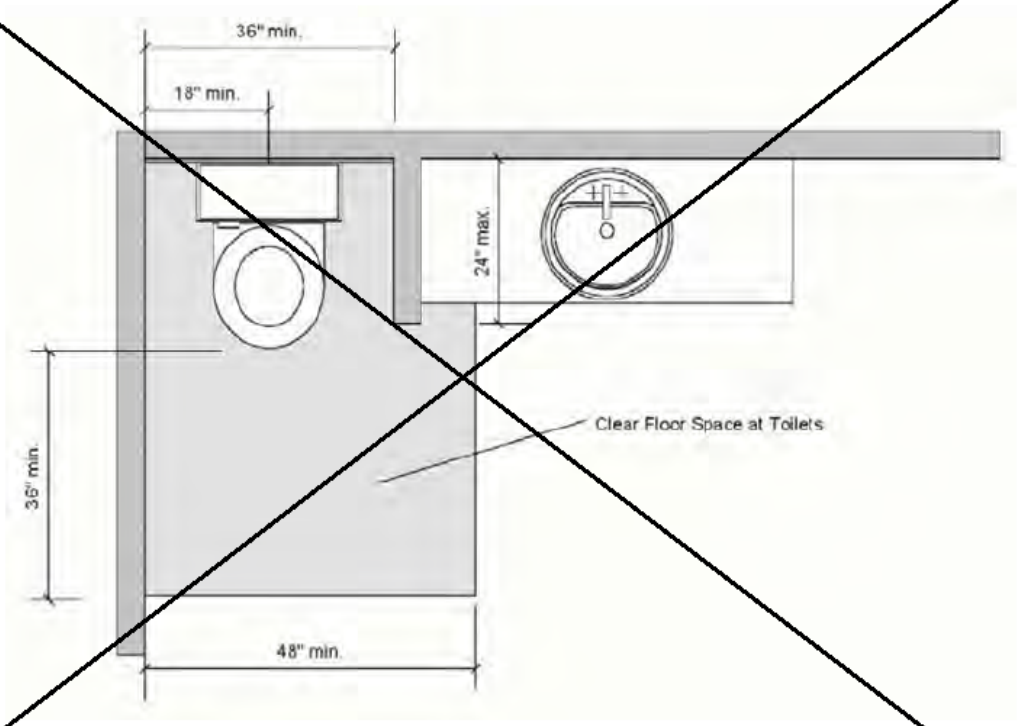

FIGURE 11A-9M—WING WALL OR CABINET AT WATER CLOSET

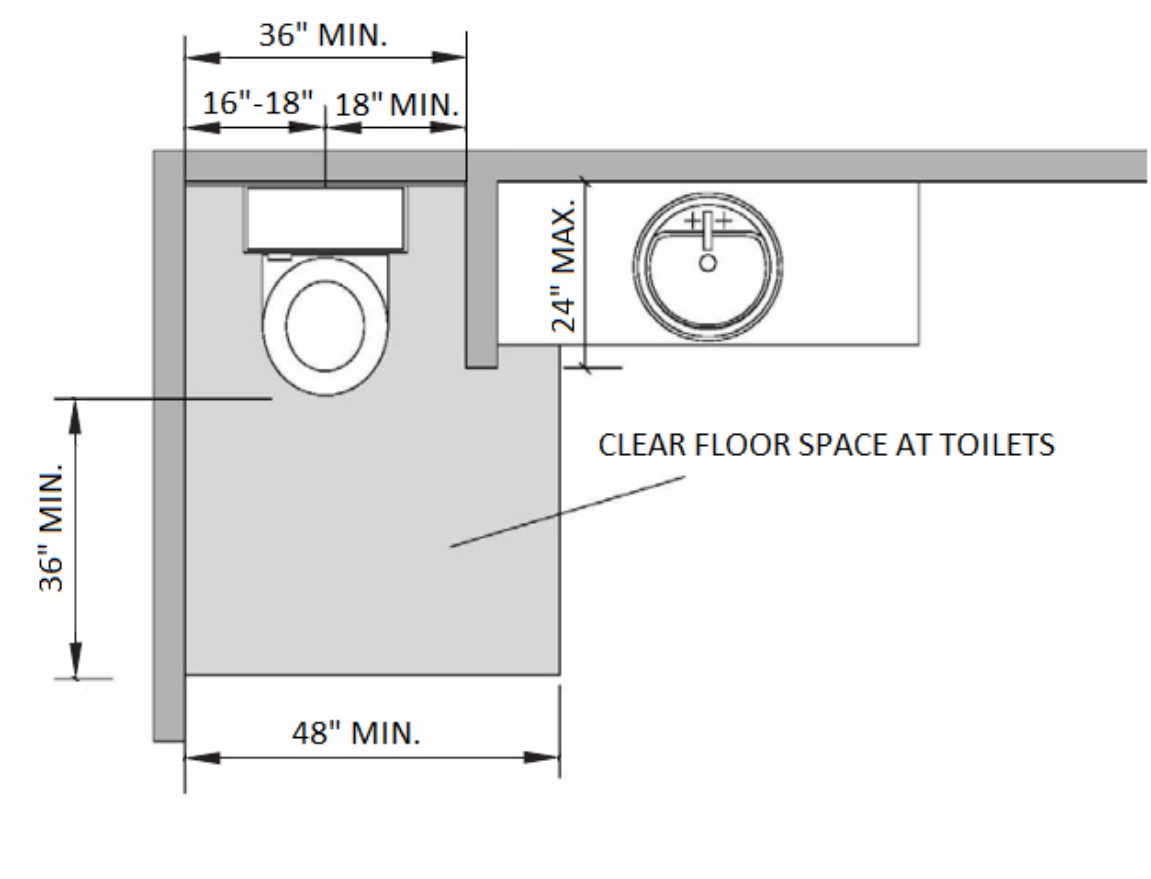

FIGURE 11A-9M

WING WALL OR CABINET AT WATER CLOSET

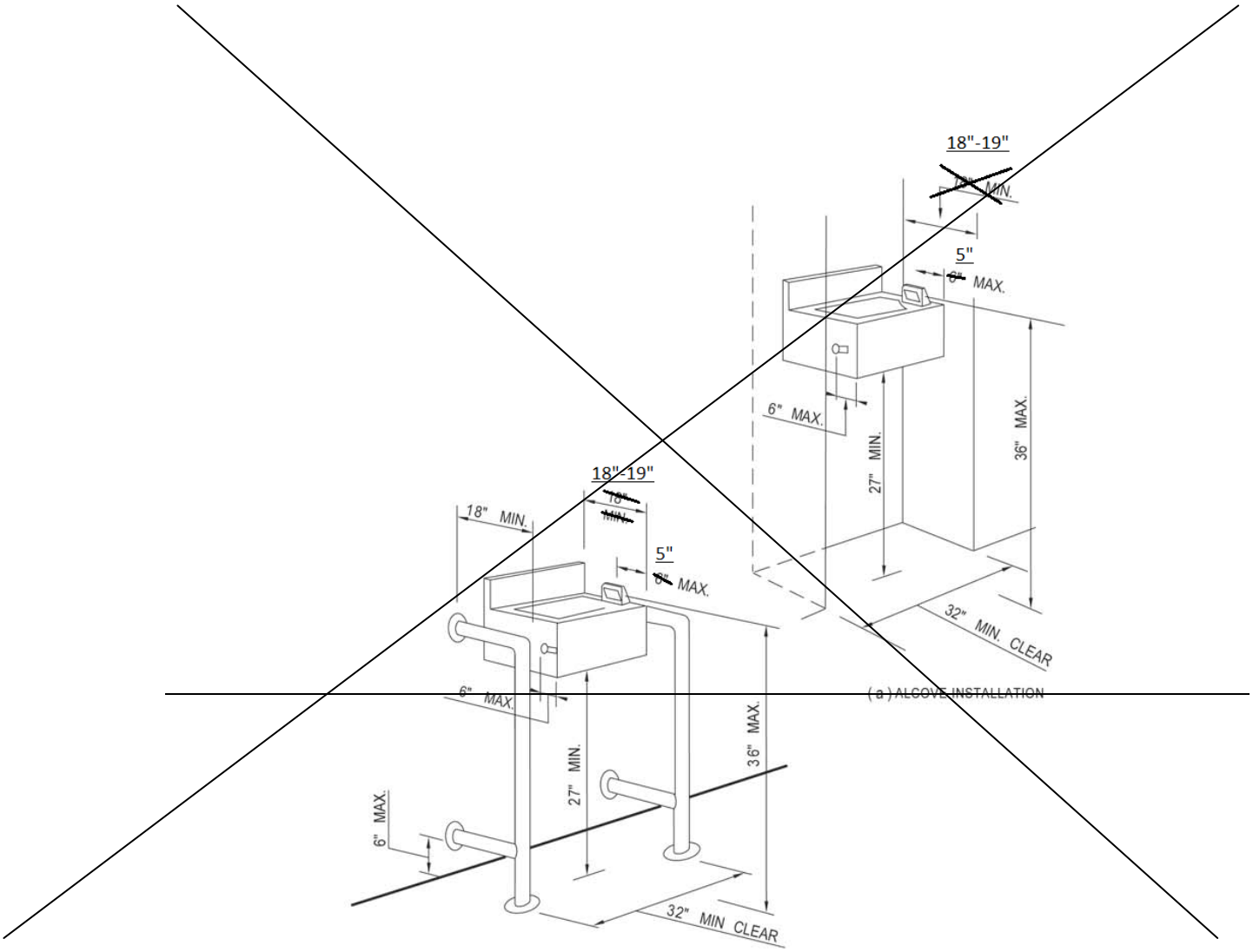

(a) ALCOVE INSTALLATION

(b) NONALCOVE WING WALL INSTALLATION

THESE DIAGRAMS ILLUSTRATE THE SPECIFIC REQUIREMENTS OF THESE REGULATIONS AND ARE INTENDED ONLY AS AN AID FOR BUILDING DESIGN AND CONSTRUCTION

FIGURE 11A-11A—WATER FOUNTAINS

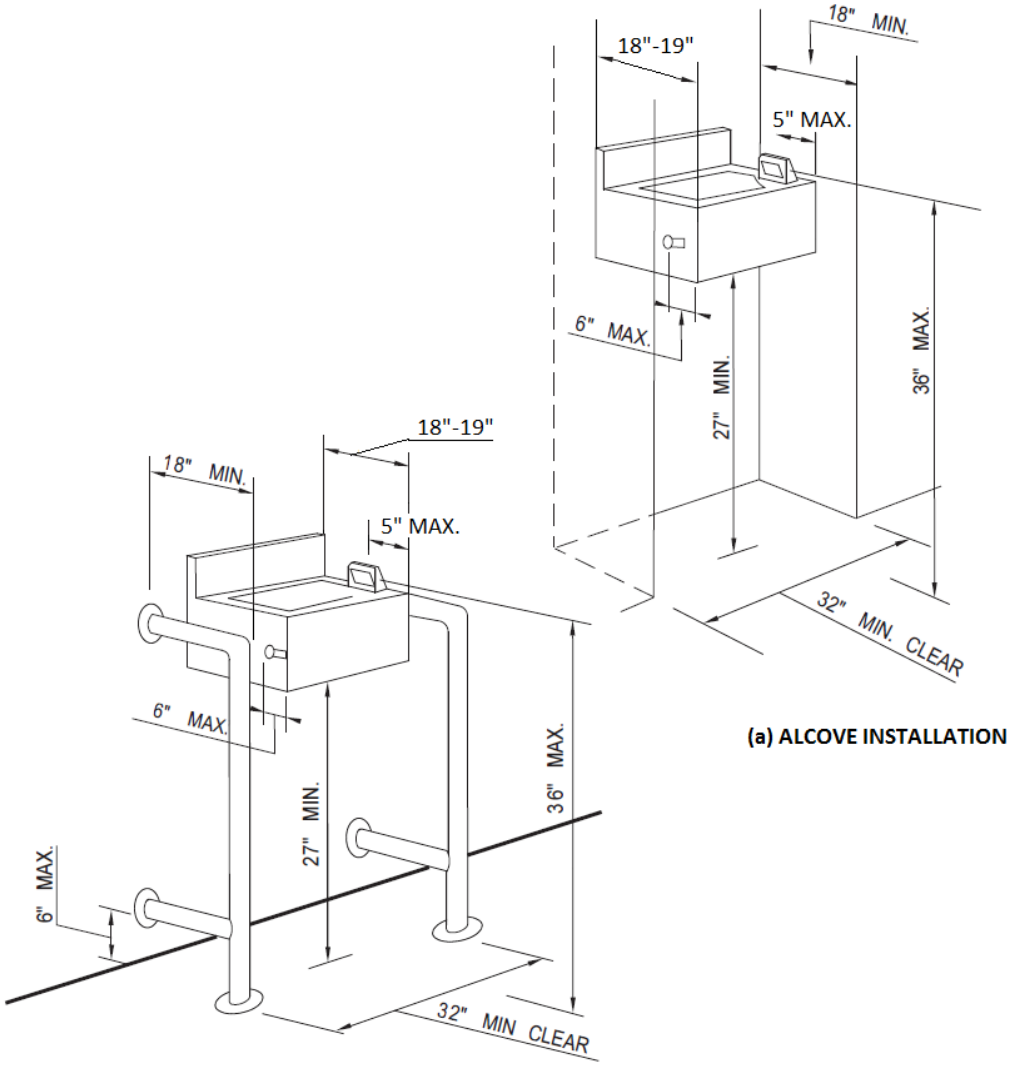

FIGURE 11A-11A
DRINKING FOUNTAINS

PART 2

NOTE: *The language in Part 2 is brought forward from the previous code adoption cycle without change, except for nonsubstantive editorial corrections, and is displayed for context and for the convenience of code users.*

27. HCD proposes to bring forward existing California Amendments in Chapter 11A from the 2010 California Building Code for adoption into the 2013 California Building Code without amendments, except for nonsubstantive editorial corrections as follows:

CHAPTER 11A
HOUSING ACCESSIBILITY

NOTE: *Dwelling units constructed as senior citizen housing may also be subject to the Unruh Civil Rights Act. Refer to Division I, Part 2 of the California Civil Code. For additional information regarding application, interpretation and enforcement, contact the California Department of Fair Employment and Housing.*

Division I — APPLICATION, GENERAL PROVISIONS, AND DEFINITIONS

Division I Table of Contents

Section 1101A Application
Section 1102A Building Accessibility
Section 1103A Design and Construction
Section 1104A Covered Multifamily Dwellings
Section 1105A Garages, Carports and Parking Facilities
Section 1106A Site and Building Characteristics
Section 1107A Definitions

SECTION 1101A
APPLICATION

1101A.1 Scope. *The application and authority of this chapter are identified and referenced in Sections 1.8.2.1.2 and 1102A for the Department of Housing and Community Development. Applicable sections are identified in the Matrix Adoption Tables of this code under the abbreviation HCD 1-AC.The provisions of this chapter shall apply to the following:*

1. All newly-constructed covered multifamily dwellings.
2. New common use spaces serving existing covered multifamily dwellings.
3. Additions to existing buildings, where the addition alone meets the definition of a covered multifamily dwelling.
4. Common-use areas serving covered multifamily dwellings.
5. Where any portion of a building's exterior is preserved, but the interior of the building is removed, including all structural portions of floors and ceilings, the building is considered a new building for determining the application of this chapter.

These building standards generally do not apply to public accommodations such as hotels and motels. Public use areas, public accommodations, and public housing ~~which is publicly funded~~ as defined in Chapter 2 of this code are subject to provisions of the Division of the State Architect (DSA-AC) and are referenced in Section 1.9.1.1.

SECTION 1102A
BUILDING ACCESSIBILITY

1102A.1 Where required.
(See Part 1 of this document for proposed amendment to this section.)

1102A.2 Existing buildings.
(See Part 1 of this document for proposed amendment to this section.)

1102A.3 Multistory dwellings.

1102A.3.1 Multistory apartment or condominium dwellings in buildings with no elevator. *This section shall apply to multistory dwelling units on the ground floor of buildings without elevators for which an application for a construction permit is submitted on or after July 1, 2005.*

> ***Exception:*** *Carriage units as defined in ~~Section 1107A.3-C~~ Chapter 2 and regulated only by the Department of Housing and Community Development as referenced in Section 1.8.2.1.2 .*

At least 10 percent but not less than one of the multistory dwellings in apartment buildings with 3 or more dwelling units and/or condominiums with 4 or more dwelling units shall comply with the following:

1. *The primary entry to the dwelling unit shall be on an accessible route unless exempted by site impracticality tests in Section 1150A.*
2. *At least one powder room or bathroom shall be located on the primary entry level, served by an accessible route and shall comply with the provisions in Division IV.*
3. *All rooms or spaces located on the primary entry level shall be served by an accessible route and shall comply with the provisions in Division IV. Rooms and spaces located on the primary entry level and subject to this chapter may include but are not limited to kitchens, powder rooms, bathrooms, living rooms, bedrooms or hallways.*
4. *Common use areas covered by this section shall be accessible as required by this chapter. Public use areas as defined in Chapter 2~~, Chapter 11A, and Chapter 11B~~ of this code are subject to provisions of the Division of the State Architect (DSA-AC) and are referenced in Section 1.9.1.*

The minimum number of multifamily dwelling units which must comply with this section shall be calculated using the total number of all multistory dwelling units in buildings on a site which are subject to this section. Any fraction thereof shall be rounded to the next highest whole number.

1102A.3.2 Multistory dwelling units in buildings with one or more elevators. *Multistory dwelling units contained in buildings with elevators shall comply with this section. For multistory dwelling units in buildings with elevators, the story of the unit that is served by the building elevator is considered a ground floor and the primary entry floor to the unit and shall comply with the following:*

1. At least 1 powder room or bathroom shall be located on the primary entry level.
2. All rooms or spaces located on the primary entry level shall be served by an accessible route and shall comply with Division IV.

1102A.4 Participation areas.
(See Part 1 of this document for proposed amendment to this section.)

1102A.5 Swimming pools. *Swimming pools and spas required to be accessible shall comply with the provisions of Section 1141A.*

1102A.6 Temporary restrictions. *During periods of partial or restricted use of a building or facility, the entrances used for primary access shall be accessible to and usable by persons with disabilities.*

SECTION 1103A
DESIGN AND CONSTRUCTION

1103A.1 General.

1103A.1.1 *When buildings are required to be accessible, they shall be designed and constructed as provided in this chapter.*

> ***Note:*** *Public use areas, public accommodations, and public housing ~~which is publicly funded~~ as defined in Chapter 2 of this code are subject to provisions of the Division of the State Architect (DSA-AC) and are referenced in Section 1.9.1.1.*

SECTION 1104A
COVERED MULTIFAMILY DWELLINGS

1104A.1 General. *All ground-floor dwelling units in nonelevator buildings shall be adaptable and on an accessible route, unless an accessible route is not required as determined by site impracticality provisions in Section 1150A. For buildings with elevators, see Section 1106A.*

Multistory dwelling units shall comply with Section 1102A.3.

1104A.2 Ground floors above grade. *Where the first floor containing dwelling units in a building is above grade, all units on that floor shall be served by an accessible route. This floor will be considered a ground floor and all dwelling units are considered covered multifamily dwelling units.*

> ***Exception:*** *Carriage units as defined in Section 1107A.3.C and regulated only by the Department of Housing and Community Development as referenced in Section 1.8.2.1.2.*

Multistory dwelling units shall comply with Section 1102A.3.

SECTION 1105A
GARAGES, CARPORTS AND PARKING FACILITIES

1105A.1 General. *Garages, carports and other parking facilities, which are accessory to covered multifamily dwelling units, shall be accessible as required in Section 1109A.*

SECTION 1106A
SITE AND BUILDING CHARACTERISTICS

1106A.1 General. *Covered multifamily dwellings with elevators shall be designed and constructed to provide at least one accessible entrance on an accessible route, regardless of terrain or unusual characteristics of the site. Covered multifamily dwellings without elevators shall be designed and constructed to provide at least one accessible entrance on an accessible route unless terrain or unusual characteristics of the site prevent an accessible route based on the conditions listed below:*

1. ***Accessible Entrance.*** *Regardless of site considerations described in Section 1150A, an accessible entrance on an accessible route is required when there is an elevator connecting the parking area with the dwelling units on a ground floor. (In this case, those dwelling units on the ground floor served by an elevator, and at least one of each type of public- and common-use areas, would be subject to these requirements.)*

2. ***Elevator Building.*** *When a building elevator or elevators are provided as a means of access to dwelling units other than dwelling units on a ground floor (see Section 1104A.2), the building is an elevator building. All dwelling units become covered multifamily dwellings in that building. The elevator in that building must provide accessibility to all dwelling units in the building, regardless of the slope of the natural terrain. For multistory dwelling units in buildings with one or more elevators, see Section 1102A.3.2.*

   Note: *Where a building elevator is provided only as means of creating an accessible route to covered multifamily dwelling units on a ground floor, the building is not considered to be an elevator building, only dwelling units located on the ground floor shall be required to comply with this chapter.*

3. ***Elevated walkway.*** *When an elevated walkway is planned between a building entrance and a vehicular or pedestrian arrival point, and the planned walkway has a slope no greater than 10 percent (1 unit vertical in 10 units horizontal), the floor being served by the elevated walkway becomes a ground floor and accessibility to all dwellings on that ground floor is required.*

   Note: *Since the planned walkway meets the 10 percent slope criterion, it is required to provide an accessible route to the entrance, and the slope of the walkway must be reduced to 1 unit vertical in 12 units horizontal (8.33 percent slope) maximum.*

1106A.2 Site impracticality. *For tests to determine site impracticality due to terrain considerations in nonelevator buildings, see Section 1150A.*

SECTION 1107A
DEFINITIONS

For the purpose of this chapter, ~~certain terms are defined as follows~~ the following terms are defined in Chapter 2.

~~1107A.1-A~~

ACCESSIBLE *~~for covered multifamily dwellings is the public or common-use areas of the building that can be approached, entered and used by persons with disabilities.~~*

~~1107A.1-A~~

ACCESSIBLE ROUTE *~~is a continuous and unobstructed path connecting all accessible elements and spaces in a building or within a site that can be negotiated by a person with a disability using a wheelchair, and that is also safe for and usable by persons with other disabilities. Interior accessible routes may include corridors, hallways, floors, ramps, elevators and lifts. Exterior accessible routes may include parking access aisles, curb ramps, crosswalks at vehicular ways, walks, ramps and lifts.~~*

ACCESSIBILITY *~~is the combination of various elements in a building or area which allows access, circulation and the full use of the building and facilities by persons with disabilities.~~*

ADAPTABLE DWELLING UNIT *~~is an accessible dwelling unit within a covered multifamily building as designed with elements and spaces allowing the dwelling unit to be adapted or adjusted to accommodate the user. See Division IV.~~*

ASSISTIVE DEVICE *~~is an aid, tool or instrument used by persons with disabilities to assist in activities of daily living.~~*

AUTOMATIC DOOR *~~is a door equipped with a power-operated mechanism and controls that open and close the door automatically upon receipt of a momentary actuating signal. The switch that begins the automatic cycle may be a photoelectric device, floor mat or manual switch.~~*

~~1107A.2-B~~

BATHROOM *~~is, for the purposes of this chapter, a room which includes a water closet (toilet), lavatory (sink), and a bathtub and/or a shower. It does not include single-fixture facilities or those with only a water closet and lavatory. It does include a compartmented bathroom. A compartmented bathroom is one in which the fixtures are distributed among interconnected rooms. A compartmented bathroom is considered a single unit and is subject to the requirements of this chapter.~~*

BUILDING ENTRANCE ON AN ACCESSIBLE ROUTE *~~is an accessible entrance to a building that is connected by an accessible route to public transportation stops, to parking or passenger loading zones, or to public streets or sidewalks, if available.~~*

~~1107A.3-C~~

CARRIAGE UNIT *~~is a dwelling unit with living space on one or more floors immediately above a Group U, private garage or garages. The footprint of the garage or garages is used as the footprint for the remaining floor or floors of the units above and the garage level contains no habitable space.~~*
~~Note:~~ *~~Dwelling units located over a common garage shall not be considered carriage units.~~*

COMMON USE AREAS *~~are private use areas within multifamily residential facilities where the use of these areas is limited exclusively to owners, residents and their guests. The areas may be defined as rooms or spaces or elements inside or outside of a building.~~*

COVERED MULTIFAMILY DWELLINGS *~~are dwelling units in buildings consisting of 3 or more dwelling units or 4 or more condominium units. Covered multifamily dwellings include dwelling units listed in Section 1102A.1. Dwelling units within a single structure separated by firewalls do not constitute separate buildings.~~*
~~Note:~~ *~~For buildings or complexes containing publicly funded dwelling units, see Chapter 11B, Section 1111B.5 for provisions of the Division of the State Architect-Access Compliance (DSA-AC).~~*

CROSS SLOPE *~~is the slope that is perpendicular to the direction of travel.~~*

CURB CUT *is an interruption of a curb at a pedestrian way, which separates surfaces that are substantially at the same elevation.*

CURB RAMP *is a sloping pedestrian way, intended for pedestrian traffic, which provides access between a walk or sidewalk and a surface located above or below an adjacent curb face.*

1107A.4-D

DETECTABLE WARNING *is a standardized surface or feature built into or applied to walking surfaces or other elements to warn visually impaired persons of hazards in the path of travel. Only approved DSA-AC detectable warning products and directional surfaces shall be installed as provided in the CCR, Title 24, Part 1, Articles 2, 3 and 4. Refer to CCR, Title 24, Part 12, Chapter 12-11A and B for building and facility access specifications for product approval for detectable warning products and directional surfaces.*

Note: *Detectable warning products and directional surfaces installed after January 1, 2001, shall be evaluated by an independent entity, selected by the Department of General Services, Division of the State Architect - Access Compliance, for all occupancies, including transportation and other outdoor environments, except that when products and surfaces are for use in residential housing, evaluation shall be in consultation with the Department of Housing and Community Development. See Government Code Section 4460.*

DWELLING UNIT *is a single unit of residence for a family of one or more persons. Examples of dwelling units covered by this chapter include condominiums, an apartment unit within an apartment building, and other types of dwellings in which sleeping accommodations are provided but toileting or cooking facilities are shared by occupants of more than one room or portion of the dwelling. Examples of the latter include dormitory rooms and sleeping accommodations in shelters intended for occupancy as residences for homeless persons.*

1107A.5-E

EQUIVALENT FACILITATION *is an alternate means of complying with the literal requirements of these standards and specifications that provides access consistent with the purpose of these standards and specifications.*
Notes:
1. See Section 1.8.1, Purpose.
2. In determining equivalent facilitation, consideration shall be given to means that provide for the maximum independence of persons with disabilities while presenting the least risk of harm, injury or other hazard to such persons or others.

1107A.6-F

FACILITY (or FACILITIES) *is a building, structure, room, site, complex or any portion thereof, that is built, altered, improved or developed to serve a particular purpose.*

1107A.7-G

GRAB BAR *is a bar for the purpose of being grasped by the hand for support.*

GROUND FLOOR *is the floor of a building with a building entrance on an accessible route. A building may have one or more ground floors.*

1107A.8-H *(No definitions)*

1107A.9-I

INDEPENDENT ENTITY. *See Chapter 2, Section 202.*

INTERNATIONAL SYMBOL OF ACCESSIBILITY *is that symbol adopted by Rehabilitation International's 11th World Congress for the purpose of indicating that buildings and facilities are accessible to persons with disabilities. See Chapter 11A, Figure 11A-1A.*

1107A.10-J *(No definitions)*

1107A.11-K

KICK PLATE *~~is an abrasion-resistant plate affixed to the bottom portion of a door to prevent a trap condition and protect its surface~~.*

~~1107A.12-L~~

LEVEL AREA *~~is a specified surface that does not have a slope in any direction exceeding 1/4 inch (6.4 mm) in 1 foot (305 mm) from the horizontal (2.083 percent gradient)~~.*

LIFT, PLATFORM (WHEELCHAIR). *~~See "Platform (Wheelchair) Lift."~~*

~~1107A.13-M~~

MARKED CROSSING *~~is a crosswalk or other identified marked path intended for pedestrian use in crossing a vehicular way~~.*

MULTISTORY DWELLING UNIT *~~is a dwelling unit with finished living space located on one floor and the floor or floors immediately above or below it~~.*

~~1107A.14-N~~

NEWLY CONSTRUCTED *~~is a building that has never before been used or occupied for any purpose~~.*

NOSE, NOSING *~~is that portion of a tread projecting beyond the face of the riser immediately below.~~*

~~1107A.15-O~~

OPEN RISER *~~is the airspace between a tread projecting beyond the face of the riser immediately below~~.*

~~1107A.16-P~~

PASSAGE DOOR *~~is a door other than an exit door through which persons may traverse~~.*

PEDESTRIAN *~~is an individual who moves within walking areas with or without the use of walking-assistive devices such as crutches, leg braces, wheelchairs, etc~~.*

PEDESTRIAN RAMP *~~is a sloping accessible route intended for pedestrian traffic and is differentiated from a curb ramp~~.*

PEDESTRIAN WAY *~~is a route by which a pedestrian may pass~~.*

PERSONS WITH DISABILITIES *~~, for purposes of this chapter, "persons with disabilities" includes, but is not limited to, any physical or mental intellectual disability as defined in Government Code Section 12926~~.*

PLATFORM (WHEELCHAIR) LIFT *~~is a hoisting and lowering mechanism equipped with a car or platform, or support, which serves two landings of a building or structure and is designed to carry a passenger or passengers and/or luggage or other material a vertical distance as may be allowed by Section 1124A.11~~.*

POWDER ROOM *~~is a room containing a water closet (toilet) and lavatory (sink), and which is not defined as a bathroom in Section 1107A.2-B~~.*

PRIMARY ENTRY *~~is the principal entrance through which most people enter the building, as designated by the building official~~.*

PRIMARY ENTRY LEVEL *~~is the floor or level of the building on which the primary entry is located~~.*

~~PUBLIC ACCOMMODATION.~~ *~~See Chapter 2, Section 202~~.*

PUBLIC USE AREAS *~~means interior or exterior rooms or spaces of a building that are made available to the general public and does not include Common Use Areas as defined in Section 1107A.3-C. Public Use Areas may be provided at a building that is privately or publicly owned~~.*

~~1107A.17-Q~~ *~~(No definitions)~~*

~~***1107A.18-R***~~

RAMP ~~*See "Pedestrian ramp," Section 1107A.16-P*~~.

RISER ~~*is the vertical distance from the top of a tread to the top of the next higher tread*~~.

~~***1107A.19-S***~~

~~***SIDEWALK.*** *See "Sidewalk," Chapter 2, Section 202.*~~

SLEEPING ACCOMMODATIONS ~~*are rooms in which people may sleep; for example, dormitory and hotel or motel guest rooms or suites*~~.

SLOPE. ~~*is the relative steepness of the land between two points and is calculated as follows:*~~
~~*The horizontal distance and elevation change between the two points (e.g., an entrance and a passenger loading zone). The difference in elevation is divided by the distance and the resulting fraction is multiplied by 100 to obtain the percentage of slope.*~~
~~*For example: if a principal entrance is 10 feet (3048 mm) from a passenger loading zone, and the principal entrance is raised 1 foot (305 mm) higher than the passenger loading zone, then the slope is 1/10 100 = 10 percent.*~~

~~***1107A.20-T***~~

TRANSIENT LODGING ~~*is a building, facility or portion thereof, available to the public as an inn, hotel, motel, timeshare or place where one or more dwelling units or sleeping accommodations are provided for transient guests, excluding inpatient medical care facilities and lodging houses with 5 or less guest rooms. Transient lodging may include but is not limited to, resorts, group homes, and dormitories.*~~

TREAD ~~*is the horizontal member of a step*~~.

~~***1107A.21-U*** *(No definitions)*~~

~~***1107A.22-V***~~

VEHICULAR OR PEDESTRIAN ARRIVAL POINTS ~~*are public or resident parking areas, public transportationstops, passenger loading zones, and public streets or sidewalks.*~~

~~***1107A.23-W***~~

WALK. ~~*is a surfaced pedestrian way not located contiguous to a street used by the public. (See Chapter 2, Section 202 definition for "Sidewalk.")*~~

WHEELCHAIR. ~~*See "Wheelchair," Chapter 2, Section 202.*~~

~~***1107A.24-X*** *(No definitions)*~~

~~***1107A.24 25-Y*** *(No definitions)*~~

~~***1107A.26-Z*** *(No definitions)*~~

Division II — EXTERIOR FACILITIES

Division II Table of Contents

Section 1108A General Requirements for Accessible Parking and Exterior Routes of Travel
Section 1109A Parking Facilities
Section 1110A Exterior Routes of Travel
Section 1111A Changes in Level on Accessible Routes
Section 1112A Curb Ramps on Accessible Routes
Section 1113A Walks and Sidewalks on an Accessible Route
Section 1114A Exterior Ramps and Landings on Accessible Routes
Section 1115A Exterior Stairways
Section 1116A Hazards on Accessible Routes

SECTION 1108A
GENERAL REQUIREMENTS FOR ACCESSIBLE PARKING AND EXTERIOR ROUTES OF TRAVEL

Notes:

1. *In addition to provisions of this division, exterior routes of travel that provide access to, or egress from, buildings for persons with disabilities shall also comply with Chapter 10.*

2. *Public use areas, public accommodations, and public housing ~~which is publicly funded~~ as defined in Chapter 2 of this code are subject to provisions of the Division of the State Architect (DSA-AC) and are referenced in Section 1.9.1.1.*

SECTION 1109A
PARKING FACILITIES

1109A.1 Accessible parking required. *Each parking facility provided for covered multifamily dwellings and facilities (e.g., swimming pools, club houses, recreation areas and laundry rooms) that serve covered multifamily dwellings shall provide accessible parking as required by this section.*

1109A.2 Parking facilities. *Parking facilities shall include, but not be limited to, the following:*

1. Garages
2. Private garages
3. Carports
4. Off-street parking (parking lots/spaces)

1109A.2.1 Private garages. *Private garages accessory to covered multifamily dwelling units, shall be accessible as required in Section 1109A. Private garages include individual garages and multiple individual garages grouped together.*

> ***Exception:*** *An attached private garage directly serving a single covered multifamily dwelling unit providing at least one of the following options:*
>
> *1. A door leading directly from the covered dwelling unit which immediately enters the garage. The door shall comply on both sides with Sections 1132A.3 through 1132A.9.*
> *2. An accessible route of travel from the covered dwelling unit to an exterior door entering the garage. See Section 1132A.1 for requirements at both exit doors.*
> *3. An accessible route of travel from the dwelling unit's primary entry door to the vehicular entrance at the garage. See Section 1132A.1 for requirements at the primary entry door.*

1109A.3 Required accessible parking spaces.
(See Part 1 of this document for proposed amendment to this section)

1109A.4 Assigned accessible parking spaces. *When assigned parking spaces are provided for a resident or a group of residents, at least 2 percent of the assigned parking spaces serving covered multifamily dwelling units shall be accessible in each type of parking facility. At least one space of each type of parking facility shall be made accessible even if the total number exceeds 2 percent. When assigned parking is provided, signage as required by Section 1109A.8.8 shall not be required.*

1109A.5 Unassigned and visitor parking spaces. *When parking is provided for covered multifamily dwellings and is not assigned to a resident or a group of residents at least 5 percent of the parking spaces shall be accessible and provide access to grade-level entrances of covered multifamily dwellings and facilities (e.g., swimming pools, club houses, recreation areas, and laundry rooms) that serve covered multifamily dwellings. Accessible parking spaces shall be provided with signage as required by Section 1109A.8.8. Such signage shall not be blocked from view by a vehicle parked in the space.*

1109A.6 Requests for accessible parking spaces. *When assigned parking is provided, designated accessible parking for the dwelling unit shall be provided on request of residents with disabilities on the same terms and with the full range of choices (e.g., off-street parking, carport or garage) that are available for other residents.*

1109A.7 Location of accessible parking spaces.
(See Part 1 of this document for proposed amendment to this section)

1109A.8 Design and construction. *Accessible parking required by this section shall be designed and constructed in accordance with Section 1109A.*

1109A.8.1 Vertical clearances.
(See Part 1 of this document for proposed amendment to this section)

1109A.8.2 Arrangement of parking spaces. *Parking spaces shall be arranged to comply with the following:*

1. In each parking area, a bumper or curb shall be provided and located to prevent encroachment of cars over the required width of walkways.
2. Ramps, including curb ramps, shall not encroach into any accessible parking space or the adjacent loading and unloading access aisle.

1109A.8.3 Slope of accessible parking spaces and access aisles. *Surface slopes of accessible parking spaces and access aisles shall be the minimum possible and shall not exceed 1/4 inch (6.35 mm) per foot (2.083-percent gradient) in any direction.*

1109A.8.4 Accessible parking space size. *Accessible parking spaces shall comply with Sections 1109A.8.5 and 1109A.8.6.*

1109A.8.5 Accessible single parking space. *Where accessible single spaces are provided, they shall be constructed in accordance with the following:*

1. Single spaces shall be 14 feet (4267 mm) wide and lined to provide a 9-foot (2743 mm) wide parking area and a 5-foot (1524 mm) wide loading and unloading access aisle on the passenger side of the vehicle (see Figure 11A-2B) with the vehicle parked in the forward position.

2. When more than one space is provided, two 9-foot (2743 mm) wide parking spaces may be lined on each side of a 5-foot (1524 mm) wide loading and unloading access aisle (see Figures 11A-2A and 11A-2C).

3. The minimum length of each parking space shall be 18 feet (5486 mm).

4. The loading and unloading access aisle shall be marked by a border painted blue. Within the blue border, hatched lines a maximum of 36 inches (914 mm) on center shall be painted a color contrasting with the parking surface, preferably blue or white. The words "NO PARKING" shall be painted on the ground within each 5-foot (1524 mm) wide loading and unloading access aisle. This notice shall be painted in white letters no less than 12 inches (305 mm) high and located so that it is visible to traffic enforcement officials.

Note: *See Figures 11A-2A, 11A-2B and 11A-2C.*

1109A.8.6 Van accessible parking space.
(See Part 1 of this document for proposed amendment to this section.)

1109A.8.7 Adjacent parking. *Parking spaces adjacent to accessible parking spaces shall not be considered as loading and unloading access aisles.*

1109A.8.8 Parking signage. *Each accessible parking space reserved for persons with disabilities shall be identified by a reflective sign permanently posted immediately adjacent to and visible from each stall or space*

consisting of the "International Symbol of Accessibility" in white on a dark blue background. The sign shall not be smaller than 70 square inches (4516 mm^2) in area and, when in a path of travel, shall be posted at a minimum height of 80 inches (2032 mm) from the bottom of the sign to the parking space finished grade. Signs may also be centered on the wall at the interior end of the parking space at a minimum height of 36 inches (914 mm) from the parking space finished grade, ground or sidewalk. Van accessible spaces shall comply with Section 1109A.8.6 and shall have an additional sign or additional language stating "Van Accessible" below the symbol of accessibility.

> ***Note:*** *When assigned resident parking is provided, signage is not required except for unassigned or visitor parking spaces.*

An additional sign shall also be posted in a conspicuous place at each entrance to off-street parking facilities or immediately adjacent to and visible from each accessible stall or space. The sign shall not be less than 17 inches (432 mm) by 22 inches (559 mm) in size with lettering not less than 1 inch (25.4 mm) in height, and shall clearly and conspicuously state the following:

> *"Unauthorized vehicles parked in designated accessible spaces not displaying distinguishing placards or special license plates issued for persons with disabilities will be towed away at the owner's expense. Towed vehicles may be reclaimed at _____ or by telephoning_____."*

Blank spaces are to be filled in with appropriate information as a permanent part of the sign.
In addition to the above requirements, the surface of each accessible parking space shall have a surface identification duplicating either of the following schemes:

> *1. By outlining or painting the stall or space in blue and outlining on the ground in the stall or space in white or suitable contrasting color the "International Symbol of Accessibility"; or,*
>
> *2. By outlining the "International Symbol of Accessibility" in white on blue background. The "International Symbol of Accessibility" shall be located so that it is visible to a traffic enforcement officer when a vehicle is properly parked in the space and shall be 36 inches high by 36 inches wide (914 mm by 914 mm).*

Note: *See Figures 11A-2A, 11A-2B and 11A-2C.*

SECTION 1110A
EXTERIOR ROUTES OF TRAVEL

1110A.1 Exterior accessible route. *When a building or portion of a building is required to be accessible or adaptable, an accessible route shall be provided to all portions of the building, accessible building entrances and between the building and the public way. The accessible route shall be the most practical direct route and to the maximum extent feasible, coincide with the route for the general public and building residents.*

Exterior accessible routes shall be provided as follows:

1. Where more than one route of travel is provided, all routes shall be accessible.
2. At least one accessible route within the boundary of the site shall be provided from public transportation stops, accessible parking and accessible passenger loading and unloading zones, and public streets or sidewalks to the accessible building entrance they serve.
3. At least one accessible route shall connect accessible buildings, facilities, elements and spaces that are on the same site. Accessible routes shall be provided between accessible buildings and accessible site facilities when more than one building or facility is located on a site.
4. At least one accessible route shall connect accessible building or facility entrances with all accessible spaces, elements, and covered multifamily dwelling units.
5. An accessible route shall connect at least one accessible entrance of each covered multifamily dwelling unit with exterior spaces and facilities that serve the dwelling unit.
6. Where elevators are provided for vertical access, all elevators shall be accessible. See Section 1124A.

> ***Note:*** *If the slope of the finished grade between covered multifamily dwellings and a public use or common use facility (including parking) exceeds 1 unit vertical in 12 units horizontal (8.33-percent slope), or where other physical barriers (natural or artificial) or legal restrictions, all of which are outside the control of the owner, prevent the installation of an accessible route, an acceptable alternative is to provide access by a vehicular route, provided:*

1. There is accessible parking on an accessible route for at least 2 percent of the covered multifamily dwelling units, and

2. Necessary site provisions such as parking spaces and curb ramps are provided at the public use or common use facility.

***1110A.2 Signs**. At every primary public entrance and at every major junction where the accessible route diverges from the circulation path along or leading to an accessible route, entrance or facility, there shall be a sign displaying the "International Symbol of Accessibility." Signs shall indicate the direction to accessible building entrances and facilities and shall comply with the requirements found in Section 1143A.2 .*

1110A.3 Flooring.
(See Part 1 of this document for proposed amendment to this section.)

***1110A.3.1 Recessed doormats.** Recessed doormats shall be adequately anchored to prevent interference with wheelchair traffic.*

1110A.4 Exterior accessible routes over 200 feet (60 960 mm).
(See Part 1 of this document for proposed adoption of this section)

SECTION 1111A
CHANGES IN LEVEL ON ACCESSIBLE ROUTES

***1111A.1 Changes in level not exceeding 1/2 inch.** Abrupt changes in level along any accessible route shall not exceed ½ inch (12.7 mm). When changes in level do occur, they shall be beveled with a slope no greater than 1 unit vertical in 2 units horizontal (50-percent slope). Changes in level not exceeding 1/4 inch (6.35 mm) may be vertical.*

***1111A.2 Changes greater than 1/2 inch.** Changes in level greater than 1/2 inch (12.7 mm) shall be made by means of a sloped surface not greater than 1 unit vertical in 20 units horizontal (5-percent slope), or a curb ramp, ramp, elevator or platform (wheelchair) lift. Stairs shall not be part of an accessible route. When stairs are located along or adjacent to an accessible route they shall comply with Section 1115A for exterior stairways.*

SECTION 1112A
CURB RAMPS ON ACCESSIBLE ROUTES

***1112A.1 General.** Curb ramps within the boundary of the site shall be constructed at each corner of street intersections and where a pedestrian way crosses a curb. The preferred and recommended location for curb ramps is in the center of the crosswalk of each street corner. Where it is necessary to locate a curb ramp in the center of the curb return, the street surfaces shall be marked to identify pedestrian crosswalks, and the lower end of the curb ramp shall terminate within such crosswalk areas. Curb ramps do not require handrails.*

***1112A.2 Obstructions.** Curb ramps shall be located or protected to prevent obstruction by parked cars. Built-up curb ramps shall be located so that they do not project into vehicular traffic lanes, parking spaces, or the adjacent loading and unloading access aisle.*

***1112A.3 Width of curb ramps.** Curb ramps shall be a minimum of 48 inches (1219 mm) in width.*

***1112A.4 Diagonal curb ramps**. If diagonal (or corner-type) curb ramps have returned curbs or other well-defined edges, such edges shall be parallel to the direction of pedestrian flow. The bottom of diagonal curb ramps shall have a 48-inch (1219 mm) minimum clear space as shown in Figures 11A-3A through 11A-3M. If diagonal curb ramps are provided at marked crossings, the 48-inch (1219 mm) clear space shall be within the markings (see Figures 11A-3A through 11A-3M). If diagonal curb ramps have flared sides, they shall also have at least a 24-inch-long (610 mm) segment of straight curb located on each side of the curb ramp and within the marked crossing. See Figures 11A-3A through 11A-3M.*

***1112A.5 Slope of curb ramps.** The slope of curb ramps shall not exceed 1 unit vertical to 12 units horizontal (8.33-percent slope) and shall lie, generally, in a single sloped plane. Transitions from ramps to walks, gutters or streets shall be flush and free of abrupt changes. Maximum slopes of adjoining gutters, road surface immediately adjacent to the curb ramp, or accessible route shall not exceed 1 unit vertical to 20 units horizontal (5-percent slope) within 4 feet (1219 mm) of the top and bottom of the curb ramp.*

If a curb ramp is located where pedestrians must walk across the ramp, then it shall have flared sides; the maximum slope of the flare shall be 1 unit vertical in 10 units horizontal (10-percent slope). Curb ramps with returned curbs may be used where pedestrians would not normally walk across the ramp.
See Figures 11A-3A through 11A-3M.

1112A.6 Level landing. *A level landing 48 inches (1219 mm) deep shall be provided at the upper end of each curb ramp over its full width to permit safe egress from the ramp surface, or the slope of the fanned or flared sides of the curb ramp, shall not exceed 1 unit vertical to 12 units horizontal (8.33-percent slope).*

1112A.7 Finish. *The surface of each curb ramp and its flared sides shall be stable, firm and slip-resistant and shall be of contrasting finish from that of the adjacent sidewalk.*

1112A.8 Border. *All curb ramps shall have a grooved border 12 inches (305 mm) wide at the level surface of the sidewalk along the top and each side approximately 3/4 inch (19 mm) on center. All curb ramps constructed between the face of the curb and the street shall have a grooved border at the level surface of the sidewalk. See Figures 11A-3A through 11A-3K.*

1112A.9 Detectable warnings.
See Part 1 of this document for proposed amendment of this section)

SECTION 1113A
WALKS AND SIDEWALKS ON AN ACCESSIBLE ROUTE

1113A.1 Width and continuous surface. *Walks and sidewalks subject to this chapter shall have a continuous common surface, not interrupted by steps or by abrupt changes in level exceeding 1/2 inch (12.7 mm). (See Section 1111A).*

1113A.1.1 Width. *Walks and sidewalks shall be a minimum of 48 inches (1219 mm) in width, except that walks serving an individual dwelling unit in covered multifamily buildings may be reduced to 36 inches (914 mm) in clear width except at doors.*

1113A.1.2 Surfaces. *Surfaces shall be slip-resistant as follows:*

1. *Surfaces with a slope of less than 6 percent gradient shall be at least as slip-resistant as that described as a medium salted finish.*

2. *Surfaces with a slope of 6 percent or greater gradient shall be slip-resistant.*

1113A.1.3 Surface cross slopes. *Surface cross slopes shall not exceed 1/4 inch (6.35 mm) per foot (2.083-percent slope) except when the enforcing agency finds that due to local conditions it creates an unreasonable hardship, the cross slope may be increased to a maximum of 1/2 inch (12.7 mm) per foot (4.2-percent slope) for distances not to exceed 20 feet (6096 mm).*

1113A.2 Walks with continuous gradients. *All walks on an accessible route with continuous gradients shall have level areas at least 60 inches (1524 mm) in length at intervals of at least every 400 feet (122 m).*

1113A.3 Five percent gradient. *When the slope in the direction of travel of any walk on an accessible route exceeds 1 unit vertical in 20 units horizontal (5-percent slope), it shall comply with the ramp provisions of Section 1114A.*

1113A.4 Level areas. *Walks on an accessible route shall be provided with a level area not less than 60 inches by 60 inches (1524 mm by 1524 mm) at a door or gate that swings toward the walk, and not less than 48 inches wide by 44 inches (1219 mm by 1118 mm) deep at a door or gate that swings away from the walk. See Section 1126A.3.2 for strike edge maneuvering space at doors or gate.*

1113A.5 Smooth surface. *The bottom 10 inches (254 mm) of all doors and/or gates except automatic and sliding doors or gates shall have a smooth, uninterrupted surface to allow the door or gate to be opened by a wheelchair footrest without creating a trap or hazardous condition. Where narrow frame doors are used, a 10-inch (254 mm) high smooth panel shall be installed on the push side of the door, which will allow the door to be opened by a wheelchair footrest without creating a trap or hazardous condition.*

1113A.6 Gratings. *Walks, sidewalks and pedestrian ways on an accessible route shall be free of gratings whenever possible. Gratings located in the surface of any of these areas, grid openings in gratings shall be limited to 1/2 inch (12.7 mm) in the direction of traffic flow.*

Exceptions:

1.Where the enforcement agency determines that compliance with this section would create an unreasonable hardship, an exception may be granted when equivalent facilitation is provided.

2.This section shall not apply in those conditions where, due to legal or physical constraints, all or portions of the site of the project will not allow compliance with these building standards or equivalent facilitation on all or portions of one site without creating an unreasonable hardship.

SECTION 1114A
EXTERIOR RAMPS AND LANDINGS ON ACCESSIBLE ROUTES

1114A.1 Width. *The width of ramps shall be consistent with the requirements for exits in Chapter 10 of this code, but in no case shall the ramp width be less than the following:*

1. *Ramps serving accessible entrances to covered multifamily buildings where the ramp is the only exit discharge path and serves an occupant load of 300 or more shall have a minimum clear width of 60 inches (1524 mm).*

2. *Ramps serving accessible entrances of covered multifamily dwellings with an occupant load of 10 or less may be 36 inches (914 mm) in clear width.*

3. *All other ramps shall have a minimum clear width of 48 inches (1219 mm).*

4. *Handrails, curbs, wheel guides and/or appurtenances shall not project into the required clear width of a ramp.*

   Note: *See Section 1114A.6.2.4 for handrail projections.*

1114A.2 Slope. *The maximum slope of ramps on an accessible route shall be no greater than 1 unit vertical in 12 units horizontal (8.33-percent slope). Transitions from ramps to walks, gutters or streets shall be flush and free of abrupt changes.*

Exception: *Ramps serving decks, patios or balconies as specified in Section 1132A.4.*

1114A.2.1 Cross slope*. The cross slope of ramp surfaces shall be no greater than 1/4 inch (6.35 mm) per foot (2.083-percent slope).*

1114A.3 Outdoor ramps. *Outdoor ramps, ramp landings and their approaches shall be designed so that water will not accumulate on the walking surface.*

1114A.4 Landings. *Ramp landings shall be level and comply with this section.*

1114A.4.1 Location of landings. *Landings shall be provided at the top and bottom of each ramp. Intermediate landings shall be provided at intervals not exceeding 30 inches (762 mm) of vertical rise and at each change of direction. Landings are not considered in determining the maximum horizontal distance of each ramp.*

Note: *Examples of ramp dimensions are:*

SLOPE (GRADING %)	***MAXIMUM RISE (Inches)***	***MAXIMUM HORIZONTAL PROJECTION (Feet)***
	(x 25.4 for mm)	***(x 304.8~~)~~ for mm)***
1:12 (8.33%)	*30*	*30*
1:15 (6.67%)	*30*	*37.5*
1:16 (6.25%)	*30*	*40*
1:20 (5.00%)	*30*	*50*

1114A.4.2 Size of top landings*. Top landings shall not be less than 60 inches (1524 mm) wide. Top landings shall have a minimum length of not less than 60 inches (1524 mm) in the direction of the ramp run. See Section 1126A.3 for maneuvering clearances at doors. (See Figure 11A-6C).*

1114A.4.3 Landing width. *The minimum width of bottom and intermediate landings shall not be less than the width of the ramp.*

1114A.4.4 Encroachment of doors. *Doors in any position shall not reduce the minimum dimension of the landing to less than 42 inches (1067 mm) and shall not reduce the required width by more than 3 inches (76.2 mm) when fully open. (See Figure 11A-6D).*

1114A.4.5 Strike edge extension. *The width of the landing shall comply with Section 1126A.3 for strike edge extension and maneuvering space at doors.*

1114A.4.6 Change of direction. *Intermediate and bottom landings at a change of direction in excess of 30 degrees shall have a length in the direction of ramp run of not less than 72 inches (1829 mm). (See Figure~~s~~ 11A-6C).*

1114A.4.7 Other intermediate landings. *Other intermediate landings shall have a dimension in the direction of ramp run of not less than 60 inches (1524 mm). (See Figure ~~11-A6C~~ 11A-6C).*

1114A.5 Ramp height. *Ramps more than 30 inches (762 mm) above the adjacent floor or ground and open on one or both sides shall be provided with guardrails as required by Section 1013. Guardrails shall be continuous from the top of the ramp to the bottom of the ramp.*

1114A.6 Ramp handrails.

1114A.6.1 Where required. *Handrails shall be provided at each side of ramps when the slope exceeds 1 unit vertical in 20 units horizontal (5-percent slope). Handrails on all ramps shall be continuous.*

Exceptions:

1.Curb ramps.
2.Ramps that serve an individual dwelling unit may have one handrail, except that ramps open on one or both sides shall have handrails provided on the open side or sides.
3.Ramps at exterior door landings with less than 6 inches (152 mm) rise or less than 72 inches (1829 mm) in length.

1114A.6.2 Handrail configuration.

1114A.6.2.1 Handrail heights*. The top of handrails shall be 34 to 38 inches (864 to 965 mm) above the ramp surface.*

1114A.6.2.2 Handrail ends. *Handrail ends shall be returned.*

1114A.6.2.3 Handrail extension. *Handrails shall extend a minimum of 12 inches (305 mm) beyond the top and bottom of the ramp. Where the extension creates a hazard, the termination of the extension shall be rounded or returned smoothly to floor, wall or post. (See Figure 11A-5A).*

1114A.6.2.4 Handrail projections. *Handrails projecting from a wall shall have a space of 1½ inches (38.1 mm) between the wall and the handrail. Handrails shall not reduce the required minimum clear width of ramps.*

Handrails may be located in a recess if the recess is a maximum of 3 inches (76.2 mm) deep and extends at least 18 inches (457 mm) above the top of the rail. Any wall or other surface adjacent to the handrail shall be free of sharp or abrasive elements. (See Figure11A-6B).

1114A.6.2.5 Handrail grips.
(See Part 1 of this document for proposed amendment of this section)

1114A.7 Edge protection. *Ramps and ramp landings shall be provided with a continuous and uninterrupted barrier on each side along the entire length in compliance with Sections 1010.~~9~~ 10 and 1010.~~9~~ 10.1. (See Figure 11A-5A.)*

> ***Note:*** *Extended floors or ground surfaces, as permitted in Section 1010.~~9~~ 10.2, are not allowed for ramps and ramp landings part of an accessible route.*

SECTION 1115A
EXTERIOR STAIRWAYS

1115A.1 General. *Exterior stairways serving buildings on a site containing covered multifamily dwelling units shall comply with this section.*

1115A.2 Open risers. *Open risers are not permitted on exterior stairways.*

> ***Exceptions:***
> *1. An opening of not more than ½ inch (12.7 mm) may be permitted between the base of the riser and the tread.*
> *2. Risers constructed of grating containing openings of not more than ½ inch (12.7 mm) may be permitted.*

1115A.3 Treads. *All tread surfaces shall be slip resistant. Treads shall have smooth, rounded or chamfered exposed edges, and no abrupt edges at the nosing (lower front edge).*

1115A.4 Nosing. *Nosing shall not project more than 1¼ inches (31.8 mm) past the face of the riser below. Risers shall be sloped or the underside of the nosing shall have an angle not more than 30 degrees (0.52 rad) from the vertical. (See Figure 11A-6A).*

1115A.5 Striping for the visually impaired. *Exterior stairs serving buildings on a site containing multifamily dwelling units shall have the upper approach and all treads marked by a stripe providing clear visual contrast.*

The stripe shall be a minimum of 2 inches (50.8 mm) wide to a maximum of 4 inches (101.6 mm) wide placed parallel to, and not more than 1 inch (25.4 mm) from, the nose of the step or upper approach. The stripe shall extend the full width of the step or upper approach and shall be of material that is at least as slip resistant as the other treads of the stair. A painted stripe shall be acceptable.

1115A.6 Exterior stairway handrails.

1115A.6.1 Where required. *Stairways shall have handrails on each side. Intermediate handrails shall be located equidistant from the sides of the stairway and comply with Section 1012.9.*

Exception: *Stairways serving an individual dwelling unit may have one handrail, except that stairways open on one or both sides shall have handrails on the open side or sides.*

1115A.6.2 Handrail configuration.

1115A.6.2.1 Handrail heights. *The top of handrails shall be 34 to 38 inches (864 to 965 mm) above the nosing of the treads.*

1115A.6.2.2 Handrail ends. *Ends shall be returned or shall terminate in newel posts or safety terminals.*

1115A.6.2.3 Handrail extension. *Handrails shall extend a minimum of 12 inches (305 mm) beyond the top nosing and 12 inches (305 mm), plus the tread width, beyond the bottom nosing.*

Where the extension creates a hazard, the termination of the extension shall be rounded or returned smoothly to floor, wall or post. Where the stairs are continuous from landing to landing, the inner rail shall be continuous and need not extend out into the landing. (See Figures 11A-6A and 11A-6E).

1115A.6.2.4 Handrail projections. *Handrails projecting from a wall shall have a space of 1½ inches (38.1 mm) between the wall and the handrail.*

Handrails may be located in a recess if the recess is a maximum of 3 inches (76.2 mm) deep and extends at least 18 inches (457 mm) above the top of the rail. Any wall or other surface adjacent to the handrail shall be free of sharp or abrasive elements. (See Figure 11A-6B).

1115A.6.2.5 Handrail grips.
(See Part 1 of this document for proposed amendment of this section)

SECTION 1116A
HAZARDS ON ACCESSIBLE ROUTES

1116A.1 Warning curbs*.*
(See Part 1 of this document for proposed amendment of this section)

1116A.2 Headroom clearance.
(See Part 1 of this document for proposed amendment of this section)

1116A.3 Overhanging obstructions*. Any obstruction that overhangs a pedestrian way shall be a minimum of 80 inches (2032 mm) above the walking surface as measured from the bottom of the obstruction. (See Figure 11A-1B). Where a guy support is used parallel to a path of travel, including, but not limited to, sidewalks, a guy brace, sidewalk guy or similar device shall be used to prevent an overhanging obstruction (see Section 1116A.2 for required headroom clearance).*

1116A.4 Free-standing signs. *Wherever signs mounted on posts or pylons protrude from the post or pylons and the bottom edge of the sign is at less than 80 inches (2032 mm) above the finished floor or ground level, the edges of such signs shall be rounded or eased and the corners shall have a minimum radius of 0.125 inches (see Section 1116A.2 for required headroom clearance).*

Division III — BUILDING FEATURES

Division III Table of Contents

Section 1117A General Requirements for Accessible Entrances, Exits, Interior Routes of Travel and Facility Accessibility
Section 1118A Egress and Areas of Refuge
Section 1119A Interior Routes of Travel
Section 1120A Interior Accessible Routes
Section 1121A Changes in Level on Accessible Routes
Section 1122A Interior Ramps and Landings on Accessible Routes
Section 1123A Interior Stairways
Section 1124A Elevators and Platform (Wheelchair) Lifts
Section 1125A Hazards on Accessible Routes
Section 1126A Doors
Section 1127A Common Use Facilities

SECTION 1117A
GENERAL REQUIREMENTS FOR ACCESSIBLE ENTRANCES, EXITS, INTERIOR ROUTES OF TRAVEL AND FACILITY ACCESSIBILITY

Note: *In addition to provisions of this division, interior routes of travel that provide access to, or egress from, buildings for persons with disabilities shall also comply with Chapter 10.*

1117A.1 General. *When buildings are required to be accessible, building facilities shall be accessible as provided in this division. Where specific floors of a building are required to be accessible, the requirements of this division shall apply only to the facilities located on accessible floors.*

1117A.2 Primary entrances and exterior exit doors. *All primary entrances and exterior ground floor exit doors to buildings and facilities on accessible routes shall be accessible to persons with disabilities.*

1117A.3 Separate dwelling unit entrances. *When a ground-floor dwelling unit of a building has a separate entrance, each such ground-floor dwelling unit shall be served by an accessible route, except where the terrain or unusual characteristics of the site prohibit an accessible route. (See Section 1150A for site impracticality tests).*

1117A.4 Multiple entrances. *Only one entrance to covered multifamily buildings is required to be accessible to any one ground floor of a building, except in cases where an individual dwelling unit has a separate exterior entrance. Where the building contains clusters of dwelling units with each cluster sharing a different exterior entrance, more than one entrance may be required to be accessible, as determined by analysis of the site. In every case, the accessible entrance shall be on an accessible route to the covered dwelling units it serves.*

SECTION 1118A
EGRESS AND AREAS OF REFUGE

1118A.1 General. *Including but not limited to the requirements contained in this chapter for accessible routes, signage and emergency warning systems in buildings or portions of buildings required to be accessible shall be provided with accessible means of egress as required by Chapter 10. (See Section 1007.)*

SECTION 1119A
INTERIOR ROUTES OF TRAVEL

1119A.1 General. *When a building or portion of a building is required to be accessible or adaptable, an accessible route shall be provided to all portions of the building, accessible building entrances and to covered multifamily dwelling units. The accessible route shall, to the maximum extent feasible, coincide with the route for the general public and other building residents. Accessible routes shall not pass through kitchens, storage rooms, restrooms, closets or other spaces used for similar purposes except within an individual dwelling unit. Accessible routes shall be provided as follows:*

1.Where more than one route of travel is provided, all routes shall be accessible.

2.At least one accessible route shall connect accessible building or facility entrances with all accessible spaces, elements and covered multifamily dwelling units.

3.An accessible route shall connect at least one accessible primary entrance of each covered multifamily dwelling unit with interior and exterior spaces and facilities that serve the unit.

4.Where elevators are provided for vertical access, all elevators shall be accessible.

1119A.2 Flooring.
(See Part 1 of this document for proposed amendment of this section)

1119A.2.1 Recessed doormats. *Recessed doormats shall be adequately anchored to prevent interference with wheelchair traffic.*

SECTION 1120A
INTERIOR ACCESSIBLE ROUTES

Note: *For the purpose of this section, interior accessible routes shall include but not be limited to corridors, hallways, exit balconies and covered or enclosed walkways.*

1120A.1 Widths.
(See Part 1 of this document for proposed amendment of this section)

1120A.2 Interior accessible routes over 200 feet (60 960 mm).
(See Part 1 of this document for proposed amendment of this section)

1120A.3 Changes in elevation. *Interior accessible routes which have changes in elevation shall be transitioned and comply with Sections 1121A or 1122A.*

Exception: *Doors and thresholds as provided in Section 1126A.*

SECTION 1121A
CHANGES IN LEVEL ON ACCESSIBLE ROUTES

1121A.1 Changes in level not exceeding ½ inch*. Abrupt changes in level along any accessible route shall not exceed ½ inch (12.7 mm). When changes in level do occur, they shall be beveled with a slope no greater than 1 unit vertical in 2 units horizontal (50-percent slope). Changes in level not exceeding ¼ inch (6.35 mm) may be vertical.*

1121A.2 Changes greater than ½ inch.
(See Part 1 of this document for proposed amendment of this section)

SECTION 1122A
INTERIOR RAMPS AND LANDINGS ON ACCESSIBLE ROUTES

1122A.1 Width. *The width of ramps shall be consistent with the requirements for exits in Chapter 10 of this code, but in no case shall the ramp width be less than the following:*

1.Ramps serving accessible entrances to covered multifamily buildings where the ramp is the only exit discharge path and serves an occupant load of 300 or more shall have a minimum clear width of 60 inches (1524 mm).

2.Ramps serving accessible entrances to covered multifamily dwellings with an occupant load of 10 or less may be 36 inches (914 mm) in clear width.

3.All other ramps shall have a minimum clear width of 48 inches (1219 mm).

4.Handrails, curbs, wheel guides and/or appurtenances shall not project into the required clear width of a ramp.

Note: *See Section 1122A.5.2.4 for handrail projections.*

1122A.2 Slope. *The maximum slope of ramps on an accessible route shall be no greater than 1 unit vertical in 12 units horizontal (8.33-percent slope).*

1122A.2.1 Cross slope. *The cross slope of ramp surfaces shall not exceed 1/4 inch (6.35 mm) per foot (2.083-percent slope).*

1122A.3 Landings. *Ramp landings shall be level and comply with this section.*

1122A.3.1 Location of landings. *Landings shall be provided at the top and bottom of each ramp. Intermediate landings shall be provided at intervals not exceeding 30 inches (762 mm) of vertical rise and at each change of direction. Landings are not considered in determining the maximum horizontal distance of each ramp.*

Note: *Examples of ramp dimensions are:*

SLOPE (GRADING %)	MAXIMUM RISE (Inches)	MAXIMUM HORIZONTAL PROJECTION (Feet)
	(x 25.4 for mm)	(x 304.8) for mm)
1:12 (8.33%)	30	30
1:15 (6.67%)	30	37.5
1:16 (6.25%)	30	40
1:20 (5.00%)	30	50

***1122A.3.2 Size of top landings**. Top landings shall not be less than 60 inches (1524 mm) wide. Top landings shall have a minimum length of not less than 60 inches (1524 mm) in the direction of the ramp run. See Section 1126A.3 for maneuvering clearances at doors. (See Figure 11A-6C).*

***1122A.3.3 Landing width.** The minimum width of bottom and intermediate landings shall not be less than the width of the ramp.*

***1122A.3.4 Encroachment of doors.** Doors in any position shall not reduce the minimum dimension of the landing to less than 42 inches (1067 mm) and shall not reduce the required width by more than 3 inches (76.2 mm) when fully open. (See Figure 11A-6D).*

***1122A.3.5 Strike edge extension.** The width of the landing shall comply with Section 1126A.3 for maneuvering clearances at doors.*

***1122A.3.6 Change of direction.** Intermediate and bottom landings at a change of direction in excess of 30 degrees shall have a length in the direction of ramp run of not less than 72 inches (1829 mm). (See Figures 11A-6C and 11A-6D).*

***1122A.3.7 Other intermediate landings.** Other intermediate landings shall have a dimension in the direction of ramp run of not less than 60 inches (1524 mm). (See Figure 11A-6C).*

***1122A.4 Ramp height.** Ramps more than 30 inches (762 mm) above the adjacent floor or ground and open on one or both sides shall be provided with a guard as required by Section 1013. Guardrails shall be continuous from the top of the ramp to the bottom of the ramp.*

1122A.5 Ramp handrails.

***1122A.5.1 Where required.** Handrails shall be provided at each side of ramps when the slope exceeds 1 unit vertical in 20 units horizontal (5-percent slope). Handrails on all ramps shall be continuous.*

Exceptions:
1.Curb ramps.

2.Ramps that serve an individual dwelling unit may have one handrail, except that ramps open on one or both sides shall have handrails provided on the open side or sides.

1122A.5.2 Handrail configuration.

***1122A.5.2.1 Handrail heights**. The top of handrails shall be 34 to 38 inches (864 to 965 mm) above the ramp surface.*

***1122A.5.2.2 Handrail ends.** Handrail ends shall be returned.*

***1122A.5.2.3 Handrail extension.** Handrails shall extend a minimum of 12 inches (305 mm) beyond the top and bottom of the ramp. Where the extension creates a hazard, the termination of the extension shall be rounded or returned smoothly to floor, wall or post. (See Figure 11A-5A).*

1122A.5.2.4 Handrail projections. *Handrails projecting from a wall shall have a space of 1½ inches (38.1 mm) between the wall and the handrail.*

Handrails may be located in a recess if the recess is a maximum of 3 inches (76.2 mm) deep and extends at least 18 inches (457 mm) above the top of the rail. Any wall or other surface adjacent to the handrail shall be free of sharp or abrasive elements. (See Figure 11A-6B).

1122A.5.2.5 Handrail grips.
(See Part 1 of this document for proposed amendment of this section)

1122A.6 Edge protection. *Ramps and ramp landings shall be provided with a continuous and uninterrupted barrier on each side along the entire length in compliance with 1010.~~9~~ 10 and 1010.~~9~~ 10.1. (See Figure 11A-5A.)*

> ***Note:*** *Extended floors or ground surfaces, as permitted in Section 1010.~~9~~ 10.2, are not allowed for ramps and ramp landings providing access to, or egress from, buildings or facilities where accessibility is required.*

SECTION 1123A
INTERIOR STAIRWAYS

1123A.1. General. *Interior stairways serving buildings containing covered multifamily dwelling units shall comply with this section.*

1123A.2 Open risers. *Open risers shall not be permitted on interior stairways.*

> ***Exception:*** *Stairways within an individual dwelling unit.*

1123A.3 Treads. *All tread surfaces shall be slip resistant. Treads shall have smooth, rounded or chamfered exposed edges and no abrupt edges at the nosing (lower front edge).*

1123A.4 Nosing. *Nosing shall not project more than 1¼ inches (31.8 mm) past the face of the riser below. Risers shall be sloped or the underside of the nosing shall have an angle not more than 30 degrees (0.52 rad) from the vertical. (See Figure 11A-6A).*

1123A.5 Striping for the visually impaired. *Interior stairs shall have the upper approach and lower tread marked by a stripe providing clear visual contrast.*

> ***Exception:*** *Stairways within an individual dwelling unit.*
> *The stripe shall be a minimum of 2 inches (50.8 mm) wide to a maximum of 4 inches (101.6 mm) wide placed parallel to, and not more than 1 inch (25.4 mm) from, the nose of the step or upper approach. The stripe shall extend the full width of the step or upper approach and shall be of material that is at least as slip resistant as the other treads of the stair. A painted stripe shall be acceptable.*

1123A.6 Interior stairway handrails.

1123A.6.1 Where required. *Stairways shall have handrails on each side. Intermediate handrails shall be located equidistant from the sides of the stairway and comply with Section 1012.9.*

> ***Exception:*** *Stairways serving an individual dwelling unit may have one handrail, except that stairways open on one or both sides shall have handrails on the open side or sides.*

1123A.6.2 Handrail configuration.

1123A.6.2.1 Handrail heights. *The top of handrails shall be 34 to 38 inches (864 to 965 mm) above the nosing of the treads.*

1123A.6.2.2 Handrail ends. *Ends shall be returned or shall terminate in newel posts or safety terminals.*

1123A.6.2.3 Handrail extension. *Handrails shall extend a minimum of 12 inches (305 mm) beyond the top nosing and 12 inches (305 mm), plus the tread width, beyond the bottom nosing. Where the extension creates a hazard, the termination of the extension shall be rounded or returned smoothly to floor, wall or post. Where the stairs are continuous from landing to landing, the inner rail shall be continuous and need not extend out into the landing. (See Figures 11A-6A and 11A-6E).*

> ***Exception:*** *Stairways within an individual dwelling unit.*

1123A.6.2.4 Handrail projections. *Handrails projecting from a wall shall have a space of 1½ inches (38.1 mm) between the wall and the handrail.*

Handrails may be located in a recess if the recess is a maximum of 3 inches (76.2 mm) deep and extends at least 18 inches (457 mm) above the top of the rail. Any wall or other surface adjacent to the handrail shall be free of sharp or abrasive elements. (See Figure 11A-6B).

1123A.6.2.5 Handrail grips. *(See Part 1 of this document for proposed amendment of this section)*

SECTION 1124A
ELEVATORS AND PLATFORM (WHEELCHAIR) LIFTS

1124A.1 General. *Elevators provided in covered multifamily buildings shall be accessible. Elevators required to be accessible shall comply with this chapter, ASME A17.1, Safety Code for Elevators and Escalators, Title 8, of the California Code of Regulations, under "Elevator Safety Orders," and any other applicable safety regulations of other administrative authorities having jurisdiction.*

> ***Exception:*** *Private elevators serving only one dwelling unit.*

1124A.2 Location. *Passenger elevators shall be located on a major accessible route and provisions shall be made to ensure that they remain accessible and usable at all times that the building is occupied.*

1124A.3 Size of cab and control locations.

1124A.3.1 General. *Elevators serving covered multifamily buildings shall be sized to accommodate a wheelchair in accordance with this section.*

> ***Exception:*** *When the enforcing agency determines that compliance with any requirement of this section would create an unreasonable hardship, an exception to the requirement shall be granted when equivalent facilitation is provided, and where it can be demonstrated that a person using a wheelchair can enter and operate the elevator.*

1124A.3.2 Car inside. *The car inside shall allow for the turning of a wheelchair. The minimum clear distance between walls or between wall and door, excluding return panels, shall not be less than 80 inches by 54 inches (2032 mm by 1372 mm) for center-opening doors, and 68 inches by 54 inches (1727 mm by 1372 mm) for side-slide opening doors. (See Figure 11A-7A). Minimum distance from wall to return panel shall not be less than 51 inches (1295 mm).*

1124A.3.2.1 Door size. *Elevator doors shall provide a minimum clear width of 36 inches (914 mm).*

1124A.3.3 Car controls.

1124A.3.3.1 Car control location. *Elevator floor buttons shall be within 54 inches (1372 mm) above the finish floor for side approach and 48 inches (1219 mm) for front approach. Except for photoelectric tube bypass switches, emergency controls, including the emergency stop and alarm, shall be grouped in or adjacent to the bottom of the panel and shall be no lower than 35 inches (889 mm) from the floor. For multiple controls only, one set must comply with these height requirements. Floor buttons shall be provided with visual indicators to show when each call is registered. The visual indicators shall be extinguished when each call is answered.*

Note: *Where possible, a 48-inch (1219 mm) maximum height for elevator floor buttons is preferred.*

1124A.3.3.2 Car control buttons. *Passenger elevator car controls shall have a minimum dimension of 3/4 inch (19.1 mm) and shall be raised 1/8 inch (3.2 mm) plus or minus 1/32 inch (0.8 mm) above the surrounding surface.*

Control buttons shall be illuminated, shall have square shoulders and shall be activated by a mechanical motion that is detectable.

All control buttons shall be designated by 5/8-inch-minimum (15.9 mm) raised characters and standard raised symbols that comply with Sections ~~1143A.8~~ 1143A.6 and ~~1143A.9~~ 1143A.7 immediately to the left of the control button. Contracted Grade 2 Braille that conforms to Section ~~1143A.9~~ 1143A.7 shall be located immediately below the numeral, character or symbol. A minimum clear space of 3/8 inch (9.5 mm) or other suitable means of separation shall be provided between rows of control buttons. (See Figure 11A-7B.)

The raised characters and symbols shall be white on a black background. Controls and emergency equipment identified by raised symbols shall include, but not be limited to, "door open", "door close", "alarm bell", "emergency stop" and "telephone." The call button for the main entry floor shall be designated by a raised star at the left of the floor designation.

1124A.3.4 Emergency telephone. *The emergency telephone handset shall be positioned no higher than 48 inches (1219 mm) above the floor, and the handset cord shall be a minimum of 29 inches (737 mm) in length. If the telephone system is located in a closed compartment, the compartment door hardware shall conform to the provisions of Section ~~1127A.9.6.4~~ 1138A.4.4. Emergency intercommunication shall not require voice communication.*

1124A.4 Hall call buttons. *Call operation buttons shall be centered 42 inches (1067 mm) above the floor. Buttons shall be a minimum of 3/4-inch (19.1 mm) in size and shall be raised 1/8-inch (3.2 mm) plus or minus 1/32-inch (0.8 mm) above the surrounding surface. The button designating the "Up" direction shall be on top.*

Visual indication shall be provided to show each call registered and extinguished when answered. Objects adjacent to, and below, hall call buttons shall not project more than 4 inches (101.6 mm) from the wall. Hall call buttons shall be internally illuminated with a white light over the entire surface of the button.

1124A.5 Minimum illumination. *The minimum illumination at the car controls threshold and the landing when the car and landing doors are open shall not be less than 5 foot-candles (54 lx).*

1124A.6 Hall lantern. *A visual and audible signal shall be provided at each hoistway entrance indicating to the prospective passenger the car answering the call and its direction of travel as follows:*

1.The visual signal for each direction shall be a minimum of 2 1/2 inches (63.5 mm) high by 2 1/2 inches (63.5 mm) wide, and visible from the proximity of the hall call button.

2.The audible signal shall sound once for the "up" direction and twice for the "down" direction or of a configuration which distinguishes between up and down elevator travel.

3.The center line of the fixture shall be located a minimum of 6 feet (1829 mm) in height from the lobby floor.

4.The use of in-car lanterns, located in or on the car doorjambs, visible from the proximity of the hall call buttons and conforming to the above requirements of this section shall or will be acceptable.

Note: *The use of arrow shapes is preferred for visible signals.*

1124A.7 Door delay

1124A.7.1 Hall call*. The minimum acceptable time from notification that a car is answering a call (lantern and audible signal) until the doors of the car start to close shall be calculated by the following equations but shall be no less than 5 seconds:*

T = D / (1.5 ft/s) or T = D / (445 mm/s)

Where T is the total time in seconds and D is the distance from a point in the lobby or landing area 60 inches (1524 mm) directly in front of the farthest call button controlling that car to the centerline of its hoistway door (see Figure 11A-7D). For cars with in-car lanterns, T begins when the lantern is visible from the vicinity of hall call buttons and an audible signal is sounded.

1124A.7.2 Door delay for car calls. *The minimum acceptable time for doors to remain fully open after receiving a call shall not be less than 5 seconds.*

1124A.8 Doorjamb marking. *The floor level at all elevator hoistway entrances shall be designated by raised characters provided on both jambs. Characters shall be 2 inches (50.8 mm) in height located with the centerline 60 inches (1524 mm) from the floor. On the main entry level, a raised five-pointed star shall be placed to the left of the raised character. The outside diameter of the star shall be 2 inches (50.8 mm) and all points shall be of equal length. The raised characters and the star shall be white on a black background. Contracted Grade 2 Braille, conforming to Section ~~1143A.9~~ 1143A.7, shall be placed below the corresponding raised characters and the star. The Braille translation for the star shall state "MAIN". The raised characters shall comply with Section ~~1143A.8~~ 1143A.6. (See Figure 11A-7C.)*

1124A.9 Door protective and reopening devices*. Doors closed by automatic means shall be provided with a door-reopening device that will function to stop and reopen a car door and adjacent hoistway door in case the car door is obstructed while closing.*

This reopening device shall also be capable of sensing an object or person in the path of a closing door without requiring contact for activation at a nominal 5 inches and 29 inches (127 mm and 737 mm) above the floor.

Door-reopening devices shall remain effective for a period of not less than 20 seconds. After such an interval, the doors may close in accordance with the requirements of ASME A17.1.

1124A.10 Operation and leveling*. The elevator shall be automatic and be provided with a self-leveling feature that will automatically bring the car to the floor landings within a tolerance of plus or minus 1/2 inch (12.7 mm) under rated loading to zero loading conditions. This self-leveling shall, within its zone, be entirely automatic and independent of the operating device and shall correct the overtravel or undertravel. The car shall also be maintained approximately level with the landing, irrespective of load.*

The clearance between the car platform sill and the edge of the hoistway landing shall be no greater than 1 1/4 inches (31.75 mm).

1124A.11 Platform (wheelchair) lifts.

1124A.11.1 General. *Platform (wheelchair) lifts may be provided between levels, in lieu of passenger elevators, when the vertical distance between landings, as well as the structural design and safeguards are as allowed by ASME A18.1, "Safety Standard for Platform Lifts and Stairway Chair Lifts"; the State of California, the Department of Industrial Relations, Division of Occupational Safety and Health (Title 8 "Elevator Safety Orders") and any applicable safety regulations of other administrative authorities having jurisdiction.*

If lifts are provided, they shall be designed and constructed to facilitate unassisted entry, operation and exit from the lift, and shall comply with restrictions and enhancements of this section in conjunction with Title 8 of the California Code of Regulations.

1124A.11.2 Size and clear floor space. *Platform (wheelchair) lifts shall be of sufficient size to accommodate a wheelchair in accordance with Section ~~1127A.9.4~~ 1138A.1.4.*

1124A.11.3 Lift access. *There shall be a level and clear floor area or landing at each floor or level served by platform (wheelchair) lifts. Clear floor areas or landings shall meet the applicable "accessible route" requirements.*

1124A.11.4 Standby power. *To ensure continued operation in case of primary power loss, platform (wheelchair) lifts shall be provided with standby power or with self-rechargeable battery power that provides sufficient power to operate all platform lift functions for a minimum of five upward and downward trips.*

1124A.11.5 Openness. *Platform (wheelchair) lifts on an accessible means of egress shall not be installed in a fully enclosed hoistway.*

1124A.11.6 Doors and gates. *Lifts shall have low energy power-operated doors or gates, which shall remain open for 20 seconds minimum. End doors shall have 32 inches (813 mm) minimum clear opening width. Side doors clear opening width shall be 42 inches (1067 mm) minimum.*

> ***Exception:*** *Lifts having doors or gates on opposite sides shall be permitted to have self-closing manual doors or gates.*

1124A.11.7 Restriction sign. *A sign complying with Section~~s 1143A.3 and 1143A.4~~ 1143A shall be securely fastened in a conspicuous place at each landing and on the platform. The sign shall state "No Freight" in letters not less than 5/8 inch (16 mm) high and include the International Symbol of Accessibility.*

SECTION 1125A
HAZARDS ON ACCESSIBLE ROUTES

1125A.1 Warning curbs*.*
(See Part 1 of this document for proposed amendment of this section)

1125A.2 Headroom clearance.
(See Part 1 of this document for proposed amendment of this section)

1125A.3 Overhanging obstructions*. Any obstruction that overhangs a pedestrian way shall be a minimum of 80 inches (2032 mm) above the walking surface as measured from the bottom of the obstruction. (See Figure 11A-1B). Where a guy support is used parallel to a path of travel, including, but not limited to, sidewalks, a guy brace, sidewalk guy or similar device shall be used to prevent an overhanging obstruction (see Section 1125A.2 for required headroom clearance).*

1125A.4 Free-standing signs. *Wherever signs mounted on posts or pylons protrude from the posts or pylons and the bottom edge of the sign is less than 80 inches (2032 mm) above the finished floor or ground level, the edges of such signs shall be rounded or eased and the corners shall have a minimum radius of 0.125 inches. (See Section 1125A.2 for required headroom clearance).*

SECTION 1126A
DOORS

1126A.1 Width and height of doors. *Doorways which provide access to common use areas or covered multifamily dwellings shall comply with the following:*

1. Permit the installation of a door not less than 36 inches (914 mm) in width, not less than 80 inches (2032 mm) in height and provide a clear width of not less than 32 inches (813 mm), measured with the door positioned at an angle of 90 degrees from its closed position.

2. Be capable of opening at least 90 degrees.

3. A pair of doors, manual or automatic, must have at least one leaf which provides a clear width of not less than 32 inches (813 mm), measured with the door positioned at an angle of 90 degrees from its closed position.

4. The width of any component in the egress system shall not be less than the minimum width required by Section 1005.

Revolving doors shall not be used as required entrances for persons with disabilities.

1126A.2 Level floor or landing. *The floor or landing on each side of an exit door shall be level. (See Chapter 10).*

1126A.2.1 Thresholds and changes in elevation at doors. *The floor or landing shall not be more than 1/2 inch (12.7 mm) lower than the top of the threshold of the doorway. (See Figure 11A-8I).*

Changes in level between 1/4 inch (6.35 mm) and 1/2 inch (12.7 mm) shall be beveled with a slope no greater than 1 unit vertical in 2 units horizontal (50 percent slope). Changes in level greater than 1/2 inch (12.7 mm) shall be accomplished by means of a ramp (see Section 1122A).

1126A.3 Maneuvering clearances at doors.

1126A.3.1 General. *The level floor or landing of an exit door shall have a length in the direction of the door swing of at least 60 inches (1524 mm) and a length opposite the direction of the door swing of at least 44 inches (1118 mm) measured at right angles to the plane of the door in its closed position. (See Figures 11A-8D, 11A-8E and 11A-8F for maneuvering spaces at sliding doors).*

1126A.3.2 Strike edge maneuvering space *The width of the level area on the side to which the door swings shall extend at least 24 inches (610 mm) past the strike edge of the door for exterior doors and at least 18 inches (457 mm) past the strike edge for interior doors.*

> ***Note:*** *Twenty-four inches (610 mm) is preferred for strike-side clearance.*

1126A.3.2.1 Front approach. *The following provisions shall apply to swinging doors with front approach:*

1. For pull side approach, the level floor or landing shall extend in the direction of the door swing at least 60 inches (1524 mm). (See Figure 11A-8A).
2. For push side approach the level floor or landing shall extend opposite the direction of the door swing at least 48 inches (1219 mm). (See Figure 11A-8A).
3. Doors with push side approach having both a closer and a latch shall be provided with a clear and level area extending a minimum of 12 inches (305 mm) past the strike edge on the approach side of the door. (See Figure 11A-8A).

1126A.3.2.2 Hinge side approach. *The following provisions shall apply to swinging doors with hinge side approach:*

1.Doors with pull side approach shall be provided with a level floor or landing not less than 60 inches (1524 mm) in depth. A clear and level area shall extend a minimum of 36 inches (914 mm) past the strike edge on the approach side of the door. (See Figure 11A-8B).

> ***Exception:*** *Doors with pull side approach and a level floor or landing greater than 60 inches (1524 mm) in depth shall be provided with a clear and level area at least 24 inches (610 mm) past the strike edge of the door for exterior doors and at least 18 inches (457 mm) past the strike edge for interior doors.*

2.Doors with push side approach shall have a level floor or landing not less than 44 inches (1118 mm) in depth, and shall be provided with a clear and level area extending a minimum of 54 inches (1372 mm) from the strike edge of the door jamb past the hinge side of the door. Doors with a latch and closer shall have a level floor or landing not less than 48 inches (1219 mm) depth at the push side of the door. (See Figure 11A-8B).

1126A.3.2.3 Latch side approach. *The following provisions shall apply to swinging doors with latch side approach:*

1.Doors with pull side approach shall have a level floor or landing not less than 60 inches (1524 mm) in depth, and shall be provided with a clear and level area extending a minimum of 24 inches (610 mm) past the strike edge on the approach side of the door. (See Figure 11A-8C).

> ***Exception:*** *Doors serving individual covered multifamily dwelling units shall have a minimum landing depth of 44 inches (1118 mm) except that doors with a closer shall have a minimum landing depth of 54 inches (1372 mm).*

2.Doors with push side approach shall have a level floor or landing not less than 44 inches (1118 mm) in depth, and shall be provided with a clear and level area extending a minimum of 24 inches (610 mm) past the strike edge on the approach side of the door. Doors with a closer shall have a level floor or landing not less than 48 inches (1219 mm) depth at the push side of the door. (See Figure 11A-8C).

1126A.3.3 Space between consecutive doors. *The minimum space between two hinged or pivoted doors in series, serving other than a required exit stairway, shall provide a minimum of 48 inches (1219 mm) plus the width of the door swinging into the space. Doors in a series shall swing either in the same direction or away from the space between the doors. (See Figure 11A-8G, and 11A-8H).*

Where the door opens into a stair or smokeproof enclosure, the landing need not have a minimum length of 60 inches (1524 mm). (See Figure 11A-8H).

1126A.4 Closer-effort to operate doors*. Maximum effort to operate doors shall not exceed 8½ pounds (38 N) for exterior doors and 5 pounds (22 N) for interior doors, such pull or push effort being applied at right angles to hinged doors and at the center plane of sliding or folding doors. Compensating devices or automatic door operators may be utilized to meet these standards. When fire doors are required, the maximum effort to operate the door may be increased to the minimum allowable by the appropriate enforcement agency, not to exceed 15 pounds (66.7 N).*

1126A.4.1 Door closer. *If the door has a closer, then the sweep period of the closer shall be adjusted so that from an open position of 70 degrees, the door will take at least 3 seconds to move to a point 3 inches (75 mm) from the latch, measured to the landing edge of the door.*

1126A.5 Type of lock or latch.
(See Part 1 of this document for proposed amendment of this section)

1126A.6 Hand-activated door hardware. *Hand-activated door latching, locking and opening hardware shall be centered between 30 inches (762 mm) and 44 inches (1118 mm) above the floor. Latching and locking doors that are hand-activated and on an accessible route shall be operable with a single effort by lever type hardware, panic bars, push-pull activating bars or other hardware designed to provide passage without requiring the ability to grasp the opening hardware. Locked exit doors shall operate consistent with Section 1126A.4, in the direction of egress.*

1126A.6.1 Lever type hardware. *The lever or lever of actuated latches or locks shall be curved with a return to within 1/2 inch (12.7 mm) of the door to prevent catching on the clothing of persons during egress.*

Exception: *Group R and U Occupancies with an occupant load of 10 or less.*

1126A.7 Smooth surface. *The bottom 10 inches (254 mm) of all doors and/or gates shall have a smooth, uninterrupted surface to allow the door or gate to be opened by a wheelchair footrest without creating a trap or hazardous condition. Where narrow frame doors are used, a 10-inch (254 mm) high smooth panel shall be installed on the push side of the door, which will allow the door to be opened by a wheelchair footrest without creating a trap or hazardous condition.*

Exception: *Automatic and sliding doors or gates.*

SECTION 1127A
COMMON USE FACILITIES

Note: *For public use facilities, see Chapter 11B of this code.*

1127A.1 General. *When provided, common use areas and facilities in covered multifamily housing developments shall be accessible to persons with disabilities. Common use facilities include, but are not limited to, lobbies, toilet and bathing facilities, laundry facilities, community rooms, clubhouses, health and fitness facilities, game rooms and portions of common use tenant storage. All entrances, doors, fixtures and controls shall be on an accessible route. Facilities and fixtures required to be accessible shall comply with the following provisions:*

*1.**Doors.*** *Doors to accessible bathrooms shall comply with Section 1126A. Doors shall not swing into the floor space required for any fixture.*

*2.**Clear floor space.*** *All fixtures and controls shall be on an accessible route. Clear floor spaces at fixtures and controls, the accessible route and the turning space may overlap. This clear space shall comply with Sections ~~1127A.9.4 and 1127A.9.5~~ 1138A.1.4 and 1138A.3.*

*3.**Water closets.*** *Where a toilet stall is provided, it shall comply with Section 1127A.2.1 or 1127A.2.2, and its water closet shall comply with Section 1127A.2.3.*

*4.**Lavatory and mirrors.*** *Where a lavatory and/or mirror is provided, it shall comply with Section 1127A.3 and/or 1127A.8.3.*

*5.**Controls and dispensers.*** *Where controls, dispensers, receptacles or other types of equipment are provided, at least one of each shall be on an accessible route and shall comply with Sections 1127A.8 and ~~1127A.9.5~~ 1138A.3.*

*6.**Bathing and shower facilities.*** *Where bathtubs or showers are provided, at least one fixture of each type provided shall be accessible per room. For bathtubs, see Section 1127A.5.2. For shower~~s~~ compartments, see Section 1127A.5.3.*

*7.**Toilet facilities.*** *Toilet facilities shall comply with Section 1127A.2.*

*8.**Laundry facilities.** Laundry facilities shall comply with Section 1127A.10.*

*9.**Storage facilities.** Storage facilities shall comply with Section 1127A.11.*

*10. **Fixed or built-in seating, tables and counters.** Fixed or built-in seating, tables, and counters shall comply with Section 1127A.12.*

***1127A.2 Toilet facilities.** When common use toilet facilities are provided for residents or guests, at least one percent of the total number of fixtures but not less than one of each type shall comply with this section.*

1127A.2.1 Multiple-accommodation toilet facilities.
(See Part 1 of this document for proposed amendment of this section)

1127A.2.2 Single-accommodation toilet facilities.
(See Part 1 of this document for proposed amendment of this section)

1127A.2.3 Water closets.
(See Part 1 of this document for proposed amendment of this section)

1127A.2.4 Accessible urinals.
(See Part 1 of this document for proposed amendment of this section)

1127A.3 Accessible lavatories.
(See Part 1 of this document for proposed amendment of this section)

1127A.4 Grab bars, tub and shower seats, fasteners and mounting devices.

***1127A.4.1 General.** Grab bars, tub and shower seats, fasteners and mounting devices required by this chapter shall comply with this section.*

1127A.4.2 Location.
(See Part 1 of this document for proposed amendment of this section)

1127A.4.3 Diameter or width.
(See Part 1 of this document for proposed amendment of this section)

***1127A.4.4 Structural strength.** The structural strength of grab bars, tub and shower seats, fasteners, and mounting devices shall meet the following specifications:*

1.Bending stress in a grab bar or seat induced by the maximum bending moment from the application of a 250-pound (1112 N) point load shall be less than the allowable stress for the material of the grab bar or seat.

2.Shear stress induced in a grab bar or seat by the application of a 250-pound (1112N) point load shall be less than the allowable shear stress for the material of the grab bar or seat, and if its mounting bracket or other support is considered to be fully restrained, then direct and torsional shear stresses shall not exceed the allowable shear stress.

3.Shear force induced in a fastener or mounting device from the application of a 250-pound (1112 N) point load shall be less than the allowable lateral load of either the fastener or mounting device or the supporting structure, whichever is the smaller allowable load.

4.Tensile force induced in a fastener by a direct tension force of a 250 pound (1112 N) point load, plus the maximum moment from the application of a 250-pound (1112 N) point load, shall be less than the allowable withdrawal load between the fastener and supporting structure.

5.Grab bars shall not rotate within their fittings.

1127A.4.5 Surface.
(See Part 1 of this document for proposed amendment of this section)

1127A.4.6 Spacing.
(See Part 1 of this document for proposed adoption of this section)

1127A.5 Bathing facilities.

1127A.5.1 General. *When common use bathing facilities are provided for residents or guests, including showers, bathtubs or lockers, at least one of each type of fixture in each facility, and not less than 1 percent of all fixtures, shall comply with this section.*

1127A.5.2 Bathtubs.
(See Part 1 of this document for proposed amendment of this section)

1127A.5.3 Showers.
(See Part 1 of this document for proposed amendment of this section)

1127A.6 Lockers.

1127A.6.1 General.
(See Part 1 of this document for proposed amendment of this section)

1127A.7 Signs

1127A.7.1 General. *All accessible toilet and bathing facilities shall be identified by the "International Symbol of Accessibility." Signs need not be provided for facilities within a dwelling unit or guestroom.*

1127A.7.2 Identification symbols.
(See Part 1 of this document for proposed amendment of this section)

1127A.7.2.1 Men's sanitary facilities. *Men's sanitary facilities shall be identified by an equilateral triangle, ¼ inch (6.4 mm) thick with edges 12 inches (305 mm) long and a vertex pointing upward. The triangle symbol shall contrast with the door, either light on a dark background or dark on a light background.*

1127A.7.2.2 Women's sanitary facilities. *Women's sanitary facilities shall be identified by a circle, ¼ inch (6.4 mm) thick and 12 inches (305 mm) in diameter. The circle symbol shall contrast with the door, either light on a dark background or dark on a light background.*

1127A.7.2.3 Unisex sanitary facilities. *Unisex sanitary facilities shall be identified by a circle, ¼ inch (6.4 mm) thick and 12 inches (305 mm) in diameter with a ¼ inch (6.4 mm) thick triangle superimposed on the circle and within the 12-inch (305 mm) diameter. The triangle symbol shall contrast with the circle symbol, either light on a dark background or dark on a light background. The circle symbol shall contrast with the door, either light on a dark background or dark on a light background.*

1127A.8 Toilet room fixtures and accessories.

1127A.8.1 Towel, sanitary napkins, waste receptacles. *Where towel, sanitary napkins, waste receptacles and other similar dispensing and disposal fixtures are provided, at least one of each type shall be located with all operable parts, including coin slots, within 40 inches (1016 mm) from the finished floor. Controls and operating mechanisms shall comply with Section ~~1127A.9.6.4~~ 1138A.4.*

1127A.8.2 Toilet tissue dispensers.
(See Part 1 of this document for proposed amendment of this section)

1127A.8.3 Mirrors.
(See Part 1 of this document for proposed amendment of this section)

1127A.9 Space allowances and reach ranges in common use areas.
(See Part 1 of this document for proposed relocation and amendment of this section)

1127A.10 Common accessible laundry rooms*.*

1127A.10.1 General. *Where common use laundry rooms are provided, at least one of each type of appliance provided in each laundry area shall be accessible, shall be on an accessible route and shall comply with this section. Such appliances include clothes washing machines, dryers, soap dispensers and any related features such as wash sinks, tables and storage areas.*

Where laundry rooms are provided on floors of an elevator building, each laundry room shall be accessible. Where there is one laundry room on a ground floor in each building, each laundry room shall be accessible. Where there is a laundry room on the ground floor of a building and another located in the basement, it is acceptable to have only the ground floor laundry room accessible.

1127A.10.2 Clear floor space. *There shall be a minimum clear space 30 inches perpendicular by 48 inches parallel (762 mm by 1219 mm) in front of clothes washers and dryers required to be accessible. There shall be a minimum clear space 30 inches by 48 inches (762mm by 1219 mm) provided for at least one of each type of fixture or appliance provided in the laundry room (e.g., soap dispensers, wash sinks, tables, storage areas).*

1127A.10.3 Controls.
(See Part 1 of this document for proposed amendment of this section)

1127A.10.4 Washing machines and clothes dryers.
(See Part 1 of this document for proposed amendment of this section)

1127A.11 Storage.
(See Part 1 of this document for proposed amendment of this section)

1127A.12 Fixed or built-in seating, tables and counters.

1127A.12.1 Minimum seating. *Where fixed or built-in seating, tables or counters are provided for residents or guests, 5 percent, but not less than one, shall be accessible as provided in this section.*

1127A.12.2 Seating.
(See Part 1 of this document for proposed amendment of this section)

1127A.12.3 Knee clearance.
(See Part 1 of this document for proposed amendment of this section)

1127A.12.4 Height of work surfaces.
(See Part 1 of this document for proposed amendment of this section)

Division IV — DWELLING UNIT FEATURES

Division IV Table of Contents

Section 1128A Covered Dwelling Units
Section 1129A Reserved
Section 1130A Accessible Route within Covered Multifamily Dwelling Units
Section 1131A Changes in Level on Accessible Routes
Section 1132A Doors
Section 1133A Kitchens
Section 1134A Bathing and Toilet Facilities
Section 1135A Laundry Rooms
Section 1136A Electrical Receptacle, Switch and Control Heights

SECTION 1128A
COVERED DWELLING UNITS

1128A.1 General. *Covered multifamily dwelling units shall be adaptable and accessible into and throughout the dwelling unit as provided in this division.*

> ***Note:*** *See Sections 1101A "Application" and 1102A "Building Accessibility" for dwelling units required to comply with this division.*

SECTION 1129A
RESERVED

SECTION 1130A
ACCESSIBLE ROUTE WITHIN COVERED MULTIFAMILY DWELLING UNITS

1130A.1 General. *An accessible route shall be provided through all rooms and spaces of the dwelling unit. The accessible route shall pass through the primary entry door, and shall connect with all additional exterior doors, required clear floor spaces at kitchen appliances and bathroom fixtures. For the purpose of this section, "accessible routes" may include hallways, corridors and ramps.*

> ***Exception:*** *An accessible route is not required from the interior of the unit into a basement or garage, except as provided in Section 1105A.1.*

1130A.2 Width. *The accessible route into and throughout covered multifamily dwelling units shall be at least 36 inches (914 mm) wide.*

SECTION 1131A
CHANGES IN LEVEL ON ACCESSIBLE ROUTES

1131A.1 Changes in level not exceeding ½ inch*. Abrupt changes in level along any accessible route shall not exceed ½ inch (12.7 mm). When changes in level do occur, they shall be beveled with a slope no greater than 1 unit vertical in 2 units horizontal (50-percent slope). Changes in level not exceeding ¼ inch (6.35 mm) may be vertical.*

1131A.2 Changes greater than ½ inch. *Changes in level greater than ½ inch (12.7 mm) shall be made by means of a ramp, elevator or platform (wheelchair) lift. See Section 1122A for ramps and Section 1124A.11 for platform (wheelchair) lifts.*

SECTION 1132A
DOORS

1132A.1 Primary entry doors and required exit doors.
(See Part 1 of this document for proposed amendment of this section)

1132A.2 Interior doors and secondary exterior doors.
(See Part 1 of this document for proposed amendment of this section)

1132A.3 Width and height of doors.
(See Part 1 of this document for proposed amendment of this section)

1132A.4 Level floor or landing. *See also Chapter 10. The floor or landing on each side of a door shall be level. Primary entry doors, required exit doors or secondary exterior doors with changes in height between the interior surface or floor level and the exterior surface or floor level shall comply with the following:*

1.Exterior landings of impervious construction (e.g., concrete, brick, flagstone) serving primary entry doors and required exit doors are limited to not more than 1/2 inch (12.7 mm) of change in height between floor surfaces. Changes in level shall comply with Section 1131A.

2.Exterior landings of pervious construction (e.g., wood decking with spaces) shall be the same level as the interior landing, except that secondary exterior doors may have no more than 1/2 inch (12.7 mm) of change in height between floor surfaces. Changes in level shall comply with Section 1131A.

3.Secondary exterior doors onto decks, patios, or balcony surfaces constructed of impervious materials (e.g., concrete, brick, flagstone) may have a maximum change in height from the interior landing of 4 inches (101.6 mm). Changes in height greater than 1/2 inch (12.7 mm) shall be accomplished by means of a ramp complying with Section 1114A or by means of a platform constructed to the level of the floor as illustrated in Figure 11A-8J.

4.Secondary exterior doors onto decks, patios or balcony surfaces constructed of impervious materials (e.g., concrete, brick, flagstone) may have a maximum change in height from the interior landing of 1 inch (25.4 mm), provided a ramp with a maximum slope of 1:8 is permanently installed. (See Figure 11A-8K.)

5.In buildings containing covered multifamily dwelling units, the floor or landing immediately outside the entry may be sloped up to 1/4 inch (6.35 mm) per foot (12 inches) (305 mm), in a direction away from the primary entrance of the dwelling unit for drainage.

1132A.4.1 Thresholds. *Thresholds at the primary entry and required exit doors shall be no higher than 1/2 inch (12.7 mm). Thresholds at secondary exterior doors, including sliding door tracks, shall be no higher than 3/4 inch (19.05 mm). Changes in height at interior door thresholds (e.g., floor material changes at door thresholds) shall not exceed 1/2 inch (12.7 mm). Thresholds shall comply with the following:*

1.Thresholds with a change in height of not more than 1/4 inch (6.35 mm) may be vertical.

2.Thresholds with a change in height between 1/4 inch (6.35 mm) and 3/4 inch (19.05 mm) shall be beveled with a slope no greater than 1 unit vertical in 2 units horizontal (50-percent slope).

1132A.5 Maneuvering clearances at doors.

1132A.5.1 General. *Maneuvering clearances at interior doors shall provide a minimum length on both sides of the door of at least 42 inches (1067 mm) measured at a right angle to the plane of the door in its closed position.*

Exceptions:

1. *A 39-inch (991 mm) length is acceptable when a minimum clear opening width of 34 inches (864 mm) is provided.*

2. *The floor or landing on the dwelling unit side of the primary entry door and any required exit door shall have a minimum length of not less than 44 inches (1118 mm). Section 1126A.3 shall apply to maneuvering clearances at the side of the door exposed to common or public use spaces.*

1132A.5.2 Strike edge maneuvering space at doors. *The width of the level area on the side to which the door swings shall extend 18 inches (457 mm) past the strike edge for all doors. The width of the level area at the exterior side of the primary entry door and any required exit doors shall comply with Section 1126A.*

Notes:
1. See Section 1134A for bathrooms that are required to be accessible.

2.Twenty-four inches (610 mm) is preferred for strike edge clearance.

1132A.6 Closer-effort to operate doors*. Maximum effort to operate doors shall not exceed 8½ pounds (38 N) for exterior doors and 5 pounds (22 N) for interior doors, such pull or push effort being applied at right angles to hinged doors and at the center plane of sliding or folding doors. Compensating devices or automatic door operators may be utilized to meet these standards. When fire doors are required, the maximum effort to operate the door may be increased to the minimum allowable by the appropriate enforcement agency, not to exceed 15 pounds (66.7 N).*

1132A.7 Type of lock or latch.
(See Part 1 of this document for proposed amendment of this section)

1132A.8 Hand-activated door hardware. *Hand-activated door latching, locking and opening hardware shall be centered between 30 inches (762 mm) and 44 inches (1118 mm) above the floor. Latching and locking doors that are hand-activated and on an accessible route shall be operable with a single effort by lever-type hardware, panic bars, push-pull activating bars or other hardware designed to provide passage without requiring the ability to grasp the opening hardware. Locked exit doors shall operate consistent with Section 1132A.6, in the direction of egress.*

1132A.8.1 Lever-type hardware. *The lever or lever of actuated latches or locks shall be curved with a return to within 1/2 inch of the door to prevent catching on the clothing of persons during egress in Group R and U Occupancies with an occupant load greater than 10.*

1132A.9 Smooth surface. *The bottom 10 inches (254 mm) of all doors shall have a smooth, uninterrupted surface to allow the door to be opened by a wheelchair footrest without creating a trap or hazardous condition. Where narrow frame doors are used, a 10-inch-high (254 mm) smooth panel shall be installed on the push side of the door which will allow the door to be opened by a wheelchair footrest without creating a trap or hazardous condition.*

Exception: *Automatic and sliding doors.*

1132A.10 Door signal devices. *Every primary entrance to a covered multifamily dwelling unit shall be provided with a door buzzer, bell, chime or equivalent. The activating mechanism shall be mounted a maximum of 48 inches (1219 mm) above the floor and connected to permanent wiring.*

SECTION 1133A
KITCHENS

1133A.1 General. *Kitchens shall be on an accessible route and shall comply with this section.*

1133A.2 Clear floor space. *Clear floor space at kitchens shall comply with the following:*

1.A clear floor space at least 30 inches (762 mm) by 48 inches (1219 mm) that allows a parallel approach by a person in a wheelchair shall be provided at the range or cooktop.

2.A clear floor space at least 30 inches (762 mm) by 48 inches (1219 mm) that allows either a parallel or forward approach shall be provided at the kitchen sink and all other fixtures or appliances including the oven, dishwasher, refrigerator/freezer and trash compactor.

3.The centerline of the 30-inch (762 mm) by 48-inch (1219 mm) clear floor space provided for parallel or forward approach shall be aligned with the centerline of the appliance or fixture. (See Figure 11A-10A).

1133A.2.1 Clear width.
(See Part 1 of this document for proposed amendment of this section)

1133A.3 Removable base cabinets.
(See Part 1 of this document for proposed amendment of this section)

1133A.4 Countertops. *Kitchen countertops shall comply with this section and shall be provided with the following (see Section 1133A.4.1 for repositionable countertop requirements):*

1.A minimum linear length of 30 inches (762 mm) of countertop shall be provided for the kitchen sink installation.

2.A minimum linear length of 30 inches (762 mm) of countertop shall be provided for a work surface.

3.The sink and work surface may be a single integral unit a minimum of 60 inches (1524 mm) in length, or be separate components.

Exception: *Two 15-inch (381 mm) minimum width breadboards may be provided in lieu of the required 30 inches (762 mm) of countertop work surface.*

1133A.4.1 Repositionable countertops.
(See Part 1 of this document for proposed amendment of this section)

1133A.5 Lower shelving. *Lower shelving and/or drawer space shall be provided in the kitchen at a height of no more than 48 inches (1219 mm) above the floor.*

1133A.6 Kitchen sink faucet controls. *Faucet controls and operating mechanisms shall be operable with one hand and shall not require tight grasping, pinching or twisting of the wrist.*

The force required to activate controls shall be no greater than 5 pounds ~~force~~ (22.2N). Lever-operated, push-type and electronically controlled mechanisms are examples of acceptable designs. Self-closing valves are allowed if the faucet remains open for at least 10 seconds.

1133A.7 Knee and toe space.
(See Part 1 of this document for proposed adoption of this section)

1133A.7.1 Plumbing protection.
(See Part 1 of this document for proposed adoption of this section)

SECTION 1134A
BATHING AND TOILET FACILITIES

1134A.1 General. *All bathrooms, bathing and toilet facilities within covered multifamily dwelling units shall comply with this section.*

1134A.2 Number of complying bathrooms. *Bathrooms shall be designed to comply with one of the following options:*

Option 1. *All bathrooms within the dwelling unit shall be designed to comply with the following:*

1. *Toilet, bathing and shower facilities shall comply with Section 1134A.4.*
2. *Bathtubs shall comply with Section 1134A.5.*
3. *Showers shall comply with Section 1134A.6.*
4. *Water closets shall comply with Section 1134A.7.*
5. *Lavatories, vanities, mirrors and towel fixtures shall comply with 1134A.8.*
6. *Bathrooms shall be provided with an accessible route into and through the bathroom.*
7. *If a door is provided, it shall comply with the requirements of Section 1132A.5.*
8. *A minimum 18-inch (457 mm) clear maneuvering space shall be provided on the swing side of the door at the strike edge of the door.*
9. *Switches, outlets and controls shall comply with Section 1142A.*
10. *Reinforced walls to allow for the future installation of grab bars around the toilet, tub and shower shall comply with Sections 1134A.5 for bathtubs, 1134A.6 for showers and 1134A.7 for water closets. Grab bars shall comply with Sections 1127A.4 and 1127A.2.2, Item 4.*

Option 2. *Only one bathroom within the dwelling unit shall be designed to comply with the following:*

1. *Toilet, bathing and shower facilities shall comply with Section 1134A.4.*
2. *Bathtubs shall comply with Section 1134A.5.*
3 *Showers shall comply with Section 1134A.6.*
4. *Water closets shall comply with Section 1134A.7.*
5. *Lavatories, vanities, mirrors and towel fixtures shall comply with 1134A.8.*
6. *Where both a tub and shower are provided in the bathroom, at least one shall be made accessible. Additional requirements apply to dwelling units containing two or more bathrooms when a bathtub is provided as the accessible bathing fixture.*
   Where two or more bathrooms are provided within the same dwelling unit and a bathtub is installed to comply with Option 2, Item 6 in one bathroom and a shower stall is provided in a subsequent bathroom, both the bathtub selected to comply with Option 2, Item 6 and at least one shower stall within the dwelling unit shall meet all the applicable accessibility requirements provided in Section 1134A. (See Section 1134A.5 for bathtubs, or Section 1134A.6 for showers.)
7. *When two or more lavatories are provided, at least one shall be made accessible and comply with Section 1134A.8.*
8. *Bathrooms shall be provided with an accessible route into and through the bathroom.*
9. *If a door is provided, it shall comply with the requirements of Section 1132A.5.*
10. *A minimum 18-inch (457 mm) clear maneuvering space shall be provided on the swing side of the door at the strike edge of the door.*

11. *Switches, outlets and controls shall comply with Section 1142A.*

12. *Reinforced walls to allow for the future installation of grab bars around the toilet, tub and shower shall comply with Sections 1134A.5 for bathtubs, 1134A.6 for showers and 1134A.7 for water closets. Grab bars shall comply with Sections 1127A.4 and 1127A.2.2, Item 4.*

When Option 2 is used, all additional bathrooms must comply with items 8 through 12 above.

***1134A.3 Powder rooms**. All powder rooms shall be designed to comply with Section 1134A.2, Option 2, Items 8 through 12. When the powder room is the only toilet facility located on an accessible level, it shall comply with the Option 2 Items listed above, plus all additional requirements located in Sections 1134A.4, 1134A.7 and 1134A.8.*

***1134A.4 Sufficient maneuvering space.** Bathing and toilet facilities required to be adaptable shall provide sufficient maneuvering space for a person using a wheelchair or other mobility aid to enter and close the door, use the fixtures, reopen the door and exit.*

Where the door swings into the bathroom or powder room, there shall be a clear maneuvering space outside the swing of the door of at least 30 inches by 48 inches (762 mm by 1219 mm) within the room. The clear maneuvering space shall allow the user to position a wheelchair or other mobility aid clear of the path of the door as it is closed and to permit use of fixtures.

Doors may swing into the required clear space at any fixture when a clear maneuvering space is provided outside the swing arc of the door so it can be closed.

Maneuvering spaces may include any knee space or toe space available below bathroom fixtures.

***1134A.5 Bathtubs.** Bathtubs required to be accessible shall comply with this section.*

*1.**Floor space.** There shall be a minimum clear floor space 48 inches parallel by 30 inches perpendicular (1219 mm by 762 mm) to the side of a bathtub or bathtub-shower combination (measured from the foot or drain end of the bathtub) to provide for the maneuvering of a wheelchair and transfer to and from the bathing facilities. The area under a lavatory may be included in the clear floor space provided the knee and toe space comply with Section 1134A.8. Cabinets under lavatories and toilets shall not encroach into the clear floor space.*

*2.**Reinforced walls for grab bars.** A bathtub installed without surrounding walls shall provide reinforced areas for the installation of floor-mounted grab bars.*

Where a bathtub is installed with surrounding walls, grab bar reinforcement shall be located on each end of the bathtub, 32 inches to 38 inches (813 mm to 965 mm) above the floor, extending a minimum of 24 inches (610 mm) from the front edge of the bathtub toward the back wall of the bathtub. The grab bar reinforcement shall be a minimum of 6 inches (152.4 mm) nominal in height. (See Figure 11A-9G).

Grab bar reinforcement shall be installed on the back wall of the bathtub a maximum of 6 inches (152.4 mm) above the bathtub rim extending upward to at least 38 inches (965 mm) above the floor. Grab bar backing shall be installed horizontally to permit the installation of a 48-inch (1219 mm) grab bar with each end a maximum of 6 inches (152.4 mm) from the end walls of the bathtub. The grab bar reinforcement shall be a minimum of 6 inches (152.4 mm) nominal in height.

*3.**Bathtub controls.** Faucet controls and operation mechanisms shall be operable with one hand and shall not require tight grasping, pinching or twisting of the wrist.*

The force required to activate controls shall be no greater than 5 pounds~~-force~~ (22.2N). Lever operated, push type and electronically controlled mechanisms are examples of acceptable designs.

*4.**Shower unit.** A shower spray unit is not required in bathtubs.*

*5.**Bathtub enclosures.** Doors and panels of bathtub enclosures shall be substantially constructed from approved, shatter-resistant materials. Hinged doors shall open outward. Glazing used in doors and panels of bathtub enclosures shall be fully tempered, laminated safety glass or approved plastic. When glass is used, it shall have minimum thickness of not less than 1/8 inch (3.17 mm) when fully tempered, or 1/4 inch (6.35 mm) when laminated, and shall pass the test requirements of this part, Chapter 24 Glass and Glazing. Plastics used in doors and panels of bathtub enclosures shall be of a shatter-resistant type.*

1134A.6 Showers. *Showers required to be accessible shall comply with this section.*

1. ***Size.*** *When one or more shower stalls are provided within the same dwelling unit, at least one shower stall shall comply with one of the following requirements.*

   1.1 The shower stall shall measure at least 42 inches wide by 48 inches deep (1067 mm by 1219 mm) with an entrance opening of at least 36 inches (914 mm) or;

   1.2 The shower stall shall measure at least 30 inches deep by 60 inches wide (762 mm by 1524 mm) with an entrance opening of at least 60 inches (1524 mm). A water closet may project a maximum of 12 inches (305 mm) into the opening provided that a minimum of 36 inches (914 mm) clear space is maintained between the water closet and the shower wall as illustrated in Figure 11A-9L or;

   1.3 Other shower stall configurations shall measure at least 36 inches deep by 60 inches wide (914 mm by 1524 mm) with an entrance opening of at least 36 inches (914 mm) when a wall is installed on the opening side.

2. ***Slope.*** *The maximum slope of the shower floor shall be ½ inch (12.7 mm) per foot in any direction and shall slope to a drain. The floor surfaces shall be of Carborundum or grit-faced tile or of material providing equivalent slip resistance.*

3. ***Floor space.*** *A clear maneuvering space at least 30 inches in width by 48 inches in length (762 mm by 1219 mm) shall be located outside the shower, flush and parallel to the control wall.*

4. ***Reinforced walls for grab bars.*** *Grab bar reinforcement shall be installed continuous in the walls of showers 32 inches to 38 inches (813 mm to 965 mm) above the floor. The grab bar reinforcement shall be a minimum of 6 inches (152.4 mm) nominal in height.*

   Glass-walled shower stalls shall provide reinforcement for installation of floor-mounted or ceiling-mounted grab bars.

5. ***Thresholds.*** *When a threshold is used, it shall be a maximum of 2 inches (50.8 mm) in height and have a beveled or sloped angle not exceeding 1 unit vertical in 2 units horizontal (26.6 degrees from the horizontal). Thresholds 1/2 inch (12.7 mm) or less in height may have a beveled or sloped angle not exceeding 1 unit vertical in 1 unit horizontal (45 degrees from the horizontal).*

6. ***Shower controls.*** *Faucet controls and operation mechanisms shall be operable with one hand and shall not require tight grasping, pinching or twisting of the wrist. The force required to activate controls shall be no greater than 5 pounds~~-force~~ (22.2 N). Lever operated, push-type and electronically controlled mechanisms are examples of acceptable designs.*

7. ***Shower enclosures.*** *Doors and panels of shower enclosures shall be substantially constructed from approved, shatter-resistant materials. Hinged shower doors shall open outward. Glazing used in doors and panels of shower enclosures shall be fully tempered, laminated safety glass or approved plastic. When glass is used, it shall have minimum thickness of not less than 1/8 inch (3.17 mm) when fully tempered, or ¼ inch (6.35 mm) when laminated, and shall pass the test requirements of this part, Chapter 24, Glass and Glazing. Plastics used in doors and panels of shower enclosures shall be of a shatter-resistant type.*

1134A.7 Water closets.
(See Part 1 of this document for proposed amendment of this section)

1134A.8 Lavatories, vanities, mirrors and towel fixtures*. Bathrooms or powder rooms required to be accessible shall have at least one accessible lavatory. Where mirrors and towel fixtures are provided, at least one of each shall be accessible.*

1. ***Location.*** *Vanities and lavatories shall be installed with the centerline of the fixture a minimum of 18 inches (457 mm) horizontally from an adjoining wall or fixture to allow for forward approach. When parallel approach is provided, lavatories shall be installed with the centerline of the fixture a minimum of 24 inches (610 mm) horizontally from an adjoining wall or fixture. The top of the fixture rim shall be a maximum of 34 inches (864 mm) above the finished floor.*

2. ***Floor space.*** *A clear maneuvering space at least 30 inches by 48 inches (762 mm by 1219 mm) shall be provided at lavatories and shall be centered on the lavatory.*

3. ***Cabinets.*** *Cabinets under lavatories are acceptable provided the bathroom has space to allow a parallel approach by a person in a wheelchair and the lavatory cabinets are designed with adaptable knee and toe space.*

4. ***Knee and toe space.*** *Knee and toe space shall be provided as follows:*

   4.1. The knee space shall be at least 30 inches (762 mm) wide and 8 inches (203.2 mm) deep.

   4.2. The knee space shall be at least 29 inches (737 mm) high at the front face and reducing to not less than 27 inches (686 mm) at a point 8 inches (203.2 mm) back from the front edge.

   4.3. The knee and toe space required in this section shall be provided by one of the following:

      4.3.1. The space beneath the lavatory shall be left clear and unobstructed;

      4.3.2. Any cabinet beneath the lavatory shall be removable without the use of specialized knowledge or specialized tools; or

      4.3.3. Doors to the cabinet beneath the lavatory shall be removable or openable to provide the required unobstructed knee and toe space.

   4.4. The toe space required in this section shall be provided as follows:

      4.4.1. Shall be at least 30 inches (762 mm) wide and centered on the lavatory.

      4.4.2. Shall be at least 17 inches (432 mm) deep, measured from the front edge.

      4.4.3. Shall be at least 9 inches (228.6 mm) high from the floor.

5. ***Finished floor.*** *The finished floor beneath the lavatory shall be extended to the wall.*

6. ***Plumbing protection.*** *Hot water and drain pipes exposed under lavatories shall be insulated or otherwise covered. There shall be no sharp or abrasive surfaces under lavatories.*

7. ***Lavatory faucet controls.*** *Faucet controls and operation mechanisms shall be operable with one hand and shall not require tight grasping, pinching or twisting of the wrist.*

   The force required to activate controls shall be no greater than 5 pounds~~-force~~ (22.2 N). Lever operated, push-type and electronically controlled mechanisms are examples of acceptable designs. Self-closing valves are allowed if the faucet remains open for at least 10 seconds.

8. ***Mirrors and towel fixtures.*** *Where mirrors or towel fixtures are provided they shall be mounted with the bottom edge no higher than 40 inches (1016 mm) from the floor.*

SECTION 1135A
LAUNDRY ROOMS

1135A.1 General. *If clothes washing machines and clothes dryers are provided in covered multifamily dwelling units, one of each type of appliance shall be provided. Where front-loading clothes washers are not provided, management shall provide assistive devices, on request of the occupant, to permit the use of top-loading clothes washers.*

SECTION 1136A
ELECTRICAL RECEPTACLE, SWITCH AND CONTROL HEIGHTS

1136A.1 Receptacle heights.
(See Part 1 of this document for proposed amendment of this section)

1136A.2 Switch and control heights.
(See Part 1 of this document for proposed amendment of this section)

Division V — FEATURES COMMON TO EXTERIOR AND INTERIOR OF BUILDINGS

Division V Table of Contents
(See Part 1 of this document for proposed amendment of Table of Contents)

SECTION 1137A
OTHER FEATURES AND FACILITIES

1137A.1 General.
(See Part 1 of this document for proposed amendment of this section)

SECTION 1138A
SPACE ALLOWANCES AND REACH RANGES
(See Part 1 of this document for proposed adoption of this section)

SECTION 1139A
ACCESSIBLE DRINKING FOUNTAINS
(See Part 1 of this document for proposed amendment of this section)

SECTION 1140A
ACCESSIBLE TELEPHONES

1140A.1 General. *If public telephones are provided, they shall comply with this section. On floors where public telephones are provided, at least one telephone shall be accessible. On any floor where two or more banks of multiple telephones are provided, at least one telephone in each bank shall be accessible.*

1140A.2 Clear floor or ground space. *A clear floor or ground space at least 30 inches by 48 inches (762 mm by 1219 mm) that allows either a forward or parallel approach by a person using a wheelchair shall be provided at telephones. Bases, enclosures and fixed seats shall not impede approaches to telephones by people who use wheelchairs. (See Figure 11A-11B).*

The minimum clear floor or ground space for wheelchairs may be positioned for forward or parallel approach to an object. Clear floor or ground space for wheelchairs may be part of the knee space required under some objects.

1140A.3 Relationship of maneuvering clearances to wheelchair spaces. *One full unobstructed side of the clear floor or ground space for a wheelchair shall adjoin another wheelchair clear floor space. If a clear floor space is located in an alcove or otherwise confined on all or part of three sides, additional maneuvering clearances shall be provided.*

1140A.4 Mounting height. *The highest operable part of the telephone shall be within the reach ranges specified in Figure 11A-11B. Telephones mounted diagonally in a corner that require wheelchair users to reach diagonally shall have the highest operable part no higher than 54 inches (1372 mm) above the floor. (See Figure 11A-11B).*

1140A.5 Enclosures. *If telephone enclosures are provided, they may overhang the clear floor space required in Sections 1140A.2 and 1140A.3 with the following limits:*

*1.**Side Reach Possible.*** *The overhang shall be no greater than 19 inches (483 mm). The height of the lowest overhanging part shall be equal to or greater than 27 inches (686 mm) above the floor.*

*2.**Full-height Enclosures.*** *Entrances to full-height enclosures shall be a minimum of 30 inches (762 mm) in width.*

*3.**Forward Reach Required.*** *If the overhang is greater than 12 inches (305 mm), then the clear width of the enclosure shall be 30 inches (762 mm) minimum; if the clear width of the enclosure is less than 30 inches (762 mm), then the height of the lowest overhanging part shall be equal to or greater than 27 inches (686 mm).*

1140A.6 Equipment for hearing impaired people*. Telephones shall be equipped with a receiver that generates a magnetic field in the area of the receiver cap. A reasonable number of the public telephones provided, but always at least one on each floor or in each bank, whichever is more, in a building or facility, shall be equipped with a volume control. Such telephones shall be capable of a minimum of 12 dbA and a maximum of 18 dbA above normal. If an automatic reset is provided, 18 dbA may be exceeded. Public telephones with volume control shall be hearing aid compatible and shall be identified by a sign containing a depiction of a telephone handset with radiating sound waves. (See Figure 11A-11D).*

1140A.7 Text telephones. *If a total of four or more public pay telephones are provided at the interior and exterior of a site, and if at least one of the total number provided is located in an interior location, at least one interior public text telephone shall be provided.*

1140A.7.1 Signage. *Text telephones shall be identified by the International TTY symbol (see Figure 11A-11C). If a facility has a public text telephone, directional signage indicating the location of the nearest such telephone shall be placed adjacent to all banks of telephones that do not contain a text telephone. Such directional signage shall include the International TTY symbol. If a facility has no banks of telephones, the directional signage shall be provided at the entrance or in a building directory.*

1140A.8 Controls. *Telephones shall have push-button controls where service for such equipment is available.*

1140A.9 Cord length. *The cord from the telephone to the handset shall be at least 29 inches (737 mm) long.*

1140A.10 Telephone books. *If telephone books are provided, they shall be located in a position that complies with the reach ranges in Figures 11A-1I and 11A-1J.*

SECTION 1141A
ACCESSIBLE SWIMMING POOLS

1141A.1 General. *Swimming pools in common use areas shall comply with the provisions of this section and Chapter 31B.*

1141A.2 Swimming pool deck areas. *Swimming pool deck areas must be accessible, and a mechanism to assist persons with disabilities gain entry into the pool and exit from the pool shall be provided. Such a mechanism may consist of a swimming pool lift device as long as the device meets all of the following criteria:*

1. *Has a seat that meets all of the following:*
   - *1.1. The seat must be rigid;*
   - *1.2. The seat must be not less than 17 inches (432 mm) and not more than 19 inches (483 mm), inclusive of any cushioned surface that might be provided, above the pool deck;*
   - *1.3. The seat must have two armrests. The armrest on the side of the seat by which access is gained shall be either removable or fold clear of the seat;*
   - *1.4. The seat must have a back support that is at least 12 inches (305 mm) tall; and*
   - *1.5. The seat must have an occupant restraint for use by the occupant of the seat and the restraint must meet the standards for operable controls in compliance with Section ~~1127A.9.6.4~~ 1138A.4.4.*
2. *Be capable of unassisted operation from both the deck and water levels.*
3. *Be stable and not permit unintended movement when a person is getting into or out of the seat*
4. *Be designed to have a live-load capacity of not less than 300 pounds*
5. *Be positioned so that, if the pool has water of different depths, it will place the operator into water that is at least three feet (914 mm) deep.*
6. *Be capable of lowering the operator at least 18 inches (457 mm) below the surface of the water.*

SECTION 1142A
ELECTRICAL RECEPTACLE, SWITCH AND CONTROL HEIGHTS

1142A.1 Receptacle heights.
(See Part 1 of this document for proposed amendment of this section)

1142A.2 Switch and control heights.
(See Part 1 of this document for proposed amendment of this section)

SECTION 1143A
SIGNAGE
(See Part 1 of this document for proposed amendment of this section)

SECTION 1144A RESERVED

SECTION 1145A RESERVED

SECTION 1146A RESERVED

SECTION 1147A RESERVED

SECTION 1148A RESERVED

SECTION 1149A RESERVED

Division VI — SITE IMPRACTICALITY TESTS

Division VI Table of Contents

Section 1150A Site Impracticality Tests
Test No. 1--Individual Building Test
Test No. 2--Site Analysis Test
Test No. 3--Unusual Characteristics Test

SECTION 1150A
SITE IMPRACTICALITY TESTS

1150A.1 General. *Covered multifamily dwellings in buildings without an elevator, located on sites with difficult terrain conditions or unusual characteristics, may employ the site impracticality tests in this division for determining the accessibility and adaptability provisions required by this chapter.*

Except as provided for in Section 1102A.3.1, the provisions of this section do not apply to multistory dwelling units in nonelevator buildings.

SINGLE BUILDING WITH ONE COMMON (LOBBY) ENTRANCE

The following may only be used for determining required access to covered multifamily dwelling units, in a single building with one common (lobby) entrance, located on a site with difficult terrain conditions or unusual characteristics:

All ground floor units in nonelevator buildings shall be adaptable and on an accessible route unless an accessible route to the common (lobby) entrance is not required as determined by Test No. 1, Individual Building Test, or Test No. 3, Unusual Characteristics Test, as described in this section.

Sites where either Test No. 1 or Test No. 3 is used and it is determined that an accessible route to the common (lobby) entrance is not required, at least 20 percent of the ground floor dwelling units shall comply with Division IV, and all remaining ground floor dwelling units shall comply with the features listed in Section 1150A.2 unless exempted by Test No. 3, Unusual Characteristics Test.

Test No. 1-- Individual Building Test may only be used if the site has terrain over 15 percent slope.

Test No. 3 -- Unusual Characteristics Test may be used if applicable.

Provisions to Test Nos. 1 and 2. *Where a building elevator is provided only as means of creating an accessible route to covered multifamily dwelling units on a ground floor, the building is not considered to be an elevator building for purposes of this code; hence, only the ground floor dwelling units would be covered.*

TEST NO. 1 – INDIVIDUAL BUILDING TEST

It is not required by this code to provide an accessible route when the terrain of the site is such that both of the following apply:

1. *The slopes of the undisturbed site measured between the planned entrance and all vehicular or pedestrian arrival points within 50 feet (15 240 mm) of the planned entrance exceed 15 percent**;** and*

2. *The slopes of the planned finished grade measured between the entrance and all vehicular or pedestrian arrival points within 50 feet (15 240 mm) of the planned entrance also exceed 15 percent.*

If there are no vehicular or pedestrian arrival points within 50 feet (15 240 mm) of the planned entrance, the slope for the purposes of Test No. 1 will be measured to the closest vehicular or pedestrian arrival point.

For purposes of these requirements, vehicular or pedestrian arrival points include public or resident parking areas, public transportation stops, passenger loading zones and public streets or sidewalks. To determine site impracticality, the slope would be measured at ground level from the point of the planned entrance on a straight line to (1) each vehicular or pedestrian arrival point that is within 50 feet (15 240 mm) of the planned entrance, or (2) if there are no vehicular or pedestrian arrival points within the specified area, the vehicular or pedestrian arrival point closest to the planned entrance. In the case of sidewalks, the closest point to the entrance will be where a public sidewalk entering the site intersects with the walk to the entrance. In the case of resident parking areas, the closest point to the planned entrance will be measured from the entry point to the parking area that is located closest to the planned entrance.

TEST NO. 2 – SITE ANALYSIS TEST

For a site having multiple buildings, or a site with a single building with multiple entrances, it is not required to provide an accessible route to all ground floor units under the following conditions:

1. *Calculate the percentage of the total buildable area of the undisturbed site with a natural grade less than 10- percent slope. The analysis of the existing slope (before grading) shall be done on a topographic survey with 2-foot (610 mm) contour intervals with slope determination made between each successive interval. The accuracy of the slope analysis shall be certified by a licensed engineer, landscape architect, architect or surveyor.*

2. *Determine the requirement of providing an accessible route to planned multifamily dwellings based on the topography of the existing natural terrain. The minimum percentage of ground floor units required on an accessible route shall equal the percentage of the total buildable area (not restricted-use areas) of the undisturbed site with an existing natural grade of less than 10-percent slope. In no case shall less than 20 percent of the ground floor dwelling units be on an accessible route and comply with the provisions of Division IV.*

3. *In addition to the percentage established in paragraph (2), all additional ground floor units in a building, or ground floor units served by a particular entrance, that fall within an 8.33-percent slope between their planned entrances and an arrival point, shall be on an accessible route and comply with the provisions of Division IV.*

4. *All additional ground floor units in a building, or ground floor units served by a particular entrance, not on an accessible route shall comply with the features listed in Section 1150A.2.*

TEST NO. 3 – UNUSUAL CHARACTERISTICS TEST

Unusual characteristics include sites located in a state or federally designated floodplain or coastal high-hazard areas and sites subject to other similar requirements of law or code that require the lowest floor or the lowest structural member of the lowest floor be designed to a specified level at or above the base flood elevation. An accessible route to a building entrance is impractical due to unusual characteristics of the site when:

1. *The original site characteristics result in a difference in finished grade elevation exceeding 30 inches (762 mm) and 10 percent measured between an entrance and all vehicular or pedestrian arrival points within 50 feet (15 240 mm) of the planned entrance; or*

2. *If there are no vehicular or pedestrian arrival points within 50 feet (15 240 mm) of the planned entrance, the unusual characteristics result in a difference in finished grade elevation exceeding 30 inches (762 mm) and 10 percent measured between an entrance and the closest vehicular or pedestrian arrival point.*

1150A.2 Additional requirements for Section 1150A.

All other ground floor dwelling units in nonelevator buildings shall be made to comply with the following requirements:

1. *Grab bar reinforcement: see Section 1134A.*
2. *Thirty-two inch (813 mm) clear door interior opening width: see Section 1132A.3.*
3. *Lever hardware: see Section 1132A.8.*
4. *Door signal devices: see Section 1132A.10.*
5. *Clear space by doors: see Chapters 10 and 11A.*
6. *Minimum 15-inch (381 mm) water closet seat height: see Section 1134A.7, Item 3.*
7. *Electrical receptacle outlet height: see Section 1136A.*
8. *Lighting and environmental control height: see Section 1136A.*
9. *Faucet controls: see Section 1134A.8, Item 7.*
10. *Water closet, bathtub and lavatory minimum space requirements: see Section 1134A.*
11. *Removable cabinets under the kitchen sink counter area: see Section 1133A.3.*

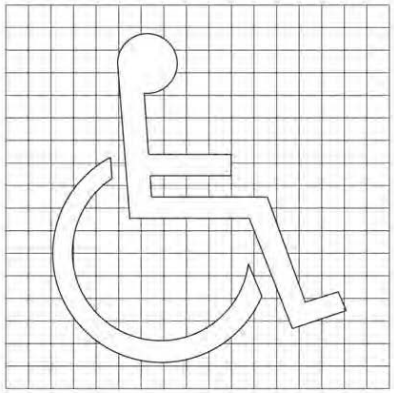

(a) SYMBOL PROPORTIONS

(b) DISPLAY CONDITIONS

THESE DIAGRAMS ILLUSTRATE THE SPECIFIC REQUIREMENTS OF THESE REGULATIONS AND ARE INTENDED ONLY AS AN AID FOR BUILDING DESIGN AND CONSTRUCTION.

FIGURE 11A-1A—INTERNATIONAL ACCESSIBILITY SYMBOL

FIGURE 11A-1B—HEADROOM CLEARANCE AND OVERHANGING OBSTRUCTION
(See Part 1 of this document for proposed amendment of this figure.)

FIGURE 11A-1C—WIDTH OF ACCESSIBLE ROUTE
(See Part 1 of this document for proposed amendment of this figure.)

FIGURE 11A-1D—WHEELCHAIR TURNING SPACE
(See Part 1 of this document for proposed amendment of this figure.)

FIGURE 11A-1E—MINIMUM CLEAR WIDTH FOR SINGLE WHEELCHAIR
(See Part 1 of this document for proposed amendment of this figure.)

FIGURE 11A-1F— MINIMUM CLEAR WIDTH FOR TWO WHEELCHAIRS
(See Part 1 of this document for proposed amendment of this figure.)

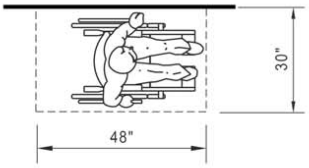

PARALLEL APPROACH

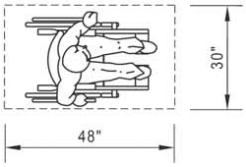

CLEAR FLOOR SPACE

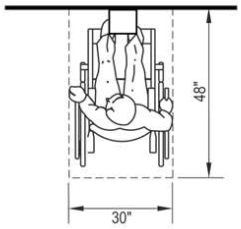

FORWARD APPROACH

THESE DIAGRAMS ILLUSTRATE THE SPECIFIC REQUIREMENTS OF THESE REGULATIONS AND ARE INTENDED ONLY AS AN AID FOR BUILDING DESIGN AND CONSTRUCTION

FIGURE 11A-1G—MINIMUM CLEAR FLOOR SPACE FOR WHEELCHAIRS

FIGURE 11A-1H—MINIMUM CLEAR FLOOR SPACE FOR WHEELCHAIRS
(See Part 1 of this document for proposed amendment of this figure.)

FIGURE 11A-1I—FORWARD REACH
(See Part 1 of this document for proposed amendment of this figure.)

FIGURE 11A-1J—SIDE REACH
(See Part 1 of this document for proposed amendment of this figure.)

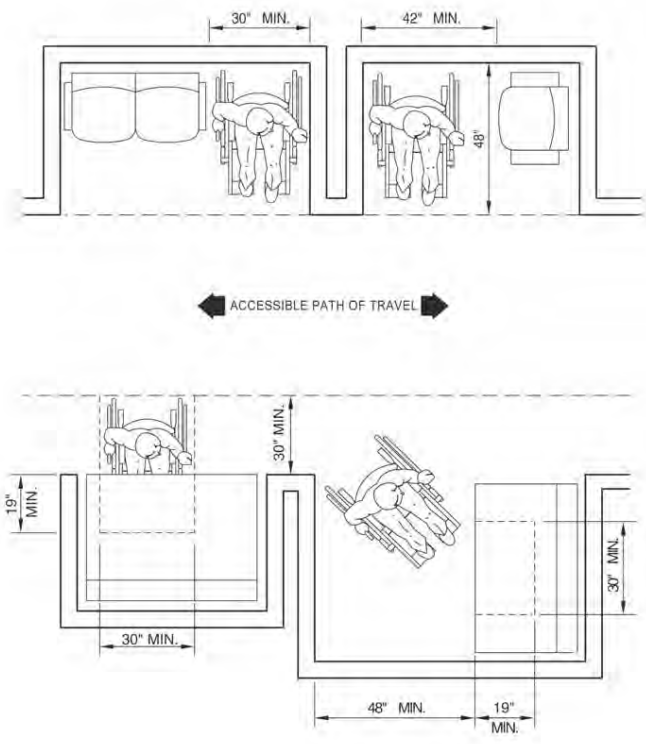

THESE DIAGRAMS ILLUSTRATE THE SPECIFIC REQUIREMENTS OF THESE REGULATIONS AND ARE INTENDED ONLY AS AN AID FOR BUILDING DESIGN AND CONSTRUCTION.

FIGURE 11A-1K—MINIMUM CLEARANCES FOR SEATING AND TABLE

FIGURE 11A-1L—CORRIDOR OVER 200 FEET (60 960 MM)
(See Part 1 of this document for proposed amendment of this figure.)

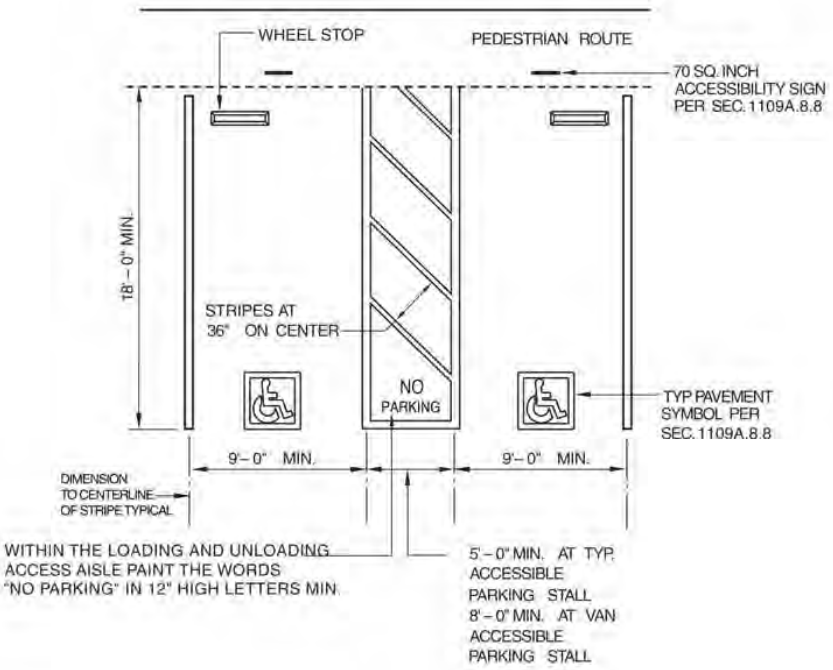

THIS DIAGRAM ILLUSTRATES THE SPECIFIC REQUIREMENTS OF THESE REGULATIONS AND IS INTENDED ONLY AS AN AID FOR BUILDING DESIGN AND CONSTRUCTION.

FIGURE 11A-2A—DOUBLE PARKING STALLS

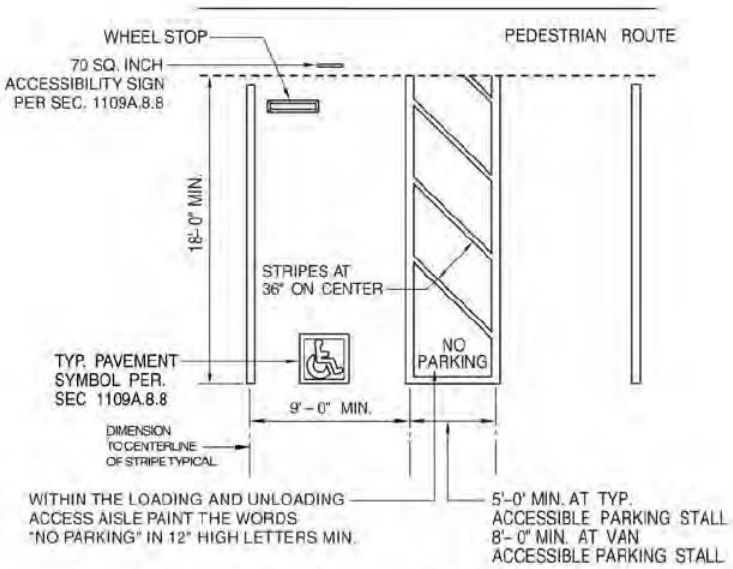

FIGURE 11A-2B—*SINGLE* *AND VAN ACCESSIBLE* *PARKING STALLS*

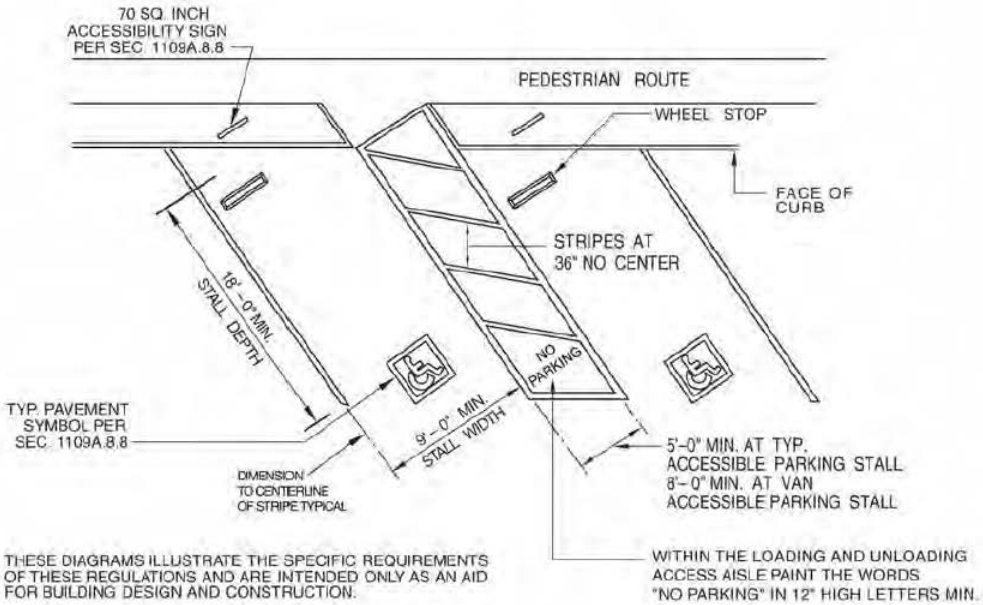

FIGURE 11A-2C—DIAGONAL PARKING STALLS

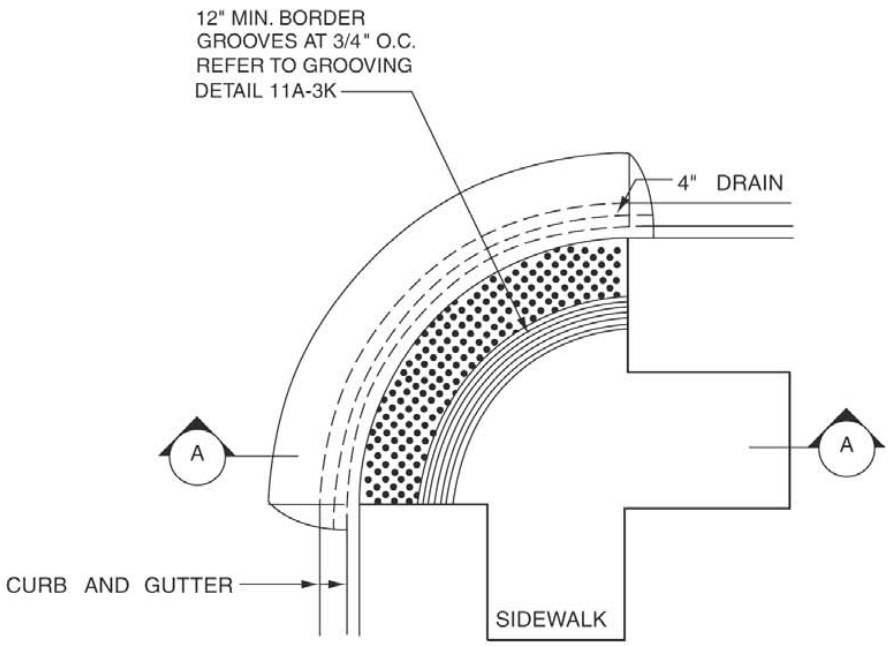

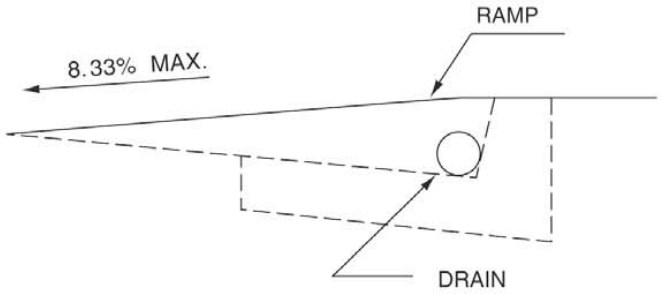

SECTION A–A

THESE DIAGRAMS ILLUSTRATE THE SPECIFIC REQUIREMENTS OF THESE REGULATIONS AND ARE INTENDED ONLY AS AN AID FOR BUILDING DESIGN AND CONSTRUCTION.

FIGURE 11A-3A—CURB DETAILS

FIGURE 11A-3B—CURB DETAIL
(See Part 1 of this document for proposed amendment of this figure.)

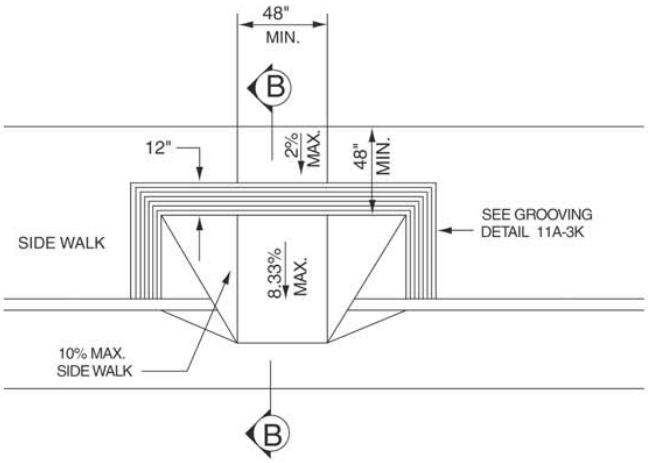

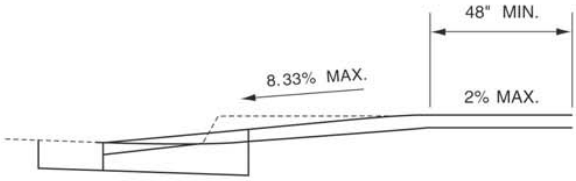

SECTION B–B

THESE DIAGRAMS ILLUSTRATE THE SPECIFIC REQUIREMENTS OF THESE REGULATIONS AND ARE INTENDED ONLY AS AN AID FOR BUILDING DESIGN AND CONSTRUCTION.

FIGURE 11A-3C—CURB DETAIL

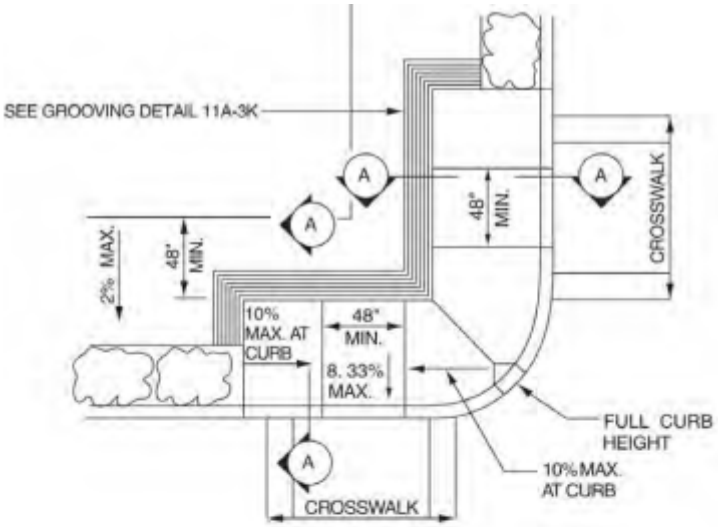

FIGURE 11A-3D—CURB DETAIL

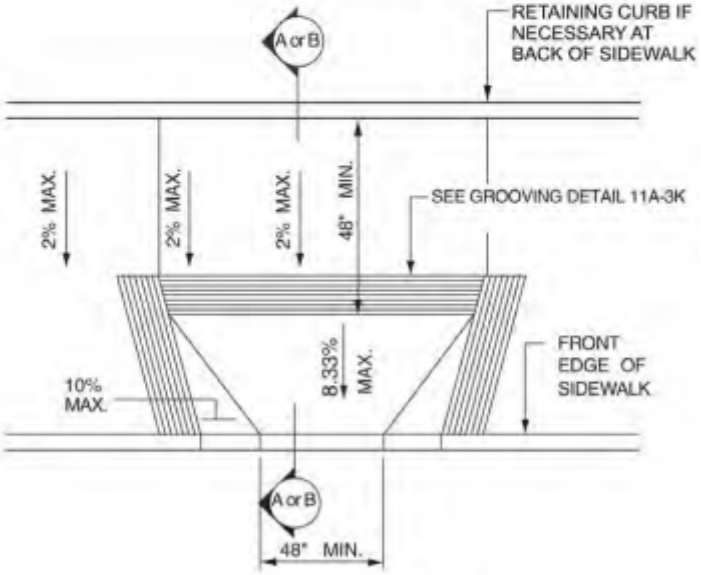

THESE DIAGRAMS ILLUSTRATE THE SPECIFIC REQUIREMENTS OF THESE REGULATIONS AND ARE INTENDED ONLY AS AN AID FOR BUILDING DESIGN AND CONSTRUCTION.

FIGURE 11A-3E—CURB DETAIL

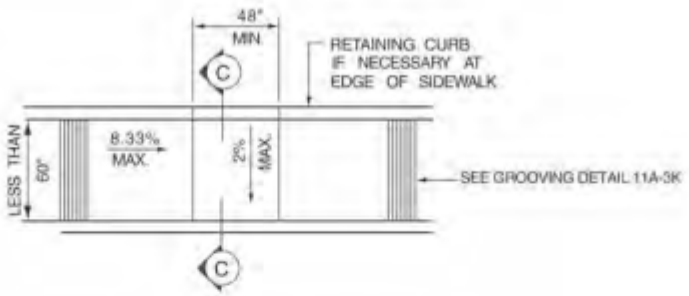

FIGURE 11A-3F—CURB DETAIL

SIDEWALK LESS THAN 60" WIDE

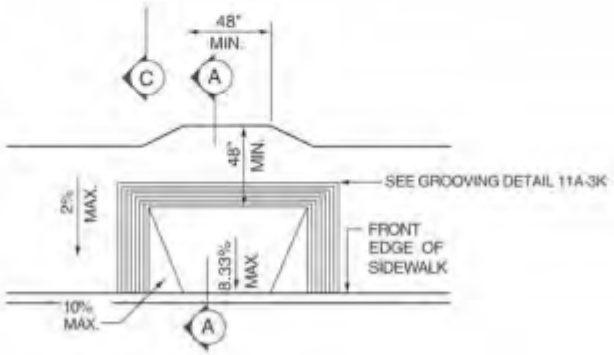

THESE DIAGRAMS ILLUSTRATE THE SPECIFIC REQUIREMENTS OF THESE REGULATIONS AND ARE INTENDED ONLY AS AN AID FOR BUILDING DESIGN AND CONSTRUCTION.

FIGURE 11A-3G—CURB DETAIL

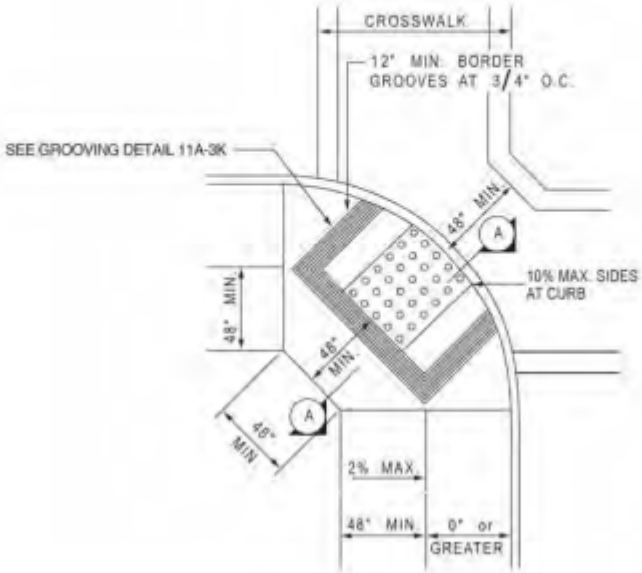

FIGURE 11A-3H—CURB DETAIL

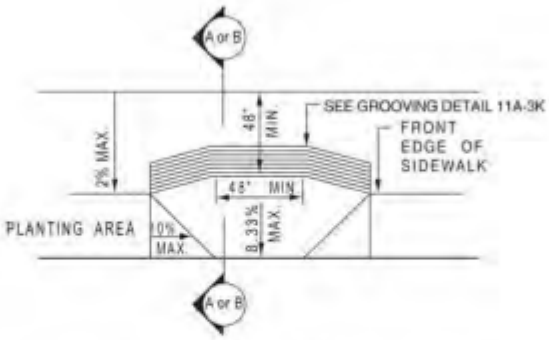

THESE DIAGRAMS ILLUSTRATE THE SPECIFIC REQUIREMENTS OF THESE REGULATIONS AND ARE INTENDED ONLY AS AN AID FOR BUILDING DESIGN AND CONSTRUCTION.

FIGURE 11A-3I—CURB DETAIL

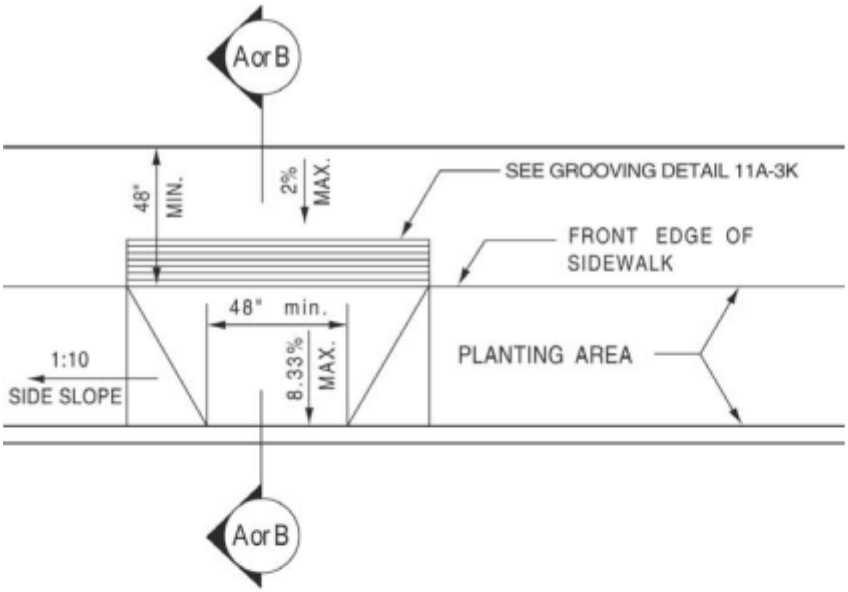

FIGURE 11A-3J—CURB DETAIL

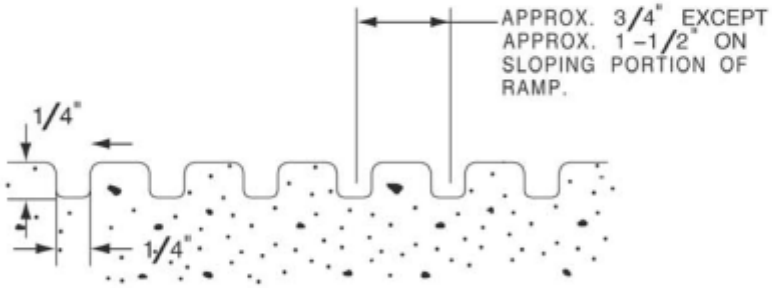

GROOVING DETAIL

THESE DIAGRAMS ILLUSTRATE THE SPECIFIC REQUIREMENTS OF THESE REGULATIONS AND ARE INTENDED ONLY AS AN AID FOR BUILDING DESIGN AND CONSTRUCTION.

FIGURE 11A-3K—CURB DETAIL

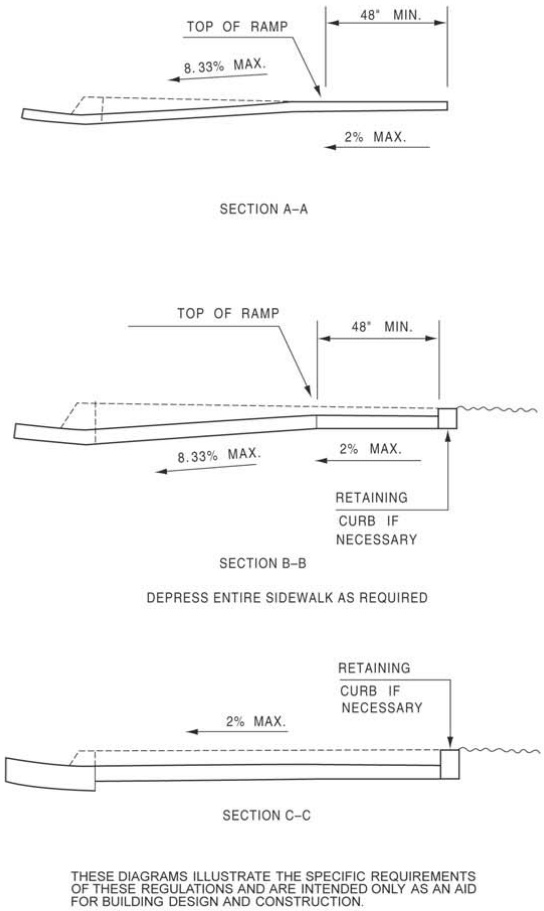

FIGURE 11A-3L—CURB SECTIONS

FIGURE 11A-3M – RETURNED CURB STYLE (See Figure 11B-21)
FIGURE 11A-3N – TRUNCATED DOMES (See Figure 11B-23A)
FIGURE 11A-3—(RESERVED)

(See Part 1 of this document for proposed deletion of the above referenced figures)

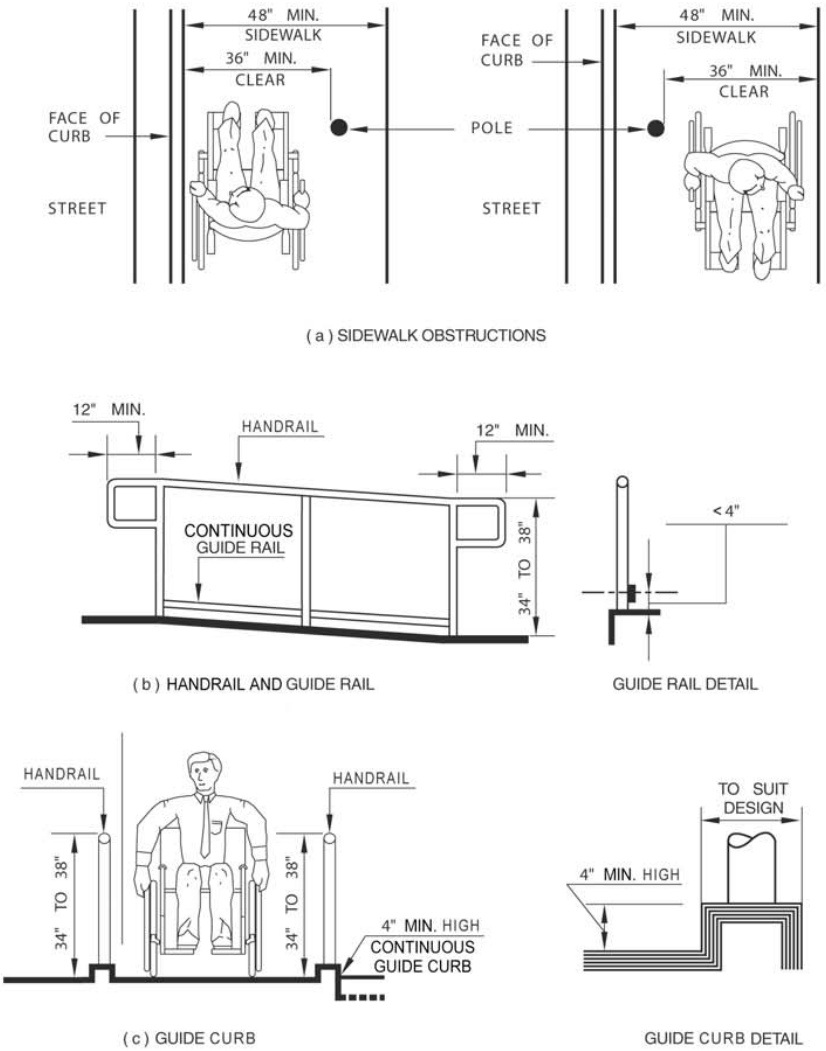

THESE DIAGRAMS ILLUSTRATE THE SPECIFIC REQUIREMENTS OF THESE REGULATIONS AND ARE INTENDED ONLY AS AN AID FOR BUILDING DESIGN AND CONSTRUCTION.

FIGURE 11A-5A—RAMPS AND SIDEWALKS

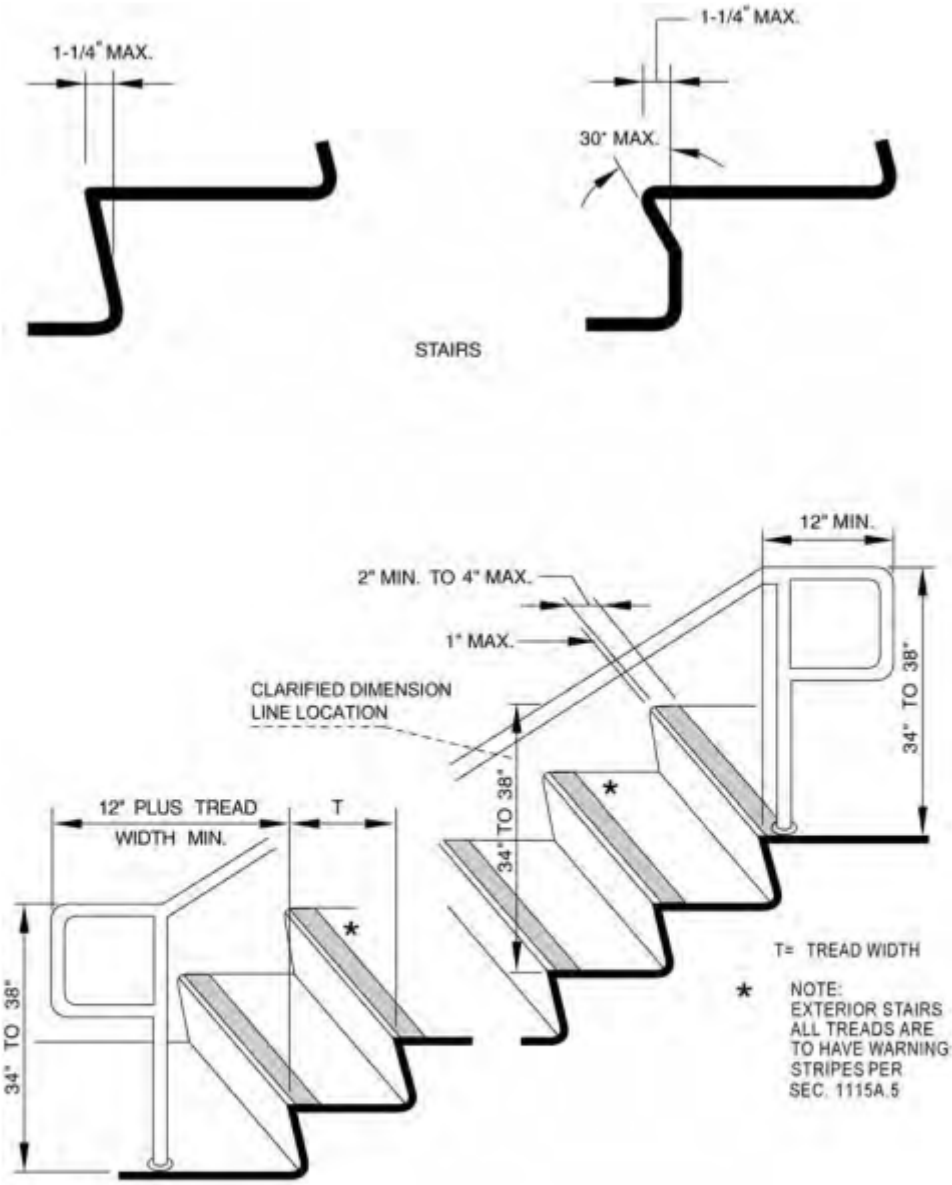

THESE DIAGRAMS ILLUSTRATE THE SPECIFIC REQUIREMENTS OF THESE REGULATIONS AND ARE INTENDED ONLY AS AN AID FOR BUILDING DESIGN AND CONSTRUCTION.

FIGURE 11A-6A —WARNING STRIPING AND HANDRAIL EXTENSIONS

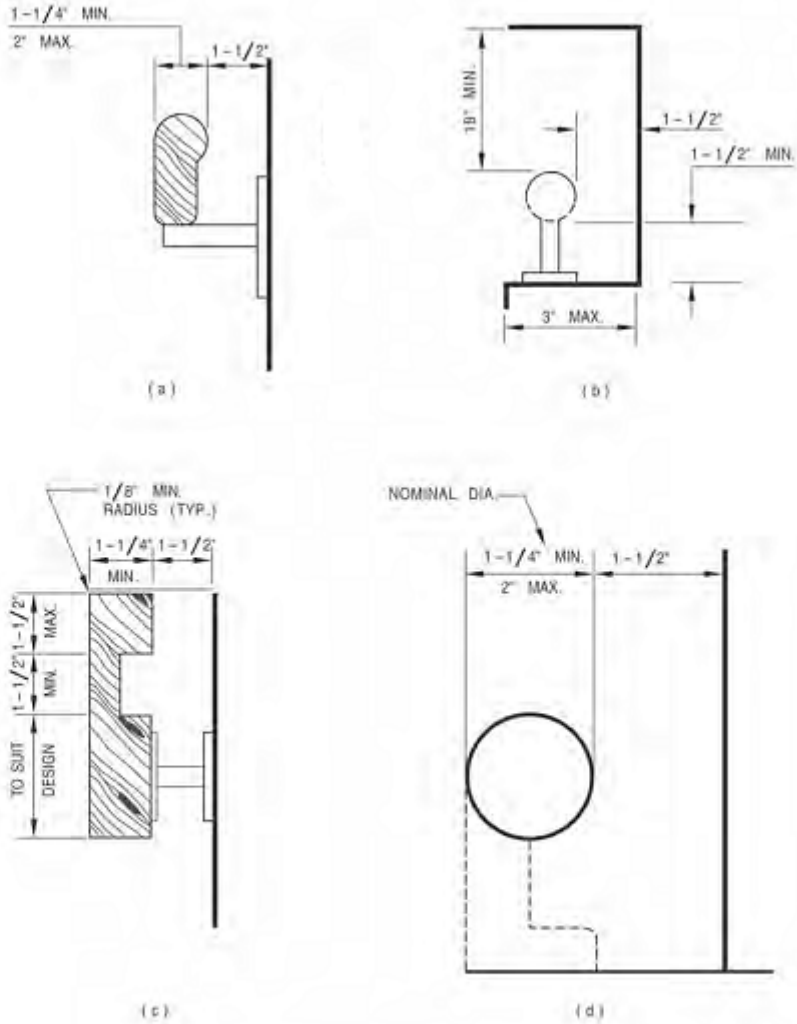

THESE DIAGRAMS ILLUSTRATE THE SPECIFIC REQUIREMENTS OF THESE REGULATIONS AND ARE INTENDED ONLY AS AN AID FOR BUILDING DESIGN AND CONSTRUCTION

FIGURE 11A-6B—STAIR HANDRAILS

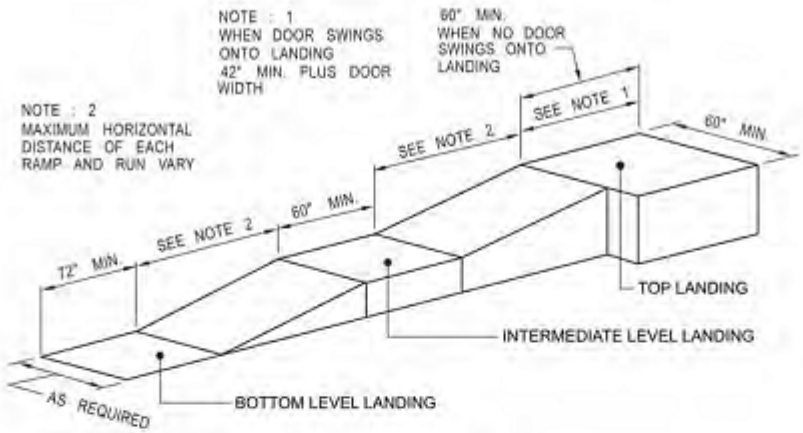

(a) STRAIGHT RAMP RUN

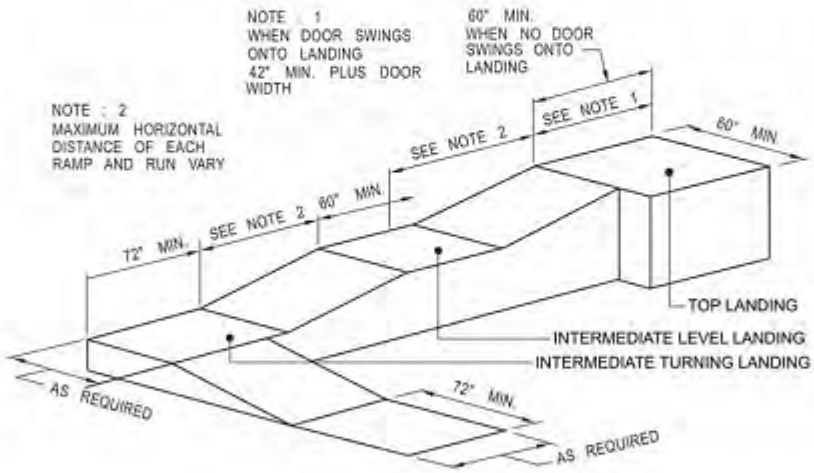

(b) RAMP WITH TURNING LANDING

THESE DIAGRAMS ILLUSTRATE THE SPECIFIC REQUIREMENTS OF THESE REGULATIONS AND ARE INTENDED ONLY AS AN AID FOR BUILDING DESIGN AND CONSTRUCTION.

FIGURE 11A-6C—RAMP DIMENSIONS

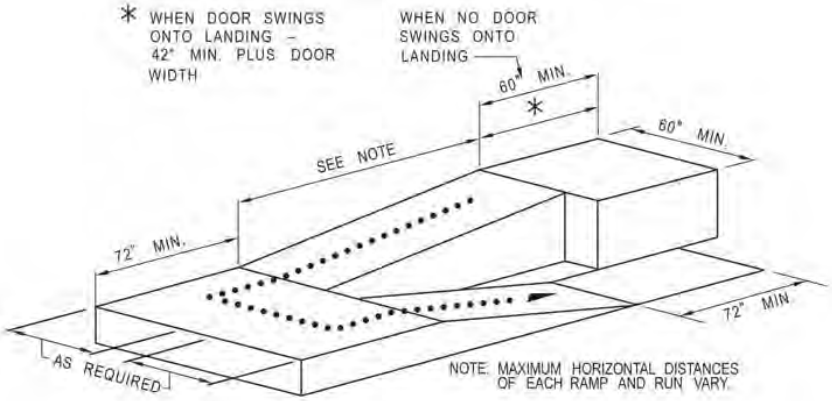

(a) RAMP WITH INTERMEDIATE SWITCH BACK LANDING

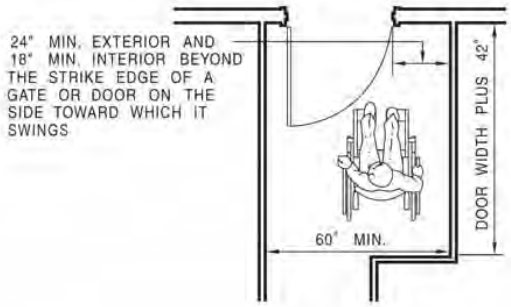

(b) RAMP LANDING AT DOORWAY

THESE DIAGRAMS ILLUSTRATE THE SPECIFIC REQUIREMENTS OF THESE REGULATIONS AND ARE INTENDED ONLY AS AN AID FOR BUILDING DESIGN AND CONSTRUCTION.

FIGURE 11A-6D—RAMP LANDING AND DOORWAY

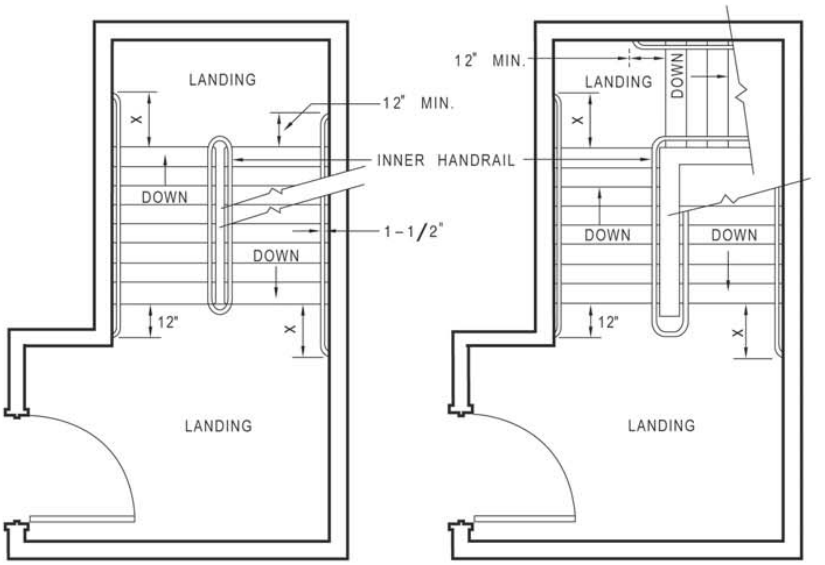

NOTE : INNER HANDRAIL AT LANDINGS OF STAIRS THAT DOUBLE BACK OR IMMEDIATELY TURN SHALL BE CONTINUOUS AND SHALL NOT EXTEND INTO LANDING OR PATH OF TRAVEL.

X : EXTENSION OF HANDRAIL SHALL BE EQUAL TO THE TREAD WIDTH PLUS 12 INCHES.

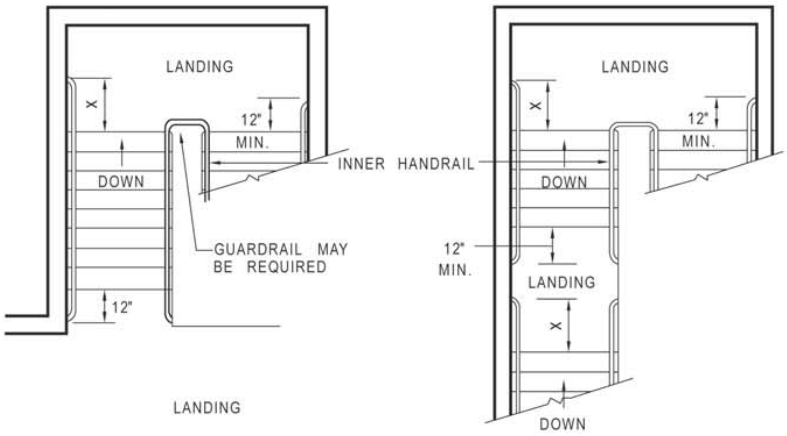

THESE DIAGRAMS ILLUSTRATE THE SPECIFIC REQUIREMENTS OF THESE REGULATIONS AND ARE INTENDED ONLY AS AN AID FOR BUILDING DESIGN AND CONSTRUCTION.

FIGURE 11A-6E—STAIR HANDRAILS

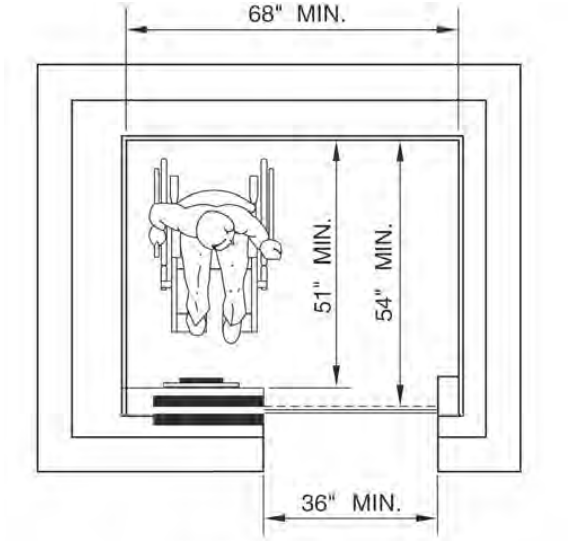

(a) SIDE OPENING DOOR

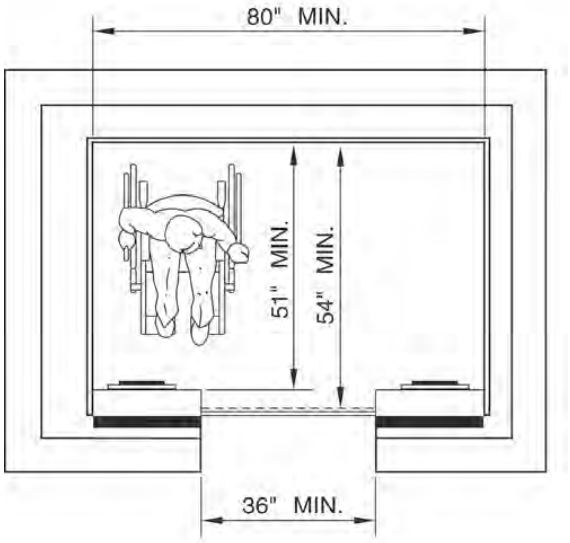

(b) CENTER OPENING DOOR

THIS DIAGRAM ILLUSTRATES THE SPECIFIC REQUIREMENTS OF THESE REGULATIONS AND IS INTENDED ONLY AS AN AID FOR BUILDING DESIGN AND CONSTRUCTION

FIGURE 11A-7A—MINIMUM DIMENSIONS OF ELEVATOR CARS

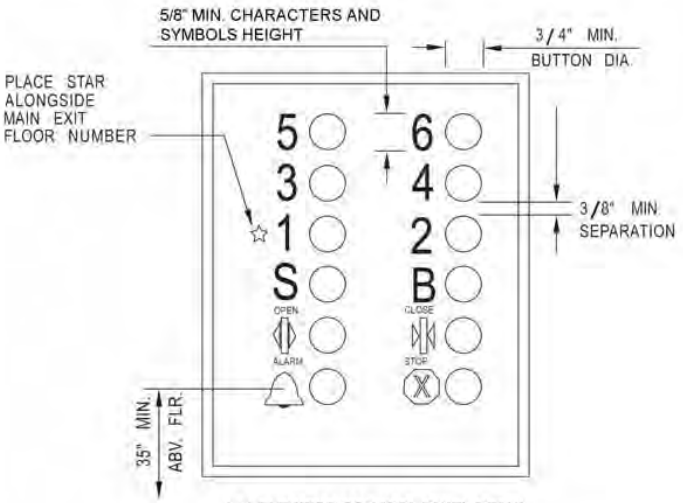

(a) ELEVATOR CONTROL PANEL DETAIL

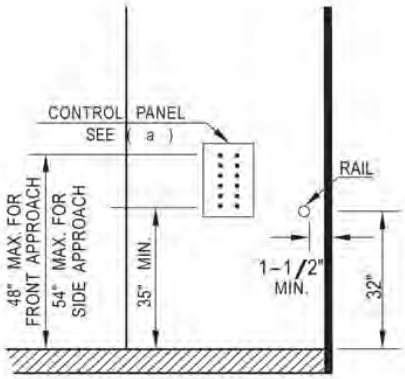

(b) MAXIMUM INSTALLATION HEIGHTS ABOVE CAB FLOOR

THIS DIAGRAM ILLUSTRATES THE SPECIFIC REQUIREMENTS OF THESE REGULATIONS AND IS INTENDED ONLY AS AN AID FOR BUILDING DESIGN AND CONSTRUCTION.

FIGURE 11A-7B—ELEVATOR CONTROL PANEL

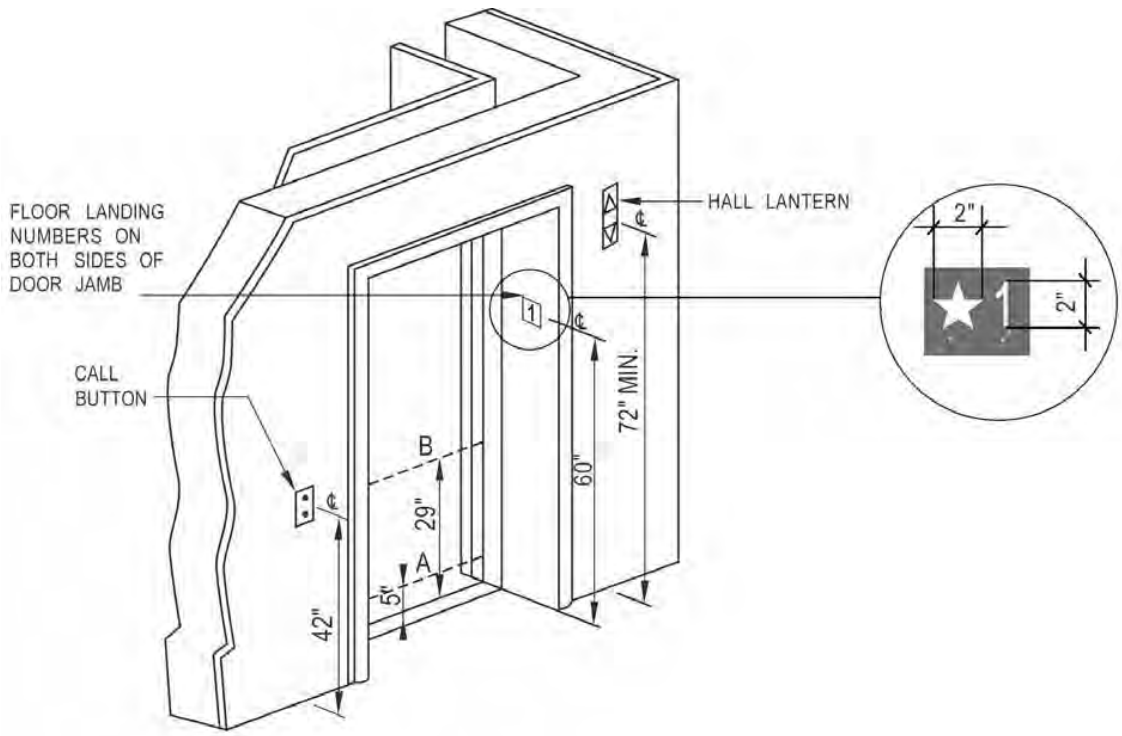

NOTE:
THE AUTOMATIC DOOR REOPENING DEVICE IS ACTIVATED IF AN OBJECT PASSES THROUGH EITHER LINE A OR LINE B. LINE A AND LINE B REPRESENT THE VERTICAL LOCATION OF THE DOOR REOPENING DEVICE NOT REQUIRING CONTACT.

FIGURE 11A-7C—HOISTWAY AND ELEVATOR ENTRANCES

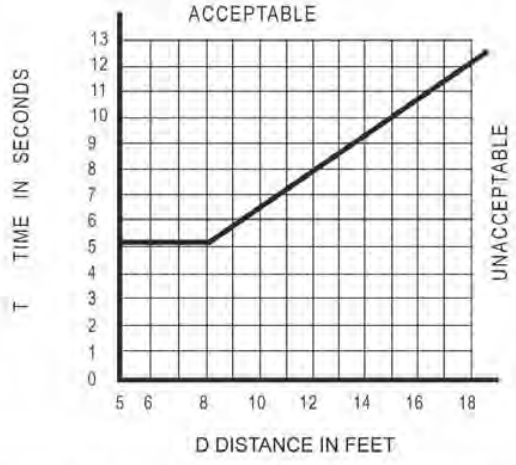

THIS DIAGRAM ILLUSTRATES THE SPECIFIC REQUIREMENTS OF THESE REGULATIONS AND IS INTENDED ONLY AS AN AID FOR BUILDING DESIGN AND CONSTRUCTION.

FIGURE 11A-7D—GRAPH OF TIMING EQUATION

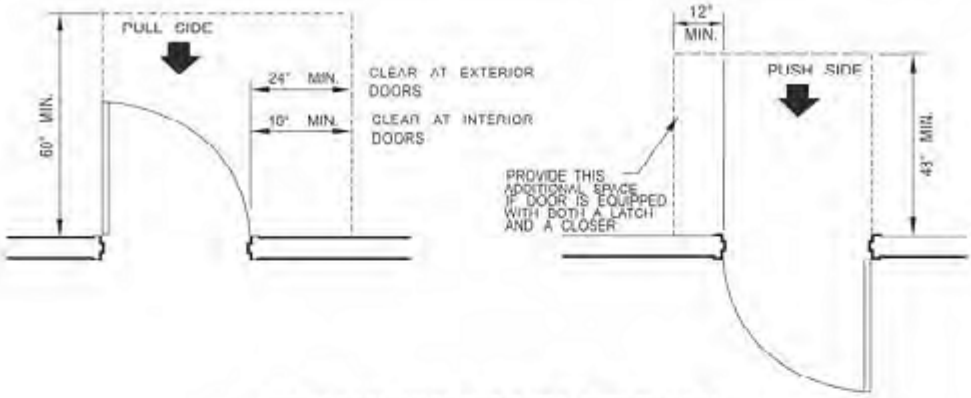

FIGURE 11A-8A—FRONT APPROACHES - SWINGING DOORS

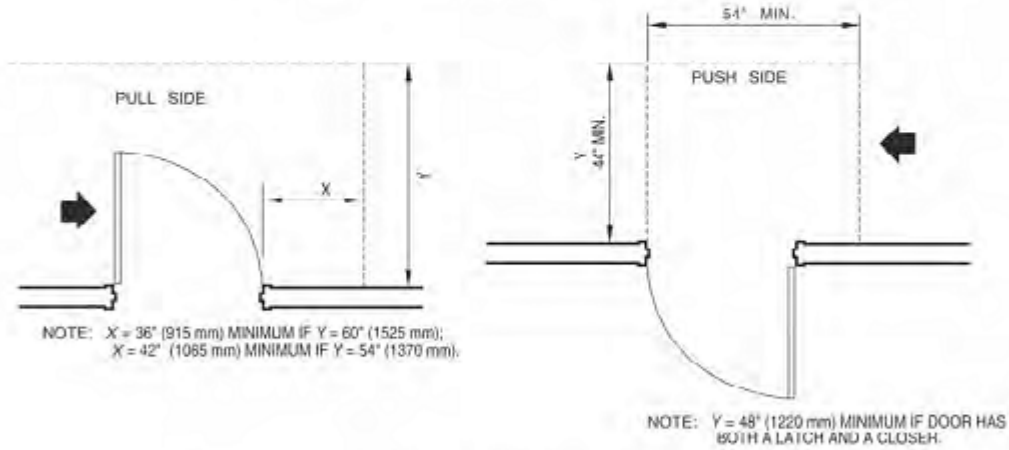

FIGURE 11A-8B—HINGE SIDE APPROACHES - SWINGING DOORS

THESE DIAGRAMS ILLUSTRATE THE SPECIFIC REQUIREMENTS OF THESE REGULATIONS AND ARE INTENDED ONLY AS AN AID FOR BUILDING DESIGN AND CONSTRUCTION.

LEVEL MANEUVERING CLEARANCE AT DOORS

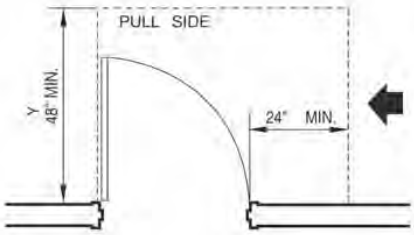

NOTE: Y = 54" (1370 mm) MINIMUM IF DOOR HAS A CLOSER.

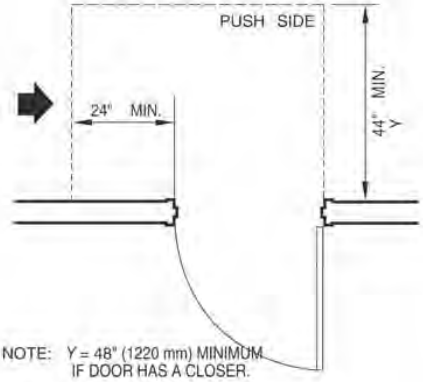

NOTE: Y = 48" (1220 mm) MINIMUM IF DOOR HAS A CLOSER.

FIGURE 11A-8C—LATCH SIDE APPROACHES - SWINGING DOORS

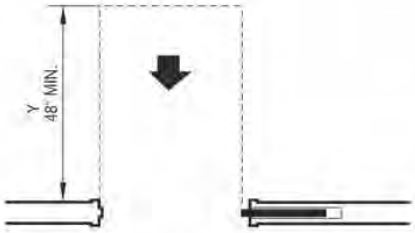

FIGURE 11A-8D—FRONT APPROACH - SLIDING DOORS AND FOLDING DOORS

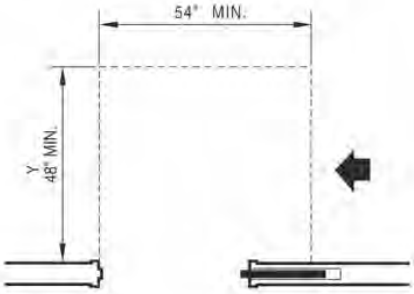

FIGURE 11A-8E—SLIDE-SIDE APPROACH - SLIDING DOORS AND FOLDING DOORS

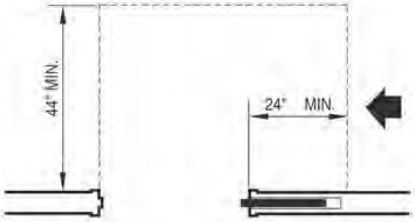

FIGURE 11A-8F—LATCH-SIDE APPROACH - SLIDING DOORS AND FOLDING DOORS

THESE DIAGRAMS ILLUSTRATE THE SPECIFIC REQUIREMENTS OF THESE REGULATIONS AND ARE INTENDED ONLY AS AN AID FOR BUILDING DESIGN AND CONSTRUCTION.

LEVEL MANEUVERING CLEARANCE AT DOORS (Continued)

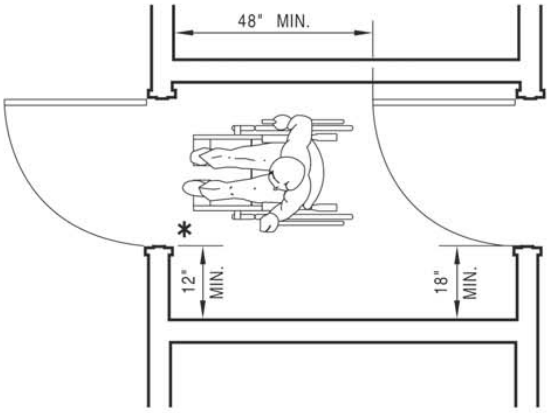

(a) DOOR IN SERIES

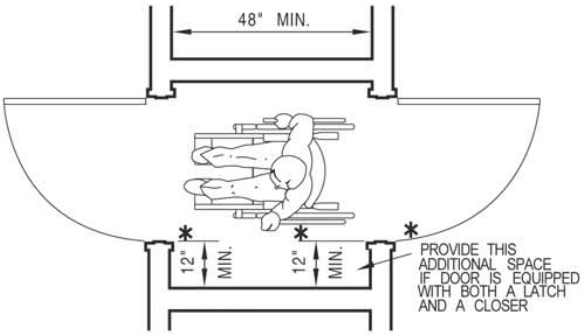

(b) BOTH DOORS OPEN OUT

(SERVING OTHER THAN A REQUIRED EXIT STAIRWAY)

THESE DIAGRAMS ILLUSTRATE THE SPECIFIC REQUIREMENTS OF THESE REGULATIONS AND ARE INTENDED ONLY AS AN AID FOR BUILDING DESIGN AND CONSTRUCTION.

FIGURE 11A-8G—VESTIBULE

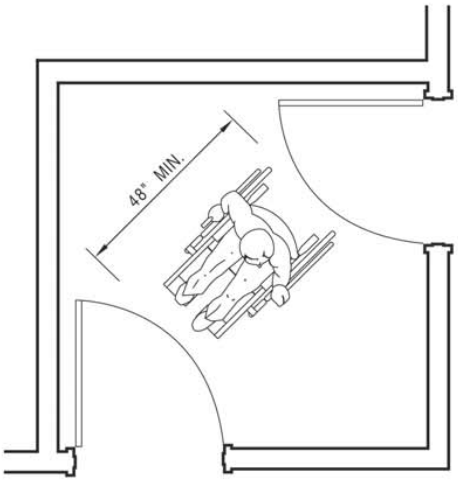

(a) DOORS AT ADJACENT WALLS

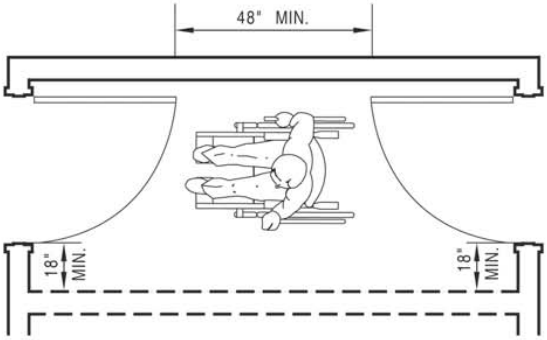

(b) DOORS AT OPPOSITE WALLS

THESE DIAGRAMS ILLUSTRATE THE SPECIFIC REQUIREMENTS OF THESE REGULATIONS AND ARE INTENDED ONLY AS AN AID FOR BUILDING DESIGN AND CONSTRUCTION.

FIGURE 11A-8H—VESTIBULE (SERVING OTHER THAN A REQUIRED EXIT STAIRWAY)

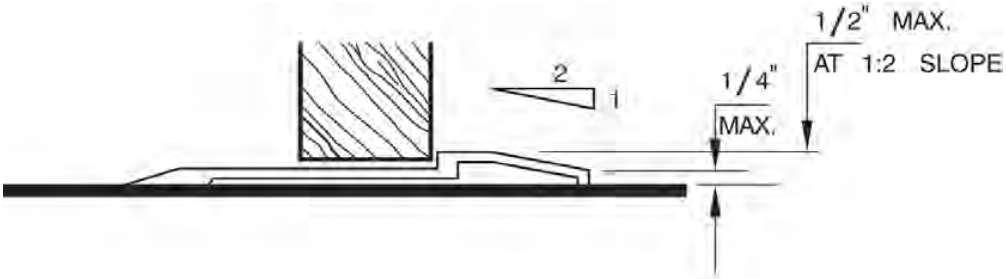

THESE DIAGRAMS ILLUSTRATE THE SPECIFIC REQUIREMENTS OF THESE REGULATIONS AND ARE INTENDED ONLY AS AN AID FOR BUILDING DESIGN AND CONSTRUCTION.

FIGURE 11A-8I—THRESHOLDS

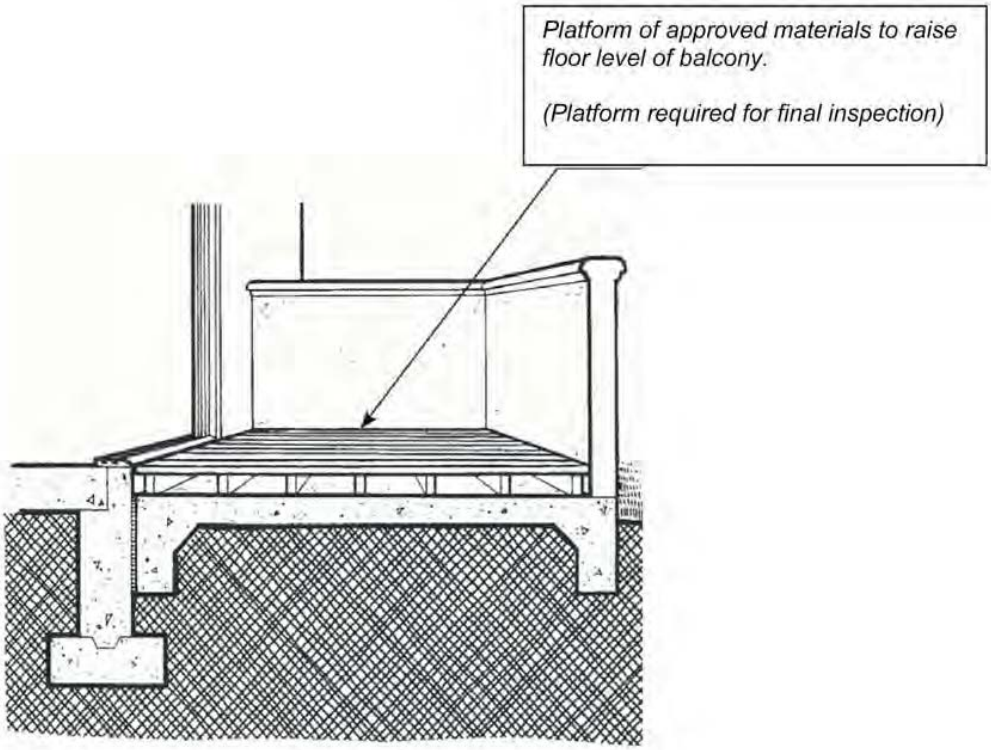

FIGURE 11A-8J—PLATFORM AT SECONDARY EXTERIOR DOOR

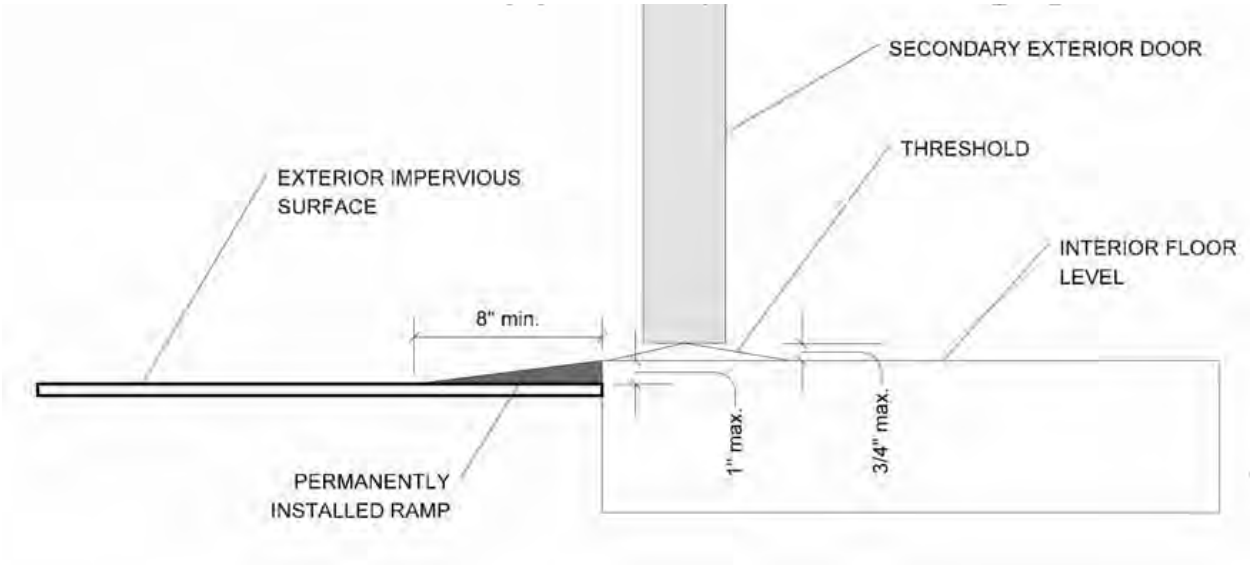

FIGURE 11A-8K—RAMP AT SECONDARY EXTERIOR DOOR

FIGURE 11A-9A—MULTIPLE ACCOMODATION TOILET FACILITY
(See Part 1 of this document for proposed amendment of this figure.)

FIGURE 11A-9B
(See Part 1 of this document for proposed amendment of this figure.)

FIGURE 11A-9C—GRAB BAR SECTION
(See Part 1 of this document for proposed amendment of this figure.)

FIGURE 11A-9D—KNEE CLEARANCE
(See Part 1 of this document for proposed amendment of this figure.)

FIGURE 11A-9E—CLEAR FLOOR SPACE AT BATHTUB
(See Part 1 of this document for proposed amendment of this figure.)

FIGURE 11A-9F—GRAB BARS AT BATHTUBS
(See Part 1 of this document for proposed amendment of this figure.)

FIGURE 11A-9G
(See Part 1 of this document for proposed amendment of this figure.)

FIGURE 11A-9H—ROLL-IN SHOWER
(See Part 1 of this document for proposed amendment of this figure.)

FIGURE 11A-9I—ROLL-IN SHOWER
(See Part 1 of this document for proposed amendment of this figure.)

FIGURE 11A-9J—OPEN SHOWER
(See Part 1 of this document for proposed amendment of this figure.)

FIGURE 11A-9K—ALTERNATIVE ROLL-IN
(See Part 1 of this document for proposed amendment of this figure.)

FIGURE 11A-9L—SHOWER WITH WATER CLOSET
(See Part 1 of this document for proposed amendment of this figure)

FIGURE 11A-9M—WING WALL OR CABINET AT WATER CLOSET
(See Part 1 of this document for proposed amendment of this figure)

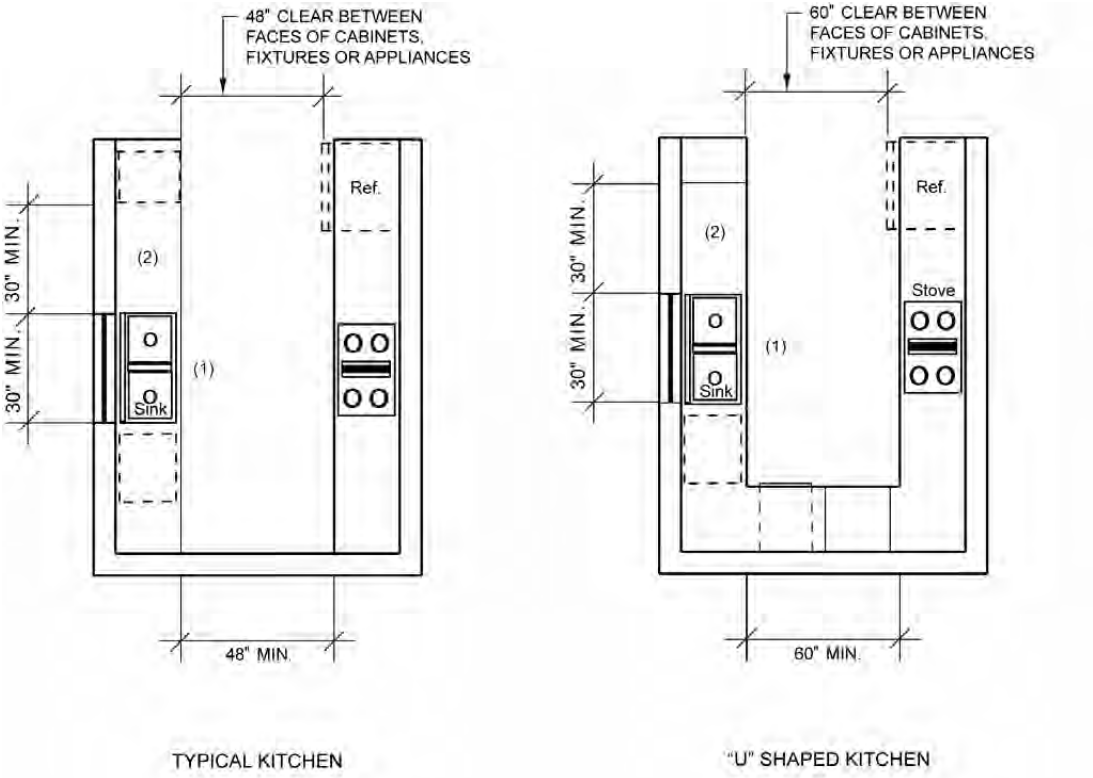

(1) 30-inch wide counter top space for sink installation with removable base cabinet and finish flooring beneath sink
(2) 30-inch wide counter top workspace
(3) 30-inch by 48-inch clear space adjacent to range or cooktop to allow parallel approach
(4) 30-inch by 48-inch either parallel approach at oven, dishwasher, trash compactor or refrigerator

FIGURE 11A-10A—KITCHEN SPECIFICATIONS

FIGURE 11A-11A—WATER FOUNTAINS
(See Part 1 of this document for proposed amendment of this figure)

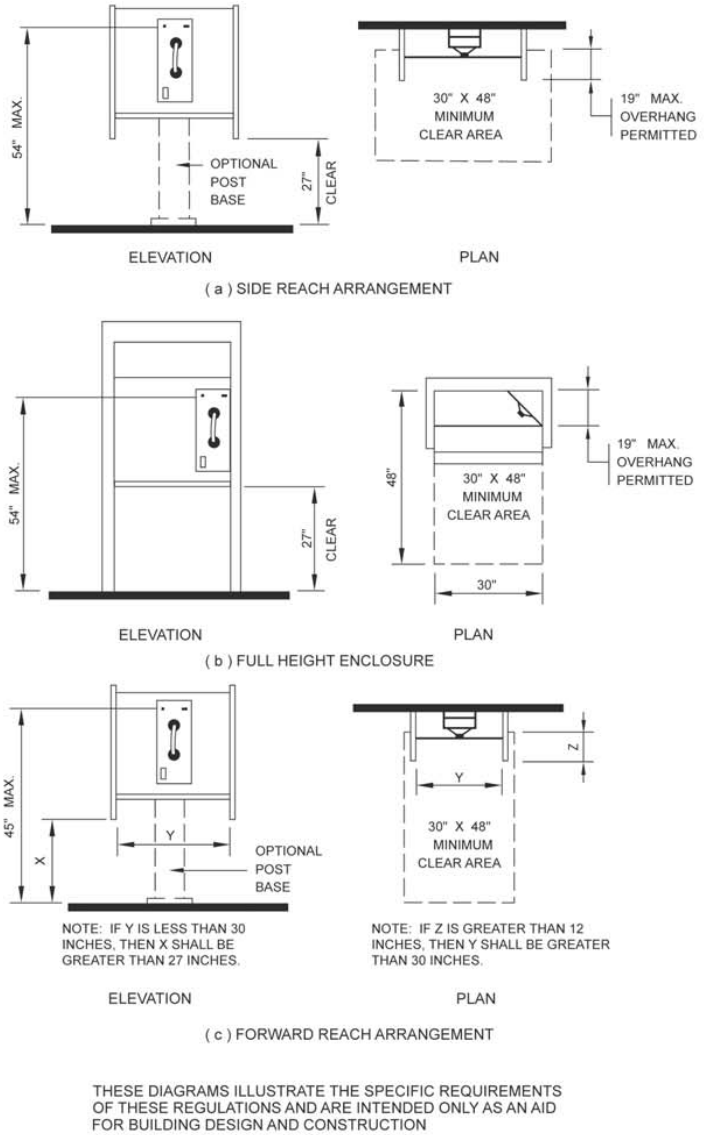

FIGURE 11A-11B—MOUNTING HEIGHTS AND CLEARANCES FOR TELEPHONES

FIGURE 11A-11C— INTERNATIONAL TTY SYMBOL

FIGURE 11A-11D— VOLUME CONTROL TELEPHONES

FIGURE 11A-11E— INTERNATIONAL SYMBOL OF ACCESS FOR HEARING LOSS

THESE DIAGRAMS ILLUSTRATE THE SPECIFIC REQUIREMENTS OF THESE REGULATIONS AND ARE INTENDED ONLY AS AN AID FOR BUILDING DESIGN AND CONSTRUCTION.