EXPRESS TERMS

FOR

PROPOSED EMERGENCY BUILDING STANDARDS

OF THE

DEPARTMENT OF HOUSING AND COMMUNITY DEVELOPMENT

REGARDING THE 2007 AND 2010 CALIFORNIA EXISTING BUILDING CODE, APPENDIX CHAPTER A3

CALIFORNIA CODE OF REGULATIONS, TITLE 24, PART 10

(SEISMIC STRENGTHENING)
HCD EF 02/10

The Department of Housing and Community Development (HCD) proposes to make necessary changes to both the 2007 and 2010 California Existing Building Code, based on the 2009 International Existing Building Code. HCD further proposes to:

- Repeal amendments to the model code that are no longer necessary, repeal or amend building standards that are not addressed by a model code;
- Adopt new necessary amendments to the model code; and/or
- Adopt new building standards that are not addressed by the model code.

LEGEND FOR EXPRESS TERMS:

1. **Existing California amendments or code language being modified:** *All such language shown in italics, modified language is underlined or shown in ~~strikeout~~.*

2. **IEBC language with new California amendments:** IEBC language shown in normal Arial 9 point; California amendments to IEBC text shown *underlined and in italics*.

3. **Repealed text**: All language shown in ~~strikeout.~~

4. **Amended, adopted or repealed language after public hearing:** Amended, adopted, or repealed language will appear in double underline and ~~double strikeout~~**.**

5. **Notation:** Authority and Reference citations are provided at the end of each chapter.

---

1. HCD proposes to adopt Appendix Chapter A3 (Sections A301.1 – A304.6) with amendments as follows:

APPENDIX CHAPTER A3

PRESCRIPTIVE PROVISIONS FOR SEISMIC STRENGTHENING OF CRIPPLE WALLS AND SILL PLATE ANCHORAGE OF LIGHT, WOOD-FRAME RESIDENTIAL BUILDINGS

SECTION A301
GENERAL

A301.1 Purpose. The provisions of this chapter are intended to promote public safety and welfare by reducing the risk of earthquake-induced damage to existing wood-frame residential buildings. The requirements contained in this chapter are prescriptive minimum standards intended to improve the seismic performance of residential buildings; however, they will not necessarily prevent earthquake damage.

This chapter sets standards for strengthening that may be approved by the *Enforcing Agency* ~~building official~~ without requiring plans or calculations prepared by *a registered design professional* ~~an architect or engineer~~. The provisions of this chapter are not intended to prevent the use of any material or method of construction not prescribed herein. The *Enforcing Agency* ~~building official~~ may require that construction documents for strengthening using alternative materials or methods be prepared by *a registered design professional* ~~an architect or engineer~~.

A301.2 Scope. The provisions of this chapter apply to residential buildings of light-frame wood construction ~~assigned to Seismic Design Category C, D or E of the International Building Code~~ containing one or more of the structural weaknesses specified in Section A303.

Exception: The provisions of this chapter do not apply to the buildings, or elements thereof, listed below. These buildings or elements require analysis by *a registered design professional* ~~an engineer or architect~~ in accordance with Section A301.3 to determine appropriate strengthening:

1. Group R-1, R-2 or R-4 occupancies with more than four dwelling units.

2. Buildings with a lateral-force-resisting system using poles or columns embedded in the ground.

3. Cripple walls that exceed 4 feet (1219 mm) in height.

4. Buildings exceeding three stories in height and any three-story building with cripple wall studs exceeding 14 inches (356 mm) in height.

5. Buildings where the *Enforcing Agency* ~~building official~~ determines that conditions exist that are beyond the scope of the prescriptive requirements of this chapter.

6. Buildings or portions thereof constructed on concrete slabs on grade.

~~The details and prescriptive provisions herein are not intended to be the only acceptable strengthening methods permitted. Alternative details and methods may be used when approved by the building official. Approval of alternatives shall be based on test data showing that the method or material used is at least equivalent in terms of strength, deflection and capacity to that provided by the prescriptive methods and materials.~~

~~The provisions of this chapter may be used to strengthen historic structures, provided they are not in conflict with other related provisions and requirements that may apply.~~

A301.3 Alternative design procedures. *The details and prescriptive provisions herein are not intended to be the only acceptable strengthening methods permitted. Alternative details and methods may be used where designed by a registered design professional or approved by the code official. Where approved by the Enforcing Agency, alternative prescriptive standards that address one or more of the weaknesses listed in Section A303 may be used. Approval of alternatives shall be based on a demonstration that the method or material used is at least equivalent in terms of strength, deflection and capacity to that provided by the prescriptive methods and materials.*

Where ~~When~~ analysis by *a registered design professional* ~~an engineer or architect~~ is required ~~in accordance with Section A301.2,~~ such analysis shall be in accordance with all requirements of the building code, except that the *seismic forces* ~~base shear~~ may be taken as 75 percent of *those* ~~the horizontal forces~~ specified in the building code.

SECTION A302
DEFINITIONS

For the purpose of this chapter, in addition to the applicable definitions in the building code, certain additional terms are defined as follows:

ADHESIVE ~~**CHEMICAL**~~ **ANCHOR.** An assembly consisting of a threaded rod, washer, nut, and chemical adhesive approved by the *Enforcing Agency* ~~building official~~ for installation in existing concrete or masonry.

~~**COMPOSITE PANEL.** A wood structural panel product composed of a combination of wood veneer and wood-based material, and bonded with waterproof adhesive.~~

CRIPPLE WALL. A wood-frame stud wall extending from the top of the foundation to the underside of the lowest floor framing.

ENFORCING AGENCY. *The designated department or agency as specified by statute or regulation.*

EXPANSION ~~BOLT~~ *ANCHOR*. ~~A single assembly approved by the building official for installation in existing concrete or masonry. For the purpose of this chapter, expansion bolts shall contain a base designed to expand when properly set, wedging the bolt in the pre-drilled hole. Assembly shall also include appropriate washer and nut~~. *An approved post-installed anchor, inserted into a pre-drilled hole in existing concrete or masonry, that transfers loads to or from the concrete or masonry by direct bearing or friction or both.*

~~**ORIENTED STRAND BOARD (OSB).** A mat-formed wood structural panel product composed of thin rectangular wood strands or wafers arranged in oriented layers and bonded with waterproof adhesive.~~

PERIMETER FOUNDATION. A foundation system that is located under the exterior walls of a building.

~~**PLYWOOD.** A wood structural panel product composed of sheets of wood veneer bonded together with the grain of adjacent layers oriented at right angles to one another.~~

SNUG-TIGHT. As tight as an individual can torque a nut on a bolt by hand, using a wrench with a 10-inch-long (254 mm) handle, and the point at which the full surface of the plate washer is contacting the wood member and slightly indenting the wood surface.

~~**WAFERBOARD.** A mat-formed wood structural panel product composed of thin rectangular wood wafers arranged in random layers and bonded with waterproof adhesive.~~

WOOD STRUCTURAL PANEL. *A panel manufactured from veneers, wood strands or wafers or a combination of veneer and wood strands or wafers bonded together with waterproof synthetic resins or other suitable bonding systems. Examples of wood structural panels are:*

> ***Composite panels.*** *A wood structural panel that is comprised of wood veneer and reconstituted wood-based material and bonded together with waterproof adhesive;*
>
> ***Oriented strand board (OSB).*** *A mat-formed wood structural panel comprised of thin rectangular wood strands arranged in cross-aligned layers with surface layers normally arranged in the long panel direction and bonded with waterproof adhesive; or*
>
> ***Plywood.*** *A wood structural panel comprised of plies of wood veneer arranged in cross-aligned layers. The plies are bonded with waterproof adhesive that cures on application of heat and pressure.*

~~**WOOD STRUCTURAL PANEL.** A structural panel product composed primarily of wood and meeting the requirements of United States Voluntary Product Standard PS 1 and United States Voluntary Product Standard PS 2. Wood structural panels include all-veneer plywood, composite panels containing a combination of veneer and wood-based material, and mat-formed panels such as oriented strand board and waferboard.~~

SECTION A303
STRUCTURAL WEAKNESSES

For the purpose of this chapter, structural weaknesses shall be *one or more of the conditions* as specified below.

1. Sill plates or floor framing that are supported directly on the ground without *a foundation system that conforms to the building code* ~~an approved foundation system~~.

2. A perimeter foundation system that is constructed only of wood posts supported on isolated pad footings.

3. Perimeter foundation systems that are not continuous.

   Exceptions:

   1. Existing single-story exterior walls not exceeding 10 feet (3048 mm) in length, forming an extension of floor area beyond the line of an existing continuous perimeter foundation.

   2. Porches, storage rooms and similar spaces not containing fuel-burning appliances.

4. A perimeter foundation system that is constructed of unreinforced masonry or stone.

5. Sill plates that are not connected to the foundation or that are connected with less than what is required by the building code.

   Exception: When approved by the *Enforcing Agency* ~~building official~~, connections of a sill plate to the foundation made with other than sill bolts may be accepted if the capacity of the connection is equivalent to that required by the building code.

6. Cripple walls that are not braced in accordance with the requirements of Section A304.4 and Table A3-A, or cripple walls not braced with diagonal sheathing or wood structural panels in accordance with the building code.

SECTION A304
STRENGTHENING REQUIREMENTS

A304.1 General.

A304.1.1 Scope. The structural weaknesses noted in Section A303 shall be strengthened in accordance with the requirements of this section. Strengthening work may include both new construction and alteration of existing construction. Except as provided herein, all strengthening work and materials shall comply with the applicable provisions of the building code. ~~Alternative methods of strengthening may be used, provided such systems are designed by an engineer or architect and are approved by the building official.~~

A304.1.2 Condition of existing wood materials. All existing wood materials that will be a part of the strengthening work (sills, studs, sheathing, etc.) shall be in a sound condition and free from defects that substantially reduce the capacity of the member. Any wood material found to contain fungus infection shall be removed and replaced with new material. Any wood material found to be infested with insects or to have been infested with insects shall be strengthened or replaced with new materials to provide a net dimension of sound wood at least equal to its undamaged original dimension.

A304.1.3 Floor joists not parallel to foundations. Floor joists framed perpendicular or at an angle to perimeter foundations shall be restrained either by an existing nominal 2-inch-wide (51 mm) continuous rim joist or by a nominal 2-inch-wide (51 mm) full-depth blocking between alternate joists in one-and two-story buildings, and between each joist in three-story buildings. Existing blocking for multistory buildings must occur at each joist space above a braced cripple wall panel.

Existing connections at the top and bottom edges of an existing rim joist or blocking need not be verified in one-story buildings. In multistory buildings, the existing top edge connection need not be verified; however, the bottom edge connection to either the foundation sill plate or the top plate of a cripple wall shall be verified. The minimum existing bottom edge connection shall consist of 8d toenails spaced 6 inches (152 mm) apart for a continuous rim joist, or three 8d toenails per block. When this minimum bottom edge-connection is not present or cannot be verified, a supplemental connection installed as shown in ~~Figure A3-8~~ *Figure A3-8A or A3-8C* shall be provided. Where an existing continuous rim joist or the minimum existing blocking does not occur, new ¾-inch *or 23/32" (*19 mm) wood structural panel blocking installed tightly between floor joists and nailed as shown in Figure ~~A3-8~~ *A3-9* shall be provided at the inside face of the cripple wall. In lieu of ~~3/4 inch (19 mm)~~ wood structural panel blocking, tight fitting, full depth 2-inch (51 mm) blocking may be used. New blocking may be omitted where it will interfere with vents or plumbing that penetrates the wall.

A304.1.4 Floor joists parallel to foundations. Where existing floor joists are parallel to the perimeter foundations, the end joist shall be located over the foundation and, except for required ventilation openings, shall be continuous and in continuous contact with the foundation sill plate or the top plate of the cripple wall. Existing connections at the top and bottom edges of the end joist need not be verified in one-story buildings. In multistory buildings, the existing top edge connection of the end joist need not be verified; however, the bottom edge connection to either the foundation sill plate or the top plate of a cripple wall shall be verified. The minimum bottom edge connection shall be 8d toenails spaced 6 inches (152 mm) apart. If this minimum bottom edge connection is not present or cannot be verified, a supplemental connection installed as shown in ~~Figure A3-9~~ *Figures A3-8B, A3-8C, or A3-9* shall be provided.

A304.2 Foundations.

A304.2.1 New perimeter foundations. New perimeter foundations shall be provided for structures with the structural weaknesses noted in Items 1 and 2 of Section A303. Soil investigations or geotechnical studies are not required for this work unless the building is located in a special study zone as designated by the jurisdiction or other public agency.

A304.2.2 *Evaluation of existing foundations* ~~**Foundation evaluation by an engineer or architect.**~~ Partial perimeter foundations or unreinforced masonry foundations shall be evaluated by *a registered design professional* ~~an engineer or architect~~ for the force levels *specified* ~~noted~~ in Section A301.3. Test reports or other substantiating data to determine existing foundation material strengths shall be submitted *to the Enforcing Agency* ~~for review~~. *Where* ~~When~~ approved by the *Enforcing Agency* ~~building official~~, these *existing* foundation systems may be strengthened in accordance with the recommendations included with the evaluation in lieu of being replaced.

Exception: In lieu of testing existing foundations to determine material strengths, and *where* ~~when~~ approved by the *Enforcing Agency* ~~building official~~, a new nonperimeter foundation system designed for the forces *specified* ~~noted~~ in Section A301.3 may be used to resist ~~all exterior wall~~ lateral forces *from perimeter walls*. *A registered design professional shall confirm the ability of the existing diaphragm to transfer seismic forces to the new nonperimeter foundations.*

A304.2.3 Details for new perimeter foundations. All new perimeter foundations shall be continuous and constructed according to ~~one of the details shown in~~ *either* Figure A3-1 or A3-2. *All new construction materials shall comply with the requirements of the building code. Where approved by the Enforcing Agency, the existing clearance between existing floor joists or girders and existing grade below the floor need not comply with the building code.*

Exception~~s~~:

~~1. When approved by the building official, the existing clearance between existing floor joists or girders and existing grade below the floor need not comply with the building code.~~

~~2.~~ *Where designed by a registered design professional and* ~~When~~ approved by the *Enforcing Agency* ~~building official, and when designed by an engineer or architect~~, partial perimeter foundations may be used in lieu of a continuous perimeter foundation.

A304.2.4 *New concrete foundations* ~~**Required compressive strength.**~~ New concrete foundations shall have a minimum compressive strength of 2,500 pounds per square inch (17.24 MPa) at 28 days.

A304.2.5 New hollow-unit masonry foundations. New hollow-unit masonry foundations shall be solidly grouted. *The grout shall have minimum compressive strength of 2,000 pounds per square inch (13.79 MPa).* Mortar shall be Type M or S~~, and the grout and masonry units shall comply with the building code~~.

~~**A304.2.6 Reinforcing steel.** Reinforcing steel shall comply with the requirements of the building code.~~

A304.2.6 New sill plates. *Where new sill plates are used in conjunction with new foundations, they shall be minimum 2x nominal thickness and shall be preservative-treated wood or naturally durable wood permitted by the building code for similar applications, and shall be marked or branded by an approved agency. Fasteners in contact with preservative-treated wood shall be hot-dip galvanized or other material permitted by the building code for similar applications. Metal framing anchors in contact with preservative-treated wood shall be galvanized in accordance with ASTM A653 with a G185 coating.*

A304.3 Foundation sill plate anchorage.

A304.3.1 Existing perimeter foundations. *Where* ~~When~~ the building has an existing continuous perimeter foundation, all perimeter wall sill plates shall be *anchored* ~~bolted~~ to the foundation with *adhesive* ~~chemical~~ anchors or expansion *anchors* ~~bolts~~ in accordance with Table A3-A.

Anchors ~~or bolts~~ shall be installed in accordance with Figure A3-3, with the plate washer installed between the nut and the sill plate. The nut shall be tightened to a snug-tight condition after curing is complete for *adhesive* ~~chemical~~ anchors and after expansion wedge engagement for expansion ~~bolts~~ *anchors*. *All anchors shall be installed in accordance with manufacturer's recommendations.* ~~The installation of nuts on all bolts shall be subject to verification by the building official.~~ Where existing conditions prevent anchor ~~or bolt~~ installations through the sill plate, this connection may be made in accordance with Figure A3-4A, A3-4B, or A3-4C. The spacing of these alternate connections shall comply with the maximum spacing requirements of Table A3-A. Expansion *anchors* ~~bolts~~ shall not be used *where* ~~when~~ the installation causes surface cracking of the foundation wall at the location of the *anchor* ~~bolt~~.

A304.3.2 Placement of ~~chemical~~ anchors ~~and expansion bolts.~~ ~~Chemical anchors or expansion bolts~~ *Anchors* shall be placed within 12 inches (305 mm), but not less than 9 inches (229 mm), from the ends of sill plates and shall be placed in the center of the stud space closest to the required spacing. New sill plates may be installed in pieces ~~when~~ *where* necessary because of existing conditions. For lengths of sill plate *12 feet (3658 MM) or* greater ~~than 12 feet (3658 mm)~~, *anchors* ~~or bolts~~ shall be spaced along the sill plate as *specified* ~~noted~~ in Table A3-A. For other lengths of sill plate, ~~see~~ *anchor placement shall be in accordance with* Table A3-B. ~~For lengths of sill plate less than 30 inches (762 mm), a minimum of one anchor or bolt shall be installed.~~

Exception: Where physical obstructions such as fireplaces, plumbing or heating ducts interfere with the placement of an anchor ~~or bolt~~, the anchor ~~or bolt~~ shall be placed as close to the obstruction as possible, but not less than 9 inches (229 mm) from the end of the plate. Center-to-center spacing of the anchors ~~or bolts~~ shall be reduced as necessary to provide the minimum total number of anchors required based on the full length of the wall. Center-to-center spacing shall not be less than 12 inches (305 mm).

A304.3.3 New perimeter foundations. Sill plates for new perimeter foundations shall be ~~bolted as required by~~ *anchored in accordance with* Table A3-A and as shown in Figure A3-1 or A3-2.

A304.4 Cripple wall bracing.

A304.4.1 General. Exterior cripple walls not exceeding 4 feet (1219 mm) in height shall ~~use~~ *be permitted to be specified by* the prescriptive bracing method *in Section A304.4* ~~listed below~~. Cripple walls over 4 feet (1219 mm) in height require analysis by *a registered design professional* ~~an engineer or architect~~ in accordance with Section A301.3.

A304.4.1.1 Sheathing installation requirements. Wood structural panel sheathing shall not be less than 15/32-inch (12 mm) thick and shall be installed in accordance with Figure A3-5 or A3-6. All individual pieces of wood structural panels shall be nailed with 8d common nails spaced 4 inches (102 mm) on center at all edges and 12 inches (305 mm) on center at each intermediate support with not less than two nails for each stud. Nails shall be driven so that their heads are flush with the surface of the sheathing and shall penetrate the supporting member a minimum of 1 ½ inches (38 mm). When a nail fractures the surface, it shall be left in place and not counted as part of the required nailing. A new 8d nail shall be located within 2 inches (51 mm) of the discounted nail and be hand-driven flush with the sheathing surface. ~~All horizontal~~ *Where the installation involves horizontal joints, those* joints ~~must~~ *shall* occur over nominal 2-inch by 4-inch (51 mm by 102 mm) blocking installed with the nominal 4-inch (102 mm) dimension against the face of the plywood.

Vertical joints at adjoining pieces of wood structural panels shall be centered on ~~existing~~ studs such that there is a minimum 1/8 inch (3.2 mm) between the panels~~, and such that the nails are placed a minimum of ½ inch (12.7 mm) from the edges of the existing stud~~. Where such edge distances cannot be maintained because of the width of the existing stud, a new stud shall be added adjacent to the existing studs and connected in accordance with Figure A3-7.

A304.4.2 Distribution and amount of bracing. See Table A3-A and Figure A3-10 for the distribution and amount of bracing required for each wall line. Each braced panel length must be at least two times the height of the cripple stud. Where the minimum amount of bracing prescribed in Table A3-A cannot be installed along any walls, the bracing must be designed in accordance with Section A301.3.

Exception: Where physical obstructions such as fireplaces, plumbing or heating ducts interfere with the placement of cripple wall bracing, the bracing shall then be placed as close to the obstruction as possible. The total amount of bracing required shall not be reduced because of obstructions.

A304.4.3 Stud space ventilation. When bracing materials are installed on the interior face of studs forming an enclosed space between the new bracing and the existing exterior finish, each braced stud space must be ventilated. Adequate ventilation and access for future inspection shall be provided by drilling one 2-inch to 3-inch–diameter (51 mm to 76 mm) round hole through the sheathing, nearly centered between each stud at the top and bottom of the cripple wall. Such holes should be spaced a minimum of 1 inch (25 mm) clear from the sill or top plates. In stud spaces containing sill bolts, the hole shall be located on the center line of the sill bolt but not closer than 1 inch (25 mm) clear from the nailing edge of the sheathing. When existing blocking occurs within the stud space, additional ventilation holes shall be placed above and below the blocking, or the existing block shall be removed and a new nominal 2-inch by 4-inch (51 mm by 102 mm) block shall be installed with the nominal 4-inch (102 mm) dimension against the face of the plywood. For stud heights less than 18 inches (457 mm), only one ventilation hole need be provided.

A304.4.4 Existing underfloor ventilation. Existing underfloor ventilation shall not be reduced without providing equivalent new ventilation as close to the existing ventilation as possible. Braced panels may include underfloor ventilation openings when the height of the opening, measured from the top of the foundation wall to the top of the opening, does not exceed 25 percent of the height of the cripple stud wall; however, the length of the panel shall be increased a distance equal to the length of the opening or one stud space minimum. Where an opening exceeds 25 percent of the cripple wall height, braced panels shall not be located where the opening occurs. See Figure A3-7.

Exception: For homes with a post and pier foundation system where a new continuous perimeter foundation system is being installed, new ventilation shall be provided in accordance with the building code.

A304.5 *Inspections* ~~Quality control~~. All work shall be subject to inspection by the *Enforcing Agency* ~~building official~~ including, but not limited to:

1. Placement and installation of new ~~*chemical anchors or expansion bolts*~~ *adhesive or expansion anchors* installed in existing foundations. Special inspection *may be* ~~is not~~ required for ~~chemical~~ *adhesive* anchors installed in existing foundations regulated by the prescriptive provisions of this chapter.

2. Installation and nailing of new cripple wall bracing.

3. Any work may be subject to special inspection when required by the *Enforcing Agency* ~~building official~~ in accordance with the building code.

A304.5.1 Nails. *All nails specified in this chapter shall be common wire nails of the following diameters and lengths: 8d nails shall be 0.131" x 2 ½". 10d nails shall be 0.148" x 3". 12d nails shall be 0.148" x 3 ¼". 16d nails shall be 0.162" x 3 ½". Nails used to attach metal framing connectors directly to wood members shall be as specified by the connector manufacturer in an approved report.*

A304.6 Phasing of the strengthening work. When approved by the *Enforcing Agency* ~~building official~~, the strengthening work contained in this chapter may be completed in phases. ~~The strengthening work in any phase shall be performed on two parallel sides of the structure at the same time.~~

TABLE A3-A—SILL PLATE ANCHORAGE AND CRIPPLE WALL BRACING

NUMBER OF STORIES ABOVE CRIPPLE WALLS	MINIMUM SILL PLATE CONNECTION AND MAXIMUM SPACING [a, b]	AMOUNT OF BRACING FOR EACH WALL LINE [c,d,e]	
		A Combination of Exterior Walls Finished with Portland Cement Plaster and Roofing Using Clay Tile or Concrete Tile Weighing More than 6 psf (287 N/m^2)	All Other Conditions
One story	1/2 inch (12.7 mm) spaced 6 feet, 0 inch (1829 mm) center-to-center with washer plate	Each end and not less than 50 percent of the wall length	Each end and not less than 40 percent of the wall length
Two stories	1/2 inch (12.7 mm) spaced 4 feet, 0 inch (1219 mm) center-to-center with washer plate; or 5/8 inch (15.9 mm) spaced 6 feet, 0 inch (1829 mm) center-to-center with washer plate	Each end and not less than 70 percent of the wall length	Each end and not less than 50 percent of the wall length
Three stories	5/8 inch (15.9 mm) spaced 4 feet, 0 inch (1219 mm) center-to-center with washer plate	100 percent of the wall length [f]	Each end and not less than 80 percent of the wall length [f]

a. Sill plate anchors shall be *adhesive* ~~chemical~~ anchors or expansion *anchors* ~~bolts~~ in accordance with Section A304.3.1.
b. All washer plates shall be *3 inches by 3 inches by .229 inch (76 mm x 76 mm x 5.8 mm)* ~~(2 inches by 2 inches by 3/16 inch (51 mm by 51 mm by 4.8 mm)~~ minimum.
c. See Figure A3–10 for braced panel layout.
d. Braced panels at ends of walls shall be located as near to the end as possible.
e. All panels along a wall shall be nearly equal in length and shall be nearly equal in spacing along the length of the wall.
f. The minimum required underfloor ventilation openings are permitted in accordance with Section A304.4.4.

TABLE A3-B—SILL PLATE ANCHORAGE FOR VARIOUS LENGTHS OF SILL PLATE [a,b]

	LENGTHS OF SILL PLATE		
NUMBER OF STORIES	Less than 12 feet (3658 mm) to 6 feet (1829 mm)	Less than 6 feet (1829 mm) to 30 inches (762 mm)	Less than 30 inches ~~footnote~~ (762 mm) [c]
One story	Three connections	Two connections	One connection
Two stories	Four connections for 1/2-inch (12.7 mm) anchors or bolts or Three connections for 5/8-inch (15.9 mm) anchors or bolts	Two connections	One connection
Three stories	Four connections	Two connections	One connection

a. Connections shall be either chemical anchors or expansion *anchors* ~~bolts~~.
b. See Section A304.3.2 for minimum end distances.
c. Connections shall be placed as near to the center of the length of plate as possible.

TABLE A3–C–NOT USED

2. HCD proposes to delete Figures A3-1 through A3-9 as follows:

~~FIGURE A3-1 – NEW REINFORCED CONCRETE FOUNDATION SYSTEM~~

~~FIGURE A3-2 – NEW HOLLOW-MASONRY UNIT FOUNDATION WALL~~

~~FIGURE A3-3 – SILL PLATE BOLTING TO EXISTING FOUNDATION~~

~~FIGURE A3-4A – SILL PLATE BOLTING IN EXISTING FOUNDATION – ALTERNATE~~

~~FIGURE A3-4B – SILL PLATE BOLTING TO EXISTING FOUNDATION WITHOUT CRIPPLE WALL AND FRAMING PARALLEL TO THE FOUNDATION WALL~~

~~FIGURE A3-4C – SILL PLATE BOLTING IN EXISTING FOUNDATION – ALTERNATE~~

~~FIGURE A3-5 – CRIPPLE WALL BRACING WITH WOOD STRUCTURAL PANEL ON EXTERIOR FACE OF CRIPPLE STUDS~~

~~FIGURE A3-6 – CRIPPLE WALL BRACING WITH WOOD STRUCTURAL PANEL ON INTERIOR FACE OF CRIPPLE STUDS~~

~~FIGURE A3-7 – PARTIAL CRIPPLE STUD WALL ELEVATION~~

~~FIGURE A3-8 – ALTERNATE BLOCKING WHERE RIM JOIST OR BLOCKING HAS BEEN OMITTED~~

~~FIGURE A3-9 – CONNECTION OF CRIPPLE WALL TO FLOOR SHEATHING WHEN FLOOR FRAMING IS PARALLEL TO WALL~~

---

3. HCD proposes to adopt new Figures A3-1 through A3-9 as follows:

FIGURE A3-1 – NEW REINFORCED CONCRETE FOUNDATION SYSTEM

FIGURE A3-2 – NEW CONCRETE MASONRY FOUNDATION

FIGURE A3-3 – SILL PLATE BOLTING TO EXISTING FOUNDATION

FIGURE A3-4A – ALTERNATE SILL PLATE BOLTING IN EXISTING FOUNDATION WITHOUT CRIPPLE WALLS AND FLOOR FRAMING NOT PARALLEL TO FOUNDATIONS

FIGURE A3-4B – ALTERNATE SILL PLATE ANCHOR TO EXISTING FOUNDATION WITHOUT CRIPPLE WALL AND FLOOR FRAMING PARALLEL TO FOUNDATIONS

FIGURE A3-4C – SILL PLATE ANCHORING TO EXISTING FOUNCATION ALTERNATE

FIGURE A3-5 – CRIPPLE WALL BRACING WITH NEW WOOD STRUCTURAL PLANEL ON EXTERIOR FACE OF CRIPPLE STUDS

FIGURE A3-6 – CRIPPLE WALL BRACING WITH WOOD STRUCTURAL PANEL ON INTERIOR FACE OF CRIPPLE STUDS

FIGURE A3-7– PARTIAL CRIPPLE STUD WALL ELEVATION

FIGURE A3-8A – TYPICAL FLOOR TO CRIPPLE WALL CONNECTION (FLOOR JOISTS NOT PARALLEL TO FOUNDATIONS)

FIGURE A3-8B – TYPICAL FLOOR TO CRIPPLE WALL CONNECTION (FLOOR JOISTS PARALLEL TO FOUNDATIONS)

FIGURE A3-8C – TYPICAL FLOOR TO MUDSILL CONNECTIONS

FIGURE A3-9 – ALTERNATE FLOOR FRAMING TO CRIPPLE WALL CONNECTION

NUMBER OF STORIES	MINIMUM FOUNDATION DIMENSIONS					MINIMUM FOUNDATION REINFORCING	
	W	F	D[A, B, C]	T	H	VERTICAL REINFORCING	
						SINGLE-POUR WALL AND FOOTING	FOOTING PLACED SEPARATE FROM WALL
1	12 INCHES (305mm)	6 INCHES (152mm)	12 INCHES (305mm)	6 INCHES (152mm)	≤24 INCHES (610mm)	#4 @ 48" (1219mm) ON CENTER	#4 @ 32" (813mm) ON CENTER
2	15 INCHES (381mm)	7 INCHES (178mm)	18 INCHES (457mm)	8 INCHES (203mm)	≥36 INCHES (914mm)	#4 @ 48" (1219mm) ON CENTER	#4 @ 32" (813mm) ON CENTER
3	18 INCHES (457mm)	8 INCHES (203mm)	24 INCHES (610mm)	10 INCHES (254mm)	≥36 INCHES (914mm)	#4 @ 48" (1219mm) ON CENTER	#4 @ 18" (457mm) ON CENTER

A. WHERE FROST CONDITIONS OCCUR, THE MINIMUM DEPTH SHALL EXTEND BELOW THE FROST LINE.

B. THE GROUND SURFACE ALONG THE INTERIOR SIDE OF THE FOUNDATION MAY BE EXCAVATED TO THE ELEVATION OF THE TOP OF THE FOOTING.

C. WHEN EXPANSIVE SOIL IS KNOWN TO EXIST ~~ENCOUNTERED~~, THE FOUNDATION DEPTH AND REINFORCEMENT SHALL BE AS APPROVED ~~DIRECTED~~ BY THE ENFORCING AGENCY ~~BUILDING OFFICIAL~~.

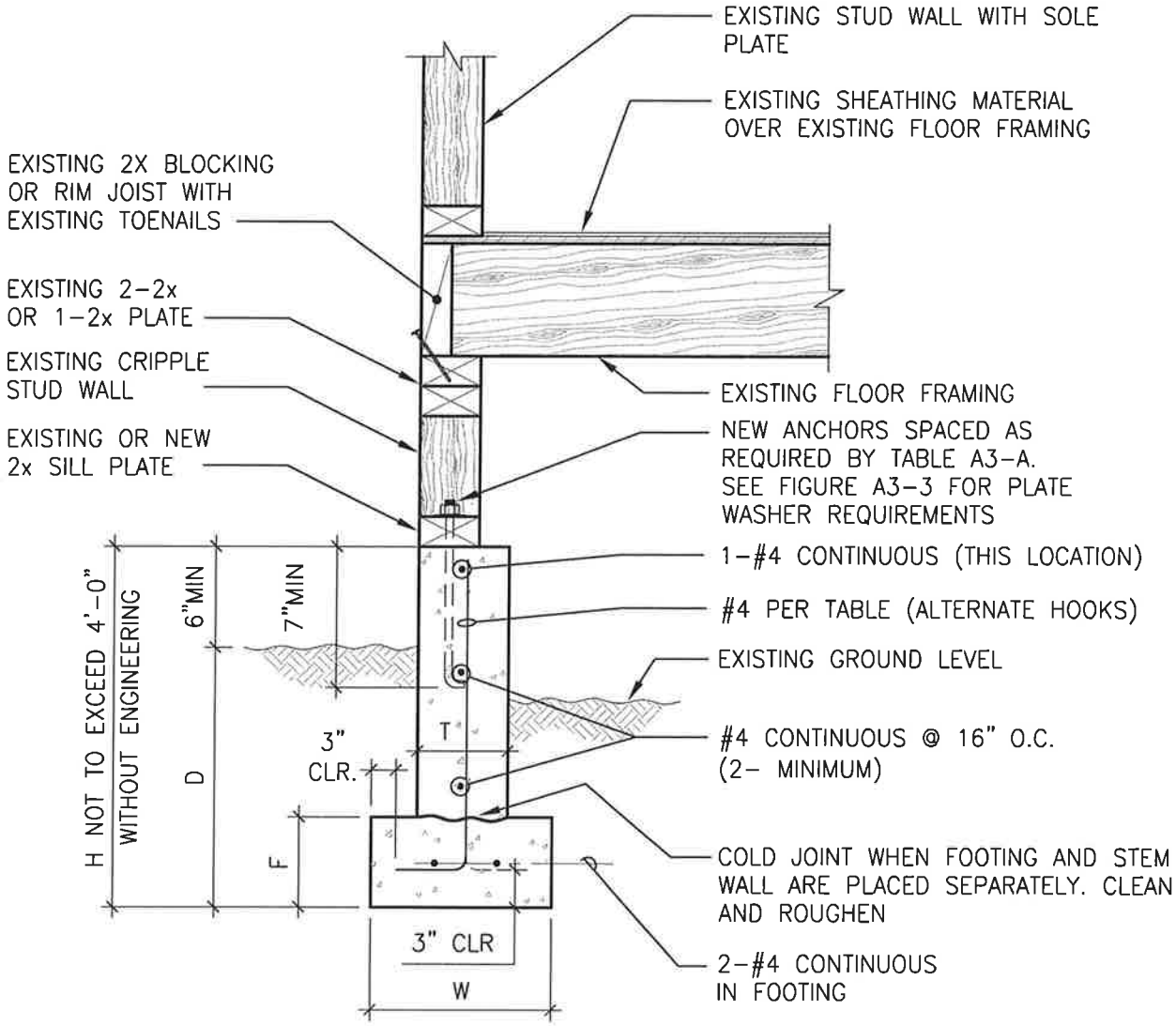

FOR SI: 1 INCH = 25.4mm, 1 FOOT = 304.8mm

FIGURE A3-1 – NEW REINFORCED CONCRETE FOUNDATION SYSTEM

MINIMUM FOUNDATION DIMENSIONS						MINIMUM FOUNDATION REINFORCING	
NUMBER OF STORIES	W	F	D[A, B, C]	T	H	VERTICAL REINFORCING	HORIZONTAL REINFORCING
1	12 INCHES (305mm)	6 INCHES (152mm)	12 INCHES (305mm)	6 INCHES (152mm)	≤24 INCHES (610mm)	#4 @ 24" (610mm) ON CENTER	#4 CONTINUOUS AT TOP OF STEM WALL
2	15 INCHES (381mm)	7 INCHES (178mm)	18 INCHES (457mm)	8 INCHES (203mm)	≥24 INCHES (610mm)	#4 @ 24" (610mm) ON CENTER	#4 @ 16" (406mm) ON CENTER
3	18 INCHES (457mm)	8 INCHES (203mm)	24 INCHES (610mm)	10 INCHES (254mm)	≥36 INCHES (914mm)	#4 @ 24" (610mm) ON CENTER	#4 @ 16" (406mm) ON CENTER

A. WHERE FROST CONDITIONS OCCUR, THE MINIMUM DEPTH SHALL EXTEND BELOW THE FROST LINE.

B. THE GROUND SURFACE ALONG THE INTERIOR SIDE OF THE FOUDATION MAY BE EXCAVATED TO THE ELEVATION OF THE TOP OF THE FOOTING.

C. WHEN EXPANSIVE SOIL IS KNOWN TO EXIST ~~ENCOUNTERED~~, THE FOUNDATION DEPTH AND REINFORCEMENT SHALL BE AS APPROVED ~~DIRECTED~~ BY THE ENFORCING AGENCY ~~BUILDING OFFICIAL~~.

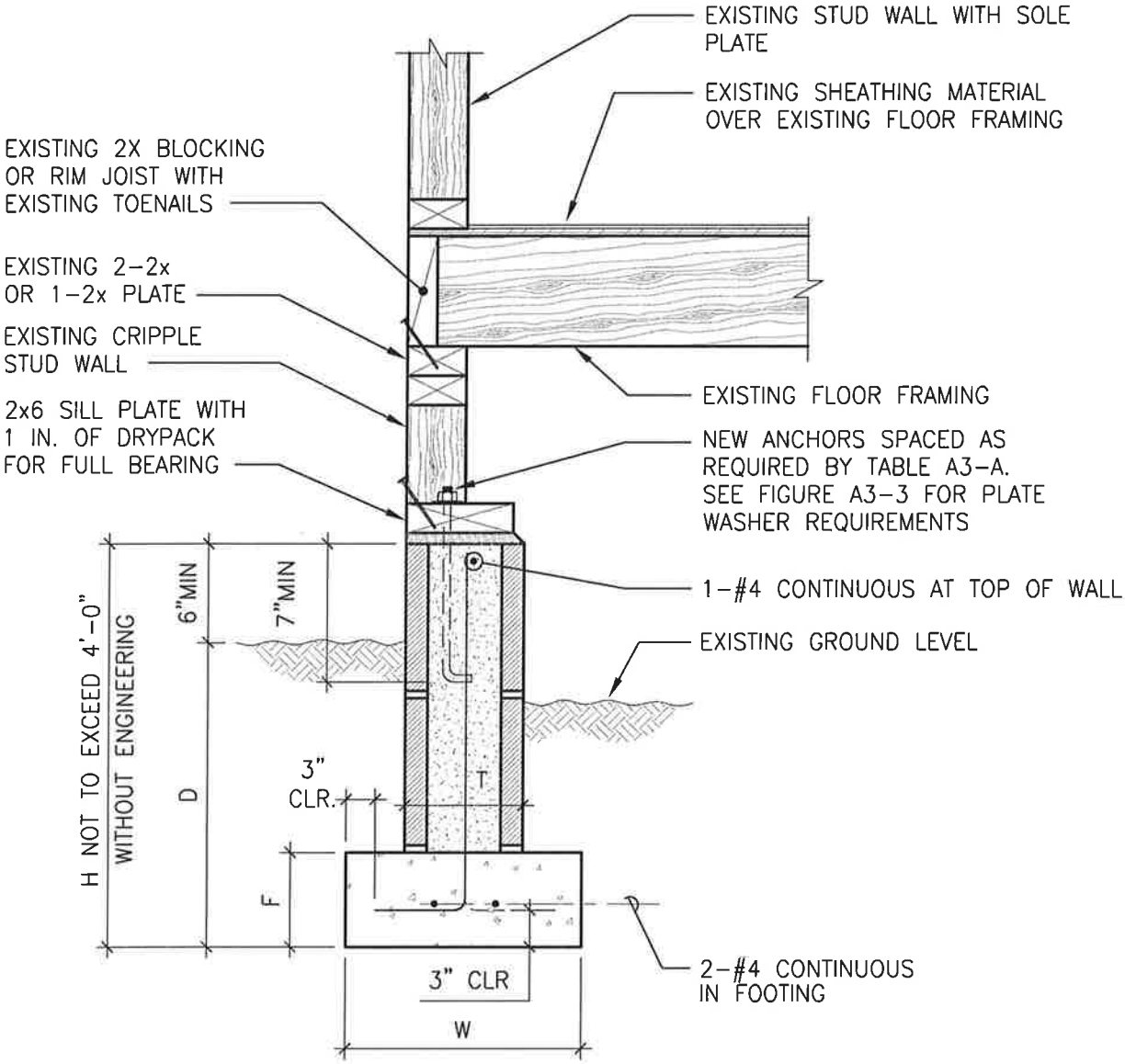

FOR SI: 1 INCH = 25.4mm, 1 FOOT = 304.8mm

FIGURE A3-2 – NEW CONCRETE MASONRY FOUNDATION

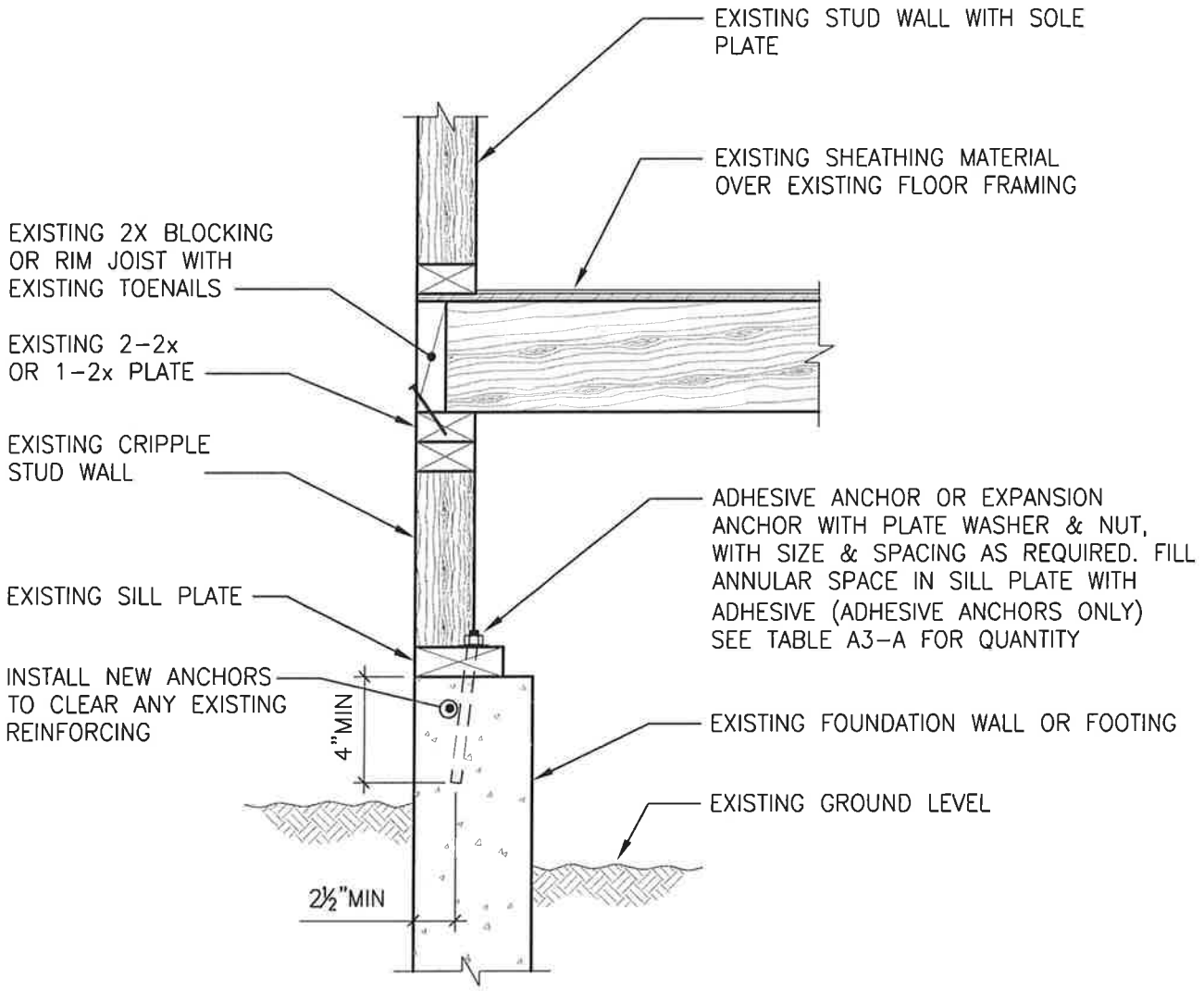

FOR SI: 1 INCH = 25.4mm

NOTES:

1. PLATE WASHERS SHALL COMPLY WITH THE FOLLOWING:
   ½ IN. ANCHOR OR BOLT – 3" x 3" x ~~¼"~~ 0.229 INCH (76 mm x 76 mm x 5.8 mm) MINIMUM
   ⅝ IN. ANCHOR OR BOLT – 3" x 3" x ~~¼"~~ 0.229 INCH (76 mm x 76 mm x 5.8 mm) MINIMUM
2. SEE FIGURE A3-5 OR A3-6 FOR CRIPPLE WALL BRACING

FIGURE A3-3 – SILL PLATE ANCHORING ~~BOLTING~~ TO EXISTING FOUNDATION

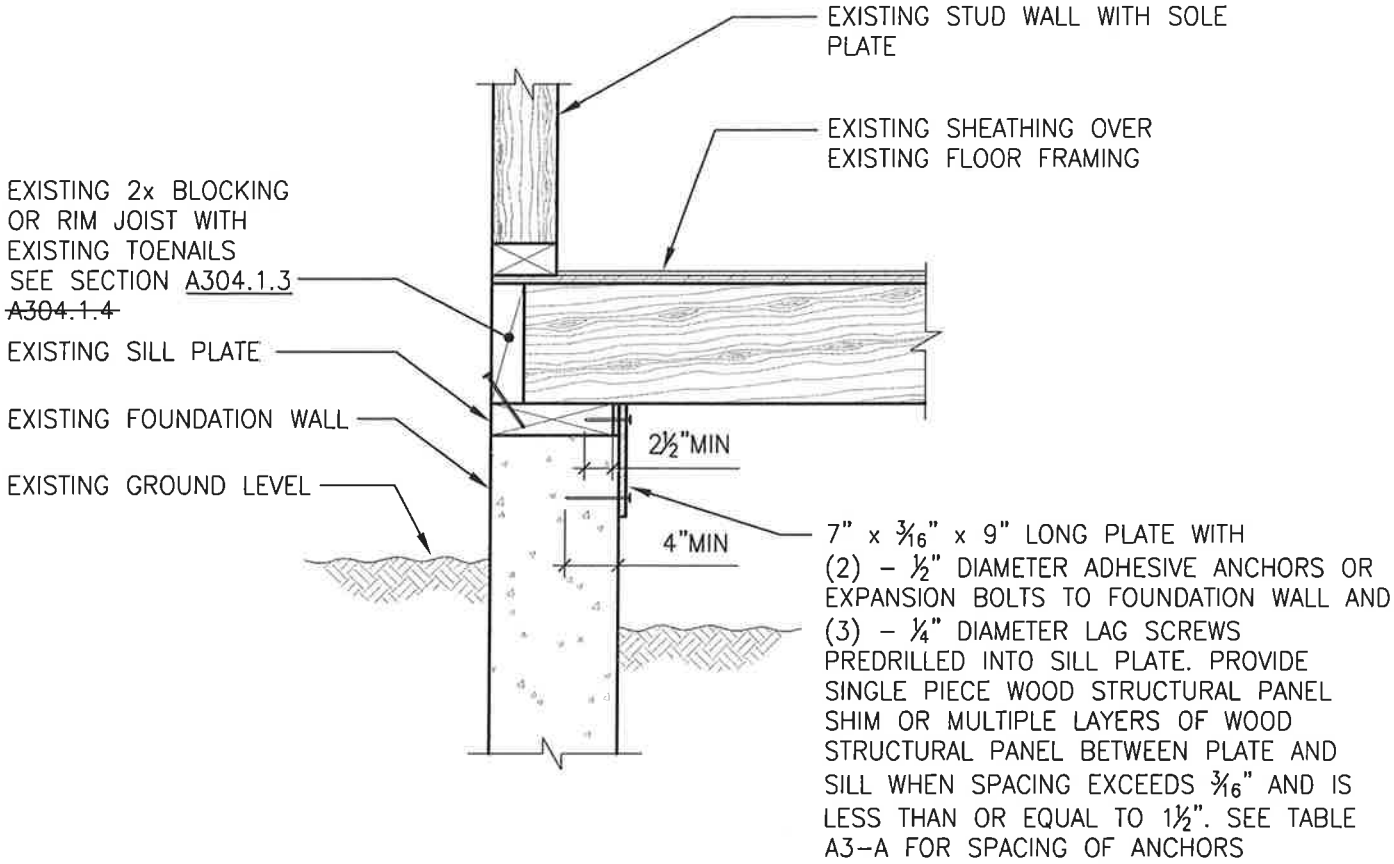

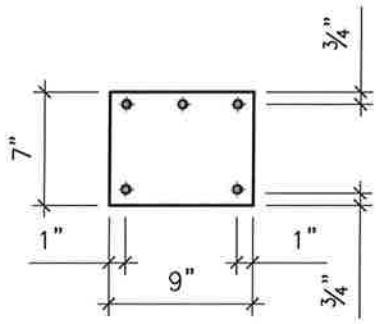

HOLE DIAMETER SHALL NOT EXCEED CONNECTOR DIAMETER BY MORE THAN 1/16"

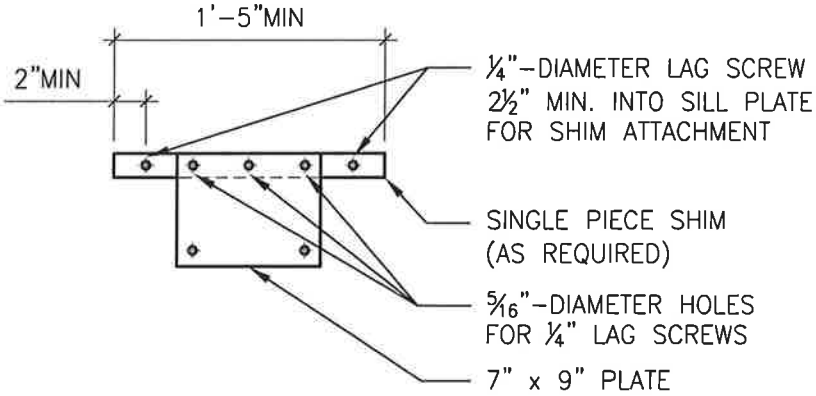

CONNECTION WHEN SHIM SPACE EXCEEDS ¾" IN WIDTH UP TO 1½"

FOR SI: 1 INCH = 25.4mm, 1 FOOT = 304.8

NOTES:

1. IF SHIM SPACE EXCEEDS 1½", ALTERNATE DETAILS WILL BE REQUIRED.
2. WHERE REQUIRED, SINGLE PIECE SHIM SHALL BE NATURALLY DURABLE WOOD ~~FOUNDATION GRADE REDWOOD~~ OR PRESERVATIVE TREATED WOOD. IF PRESERVATIVE TREATED WOOD IS USED, IT SHALL BE ISOLATED FROM THE FOUNDATION SYSTEM WITH A MOISTURE BARRIER.

FIGURE A3–4A – ALTERNATE SILL PLATE ANCHORING ~~BOLTING~~ IN EXISTING FOUNDATION WITHOUT CRIPPLE WALLS AND FLOOR FRAMING NOT PARALLEL TO FOUNDATIONS

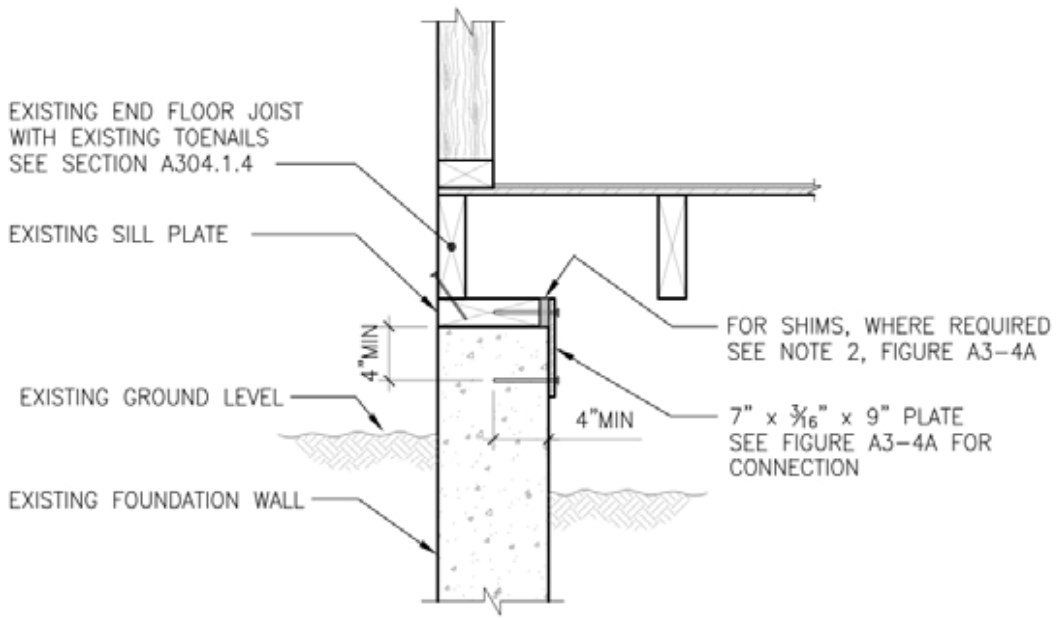

FOR SI: 1 INCH = 25.4mm

FIGURE A3-4B – ALTERNATE SILL PLATE ANCHOR TO EXISTING FOUNDATION WITHOUT CRIPPLE WALL AND FLOOR FRAMING PARALLEL TO FOUNDATIONS

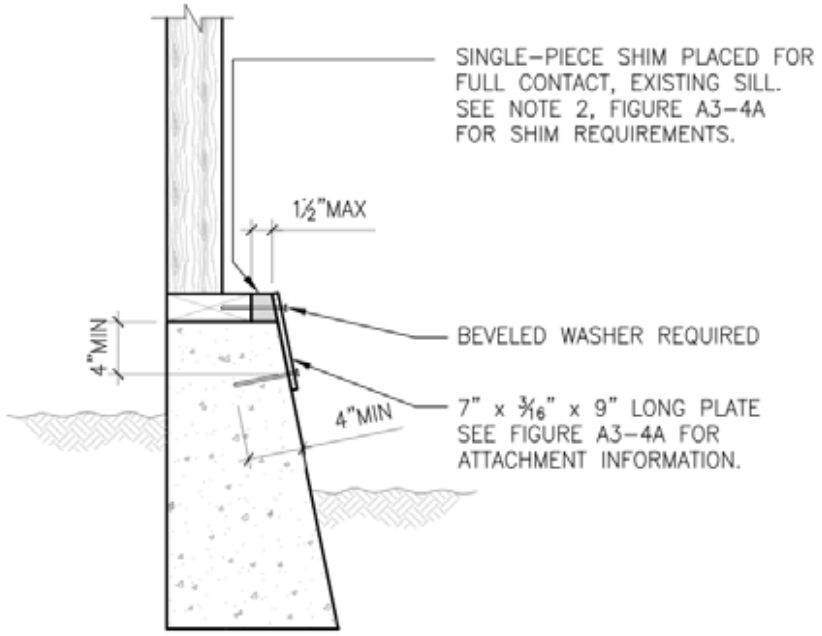

ALTERNATE CONNECTION
FOR BATTERED FOOTING

FOR SI: 1 INCH = 25.4mm

FIGURE A3-4C – SILL PLATE ANCHORING TO EXISTING FOUNDATI(ALTERNTATE

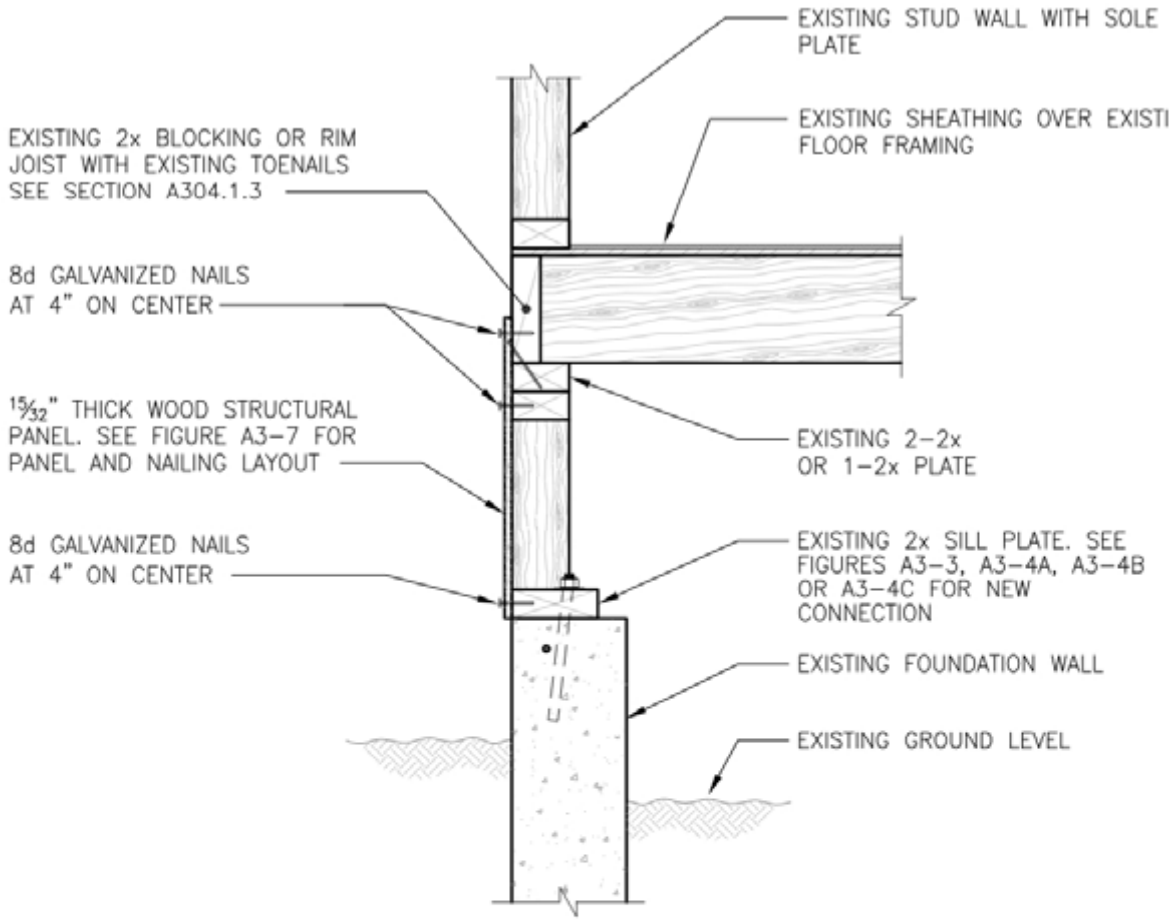

FOR SI: 1 INCH = 25.4mm

NOTES: SEE FIGURE A3-3 FOR SILL PLATE ANCHORING

FIGURE A3-5 – CRIPPLE WALL BRACING WITH NEW WOOD STRUC PANEL ON EXTERIOR FACE OF CRIPPLE STUDS

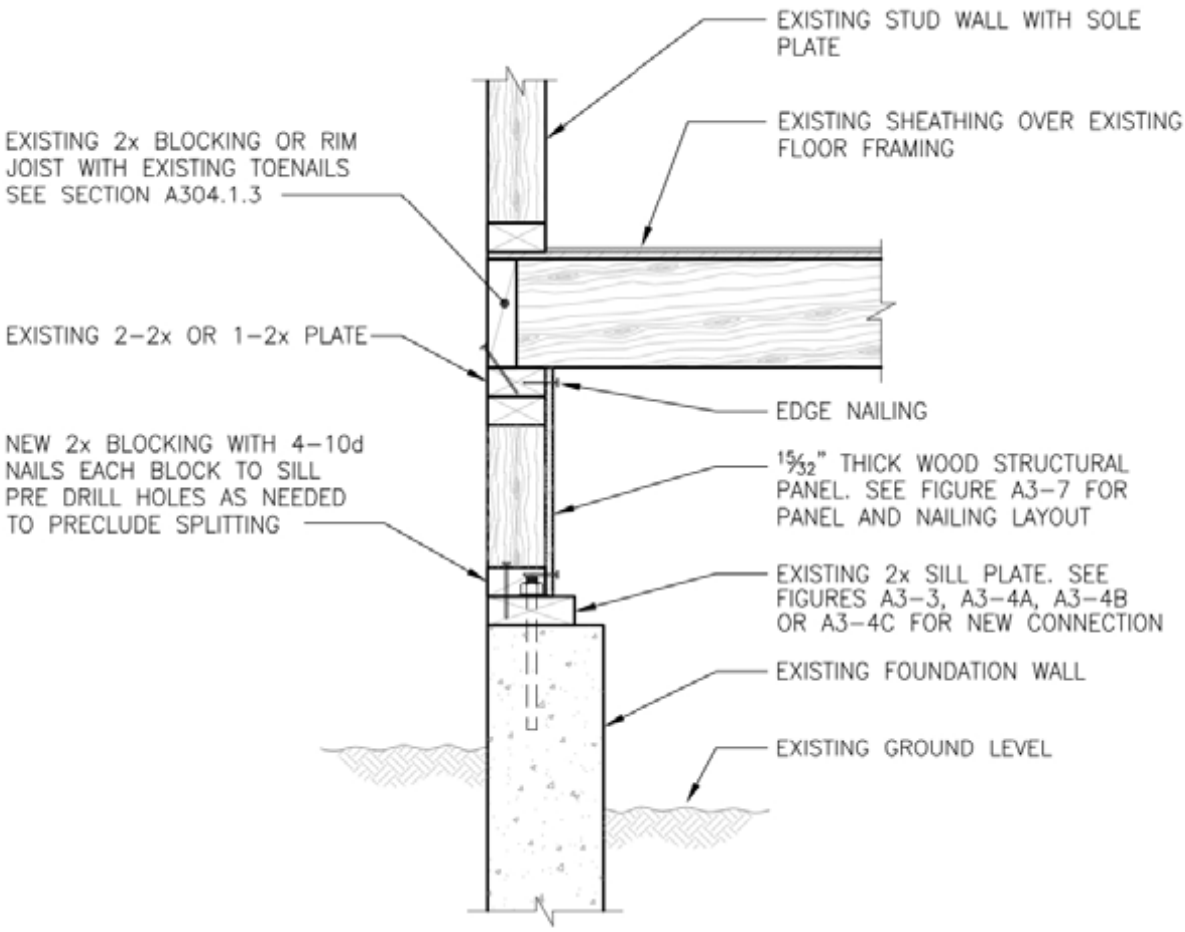

FOR SI: 1 INCH = 25.4mm

FIGURE A3-6 – CRIPPLE WALL BRACING WITH WOOD STRUCTURAI PANEL ON INTERIOR FACE OF CRIPPLE STUDS

2x BLOCKING FLAT ABOVE VENT OPENING. CONNECT TO STUDS WITH FRAMING CLIPS ~~SHEET METAL CONNECTORS~~

8d NAILS AT 12" ON CENTER AT INTERMEDIATE STUDS. MIN. 2 NAILS EACH STUD

EXISTING CRIPPLE STUDS

SEE ALTERNATES BELOW FOR VERTICAL PANEL JOINTS

2x BLOCKING FLAT ABOVE VENT OPENING. CONNECT TO STUDS WITH FRAMING CLIPS ~~SHEET METAL CONNECTORS~~

8d NAILS AT 4" ON CENTER ON ALL EDGES OF EACH INDIVIDUAL PIECE

2" TO 3" DIAMETER VENTILATION HOLES. SEE SECTION A304.4.3

0.75H MIN

1" CLEAR

1" CLEAR

EXISTING VENT

EXISTING FOUNDATION WALL

GROUND LEVEL

SILL ANCHOR

NEW 2x CRIPPLE STUD NAILED TO EXISTING STUD WITH 10d COMMON NAILS AT 4" ON CENTER AT WOOD STRUCTURAL PANEL JOINT. 3 NAILS MIN.

½" MIN

½" MIN

⅛" MIN

VERTICAL SPLICE AT DOUBLE STUD

EXISTING STUD 2" MIN. OR PROVIDE NEW STUD AT PANEL JOINTS

½" MIN

½" MIN

⅛" MIN

VERTICAL SPLICE AT SINGLE STUD

FOR SI: 1 INCH = 25.4mm

FIGURE A3-7 – PARTIAL CRIPPLE STUD WALL ELEVATION

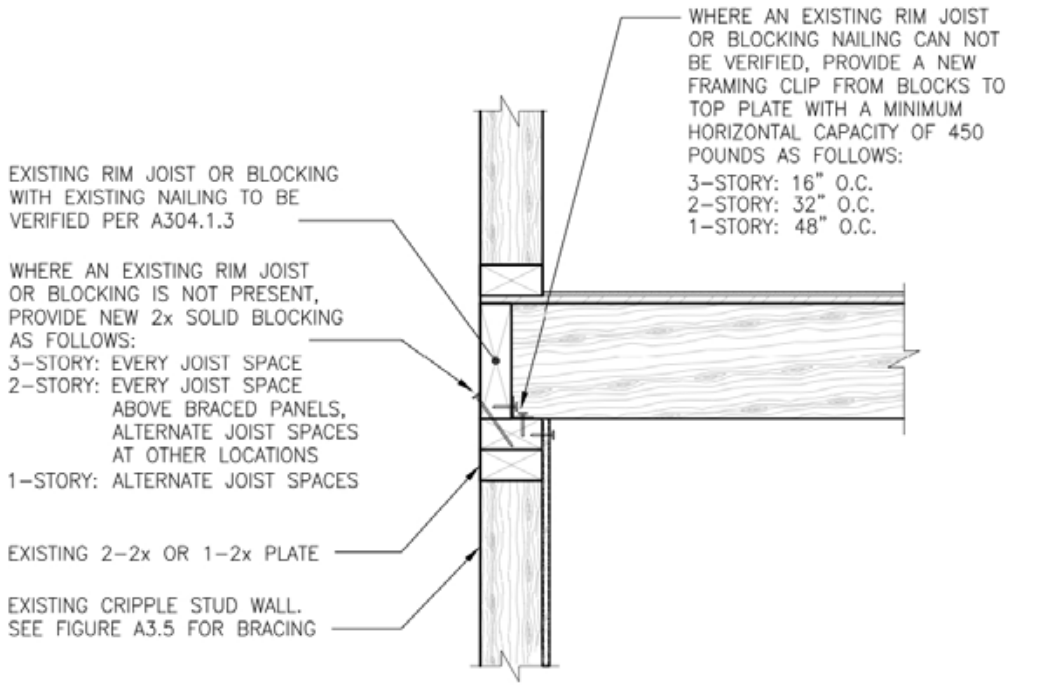

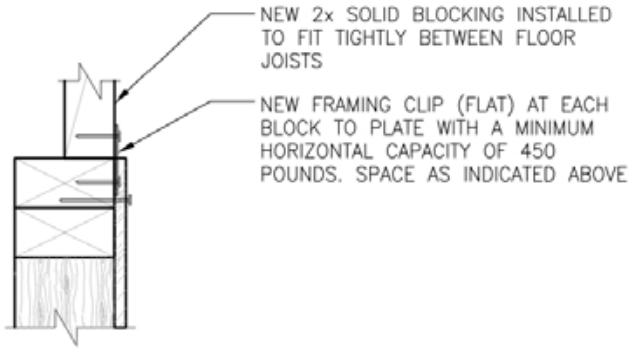

ALTERNATE DETAIL FOR FLUSH CONDITION

FOR SI: 1 INCH = 25.4mm, 1 POUND = 4.4N.

NOTES:

1. SEE MANUFACTURING INSTRUCTIONS FOR NAIL SIZES ASSOCIATED WITH METAL FRAMING CLIPS.

FIGURE A3-8A – TYPICAL FLOOR TO CRIPPLE WALL CONNECTION (FLOOR JOISTS NOT PARALLEL TO FOUNDATIONS)

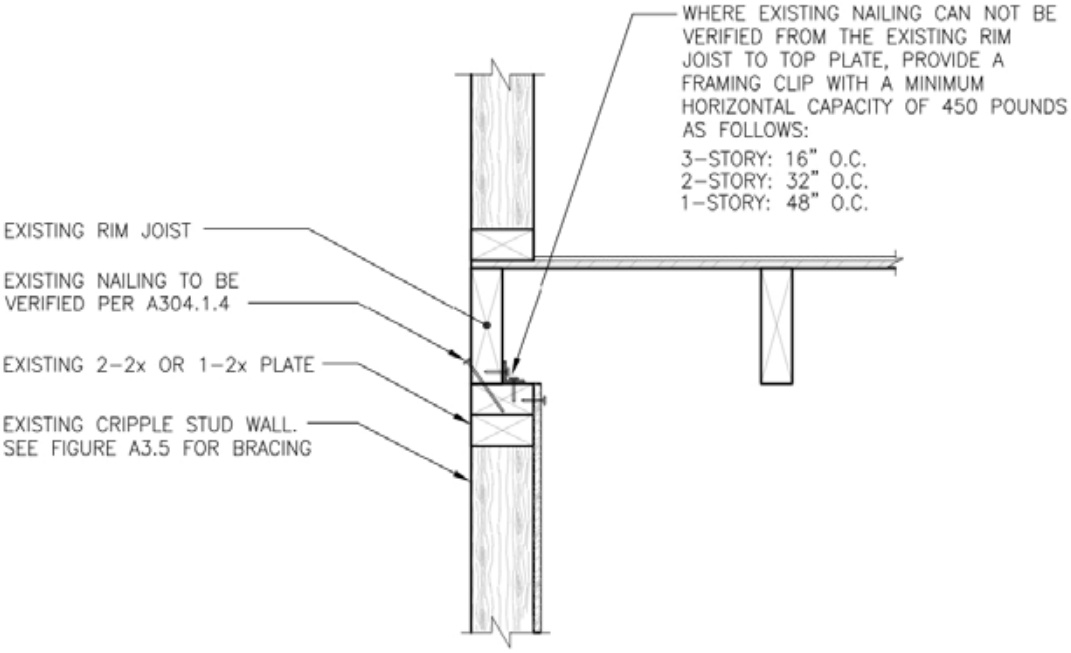

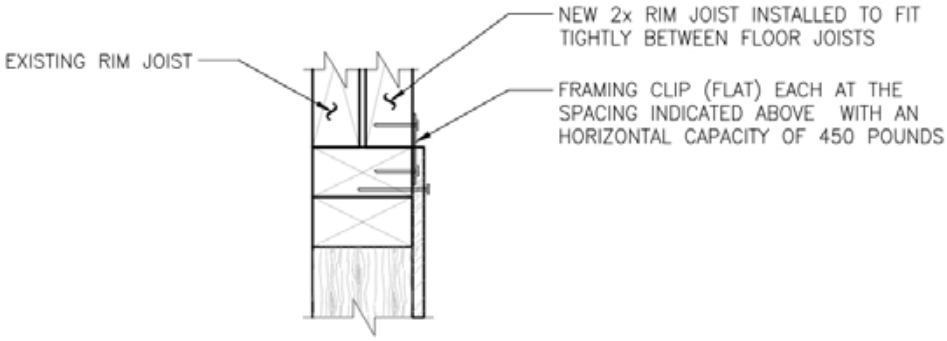

ALTERNATE CONNECTION
FOR FLUSH CONNECTION

FOR SI: 1 INCH = 25.4mm, 1 POUND = 4.4N.

NOTES:

1. SEE MANUFACTURING INSTRUCTIONS FOR NAIL SIZES ASSOCIATED WITH METAL FRAMING CLIPS.

FIGURE A3-8B – TYPICAL FLOOR TO CRIPPLE WALL CONNECTION (FLOOR JOISTS PARALLEL TO FOUNDATIONS)

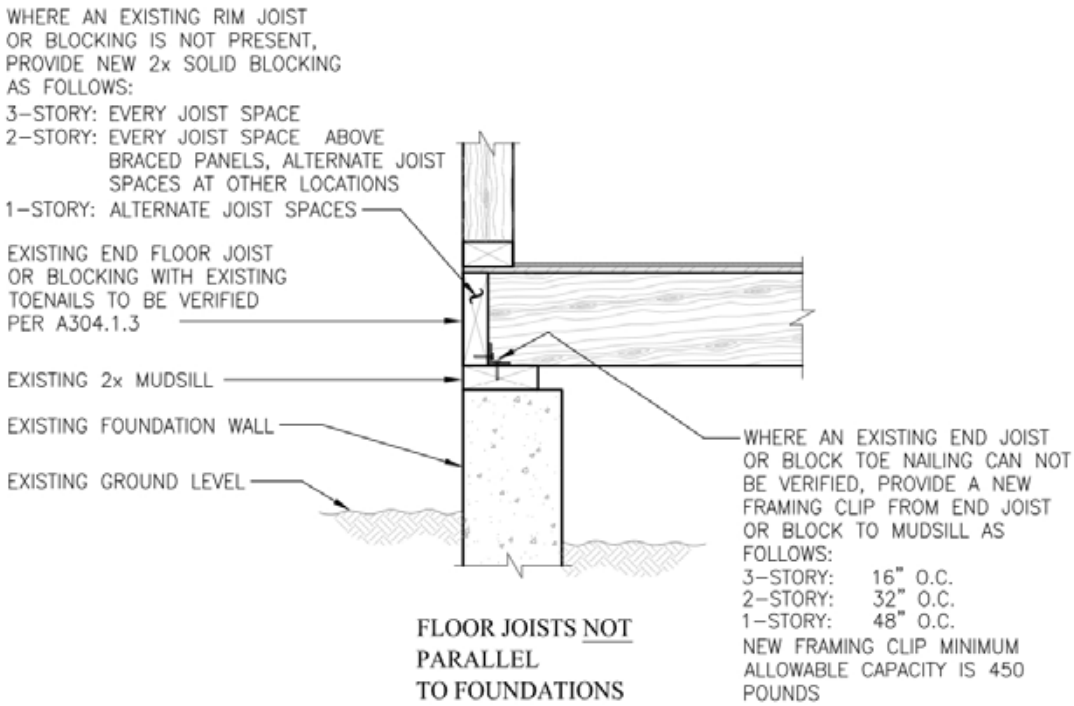

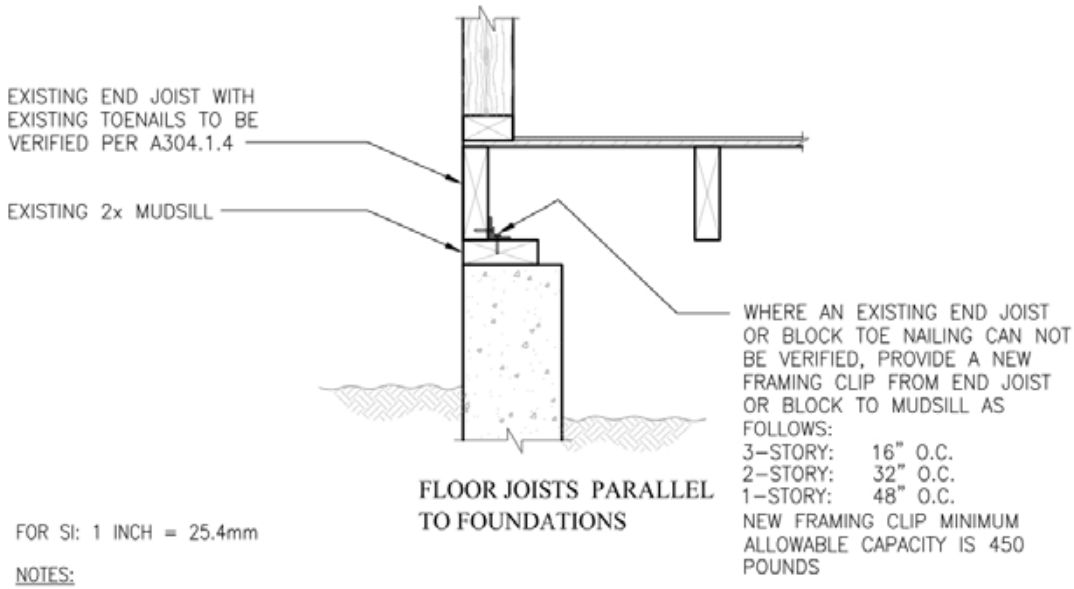

FOR SI: 1 INCH = 25.4mm

NOTES:

1. SEE SECTION A304.3 FOR SILL PLATE ANCHORAGE.
2. SEE MANUFACTURING INSTRUCTIONS FOR NAIL SIZES ASSOCIATED WITH METAL FRAMING CLIPS.

FIGURE A3-8C – TYPICAL FLOOR TO MUDSILL CONNECTIONS

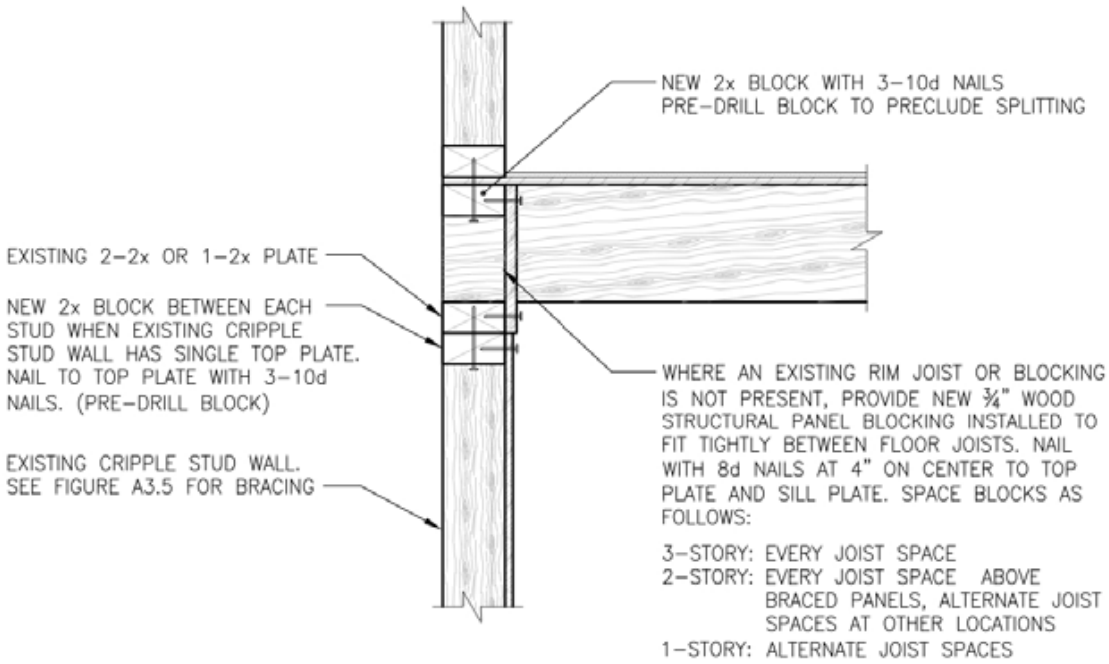

FLOOR JOISTS NOT PARALLEL TO FOUNDATION

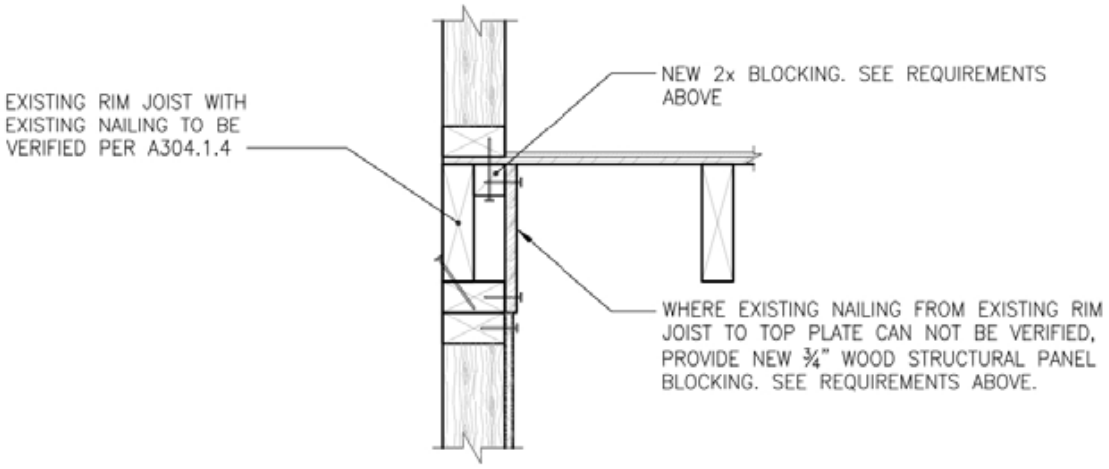

FLOOR JOISTS PARALLEL TO FOUNDATION

FOR SI: 1 INCH = 25.4mm, 1 POUND = 4.4N.

NOTES: SEE SECTION A304.4 FOR CRIPPLE WALL BRACING.

FIGURE A3–9 – ALTERNATE FLOOR FRAMING TO CRIPPLE WALL CONNECTION

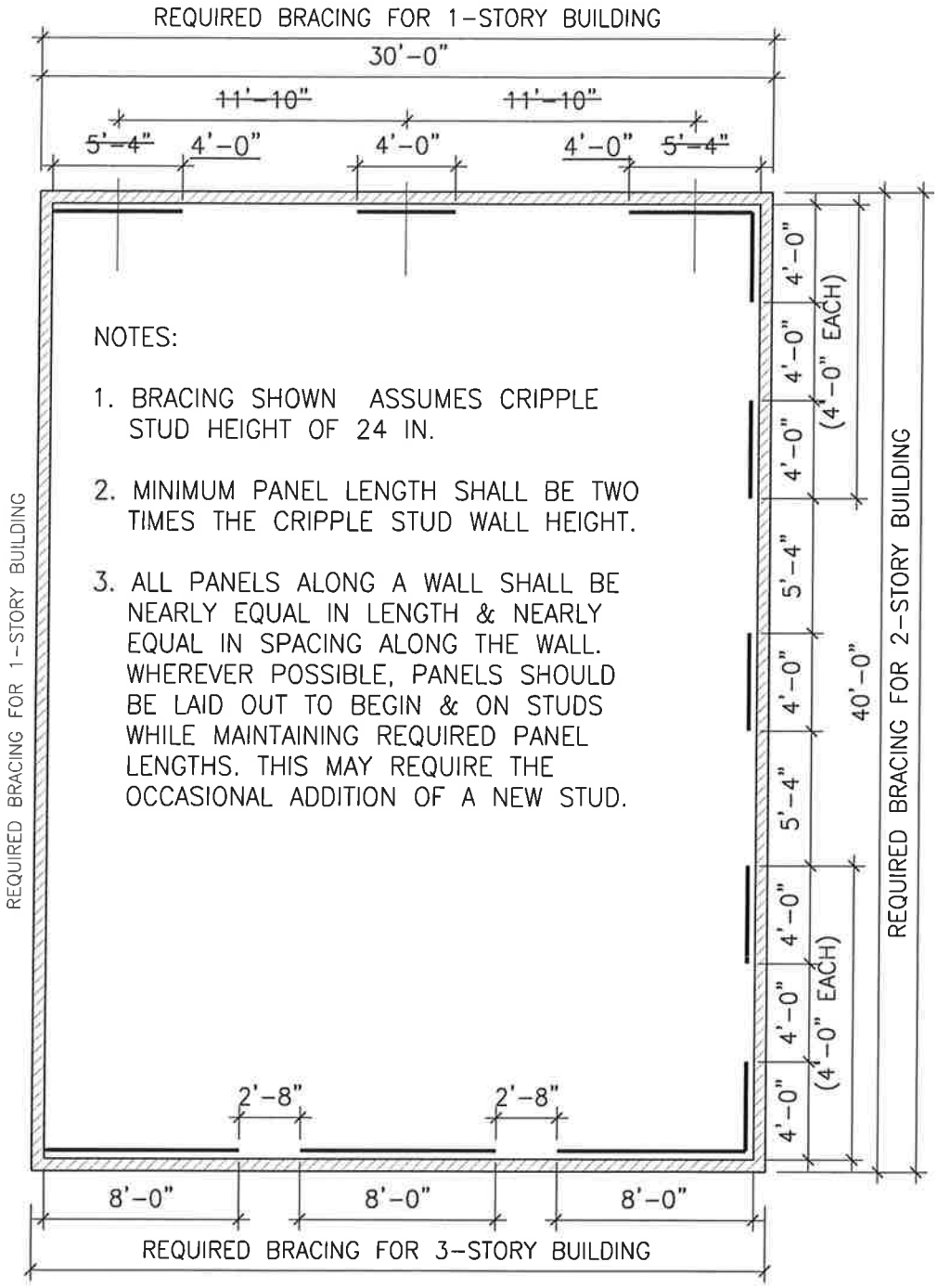

BRACING DETERMINATION:

1-STORY BLDG. – EACH END & NOT LESS THAN 40% OF WALL LENGTH.
TRANSVERSE WALL = 30'-0"x0.4=12'-0"
MIN. PANEL LENGTH=4'-0".

2-STORY BLDG. – EACH END & NOT LESS THAN 50% OF WALL LENGTH.
LONGITUDINAL WALL = 40'-0"x0.5=20'-0" MIN. OF BRACING.

3-STORY BLDG. – EACH END & NOT LESS THAN 80% OF WALL LENGTH.
TRANSVERSE WALL = 30'-0"x0.8=24'-0" MIN. OF BRACING.

FOR SI: 1 INCH = 25.4mm, 1 POUND = 4.4N.

NOTES: SEE SECTION A304.4 FOR CRIPPLE WALL BRACING.

FIGURE A3-10 – FLOOR PLAN – CRIPPLE WALL BRACING LAYOUT

5. HCD proposes to add ASTM A 653/A 653M-08 to Appendix A "Referenced Standards" as follows:

ASTM

A 653/A 653M-08 Standard Specification for Steel Sheet, Zinc-Coated (Galvanized) or Zinc-Iron Alloy-Coated (Galvannealed) by the Hot-Dip Process