EMERGENCY EXPRESS TERMS
FOR
PROPOSED BUILDING STANDARDS
OF THE
DIVISION OF THE STATE ARCHITECT

REGARDING PROPOSED CHANGES TO
CALIFORNIA BUILDING CODE
CALIFORNIA CODE OF REGULATIONS, TITLE 24, PART 2
ACCESSIBILITY TO PUBLIC BUILDINGS,
PUBLIC ACCOMMODATIONS, COMMERCIAL BUILDINGS AND
PUBLICLY FUNDED HOUSING

Legend for Emergency Express Terms:

1. **California amendment:** California language will appear in *italics* text.
2. **Amended, or repealed language**: Amended or repealed language will appear in <u>underline</u> and ~~strikeout~~.
3. **Adopted language:** Adopted language will appear in <u>underline</u>.
4. **Rationale:** The justification for the change is shown after each section or series of related changes.
5. **Notation**: Authority and reference citations are provided at the end of each section.
6. **Abbreviations:**

   CBSC (California Building Standards Commission)

   DSA-AC (Division of the State Architect – Access Compliance)

   USDOJ (United States Department of Justice)

   ADA Standards (2010 ADA Standards for Accessible Design)

EXPRESS TERMS

ITEM 1

1104B.3 Auditoriums, assembly halls, theaters and related facilities. *…*

1104B.3.9 Designated aisle seats. *In addition to the wheelchair spaces required, 5 percent, but not less than one, of all ~~fixed~~ aisle seats, shall be designated aisle seats with no armrests on the aisle side, or with removable or folding armrests on the aisle side. The designated aisle seats shall be those located closest to accessible routes. Each such seat shall be identified by a sign or marker with the International Symbol of Accessibility (see Figure 11B-6). Signage notifying patrons of the availability of such seats shall be posted at the ticket office. Signs and markers shall comply with Section 1117B.5.1 items 2 and 3, as applicable.*

Statement of Reason: During the 2010 rulemaking cycle, DSA-AC intended to incorporate the basic requirement of 2010 ADA Standards, Section 221.4, which requires at least five percent of the total number of aisle seats provided shall be *designated aisle seats*. Due to an inadvertent error, the approved amendment indicated at least five percent of *fixed* seats rather than *aisle* seats. DSA-AC is proposing to amend the provisions of 1104B.3.9 to correct this error.

Authority: Gov. Code§ 4450
Reference: Gov. Code§ 4450-4461, 12955.1 & 14679; Health & Safety Code§ 18949.1 & 19952-19959 & Vehicle Code§ 22511.8

ITEM 2

1115B.4 Accessible fixtures. *…*

1115B.4.1 Accessible water closets. *Water closets required to be accessible shall comply with this subsection:*

1. *The centerline of the accessible water closet ~~fixture~~ shall be 16 inches (405 mm) minimum and 18 inches (457 mm) maximum from the side wall or partition. ~~On the other side of the water closet, provide a minimum of 28 inches (711 mm) wide clear floor space if the water closet is adjacent to a fixture or a minimum of 32 inches (813 mm) wide clear floor space if the water closet is adjacent to a wall or partition. This clear floor space shall extend from the rear wall to the front of the water closet.~~*

   Exception: The centerline of accessible water closets located in ambulatory accessible compartments shall be 17 inches (430 mm) minimum and 19 inches (485 mm) maximum from the side wall or partition.

2. *Provide clear floor space and maneuvering space at accessible water closets in compliance with Section 1115B.4.1, Item 2. Refer to Section 1115B.3.1, Items 4.2 and 4.3 for additionally required maneuvering space at multiple-accommodation toilet facilities. Refer to Section 1115B.3.2, Item 3 for additionally required maneuvering space at single-accommodation toilet facilities.*

   2.1…
   2.2…
   2.3…

~~*Exception: An adjacent fixture at the rear wall is permitted to encroach into the required clear floor space at the wide side of the water closet where clearances are provided in compliance with Section 1115B.4.1, Item 1.*~~

Statement of Reason: DSA-AC is proposing to amend this section to align the CBC with the 2010 ADA Standards, Section 604.2. The requirement to locate the centerline of a water closet 18" absolute from a side wall or partition is being revised to provide a range of 16" minimum to 18" maximum from the side wall or partition. An exception is provided for water closets in ambulatory accessible toilet compartments. The exception provides that water closets within ambulatory accessible compartments be located 17" minimum to 19" maximum from the side wall or partition. In construction, the technological capacity to achieve an exact and precise placement of a water closet can be quite difficult. Variations in wall finish thicknesses or structural members can easily influence the final constructed condition, especially in concrete slab construction. Specifying a range rather than an absolute value for the location of the centerline of a water closet will better ensure that facilities accomplish the level of accessibility intended.

Additionally, DSA-AC is proposing to amend this section to delete the provision and exception which allow fixtures adjacent to an accessible water closet at least 28 inches from the water closet on the wide side, and to delete the provision which allows a wall or partition at least 32 inches from the water closet on the wide side. Under the 2010 ADA Standards, Sections 604.3.1 and 604.3.2, these elements are not permitted to overlap the required clear floor space at a water closet. Clear floor space requirements for water closets, as indicated in CBC 1115B.4.1, Item 2, accurately reflect the 2010 ADA Standards clear floor space requirements for water closets not within a compartment (604.3.1), wall mounted water closets within a compartment (604.8.1.1) and floor mounted water closets within a compartment (604.8.1.1), and the current language in these sections remains unchanged.

Related code changes are proposed for Figures 11B-1A and 11B-1B for consistency.

Authority: Gov. Code§ 4450
Reference: Gov. Code§ 4450-4461, 12955.1 & 14679; Health & Safety Code§ 18949.1 & 19952-19959

ITEM 3

1115B.8 Accessories. *…*

1115B.8.3 Towel, sanitary napkins, waste receptacles, dispensers and controls. *Where towel, sanitary napkins, waste receptacles, dispensers, other equipment and controls are provided, at least one of each type shall be located on an accessible route, with all operable parts, including coin slots, within 40 inches (1016 mm) from the finished floor and shall comply with Section 1117B.6, Controls and operating mechanisms.*

Exception: Pulls for fold-down baby changing tables may be located no higher than 48 inches (1219 mm) above the finish floor.

Statement of Reason: Fold-down baby changing tables installed within toilet or bathing facilities constitute a toilet room accessory with respect to operable parts required to be located within 40 inches of the finished floor per CBC Section 1115B.8.3. However, when deployed, a baby changing table functions as a built-in work surface and is subject to 27-inch minimum knee clearance and 33-inch maximum height requirements per CBC Sections 1122B.3 and 1133B.4. Given the typical industry range of 20 to 23 inches in height when the unit is stowed and typical location of the opening element / finger recess at the top of the stowed unit to afford adequate

leverage to open the unit, fold-up baby changing tables mounted with the finger recess at the current CBC maximum height of 40 inches when stowed provide approximately 20 inches or less of vertical knee clearance when deployed. DSA-AC is proposing to add an exception to Section 1115B.8.3 which permits fold-down baby changing tables to be mounted with a pull height of 48 inches maximum above the finish floor. This height is compliant with the forward and side reach ranges of the 2010 ADA Standards.

Authority: Gov. Code§ 4450
Reference: Gov. Code§ 4450-4461, 12955.1 & 14679; Health & Safety Code§ 18949.1 & 19952-19959

ITEM 4

1115B.8 Accessories. *…*

1115B.8.4 Toilet tissue dispensers. *Toilet tissue dispensers shall be located on the ~~wall within 12 inches (305 mm) of the front edge of the toilet seat,~~ wall or partition closest to the water closet, 7 inches (180 mm) minimum and 9 inches (230 mm) maximum in front of the water closet measured to the centerline of the dispenser, mounted below the grab bar~~,~~ with the outlet of the dispenser at a minimum height of 19 inches (485 mm)~~, and 36 inches (914 mm) maximum to the far edge from the rear wall~~. Dispensers that control delivery or that do not permit continuous paper flow shall not be used. See Figure 11B-1A.*

Statement of Reason: DSA-AC is proposing to amend this section to align the CBC with the 2010 ADA Standards, Section 604.7. The CBC currently requires toilet tissue dispensers to be located in accessible water closet compartments within 12 inches of the front edge of the toilet seat and within 36 inches of the rear wall. The amendment to this section will require the centerline of the toilet tissue dispenser to be within a range of 7-9 inches in front of the water closet. Additionally, language consistent with the 2010 ADA Standards, Section 604.7 is being added to clarify the regulated height of the toilet paper dispenser is measured to the outlet of the dispenser.

Authority: Gov. Code§ 4450
Reference: Gov. Code§ 4450-4461, 12955.1 & 14679; Health & Safety Code§ 18949.1 & 19952-19959

ITEM 5

1117B.1 Accessible drinking fountains. *Where drinking fountains are provided, they shall comply with this section: …*

4. ***Operable parts, spout height and location.*** *The bubbler shall be activated by a manually operated system complying with Section 1117B.6, Item 4 that is front mounted or side mounted and located within 6 inches (152 mm) of the front edge of the fountain or an electronically controlled device. ~~The bubbler outlet orifice shall be located within 6 inches (152 mm) of the front edge of the drinking fountain and within 36 inches (914 mm) of the floor. The water stream from the bubbler shall be substantially parallel to the front edge of the drinking fountain.~~ Spout outlets shall be 36 inches (914 mm) maximum above the finish floor or ground. The spout shall be located 15 inches (381 mm) minimum from the vertical support and 5 inches (127 mm) maximum from the front edge of the unit, including bumpers.*

5. ***Water flow.*** *The spout shall provide a flow of water at least 4 inches (102 mm) high ~~so as to allow the insertion of a cup or glass under the flow of water~~ minimum and shall be located 5 inches (127 mm) maximum from the front of the unit. The angle of the water stream shall be measured horizontally relative to the front face of the unit. Where spouts are located less than 3 inches (76 mm) of the front of the unit, the angle of the water stream shall be 30 degrees maximum. Where spouts are located between 3 inches (76 mm) and 5 inches (127 mm) maximum from the front of the unit, the angle of the water stream shall be 15 degrees maximum. On an accessible drinking fountain with a round or oval bowl, the spout must be positioned so the flow of water is within 3 inches (75 mm) of the front edge of the fountain.*

Statement of Reason: DSA-AC is proposing to amend this section to align the CBC with the 2010 ADA Standards, Sections 602.4, 602.5, and 602.6.

CBC Section 1117B.1, Item 4 is being amended to incorporate language from 2010 ADA Standards Section 602.4 which requires the drinking fountain spout to be located 15 inches minimum from the vertical support and 5 inches maximum from the front edge of the unit, including bumpers. A title for this section is also being added.

CBC Section 1117B.1, Item 5 is being amended to incorporate federal language which requires a water flow location of 5 inches maximum from the front of the unit. Language is also being added to describe acceptable angles of water flow, relative to the front of the drinking fountain, based on varying spout locations as measured from the front of the unit. A title for this section is also being added.

A related code change is proposed for Figure 11B-3A for consistency.

Authority: Gov. Code§ 4450
Reference: Gov. Code§ 4450-4461, 12955.1 & 14679; Health & Safety Code§ 18949.1 & 19952-19959

ITEM 6

1117B.5 Signs and identification. …

1117B.5.3 Proportions. *~~Characters~~ Visual characters on signs shall be selected from fonts ~~that have a width-to-height ratio of between 3:5 (60 percent) and 1:1 (100 percent)~~ where the width of the uppercase letter "O" is 55 percent minimum and 110 percent maximum of the ~~measured by the width of the uppercase letter "O" and~~ height of the uppercase letter "I"~~, and a stroke width-to-height ratio of between 1:5 (20 percent) and 1:10 (10 percent) measured by the width and height of the uppercase letter "I"~~. Stroke thickness of the uppercase letter "I" shall be 10 percent minimum and 30 percent maximum of the height of the character.*
…

1117B.5.5 Raised characters and pictorial symbol signs. *When raised characters are required or when pictorial symbols (pictograms) are used on such signs, they shall conform to the following requirements:*

1. ***Character type.*** *Characters on signs…*

2. ***Character size.*** *Raised characters…*

3. ***Pictorial symbol signs (pictograms).*** *Pictorial symbol signs…*

4. Character placement. *Characters and Braille…*

5. Proportions. *Raised characters on signs shall be selected from fonts where the width of the uppercase letter "O" is 55 percent minimum and 110 percent maximum of the height of the uppercase letter "I". Stroke thickness of the uppercase letter "I" shall be 15 percent maximum of the height of the character.*

Statement of Reason: DSA-AC is proposing to amend CBC Section 1117B.5.3 to address character proportions and stroke width requirements of fonts used for visual signs to align with the requirements of the 2010 ADA Standards, Sections 703.5.4 and 703.5.7.

DSA-AC is also proposing to amend CBC Section 1117B.5.5 to add Item 5 which addresses character proportions and stroke width requirements of fonts used for tactile signs to align with the requirements of the 2010 ADA Standards, Sections 703.2.4 and 703.2.6.

Authority: Gov. Code§ 4450
Reference: Gov. Code§ 4450-4461, 12955.1 & 14679; Health & Safety Code§ 18949.1 & 19952-19959

ITEM 7

1117B.5 Signs and identification. …

1117B.5.7 Mounting location and height. *Where permanent identification signs are provided for rooms and spaces, signs shall be installed on the wall adjacent to the latch side of the door. Where there is no wall space on the latch side, including at double leaf doors, signs shall be placed on the nearest adjacent wall, preferably on the right.*

Where permanent identification signage is provided for rooms and spaces they shall be located on the approach side of the door as one enters the room or space. Signs that identify exits shall be located on the approach side of the door as one exits the room or space.

~~Mounting height shall be 60 inches (1524 mm) above the finish floor to the center line of the sign.~~ Tactile characters (including raised text and braille characters) on signs shall be located 48 inches (1220 mm) minimum above the finish floor or ground surface, measured from the baseline of the lowest tactile character and 60 inches (1525 mm) maximum above the finish floor or ground surface, measured from the baseline of the highest tactile character. Mounting location shall be determined so that a person may approach within 3 inches (76 mm) of signage without encountering protruding objects or standing within the swing of a door.

See also Section 1115B.6 for additional signage requirements applicable to sanitary facilities.

Statement of Reason: DSA-AC is proposing to amend this section to align the CBC with the 2010 ADA Standards, Section 703.4.1. The 2010 ADA Standards require tactile characters on signs to be located 48 inches minimum above the finish floor to the baseline of the lowest tactile character, and 60 inches maximum above the finish floor to the baseline of the highest tactile character. The CBC currently requires identification signs with tactile text to be mounted 60 inches above the finish floor to the centerline of the sign. DSA-AC is proposing to require tactile characters on signs to be located 48 inches minimum above the finish floor to the baseline of the lowest tactile character, and 60 inches maximum above the finish floor to the baseline of the highest tactile character.

Authority: Gov. Code§ 4450
Reference: Gov. Code§ 4450-4461, 12955.1 & 14679; Health & Safety Code§ 18949.1 & 19952-19959

ITEM 8

1133B.2 Doors. *…*

1133B.2.5.2 *Hand-activated door opening hardware, handles, pulls, latches, locks and other operating devices on accessible doors shall have a shape that is easy to grasp with one hand and does not require tight grasping, tight pinching or twisting of the wrist to operate. Hardware shall be centered between ~~30 inches (762 mm)~~ 34 inches (864 mm) and 44 inches (1118 mm) above the floor. Latching and locking doors that are hand-activated and which are in a path of travel shall be operable by lever-type hardware, panic bars, push-pull activating bars, U-shaped handles or other hardware designed to provide passage. Locked exit doors shall operate as above in egress direction.*

Statement of Reason: DSA-AC is proposing to amend this section to align the CBC with the 2010 ADA Standards, Section 404.2.7. The 2010 ADA Standards require door opening hardware to be located 34 inches minimum and 48 inches maximum above the finish floor or ground. The CBC currently requires door opening hardware to be centered between 30 inches and 44 inches above the floor. The DSA-AC is proposing to apply the most stringent of the state and federal minimum and maximum height requirements to avoid a potential conflict. The proposed amendment to this section will require door-opening hardware to be centered between 34 inches and 44 inches above the floor.

Authority: Gov. Code§ 4450
Reference: Gov. Code§ 4450-4461, 12955.1 & 14679; Health & Safety Code§ 18949.1 & 19952-19959

ITEM 9

1134B Accessibility for Existing Buildings *…*

1134B.2 General. *When alterations, structural repairs…*

1134B.2.1 *A primary entrance to the building or facility and the primary path of travel to the specific area of alteration, structural repair or addition, and sanitary facilities, drinking fountains, signs and public telephones serving the area.*

Exceptions:

1. *…*
2. *…*
3. *…*
4. *…*

5. *If an element listed in Section 1134B.2.1, Exception 5, Items 5.1 through 5.5 has been constructed or altered in accordance with the accessibility requirements in either the 2007 or 2010 California Building Code, retrofit of that element to reflect the incremental changes in the July 1, 2012 Emergency Supplement to the 2010 California Building Code shall not be required solely because of an alteration to an area served by the element.*

5.1 Accessible water closet – distance to adjacent wall or partition.

5.2 Accessible water closet – encroachment of the adjacent fixture at the rear wall into the required clear floor space at the wide side of an accessible water closet.

5.3 Toilet tissue dispenser – distance in front of water closet.

5.4 Drinking fountain spout outlet (bubbler outlet) – distance from front edge of the fountain.

5.5 Drinking fountain spout – angle of water stream.

Statement of Reason: DSA-AC is proposing to add an exception to this section to coordinate with the 2010 ADA Standards, Section 35.151(b)(4)(ii)(C) of 28 CFR Part 35, which includes a 'safe harbor' provision for path of travel elements constructed or altered in accordance with the 1991 ADA Standards. This federal provision does not require path of travel elements to be modified to reflect incremental changes in the 2010 ADA Standards solely because of an alteration to an area that is served by that path of travel. DSA-AC is proposing to amend this section to include a similar provision which provides relief from the requirement to upgrade specified elements constructed or altered in accordance with the accessibility requirements in either the 2007 or 2010 California Building Codes. The proposed exception will not require the specified elements to be modified to reflect incremental changes in the Emergency Supplement to the 2010 California Building Code solely because of an alteration to an area served by that element. This exception includes a list of the five elements which will qualify for the exception. Only elements proposed for amendment in this emergency rulemaking package have been included in the list of qualifying elements.

DSA-AC believes that this proposed amendment will ensure access for individuals with disabilities to buildings and facilities, while providing financial relief for alteration projects subject to the Emergency Supplement to the 2010 California Building Code. This amendment does not provide a blanket exemption for facilities. If an area is undergoing alteration, and required elements serving that area do not comply with either the 2007 or 2010 California Building Codes, then those elements must be brought into compliance with the Emergency Supplement to the 2010 California Building Code.

Authority: Gov. Code§ 4450
Reference: Gov. Code§ 4450-4461, 12955.1 & 14679; Health & Safety Code§ 18949.1 & 19952-19959

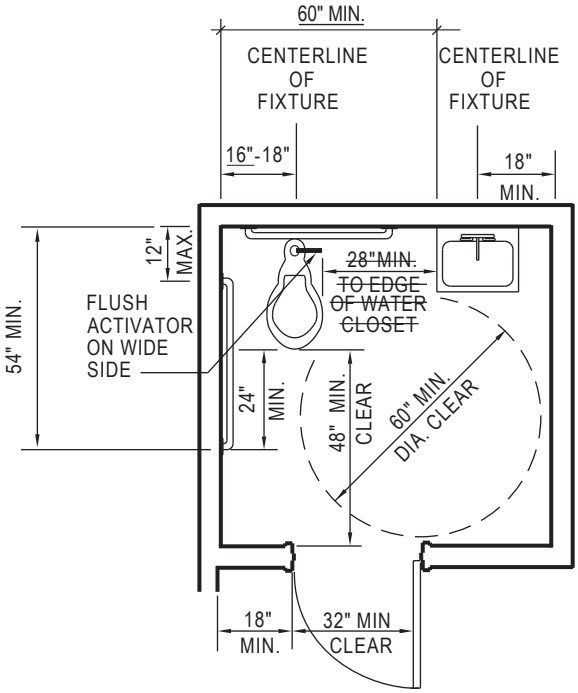

SINGLE-ACCOMMODATION TOILET FACILITY

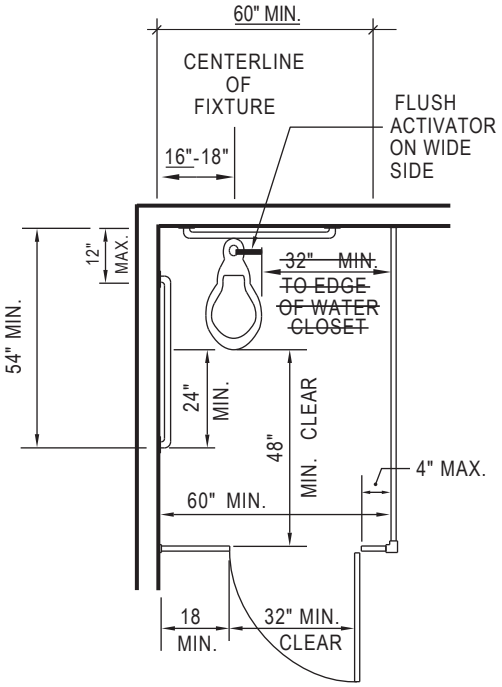

ACCESSIBLE WATER CLOSET COMPARTMENT WITHIN A MULTIPLE-ACCOMMODATION TOILET FACILITY

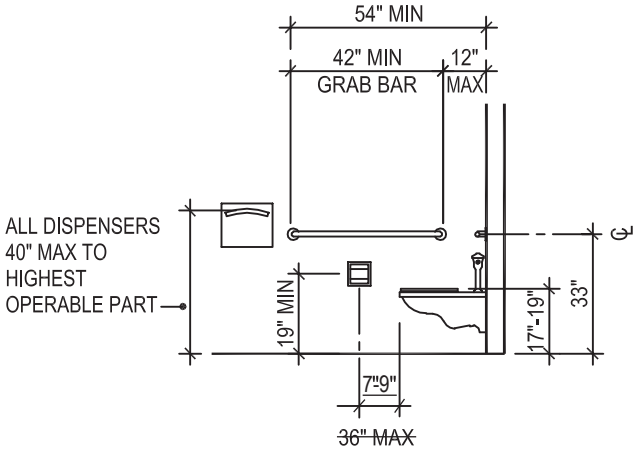

SIDE WALL ELEVATION

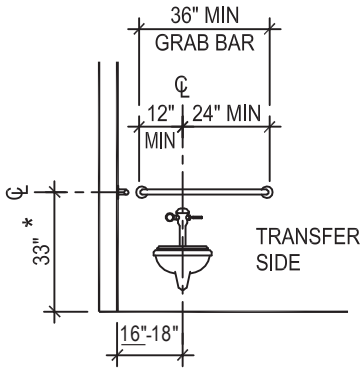

* REAR GRAB BAR ALLOWED AT 36" A.F.F. AT TANK-TYPE TOILET

REAR WALL ELEVATION

THESE DIAGRAMS ILLUSTRATE THE SPECIFIC REQUIREMENTS OF THESE REGULATIONS AND ARE INTENDED ONLY AS AN AID FOR BUILDING DESIGN AND CONSTRUCTION

FIGURE 11B-1A

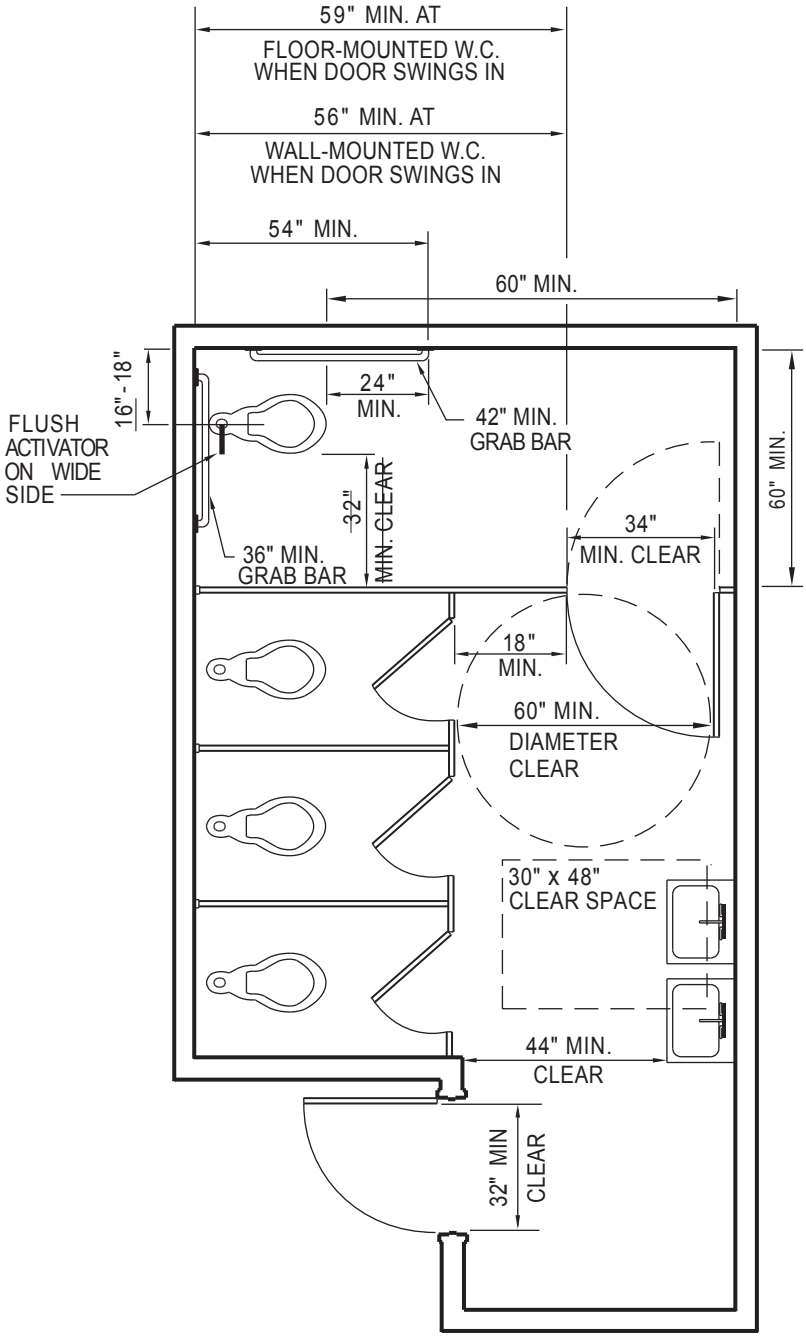

THIS DIAGRAM ILLUSTRATES THE SPECIFIC REQUIREMENTS OF THESE REGULATIONS AND IS INTENDED ONLY AS AN AID FOR BUILDING DESIGN AND CONSTRUCTION.

FIGURE 11B-1B—MULTIPLE-ACCOMMODATION TOILET FACILITY

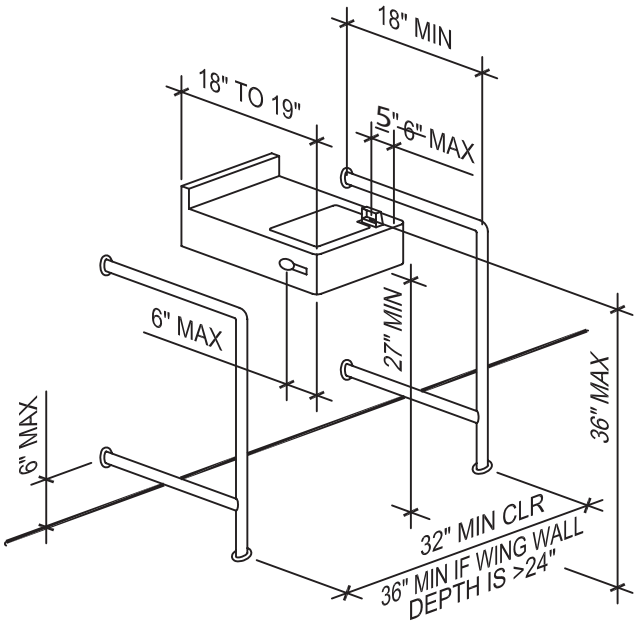

(b) NONALCOVE WING WALL INSTALLATION

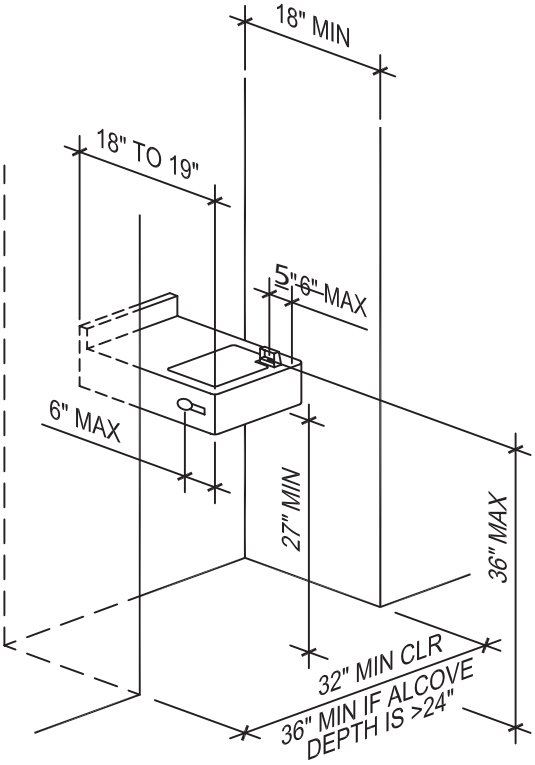

(a) ALCOVE INSTALLATION

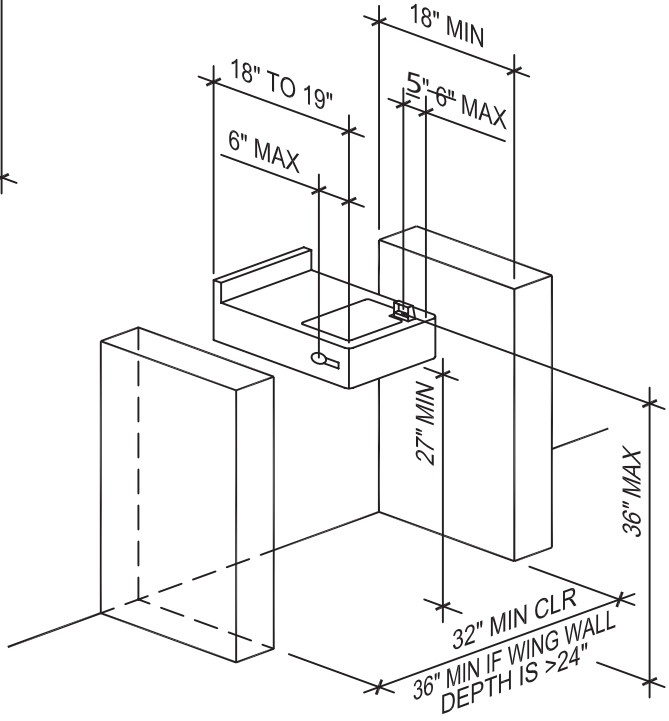

(c) NONALCOVE SOLID WING WALL INSTALLATION

FIGURE 11B-3A - DRINKING FOUNTAINS