STATE OF CALIFORNIA
Department of General Services - Office of Procurement
PURCHASE ORDER

Form GSOP 1-PIN (04/98)

Purchase Order No.	Rev.	Date
62085		6/30/2008

Supplier No.	Solicitation No.	Delivery Date	FOB Point	Invoice Terms
312475	56736	As Specified	Destination	

LEDSTAR
131 WESTCREEK DRIVE
ONTARIO, ON L4L9N-6
CANADA
Attn: VINCE MCEWAN

Phone: 905-265-7800

Ship To:
DEPT. OF TRANSPORTATION
SACRAMENTO WAREHOUSE
2001 EVERGREEN STREET
SACRAMENTO, CA 95814
Attn: MITCH MCINTYRE 9163241208

Charge To:
DOT PURCHASING IMS #B-15
1727 30TH STREET MS#65
SACRAMENTO, CA 95816
SEE BELOW 4 INVOICE INST.

Agency Billing	Agency Purchase Estimate	Purchase Estimate	Revision
60006	22-W1332KM	66944	9

Agency Contact	Phone	Date Received
KATIE MCCLAIN	916-227-5668	

Item No.	Quantity	Unit	Commodity Code	Description	Unit Price	Extension

This purchase order is being awarded on JULY 16, 2008 pursuant to Government Code Section 13332.17. Any encumbrances made pursuant to this purchase order shall be construed to have been made on the last day of the preceding fiscal year.

The general provisions for Non-IT commodities are hereby incorporated by reference. These General Provisions can be obtained by phoning (916) 375-4400 or by accessing our website at:

www.documents.dgs.ca.gov/pd/modellang/GPnonIT0407.pdf

THE FOLLOWING INFORMATION IS PROVIDED FOR AGENCY USE ONLY:

Prime Contractor: NS

FURNISH AND DELIVER:

40	EA	6310-600-0475-4	MODULE TRAFFIC CONTROL SYSTEM Right Hand Model 500 CMS Systems in accordance with TEES Chapter 8 Specifications for Changeable Message Sign Systems. Including Model 334C cabinet supplied from the pre-approved Qualified Products list of vendors. In accordance with Model 334C Specifications dated Feb. 1993 and TEES Chapter 8 Specifications for Changeable Message Sign Systems.		57,879.0000	2,315,160.00
10	EA	6310-600-0475-4	MODULE TRAFFIC CONTROL SYSTEM Left Hand Model 510 CMS Systems in accordance with TEES Chapter 8 Specifications for Changeable Message Sign Systems. Including Model 334C cabinet supplied from the pre-approved Qualified Products list of vendors. In accordance with Model 334C Specifications dated Feb. 1993 and TEES Chapter 8 Specifications for Changeable Message Sign Systems.		59,550.0000	595,500.00

Sales and/or use tax to be extra unless noted above

Buyer	Phone	BOC Number
SHANNON KELLER	916-375-4606	

STATE OF CALIFORNIA
Department of General Services - Office of Procurement

PURCHASE ORDER CONTINUATION

Form GSOP 2-PIN (04/98)

Purchase Order No.	*Revision*	*Date*	*Supplier No.*	*Supplier Name*
62085		6/30/2008	312475	LEDSTAR

Item No.	*Quantity*	*Unit*	*Commodity Code*	*Description*	*Unit Price*	*Extension*
				PO Miscellaneous Charges and Discounts		Dollar Value
				BATCH ADJUSTMENT (CHARGE)		75,000.00
					Total Value:	2,985,660.00

FOR THE PURPOSE OF THIS AWARD

Only Free On Board (FOB) Destination will be accepted.

ATTACHMENTS

THE FOLLOWING DOCUMENTS ARE ATTACHED AND PART OF THIS PURCHASE ORDER AWARD:

1. Specification - TEES Ch. 8 Specifications for Changeable Message Sign Systems, dated February 2003
2. Specification - Transportation Electrical Equipment Specifications (TEES), dated August 16, 2002
   Chapter 1 - General Specifications
   Chapter 2 - Specifications for Models 170E Enhanced Controller Unit and Associated Modules
3. Specification - Traffic Signal Control Equipment Specifications Chapter 6, dated January 1989
4. State of California Qualified Products List, dated April 21, 2008
5. Special Provisions of 8 pages

DELIVERY

Each shipment shall include a packing list with all serial numbers.

A spare parts package shall be provided and meet the requirements of TEES Chapter 8 Section 1 (8.1.10 Spare Parts) for each 500 and 510 CMS System.

See Special Provisions, attachment #5 (page 3 of 8) of this purchase order for delivery instructions.

TRAVEL PER DIEM

A batch adjustment totaling $75,000.00 has been added to the purchase order to cover travel costs for up to two (2) Caltrans engineers taking up to two (2) pre-production and two (2) final testing visits for each shipment and for one (1) DGS employee taking one (1) pre-production and one (1) final testing visit of five (5) days per visit. Arrangements for transportation, lodging and meals shall be made for State employees. Invoices for State travel expenses shall be for direct, documented costs only.

State travel costs shall be paid from the batch adjustment. All invoices for travel must include the invoices, receipts or other written documentation verifying valid travel costs.

NOTE:
If the testing, called out in the specifications, fails and additional trips or extended stay is required to allow staff the confirmation of the testing success then the additional travel or stay expense, as necessary, shall be paid by the manufacturer.

OPTION TO INCREASE OR DECREASE QUANTITIES

The State reserves the right to increase or decrease quantities by fifty (50) percent at the purchase order price if option is exercised within 120 days from date of the first shipment.

STATE OF CALIFORNIA

Department of General Services - Office of Procurement

PURCHASE ORDER CONTINUATION

Form GSOP 2-PIN (04/98)

Purchase Order No.	*Revision*	*Date*	*Supplier No.*	*Supplier Name*
62085		6/30/2008	312475	LEDSTAR

Item No.	*Quantity*	*Unit*	*Commodity Code*	*Description*	*Unit Price*	*Extension*

SALES TAX

Sales tax is not included on the bid or in purchase order award. Sales tax should be added at time of invoicing. The sales tax rate applied should be based on the rate of the area the product is to be delivered to.

BILLING INQUIRIES

All inquiries for purchase orders with Caltrans should be directed to Caltrans Accounts Payable in Sacramento at 1-800-303-1160 or 916-227-8946.

INVOICE INSTRUCTIONS

Submit invoices for approval to:

Department of Transportation
Division of Traffic Operations MS#36
Attention: David Song
1120 N Street
Sacramento, Ca 95814

CHANGE ORDERS

Any Purchase Order resulting from this bid may be amended, modified, or terminated at any time by mutual agreement of the parties in writing. Change orders amending, modifying or terminating the Purchase Order, including any modifications of the compensation payable, may be issued only by the State Procurement Officer. All such change orders shall be in writing and issued only upon written concurrence of the supplier. Termination, as that term is used in this section, does not include termination for default of the supplier.

SCPRS

This Purchase order has been registered into the state contact and procurement registration system (https://www.scprs.dgs.ca.gov/). The registration number is 26600708321845.

TEES
Chapter 8
SPECIFICATIONS FOR CHANGEABLE MESSAGE SIGN SYSTEMS

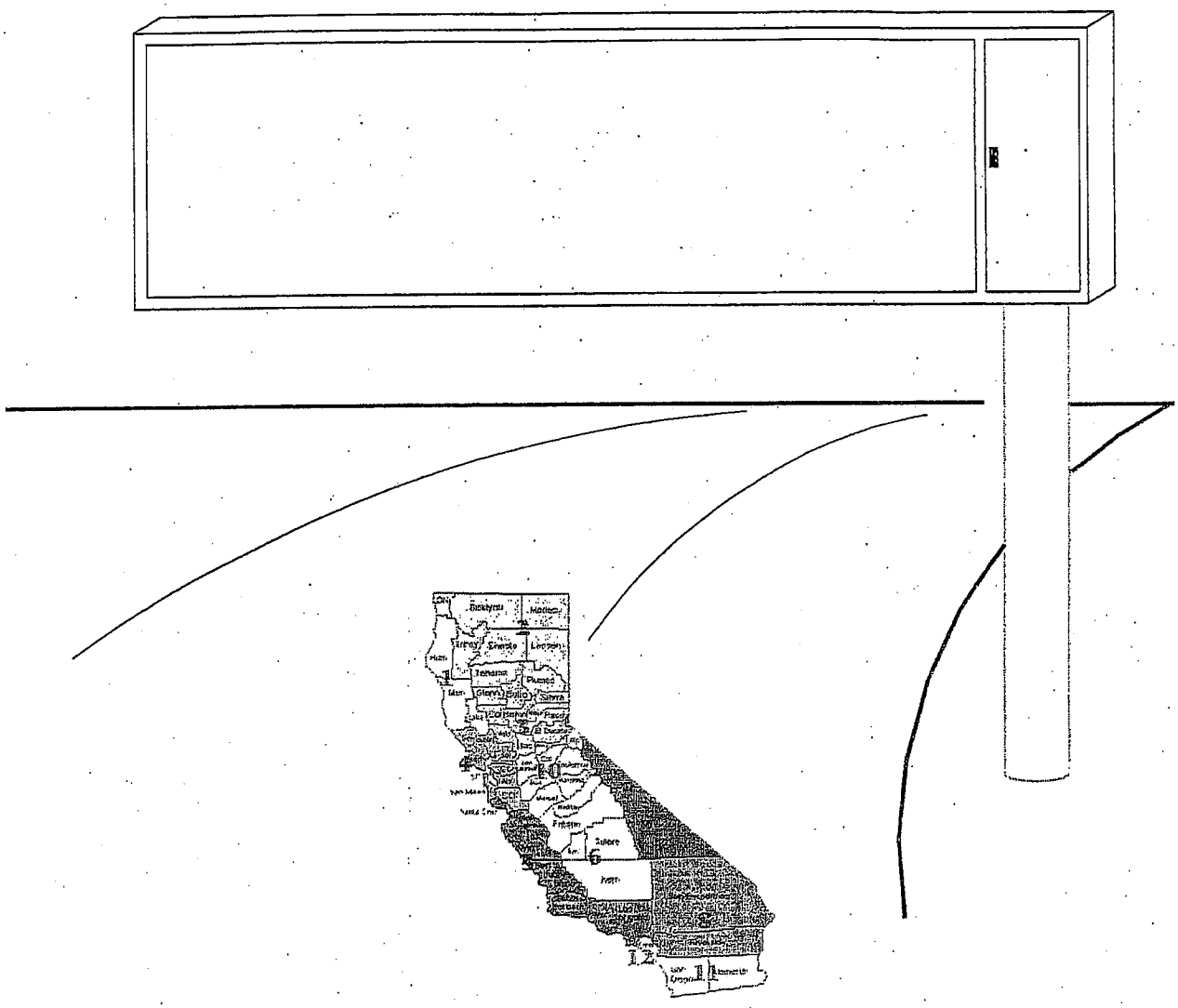

Department of Transportation

Caltrans

FEBRUARY 2002

STATE OF CALIFORNIA
DEPARTMENT OF TRANSPORTATION

GRAY DAVIS
Governor

MARIA CONTRERAS-SWEET
Secretary
Business, Transportation & Housing Agency

JEFF MORALES
Director
Department of Transportation

RANDELL IWASAKI
Deputy Director
Maintenance and Operations

JACK BODA
Program Manager
Traffic Operations

MARTHA V. STYER
Chief, ITS Development and Support

CHAPTER 8

SPECIFICATIONS FOR MODEL 500, 510, AND 520 CHANGEABLE MESSAGE SIGN SYSTEMS

			PAGE
SECTION 1	-	GENERAL	8-1-1
SECTION 2	-	PIXEL MATRIX MODULE	8-2-1
SECTION 3	-	SIGN STRUCTURE AND HOUSING	8-3-1
SECTION 4	-	CONTROL COMPARTMENT	8-4-1
SECTION 5	-	MODELS 500, 510 AND 520 SYSTEM INTERCONNECTION	8-5-1
SECTION 6	-	CONTROL ASSEMBLY	8-6-1
SECTION 7	-	GENERAL CMS PLAN DETAILS	8-7-1
SECTION 8	-	MODEL 500 CMS PLAN DETAILS	8-8-1
SECTION 9	-	MODEL 510 CMS PLAN DETAILS	8-9-1
SECTION 10	-	MODEL 520 CMS PLAN DETAILS	8-10-1

SECTION 1 - GENERAL

8.1.1 The Models 500 and 510 CMS shall have a configuration of 5 Pixel Matrix Modules high by 12 Pixel Matrix Modules across (60 modules) forming a continuous matrix display of 96 pixels across by 25 pixels high (2400 pixels).

8.1.2 The Model 520 shall have a configuration of 5 Pixel Matrix Modules high by 6 Pixel Matrix Modules across (30 modules) forming a continuous matrix display of 48 pixels across by 25 pixels high (1200 pixels).

8.1.3 The Models 500 and 510 CMS shall have a Control Compartment on the front right side of its housing. The Control Compartment shall be accessible through panels on the sign's right end side and the compartment front door.

8.1.4 The Model 520 shall have a Control Compartment on the rear side of its housing. The Control Compartment shall be accessible through the compartment back door.

8.1.5 The Models 500 and 510 CMS systems shall be designed to operate on a Single Phase 120/240VAC Service, rated at 20KVA (minimum) where Xenon pixels are used, or 5KVA (minimum) where LED pixels are used.

8.1.6 The Model 520 CMS system shall be designed to operate on a Single Phase, 120/240 VAC Service, rated at 10KVA (minimum) where Xenon pixels are used, or 5KVA (minimum) where LED pixels are used.

8.1.6 The total weight of the supplied CMS shall not exceed:

Model 500	-	2400 pounds (1089.6kg)
Model 510	-	2000 pounds (908kg)
Model 520	-	1000 pounds (454kg)

A verification of the total weight shall be documented and included in the Certificate of Compliance.

8.1.8 ITEMS SUPPLIED

8.1.8.1 The CMS System shall include the Model 500 CMS or Model 510 CMS or Model 520 CMS as per contract.

8.1.8.2 Controller, Controller Cabinet, Controller Isolation Assembly, CMS Harnesses #4 and #5 and all other required equipment and wiring necessary to operate the system. The Controller shall be State Furnished unless called out in Contract Special Provisions.

8.1.8.3 Step Down Transformer(s) where Xenon pixels are used:

Model 500 & 510	-	Four - 5KVA (one per line) - 120VAC to 20VAC
Model 520	-	Two - 5KVA (one per line) - 120VAC to 20VAC

8.1.8.4 Step Down Transformer where LED pixels are used:

Model 500, 510	-	One - 5KVA - 120VAC to 20VAC
Model 520	-	One - 5KVA - 120VAC to 20VAC

8.1.9 CMS HARNESSES

8.1.9.1 A Harness No. 1 shall be provided between each PMM connector assembly (CA and CB connectors) and its associated PDM CC connector in the associated PXDA.

8.1.9.1.1 Each harness shall consist of:

Required conductor quantity
No. 22 AWG or larger conductors
1 CAS Connector
1 CBS Connector
1 CCP Connector

8.1.9.1.2 Each harness shall be routed in properly supported cable trays.

8.1.9.2 A Harness No. 2 shall be provided between each PXDA CD connector and the associated PDA No. 4 CE connector.

8.1.9.2.1 Each harness shall consist of:

Required conductor quantity
No. 22 AWG or larger conductors
1 CDS Connector
1 CES Connector

8.1.9.3 A Harness No. 3 shall be provided between the PDA No. 4 CF connector and the associated Controller Interface Terminal Block Positions on the CIP.

8.1.9.3.1 The harness shall consist of:

Required conductor quantity
No. 22 AWG or larger conductors
1 CFS Connector
Conductors-Stripped and Tinned

8.1.9.4 A Harness No. 4 shall be provided to interconnect the CMS CIP Panel Terminal Position to the Controller Cabinet CIA Assembly (via C8S and C9S connectors).

8.1.9.4.1 The harness shall consist of:

300 feet (91.46m) of Atlas Cable,
Type A-881or equal
(24 pr. #18 AWG, multicolored pairs)
1 C8S Connector
1 C9S Connector
Logic Signal & DC Logic Ground
Conductors - Stripped and tinned

8.1.9.5 A Harness No. 5 shall be provided to interconnect the CMS CIP Panel Terminal Positions (Current Monitor Circuits) to the TB1 in the Model 334C Controller Cabinet.

8.1.9.5.1 The harness shall consist of:

300 feet (91.46m) of Atlas Cable,
Type A-881or equal
(6 pr. #18 AWG, multicolored pairs)
Conductors - Stripped and tinned

8.1.9.6 The harnesses #4 and #5 shall be neatly rolled up on a wooden reel and prepared for shipping. It shall be so designated and labeled with the associated CMS.

8.1.9.7 All harnesses shall have a minimum of 2 feet (0.610m) of slack available on each connector or connector assembly end and shall be permanently labeled according to connector pin assignments, device addressing and/or function.

8.1.9.8 Harnesses #1and #2 shall provide enough slack, to completely pull the PXDAs out of the equipment rack, to facilitate maintenance.

8.1.10 SPARE PARTS

Spares parts shall meet the requirements of these specifications. The following items shall be included per each delivered Model 500, 510 or 520 CMS system:

2 each - Pixel Matrix Module with pixels (PMM)
5 each - Pixel Driver Module (PDM)
1 each - Pixel Driver Assembly (PXDA)
1 each - CMS Isolation Module
1 each - Controller Isolation Assembly (CIA)

SECTION 2 - PIXEL MATRIX MODULE

8.2.1 GENERAL

8.2.1.1 Each PMM shall consist of 40 Pixels (Xenon lamps in associated lamp sockets and reflectors or LED pixels), module panel, 4 - TSD No. 2, and Connectors CAP and CBP. Each PMM shall be interchangeable.

8.2.1.2 Each PMM shall be secured to the sign support framing at each of its four corners by the TSD No. 2 Devices.

8.2.1.3 All PMM wiring shall be No. 22 AWG or larger.

8.2.2 FORMED PLASTIC COVER

8.2.2.1 Formed Plastic Cover (FPC) shall be coated or treated to reduce glare off of PMM.
The coating or treatment shall not diminish light output by more than 15%.
The outside of the FPC shall be smooth.
The FPC shall maintain a watertight seal against the PMM panel.

8.2.3 PIXELS

8.2.3.1 OPTION 1 - XENON

<u>MODELS 500, 510 & 520</u>

Each lamp shall be CHICAGO MINIATURE Type 1524X or THHC Type 2472X-2, or equal (rated at 7.2 watts at 24 VAC).

The Reflector can either be individual for each pixel or a mold for the entire Pixel Matrix Module. The PMM shall be sealed to prevent any water or dust from coming in direct contact with the reflector or the lamp.

Each lamp socket shall be a brass wedge base rated 20W at 28 VAC with tabs to accommodate PMM wiring.

Each Lamp and Socket shall be rated for outdoor usage, direct weather environment and vibration resistant.

8.2.3.2 OPTION 2 – LIGHT EMITTING DIODE (LED)

<u>MODELS 500, 510 & 520</u>

8.2.3.2.1 GENERAL AND MECHANICAL

Each pixel shall consist of light emitting diodes (LED's).
The maximum weight of a LED PMM shall be 7 lbs. (3.178kg).
Pixel Matrix Modules shall conform to all applicable dimensions as specified in details sections 8-8, 8-9 and 8-10.

Each pixel panel module shall have the manufacturer's name, trademark, model number, serial number permanently marked on the back of the panel. Rated voltage, current, power consumption and volt-amperes (VA) shall also be identified.
The PMM's shall be rated for a minimum useful life of 48 months.
The maximum luminosity degradation shall be less than 15% after 48 month of operation.
All PMM's shall meet all parameters of this specification during this period.

8.2.3.2.2 LED PIXEL TYPE 1

Each LED pixel shall be mounted in a 44.5 mm (1.75 in) (diameter or on a side) x 44.9 mm (1.77 in) (maximum dimensions) length hooded visor shell as shown in Fig 8-8-9.

Each LED pixel shall be mounted 6 degree down off-axis mounting plane (vertical).

The shape of an individual pixel shall be square or circular and the LED's shall be evenly distributed in the pixel.

Each LED pixel (measured from LED to LED on the outside) shall be no larger than 38 mm (1.5 in.) (either diameter or on a side).

Each LED pixel shall be encapsulated for water resistance.

Each LED pixel shall be attached to the module panel using a single crew (M-3) mounting with locating pin

Each pixel shall have two 300 mm (12 in.) leads for electrical connection.
The wiring shall be color coded per TEES Section 1.3.13.6.

The wiring shall be fixed to the back of the PMM to prevent snagging during installation or removal per TEES Section 1.3.13.3.

Electronics shall be encapsulated in each pixel, or covered if a separate, intermediated PC board is used.

8.2.3.2.3 LED PIXEL TYPE 2

Each LED pixel shall consist of an array of LED's mounted on a PC board as shown in Fig 8-8-10.

Entire Pixel Matrix Module shall be sealed and coated for water resistance.

The shape of an individual pixel shall be square or circular and the LED's shall be evenly distributed in the pixel.

Each LED pixel shall be no larger than 38 mm (1.5 in.) (either diameter or on a side).

The electronics on the PC board shall not be visible looking through the FPC except for the LED's.

Wiring and electronics on the back of the PC board shall be covered.

8.2.3.2.4 LIGHT EMITTING DIODES

LED shall be ultra-bright type, AlInGaP

Color shall be yellow, 592 ± 5 nm

All LED's for each pixel shall be from the same manufacturer and same color bin.

The MTBF of the LED devices should exceed 100,000 hrs of operation.

8.2.3.2.5 PHOTOMETRIC REQUIREMENTS

All measurements shall be performed after environmental testing, 24 hours each at –40 ^{0}C (-40 ^{0}F) and 74 ^{0}C (165.2 ^{0}F), and at 25 ^{0}C (77 ^{0}F) (normal operating temperature).

Each pixel shall have a minimum initial brightness of 40 candela, at full bright dimming level (level 7), over the temperature range of –40 ^{0}C to +74 ^{0}C (-40 ^{0}F to 165.2 ^{0}F).

Each pixel shall maintain a brightness of 34 candela throughout the minimum useful life of 48 months at a temperature of 25 ^{0}C (77 ^{0}F).

Each pixel shall have a viewing angle of 30 degrees or more.

A failure of one LED shall not result in a loss of more than 25% of light output

8.2.3.2.6 POWER AND CONTROL

Maximum power consumption shall be 2.0 watts per pixel.

Each pixel shall accept 18 VAC to 28 VAC (22 VAC nominal) as input voltage.

The minimum power factor shall be 0.95.

Each LED pixel shall be compatible with existing PDM (see TEES Section 8.4.6). Each pixel shall respond to dimming control using the stepped triac modes (pulse width modulation) as defined in TEES Section 8.6.2.

8.2.4 MODULE PANEL

The panel shall be fabricated from 1.588mm (0.0625 inch) minimum thick aluminum sheet. After fabrication the panel and support shall be treated with a black color according to Section 5 - Structures and Housing Surface Treatment Requirements.

8.3.1 HOUSING REQUIREMENTS

8.3.1.1.1 The housing shall include, but not be limited to, the following:

Doors	Ventilation
Latches/Handles	Gasketing
Hinges and Door Catches	Cage Supports and Mounting for PMMs and CMS Equipment

8.3.1.2 HOUSING CONTRUCTION

8.3.1.2.1 The CMS housing shall be constructed to present a clean, neat appearance.

8.3.1.2.2 The CMS housing shall be fabricated from 0.125-inch (3.17mm) minimum thick 5052-H32 aluminum alloy and shall be designed to withstand 33 pounds (14.97kg) per square foot as specified in the latest AASHTO publication entitled "Standard Specification for Structural Supports for Highway Signs, Luminaries and Traffic Signals".

8.3.1.2.3 The CMS housing shall have interior cage support frames to mount the PMMs. The cage support frame shall withstand or minimize vibration when the sign is mounted with any number of PMMs.

8.3.1.2.4 The doors, lifting eyes, gasket channels, dual tracks and all supports welded to the housing shall be fabricated of 0.125 inch (3.17mm) minimum thickness aluminum sheet. Bolted on supports shall be either the same material and thickness as the housing or 0.105 inch (2.67mm) minimum steel sheet.

8.3.1.2.5 The exterior Z-bar supports shall be fabricated of 0.250 inch (6.35mm) minimum thickness and the material shall be the same as the CMS housing.

MODEL 500

8.3.1.2.6 A 6 inch (152.4mm) wide border made of the same material as the housing shall encompass the Pixel Matrix Module Section/Array and enclose any open areas around the section/array. The border shall be uniform and painted or treated according to specifications under this section.

MODEL 510 & 520

8.3.1.2.7 A 5-inch (127mm) wide border made of the same material as the housing shall encompass the Pixel Matrix Module Section/Array and enclose any open areas around the section/array. The border shall be uniform and painted or treated according to specifications under this section.

8.3.1.3 WELDING

8.3.1.3.1 All exterior seams shall be continuously welded and each weld shall be uniform flow.

8.3.1.3.2 Welding on aluminum housings shall be done as follows:

8.3.1.3.2.1 On all exterior seams the gas tungsten arc (TIG) process using bare aluminum welding electrodes shall only be used.

8.3.1.3.2.2 On all interior seams the gas metal arc (MIG) or gas tungsten arc (TIG) process using bare aluminum welding electrodes shall be used.

8.3.1.3.3 The aluminum welding electrodes shall conform to the requirements of the American Welding Society (AWS) A5.10 for ER5356 aluminum alloy bare welding electrodes. Procedures, welders and welding operators for welding on aluminum shall be qualified in accordance with the requirements of AWS B3.0, "Welding Procedure and Performance Qualification", and to the practices recommended in AWS C5.6.

8.3.1.3.4 The housing front door frames shall be double flanged out on all 4 sides and shall have strikers to hold tension on and form a firm seal between the door gasketing and the frame. The dimension between the door edge and the housing external surface when the door is closed and latched shall be 0.156 ± 0.08 inch (3.96mm ± 2.03mm).

8.3.1.3.5 Gasketing shall be provided on all door openings and shall be dust-tight. Gaskets shall be 0.25 inch (6.35mm) minimum thickness closed cell neoprene or silicone (BOYD R-10480 or equal) and shall be permanently bonded to the metal. If neoprene is used the mating surface of the gasketing shall be covered with a silicone lubricant to prevent sticking to the mating metal surface. A gasket top channel shall be provided to support the top gasket on the door (prevent gasket gravitational fatigue).

8.3.1.4 ACCESS DOOR AND PANELS

8.3.1.4.1 FRONT ACCESS DOOR

MODEL 500

8.31.4.1.1 For the Model 500, the latching handle shall be on the left side of the front door with hinges on the right side. The latching handle shall be turned clockwise to an angle of 90 ± 5 degrees from the closed position in order to open the door. Latching the door closed from the open position shall be only performed in the counterclockwise direction.

MODEL 510 & 520

8.3.1.4.1.2 The Models 510 and 520 shall have double compartment doors. The latching|handle of the right door shall be on the left side with hinges on the right side. The latching handle shall be turned clockwise to an angle of 90 ± 5 degrees from the closed position in order to open the door. Latching the door closed from the open position shall be only performed in the counterclockwise direction. The left door shall be a mirror image of the right door.

8.3.1.4.1.3 The latching handle shall have provision for padlocking in the closed position. Each handle shall be 0.75 inch (19.05mm) minimum diameter stainless steel with a minimum 0.5 inch (12.7mm) shank. The padlocking attachment shall be placed at 4.0 to 5.0 inches (101.6mm to 127.0mm) minimum gripping length shall be provided.

8.3.1.4.1.4 The latching mechanism shall be a three-point draw roller type. The pushrods shall be turned edgewise at the outward supports and have a cross section of 0.25 inch (6.35mm) thick by 0.75 inch (19.05mm) wide, minimum.

8.3.1.4.1.5 Two-bolt per leave hinges shall be provided to bolt the CMS Housing (at the Control Compartment Section) to the doors. The housing shall have 4 hinges per door. Each hinge shall be 3.5 inches (88.9mm) minimum length and have a fixed pin. The pin ends shall be welded to the hinge and ground smooth. The pins and bolts shall be covered by the door edge and not accessible when the door is closed.

8.3.1.4.1.6 The door shall be provided with catches to hold the door open at both 90 and 180±10 degrees. The catch minimum diameter shall be either 0.375 inch (9.53mm) for plated steel or aluminum rods or 0.25 inch (6.35mm) for stainless steel. The catches shall be capable of holding the door open at 90 degrees in a 80-mph (128.82 km/h) wind acting at an angle perpendicular to the plane of the door.

8.3.1.4.2 SIDE ACCESS PANELS

8.3.1.4.2.1 There shall be two side access panels (top and bottom) for the Model 500 and one side access panel for the Model 510 on the CMS housing right end side adjacent to the Control Compartment. The panels shall be detailed as per Appendix Detail. The panels shall have louvered vents as specified under these specifications.

8.3.1.5 The CMS housing shall be provided with 2 lifting eyes Models 500 and 510, and 1 lifting eye Model 520 to be used when placing the housing on the sign structure. The lifting eyes shall be located where required. Each eye shall have a minimum diameter of 1.00 inch (25.4mm). The fully assembled sign shall have sufficient structural strength to be lifted and moved by either lifting eye, or both lifting eyes, without damage or permanent deformation to any part of the sign. A label shall be attached near each lifting eye reading, "Lift Vertically to Prevent Damage".

8.3.2 SURFACE TREATMENT

8.3.2.1 The Contractor shall have the option of Surface Treatment and Painting described herein or Anodizing:

8.3.2.2 Alternative surface treatment and painting methods must equal or exceed those specified and be approved by CALTRANS Division of Material Engineer Testing Services (METS) - Chemical Branch.

8.3.2.3 ANODIZING

8.3.2.3.1 An anodic coating shall be applied to the aluminum surface after the surface has been cleaned and etched. The cleaning and etching procedure shall be to immerse in inhibited alkaline cleaner at 71° C for 5 minutes (Oakite 61A, Diversey 909 or equivalent in mix of 6 to 8 ounces per gallon (45.26gram to 60.34gram per liter) to distilled water). Rinse in cold water. Etch in a sodium solution at 66° C for 5 minutes (0.5 ounce (14.18gram) sodium fluoride plus 5 ounces (141.75gram) of sodium hydroxide mix per gallon (3.79liter) to distilled water). Rinse in cold water. Desmut in a 50% by volume nitric acid solution at 20° C for 2 minutes. Rinse in cold water.

8.3.2.3.2 The anodic coating shall conform to MIL-A-8625C (Anodic coatings for Aluminum and Aluminum Alloys) for Architectural Class II A34 Coating with flat black dye required on the CMS front surface. The black surface coating shall have a design life of a minimum of 10 years.

8.3.2.3.3 The anodic coating shall be sealed in a 5% aqueous solution of nickel acetate (pH 5.0 to 6.5) for 15 minutes at 99° C.

8.3.2.3.4 Black anodic coating shall be applied to the 6-inch border on the entire front face of the CMS housing, screen assembly frames, the 60 PMM panels and front access door. All other surfaces shall be treated with clear anodic coating.

8.3.2.4 SURFACE TREATMENT FOR PAINTING

The CMS unit assemblies such as the PMM panels, front and side access doors, etc. shall be treated prior to painting. The treatment steps are as follows:

1. Surface treat aluminum in accordance with the provisions of ASTM D-1730, Type B, Method 6 or Method 7. Immediately prior to treatment, the aluminum surfaces shall be cleaned following the procedures in either ASTM D-1730, Type A, Method 3 or ASTM D-1730, Type B, Method 1.

8.3.3 PAINTING

8.3.3.1 GENERAL

8.3.3.1.1 After applications of the primer all exposed area of primed surfaces shall receive a minimum of 2 finish coats of paint conforming to the requirements for White Tintable Finish Paint Waterborne, Formula PWB-164, Revised or exterior grade latex paint conforming to the following:

Property	Value	ASTM Designation
Pigment content,%	24 Max	D3723
Nonvolatile content Wt%	49 Min.	D2369
Viscosity, KU	75 Min. to 90 Max.	D 562
Fineness of grind Hegman	6 Min.	D1210
Drying time at 77° F 50% RH, 4 mil wet film		D1640
Set to touch, minutes	30 Max.	
Dry through, hours	1 Max.	

No visible color change in the finish coats shall occur when tested according to ASTM Designation: G 53 using FS 40 UV- B bulbs for a min. of 38 cycles. The cycle shall be 4 hours UV exposure at 60° C and 4 hours condensate exposure at 40° C. The vehicle shall consist of 100% acrylic latex with a minimum of necessary additives.

8.3.3.1.2 Individual batches/lots of paints will require testing by the METS – Chemical Branch to assure compliance with specification requirements prior to use unless otherwise approved by the engineer. 8in x 8in (203.2mm x 203.2mm) sample panels coated according to the requirements of these specifications and the following shall be provided for testing and approval with 90 days of award of contract. Two sample panels shall be provided for each color of finish paint. Each color panel shall be the same type aluminum specified to receive that color finish. When more than one type aluminum is required 2 panels of each color on each type shall be submitted.

8.3.3.2 APPLICATION

8.3.3.2.1 After a complete Surface Treatment process, one coat of vinyl wash primer with one part acid and four parts resin shall be applied. One part of acid is to be slowly added with constant stirring to four parts by volume of the resin just before use. The mixed components must be used within 8 hours. Vinyl wash primer is formulated for spray application only and shall be applied to a dry film thickness of 0.3 to 0.5 mils.

8.3.3.2.3 After application of the vinyl wash primer all exposed surfaces shall receive a minimum of 2 finish coats of an exterior grade acrylic latex paint. The first finish coat shall be tinted by the manufacturer to provide a color to contrast with the final finish coat. The total dry film of the first finish coat shall be not less than 2 mils.

8.3.3.3 THE SECOND FINES COAT COLER SHALL MATCH THE FOLLOWING:

8.3.3.3.1 Federal Standard 595a No. 37038 to be applied to the 6-inch (152.4mm) border on the front face of the CMS housing including, screen assemblies Control Cabinet Door and the 60 Pixel Matrix Module Panels.

8.3.3.3.2 Federal Standard 595a No. 37769 to be applied to the CMS housing including Z-Bars.

8.3.3.3.3 The total dry film thickness of all applications of the second finish coat shall be not less than 2 mils or more than 4 mils.

8.3.3.3.4 The 2 finish coats shall be applied in 2 or more applications to a total dry film thickness of not less than 4 mils or more than 8 mils.

8.3.3.3.5 The total dry film thickness of all paint applications shall be not less than 4.3 mils or more than 8.5 mils.

8.3.3.3.6 A minimum drying time of 12 hours shall be allowed between finish coats.

8.3.3.3.7 After finish paint has cured adequately, the adhesion of the coating to the substrate when tested according to ASTM Designation: D 3359, Test Method A shall be 4A or higher.

8.3.4 VENTILATION

8.3.4.1 The CMS housing shall be provided with the necessary louvered vents on both sides of the housing and below the housing to provide sufficient ventilation as described below.

8.3.4.2 There shall be no active ventilation such as electric fans or other devices in the CMS housing except in the CMS Control Compartment.

8.3.4.3 The CMS Control Compartment shall have a ventilation system including intake, exhaust, filtration, fan assembly and environmental control. A louvered vent of 0.25 inches (6.35mm) in depth maximum shall be provided and positioned near the bottom on the lower panel of the CMS Sign Housing rightside. A removable and reusable filter filting in a fan mounting shell shall cover the vents and shall be held in place with bottom and side brackets and a spring-loaded top clamp.

8.3.4.3.1 The intake (including filter) and exhaust areas shall pass a minimum of 60 cubic feet (1.69 m^3) of air per minute.

8.3.4.3.2 The fan assembly shall have ball or roller bearings and a capacity of at least 60 cubic feet (1.69 m^3) of free air delivery per minute.

8.3.4.3.3 The fan assembly shall be a thermostatically controlled device adjustable to turn ON between 33° C and 65° C with a differential of not more than 6° C between automatic turn ON and OFF. Thermostat indication shall be marked in 10° C increments. Manual adjustment shall be provided.

8.3.4.3.4 The filter material shall be a McMaster-Carr Permanent Washable Air Filter No. 2069K12 or equal.

8.3.4.3.5 The fan assembly shall be mounted on the CMS Control Compartment lower right side and exhaust into the Pixel Matrix Module Section.

SECTION 4 - CONTROL COMPARTMENT

8.4.1 GENERAL

8.4.1.1 CMS Control Equipment and associated wiring shall be furnished and installed in the Control Compartment. The equipment shall consist of:

One - CMS Interface Panel (CIP)
One - Power Distribution Assembly No.4 (PDA No.4)
Five - Pixel Driver Assemblies (PXDAs)

MODEL 500 & 510

Sixty - Pixel Driver Modules (PDM)
Where Xenon Pixels are used, Four - 5 KVA Transformers
Where LED Pixels are used, One - 5 KVA Transformer

MODEL 520

Thirty - Pixel Driver Modules (PDM)
Where Xenon Pixels are used, Two - 5KVA Transformers
Where LED Pixels are used, One - 5 KVA Transformer

8.4.1.2 All panels and assemblies shall be mounted on the 19-inch (482.6mm) Rack.

8.4.1.3 All circuit breakers, fuses, switches and indicators shall be readily visible and accessible when the CMS Control Compartment Front Door is open except for the PDM fuses which shall be located near the PDM connector.

8.4.1.4 All equipment when called out shall be clearly and permanently labeled. Marking strips shall be made of material that can be easily and legibly written on using a pencil or ballpoint pen. Marker strips shall be located immediately below the item to be identified and must be clearly visible with the item installed.

8.4.1.5 The assembly or panel depth dimension shall include the terminal blocks and assembly mounted part of the connectors.

8.4.1.6 All assemblies and panels shall allow air circulation through its top and bottom unless specifically called out otherwise.

8.4.1.7 Assemblies shall be fabricated of 0.0625-inch (1.59mm) minimum thickness aluminum sheet with metal surface treated with either clear chromate or anodized.

8.4.2 19-INCH EIA RACKS

8.4.2.1 The 482.6mm (19-inch) EIA Rack shall be installed a minimum of 25.4mm (1.0 inch) inside the Control Compartment Front Door for mounting of the Control Equipment.

8.4.2.2 The 482.6mm (19-inch) EIA Rack shall consist of a pair of continuous adjustable equipment mounting angles. The angle nominal thickness shall be either 3.42mm (0.1345 inch) plated steel or 2.67mm (0.105") stainless steel. The angles shall be tapped with 10 - 32 threads with EIA universal spacing. The angle shall comply with Standard EIA RS-310-B and shall be supported at the top and bottom.

8.4.2.3 Clearance between the mounting angles for mounting equipment shall be 450.85mm (17.75 inches).

8.4.2.4 The Model 500 vertical mounting surface shall be a minimum of 1689.10mm (66.5 inch) and the Models 510 and 520 vertical mounting surface shall be a minimum of 1168.4mm (46 inch).

8.4.2.5 The top of the mounting area to the center of the first screw hole shall be a minimum of 9.53mm (0.375 inch).

8.4.3 CMS INTERFACE PANEL (CIP)

8.4.3.1 The CIP mounting surface used for required equipment shall be recessed if necessary so that the equipment front surface is even with the CIP rack mounting front surface. The CIP shall have a maximum depth of 203.2mm (8 inch).

8.4.3.2 Service equipment and conductors shall be separated and isolated from the Controller Interface Terminal Blocks and Harness No.3.

8.4.3.3 A Twenty (20) Position minimum AC- Copper Bus(es) shall be provided. Two (2) 1/0 AWG wiring lugs shall be available on the Bus for AC Neutral Service Termination. The Bus shall have minimum ampacity capability of 400 Amperes. Nylon screws or standoffs shall be used to provide 500 megohms isolation between AC- and Equipment Ground & DC Logic Ground when tested at 250 VDC.

8.4.3.4 A Two (2) Position termination lug shall be provided for Equipment Ground on the CIP. A #10 AWG Conductor shall be routed from the CMS frame termination to the CIP and from the CIP to PDA #4, T2 Block Position #8.

8.4.3.5 The Equipment Ground shall be connected directly to the CMS Frame.

8.4.3.6 Where Xenon Pixels are used, a 4-Pole 50 Ampere minimum rated circuit breaker shall be installed on the panel and designated for CMS Main Disconnect.

8.4.3.7 Where LED Pixels are used, a 2-Pole 30 Ampere minimum rated circuit breaker shall be installed on the panel and designated for CMS Main Disconnect.

8.4.3.8 Disconnect Line and Load Side Lugs shall accommodate No. 1/0 AWG Conductors.

8.4.3.9 Where Xenon Pixels are use, thirty 1 Pole 20 Ampere PXDA Circuit Breakers shall be furnished and installed to protect the PXDA Busses, 6 per PXDA. The Breakers shall be split into 15 breakers per lines L1 and L2 (1st 120 VAC leg) and 15 breakers per lines L3 & L4 (2nd 120 VAC leg). See detail 8-8-3 for Assignments.

8.4.3.10 Where LED Pixels are used, thirty 1 Pole 20 Ampere PXDA Circuit Breakers shall be furnished and installed to protect the PXDA Busses, 6 per PXDA. The Breakers shall be split into 15 breakers per lines L1 and L2 (120 VAC leg). See detail 8-8-3 & 8-8-4 for Assignments.

8.4.3.11 CONTROLLER INTERFACE

8.4.3.11.1 A 44 Position Phoenix Contact, Type MBK 2.5/E, DIN Terminal Block or equal (CITB) shall be installed on the panel for CMS Harnesses #3, #4 and #5 termination.

8.4.3.11.2 CITB Terminals shall accommodate No.18 AWG conductors. Strain relief shall be provided for incoming Harnesses #4 & 5 Cable(s).

8.4.4 POWER DISTRIBUTION ASSEMBLY No. 4 (PDA No. 4)

8.4.4.1 The PDA No. 4 shall meet all the requirements of the Power Distribution Assembly as specified in the TSCES (Chapter 6) including details as applicable except for the following:

8.4.4.1.1 The PDA No. 4 shall consist of:

1	--	Duplex NEMA 5-15R Equipment Receptacle with GFI
1	--	1 Pole 15 Amperes, 120 VAC Equipment Circuit Breaker
1	--	1 Pole 15 Amperes, 120 VAC Main (includes Model 206 and Temp Control) Circuit Breaker
1	--	Model 206 Power Supply Module (+24 VDC) and Socket
1	--	10 Position Terminal Block T2
1	--	4 Position Terminal Block T3
1	--	CFP Connector
5	--	CEP Connector
1	--	CMS Isolation Module (CMS ISO MOD) and Socket Connector

8.4.4.1.2 Retaining Devices shall be provided mounted above the ISO Module and Model 206 Power Supply Module. Each device when locked down shall prevent the module from backing out of its connector. When not in use the device shall rest in a position allowing the module removal or insertion.

8.4.4.2 CMS Isolation Module (CMS ISO MOD)

8.4.4.2.1 The module shall optically isolate, receive/drive and condition DC Logic Signals from the Controller Cabinet (CIA) complying to RS 423 Standards at a minimum distance of 152.40m (500 Feet).

8.4.4.2.2 The total module load current shall not exceed 100 mA of +24 VDC power. Logic Voltage between the ISO Module and the LDMs shall be +12 VDC. The CIA Assembly shall supply the power for interface circuitry between the ISO Module and the CIA.

8.4.4.2.3 The front panel shall be fabricated of 2.29mm (0.090 inch) minimum thickness aluminum or stainless steel sheet. A momentary toggle switch shall be provided on the module front panel for Sign Lamp Test Function. Five indicators shall be provided on the front panel of the module to indicate the Dimming Signal, Clear State, Clock Signal, Device Enable and PXDA Latched State.

8.4.4.2.4 The addressing of the PXDAs shall be implemented on the module by decoding the upper three binary bits 5, 6 and 7 of the address bus to generate the PXDA select lines designated 1 through 5 (See Appendix details).

8.4.4.3 The CMS ISO MOD and PDMs shall have exclusive use of the Model 206 Power Supply.

8.4.4.4 A Gas Tube type Surge Protector shall be provided across T2 terminal positions 8(EGND), 9(AC+), and 10(AC-).

8.4.5 PIXEL DRIVER ASSEMBLY (PXDA)

8.4.5.1 The assembly shall have a maximum depth of 241.3mm (9.5 inch) (includes connector assemblies on rear of assembly).

8.4.5.2 The assembly shall intermate and support 12 PDMs, provide interface between the PDMs to the associated PMM, route AC and DC power to the PDMs and interface control signal lines to the PDMs.

8.4.5.3 The assembly shall have a PCB Motherboard for routing circuits to and from the lamp driver assembly connectors; PDM Connectors (1 through 12), CC Connectors (1 through 12), CD Connector, and the 6-position terminal blocks (or four 3 position).

8.4.5.3.1 Intercomponent wiring shall be by laminated copper clad track having a minimum weight of 4 ounces per square foot with adequate cross section for current to be carried.

8.4.5.3.2 All assembly connectors shall be mechanically supported to the frame of the assembly.

8.4.5.3.3 The PXDA-PDM connector shall be a 43/86S PCB Connector vertically centered. Guides, top and bottom, shall be provided to insert and support the PDM. The connector contacts shall start with pin 1 at the upper left when viewed from the PXDA front.

8.4.5.3.4 The AC+ and AC- Buses shall be routed across the PXDA from both sides (Terminal Block TBA1 assigned to PDM Connectors 7 to 12 and TBA2 assigned to PDM Connectors 1 to 6). The AC-Bus(s) and return shall be able to carry a minimum 60 Ampere Load. TB1 and TB2 blocks may be divided into four(4) 3 position Terminal Blocks, two for power and two for AC neutral.

8.4.6 PIXEL DRIVER MODULE (PDM)

8.4.6.1 GENERAL REQUIREMENTS

8.4.6.1.1 The module PCB connector shall be a 43/86P.

8.4.6.1.2 Each module shall be interchangeable without modification or alteration to the module connectors and/or circuitry.

8.4.6.1.3 One PDM shall exclusively control and operate one PMM.

8.4.6.1.4 Address lines incoming from the CMS ISO MOD (The 4-bit PDM Address lines and the associated PXDA Select line) shall be compared with the PDM slot address I.D. lines and PXDA Select I.D. lines on the module.

8.4.6.1.4.1 The slot address I.D. lines shall be decoded and implemented using hard-wire logic on the PXDA Motherboard adjacent to the PCB 43/86S connector. Five I.D. lines minimum shall be used as follows; the first four I.D. lines 1 to 4 shall be compared to the incoming PDM Address lines and the I.D. line 5 shall be compared to the incoming PXDA Select line.

8.4.6.1.4.2 Jumper wires, dip switches, and shunt jumpers shall not be used to decode and implement the hard-wire logic. Permanent solder traces with a resistor network or equal may be allowed.

8.4.6.1.5 The module shall be fused protected on the three incoming AC+ traces with three-5 Amperes Medium Blow Type Fuses. The Triac Load shall be evenly divided through the fuses and the three power buses (14, 13 and 13). The pattern shall be the same for all LDMs.

8.4.6.1.6 No more than 80 mA of +24 VDC power shall be used by each PDM.

8.4.6.2 FEATURE REQUIREMENTS

8.4.6.2.1 The module shall consist of serial shift registers with parallel and latched tri-state outputs, 40 optically coupled triac drivers, 40 pixel load triacs and support circuitry to interface and control DC logic control signals to an external pixel load.

8.4.6.2.2 Pixel Load Triac Ratings:

1. 8 AMP On- State RMS Current
2. 40 AMP Peak Surge Current for 1 full AC Cycle
3. 400 Volt RMS Blocking Voltage minimum
4. Maximum 1 ma Leakage Current either direction
5. Maximum 3 us Turn On Time
6. Maximum 5 AMP DC Gate Trigger Current
7. The Triac shall not be a sensitive gate type

8.5.1 GENERAL

8.5.1.1 The CMS System consists of the Model 500, 510 or 520 CMS, Harnesses No. 4 and No. 5 Interconnect, the CIA resident in the Controller Cabinet and the Controller. This section shall detail the interface and control requirements that mate the controller to the CMS.

8.5.1.2 A systems check shall consist of running the Caltrans' DAT CMS (Diagnostic and Acceptance Testing for the Changeable Message Sign) Software Program with the CMS (Complete interconnection and interface of CMS, Controller, CIA, Controller Cabinet and associated equipment).

8.5.1.3 Prior to the delivery of the Model 500, 510 or 520 CMS, a verification certificate shall be submitted to the Engineer. The certificate shall show that a systems check has been performed and the system has functioned properly under the Engineer's guidelines.

8.5.1.4 CIA AC+ power shall be connected to cabinet PDA #3 via a 3-foot (9.15m) NEMA Type 5-15P grounding type plug. The controller duplex receptacle shall be used for power source.

8.5.2 CMS CONTROL ISOLATION ASSEMBLY (CIA)

8.5.2.1 The CIA shall function as the isolation / driver interface between the Controller and the CMS, Sense light and AC voltage levels, sense the 4 power line current levels, read the Controllers Dim Level Select Lines and via selected level points control the Triac Turn On Point and provide CMS Soft Start Feature.

8.5.2.2 The CIA shall optically isolate, receive / EIA drive and condition DC Logic Signals to and from the CMS ISO Module complying to 423 Standards at a minimum of 500 ft (152.40m). The system shall be capable of writing to all 60 PDMs within 100 ms.

8.5.2.3 The CIA shall sense the 5 CIA Control Lines (Line 4 is reserved) and react as follows:

CIA CONTROL LINES 3 2 1	5	FUNCTION	RANGE
0 0 0	0*	Power Line 1	0 - 100 AMPs *
0 0 1	0*	Power Line 2	0 - 100 AMPs *
0 1 0	0*	Power Line 3	0 - 100 AMPs *
0 1 1	0*	Power Line 4	0 - 100 AMPs *
1 0 0		Photo Cell	0 - 5 VDC
1 0 1		AC+ Line	75 - 150 VAC
1 1 0		Test	+5 VDC
1 1 1		Test	0 VDC

- Line 5 Logic 1 shall decode Power Line Range to 0 - 10 AMPs

8.5.2.3.1 The selected function shall present to the controller via the 8 Sense Lines its range in 256 increments (binary with Line 1 equal to the least significate bit). The Values shall be linear over the range. Sense output shall be compatible with the controller unit. The A/D convertor shall be a ADC 804 or equal with conversion triggered by a CLOCK Input. Conversion shall be completed within 250 us.

8.5.2.4 DIM Control shall be as called out under Specifications 2.4. The CIA shall read the Photo Cell Sensor Output and the incoming AC Voltage report to the controller. The controller shall decode the Dim Control Level via the three DL Lines as Follows:

LINES 1 2 3	FUNCTION
0 0 0	Turn Sign Off, NO ON PULSE
1 0 0	Adjustment Level 1 (Lowest intensity Level)
010 to 110	Adj. Levels 2 to 6
1 1 1	Adjustment Level 7 (Highest intensity Level)

8.5.2.4.1 The selected level shall be matched to a DIM Control Phase Triggering Point adjustable by an individual 10 turn (min.) discrete potentiometer accessible from the front panel The Phase Triggering Pulse shall be mirrored back to the controller.

8.5.2.5 Four toroidal current monitoring devices (BICRON ELECTRONICS B5303 or equal) installed on the secondary side on each of the Four Power Lines (CMS Main Disconnect) shall input via C10 Connector to the current sensing circuitry and upon request to the A/D Convertor.

8.5.2.6 The CIA shall upon request run a self check on the A/D Convertor - Sense Lines. A +5 VDC Request shall provide a "FF" Response. A 0 VDC Request shall provide a "00" Response.

8.6.1 334 CABINET

8.6.1.1 The Controller Cabinet shall comply with the Transportation Electrical Equipment Specifications (TEES), Chapter 1, dated August 16, 2002; and the TSCES, Model 334 Cabinet Specifications, Chapter 6, dated January 1989 with the following amendments:

8.6.1.2 Amend Specification 6.1.1.3 "Model 334 Cabinet (Ramp Meter)" to read "Model 334C Cabinet".

8.6.1.3 Amend Input Panel #3 detail in TSCES-9 plan sheet with the details in Appendix A called "Model 334C Cabinet, Input File No. 3-Upper Part" and "Model 334C Cabinet, Input File No. 3-Lower Part".

8.6.1.4 At the Contractor's Option, DIN Terminal Block conforming to TB1 Block type may be provided in lieu of TB2 to TB6 Terminal Blocks and EG Buses. The terminal position requirements shall match Input Panel #3 needs. EG Segments shall be located between Detector connection segments for field cable shield grounding. The DIN Railing shall be located vertical, centered on the panel. Spade Lugs are not required with this option.

8.6.1.5 Amend "Model 208 Monitor Unit Pin Assignment" detail in TEES, dated August 16, 2002 plan sheet as follows:

MODEL 208 MONITOR UNIT PIN ASSIGNMENT

PIN	FUNCTION
1/44	DC Ground
2/43	WDT Ext. Reset
5/40	WDT IN
10/35	+24 VDC
15/30	AC-
17/28	Normally Open, Circ. #2
19/26	AC+
20/25	Normally Closed, Circ. #1
21/24	Circ. Common #1 & #2
22/23	WDT Lamp (External)

NOTE:

Card connector keyed between pins 2 & 3, and pins 11 & 12.

8.6.2 LIGHT LEVEL CONTROL SYSTEM

8.6.2.1 GENERAL REQUIREMENTS

8.6.2.1.1 The Light Level Control System shall consist of the Photo electric sensor, the incoming AC power line sense, the comparator / controller report circuitry and the Dimmer Control Circuitry all resident in the CIA Unit. The system shall sense the background ambient light level (range 0 to 5 Volts) and provide sense levels to the controller via the 8 Sense Lines. The AC Line shall be sensed between 75 to 150 VAC and reported back to the controller via sense lines. The Dimmer Control Circuit shall read the three Dim Level select lines from the controller and control the Triac Turn On Point.

8.6.2.1.2 Background ambient light levels for pixel dimming and background light sensing shall be adjusted and pre-set at the factory prior to delivery to the STATE. Potentiometer settings shall match each light level setting designated by number from level 1 to 7, where level 1 is lowest light level and level 7 is highest (brightest) light level.

8.6.2.2 FEATURE REQUIREMENTS

8.6.2.2.1 Background Light Sensing Circuitry

8.6.2.2.1.1 A commercially available photo-electric sensor in a EEI-NEMA type twist lock receptacle or equal, metal enclosure shall be installed on the Controller Cabinet, where the sensor shall not be affected by artificial lighting.

8.6.2.2.1.2 The photo-electric sensor shall be a EG and G VACTEC Type VT521H or equal.

8.6.2.2.1.3 The photo-electric sensor shall be capable of being continually exposed to direct sunlight without impairment of its performance.

8.6.2.2.1.4 The watertight metal enclosure shall have a 1.00 square inch ($2.54cm^2$) glass window area to assure full exposure of photocell to ambient light.

8.6.2.2.1.5 The Photo- electric sensor output lines shall be routed to Cabinet Terminal Block TB1 and via C10 to the CIA. The outputs shall be electrical compatible with the CIA Input circuitry.

8.6.2.3 Pixel Dimming Circuitry - CIA

8.6.2.3.1 The pixel dimming circuit shall allow the AC power to be switched at any point from 10 degrees to 120 degrees and from 190 degrees to 300 degrees for each pixel intensity.

8.6.2.3.2 Each pixel intensity sine wave switch point shall vary 5 degrees (maximum) when the dimming circuit is exposed to temperature changes ranging from $+25^0C$ to $+65^0C$ and from $+25^0C$ to -30^0C.

8.6.2.3.3 Each pixel intensity shall be adjusted by a discrete wirewound 10-turn potentiometer. Each potentiometer shall use 90% (maximum) of its adjustment range throughout the sine wave switching range specified.

8.6.2.3.4 The pixel dimming circuit shall read 3 Dimmer Level inputs (read in binary, Line 1 least significant), from the controller to select the 8 set conditions of dim control for the CMS (Selection "0" shall allow no Dim Control output or BLANK Sign).

8.6.2.3.5 The pixel dimming circuit shall have electrical devices installed to minimize 60 Hz noise on the AC load lines.

8.6.2.3.5.1 Each noise eliminator shall cause the slope of the switch-on across the pixels to rise at between 8V per degree and 20V per degree across the AC voltage sine wave.

8.6.2.3.5.2 Each noise eliminator shall eliminate overshoot across the AC voltage sine wave when the pixel load voltage reaches its maximum.

8.6.2.4 The DIM Control Line shall control all 60 PDM Triac Turn On Points. The DIM Control Circuitry shall relay back to the Controller a Phase Fire Pulse of 200 us nominal indicating Triac Turn On pulse. The DIM Control shall, also, provide Soft Start Feature. Soft Start shall use the DIM Control line to reduce in rush current at pixel turn on or message change. Soft Start shall have a six AC cycle minimum step between 160 deg to 10 deg and 340 deg to 190 deg.

SECTION 7

GENERAL CMS PLAN DETAILS

CMS SYSTEM BLOCK DIAGRAM	8-7-1
CMS SYSTEM AC WIRING DIAGRAM	8-7-2
PIXEL DRIVER MODULE CIRCUIT BLOCK DIAGRAM	8-7-3
PIXEL DRIVER ASSEMBLY, FRONT VIEW	8-7-4
PIXEL DRIVER ASSEMBLY, REAR VIEW	8-7-5
PIXEL DRIVER MODULE	8-7-6
CONTROLLER ISOLATION ASSEMBLY	8-7-7
MODEL 334C CABINET, INPUT FILE NO. 3 -- UPPER PART	8-7-8
MODEL 334C CABINET, INPUT FILE NO. 3 -- LOWER PART	8-7-9
CMS INTERFACE PANEL	8-7-10
CMS LED INTERFACE PANEL	8-7-11
CMS INTERFACE PANEL TERMINAL BLOCK	8-7-12
PDA NO. 4	8-7-13
CMS ISOLATION MODULE	8-7-14
PIXEL MATRIX MODULE - ADDRESS CONFIGURATION PIXEL ASSIGNMENTS AND LOAD DISTRIBUTION	8-7-15
CMS DEVICE ADDRESS ASSIGNMENT	8-7-16
CMS TIMING DIAGRAM	8-7-17
CMS CONNECTOR DETAIL	8-7-18
HARNESS NO. 1 WIRING LIST (Interconnection between PDM and PMM)	8-7-19
HARNESS NO. 2 WIRING LIST (Interconnection between PXDA and PDA NO. 4)	8-7-20
HARNESS NO. 3 WIRING LIST (Interconnection between PDA NO. 4 and CIP)	8-7-21
HARNESS NO. 4 AND HARNESS NO. 5 WIRING LISTS	8-7-22
HARNESS NO. 4 AND HARNESS NO. 5 COLOR CODE WIRING LISTS	8-7-23
HARNESS NO. 5 AND TB1 WIRING LIST	8-7-24
MODEL 334C HARNESS NO. 2 (Interconnection between Cabinet and Controller)	8-7-25
PDA NO. 4 CMS ISO MOD AND CFP CONNECTOR ASSIGNMENTS	8-7-26
PDA NO. 4 CMS CE (A to E) and TERMINAL BLOCK CONNECTOR ASSIGNMENTS	8-7-27
PIXEL DRIVER MODULE CONNECTOR ASSIGNMENTS	8-7-28

SECTION 7

GENERAL CMS PLAN DETAILS

CONTROLLER ISOLATION ASSEMBLY CONNECTOR PIN ASSIGNMENTS FOR C8P AND C9P CONNECTORS	8-7-29
DIRECT MODE DB9 COMMUNICATIONS CABLE	8-7-30
MODEM DB9 COMMUNICATIONS CABLE	8-9-31
DIRECT MODE DB-25 COMMUNICATIONS CABLE	8-7-32
MODEM DB-25 COMMUNICATIONS CABLE	8-7-33
GDI MODEM DB9 COMMUNICATION CABLE	8-7-34

NOTES/KEY:

Harness #1 - CAP/CBP to CCP (60 each)
Harness #2 - CDP to CEP (5 each)
Harness #3 - CFP to CITB (secondary side - 1 each)
Harness #4 - C8/C9 to CITB (primary side - 1 each)
Harness #5 - CITB (primary side) to TB1

● - Connector Socket/Plug
S - sockets w/ male pins located on equipment
P - plugs w/ female pins located on harness ends

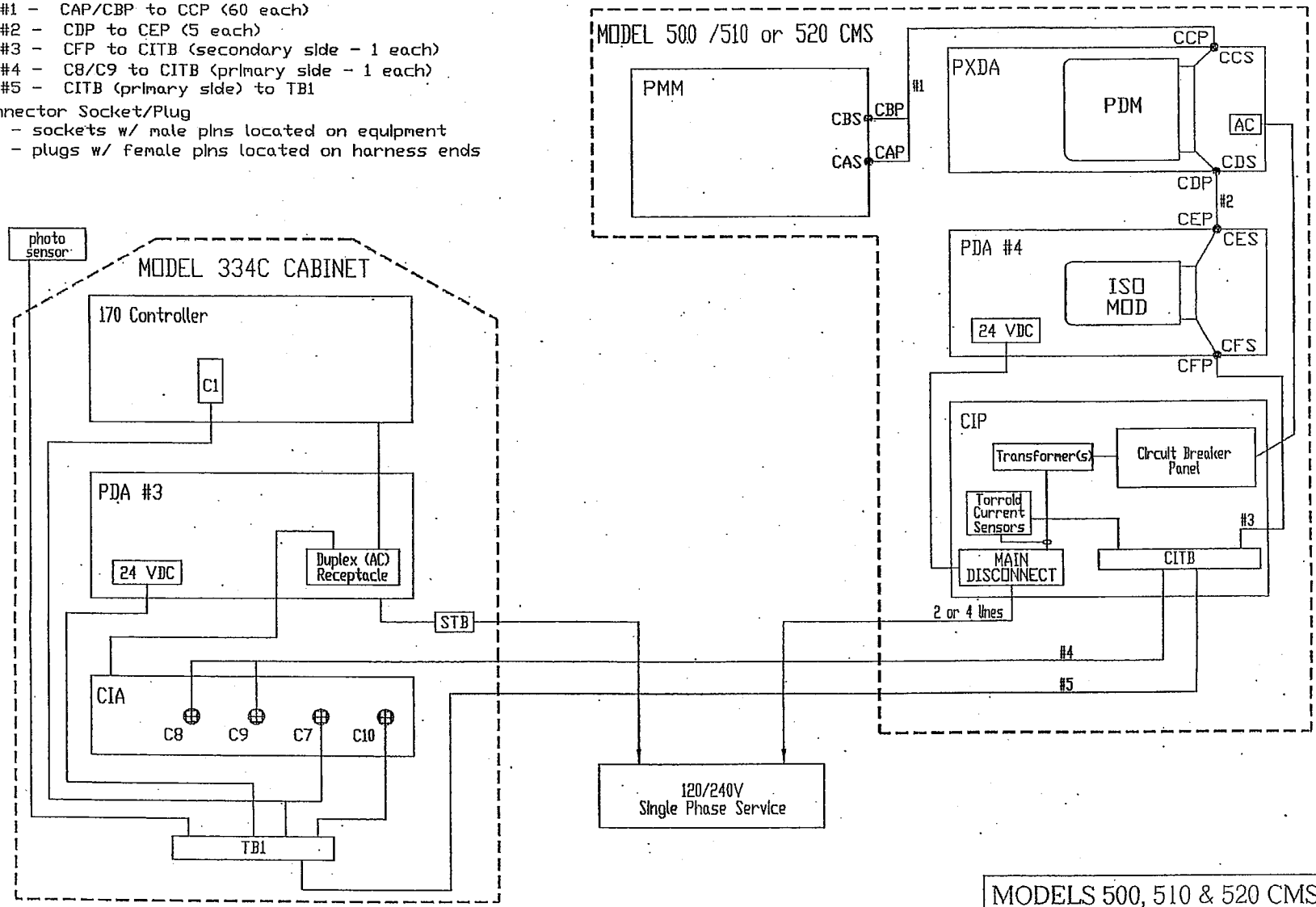

MODELS 500, 510 & 520 CMS SYSTEM		
Title: System Block Diagram		
No Scale	FEBRUARY 2003	8-7-1

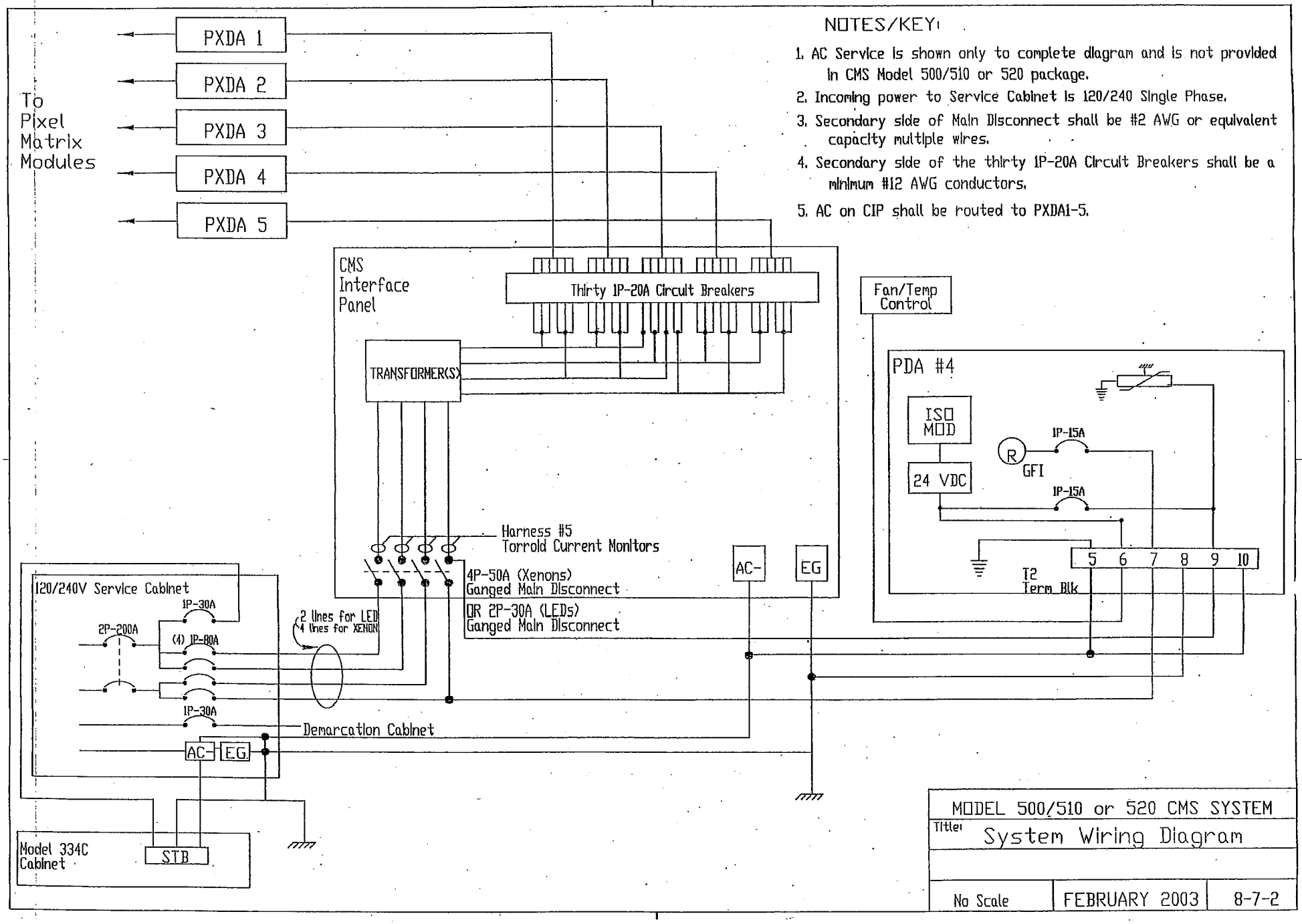
To Pixel Matrix Modules
PXDA 1
PXDA 2
PXDA 3
PXDA 4
PXDA 5
CMS Interface Panel
Thirty 1P-20A Circuit Breakers
TRANSFORMER(S)
Harness #5
Torroid Current Monitors
4P-50A (Xenons)
Ganged Main Disconnect
OR 2P-30A (LEDs)
Ganged Main Disconnect
2 lines for LED
4 lines for XENON
120/240V Service Cabinet
1P-30A
2P-200A
(4) 1P-80A
1P-30A
Demarcation Cabinet
AC-
EG
Model 334C Cabinet
STB
AC-
EG
Fan/Temp Control
PDA #4
ISO MOD
24 VDC
1P-15A
R
GFI
1P-15A
5 6 7 8 9 10
T2 Term Blk
NOTES/KEY:
1. AC Service is shown only to complete diagram and is not provided in CMS Model 500/510 or 520 package.
2. Incoming power to Service Cabinet is 120/240 Single Phase.
3. Secondary side of Main Disconnect shall be #2 AWG or equivalent capacity multiple wires.
4. Secondary side of the thirty 1P-20A Circuit Breakers shall be a minimum #12 AWG conductors.
5. AC on CIP shall be routed to PXDA1-5.
MODEL 500/510 or 520 CMS SYSTEM
Title: System Wiring Diagram
No Scale
FEBRUARY 2003
8-7-2

PIXEL DRIVER MODULE CIRCUIT BLOCK DIAGRAM

No Scale

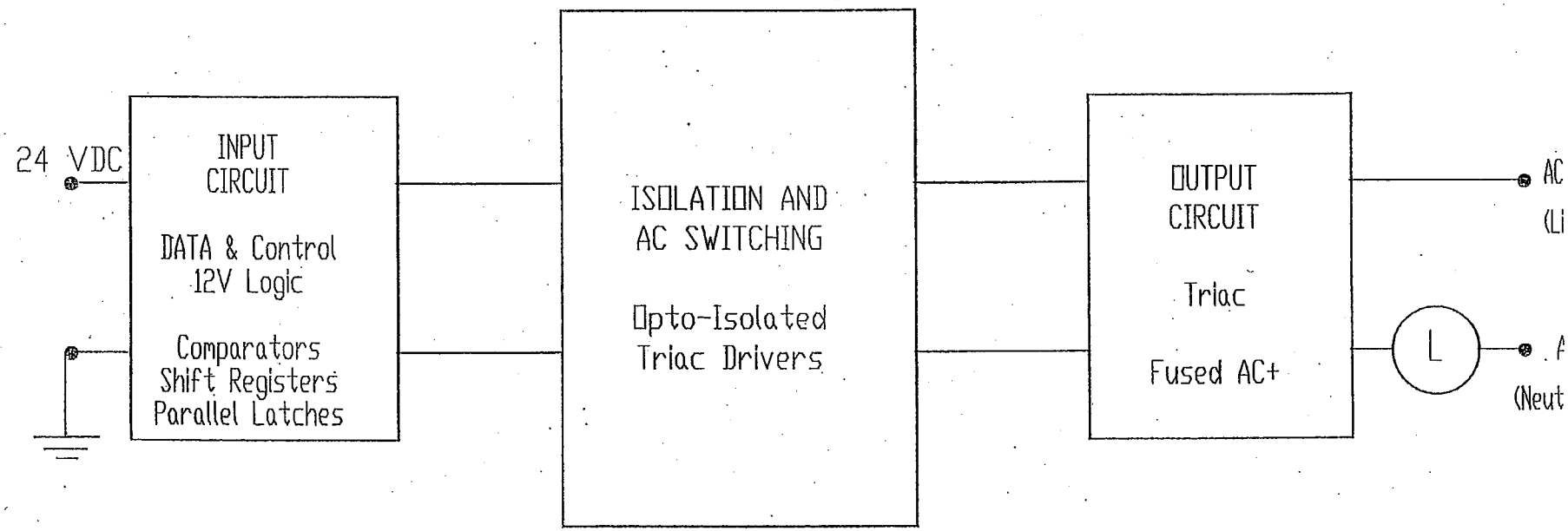

PIXEL DRIVER ASSEMBLY DETAIL

FRONT VIEW

No Scale

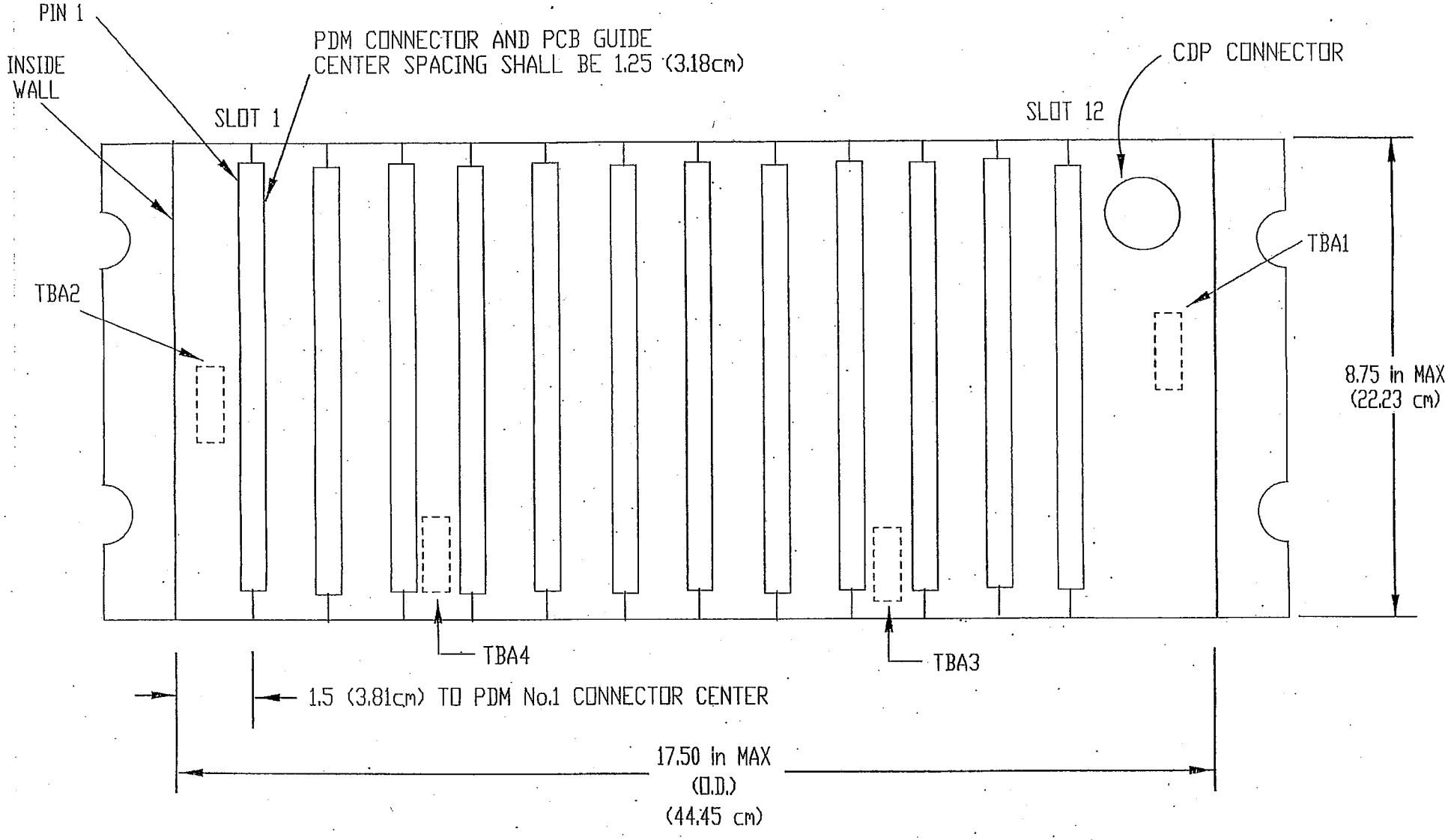

PIXEL DRIVER ASSEMBLY DETAIL

REAR VIEW

No Scale

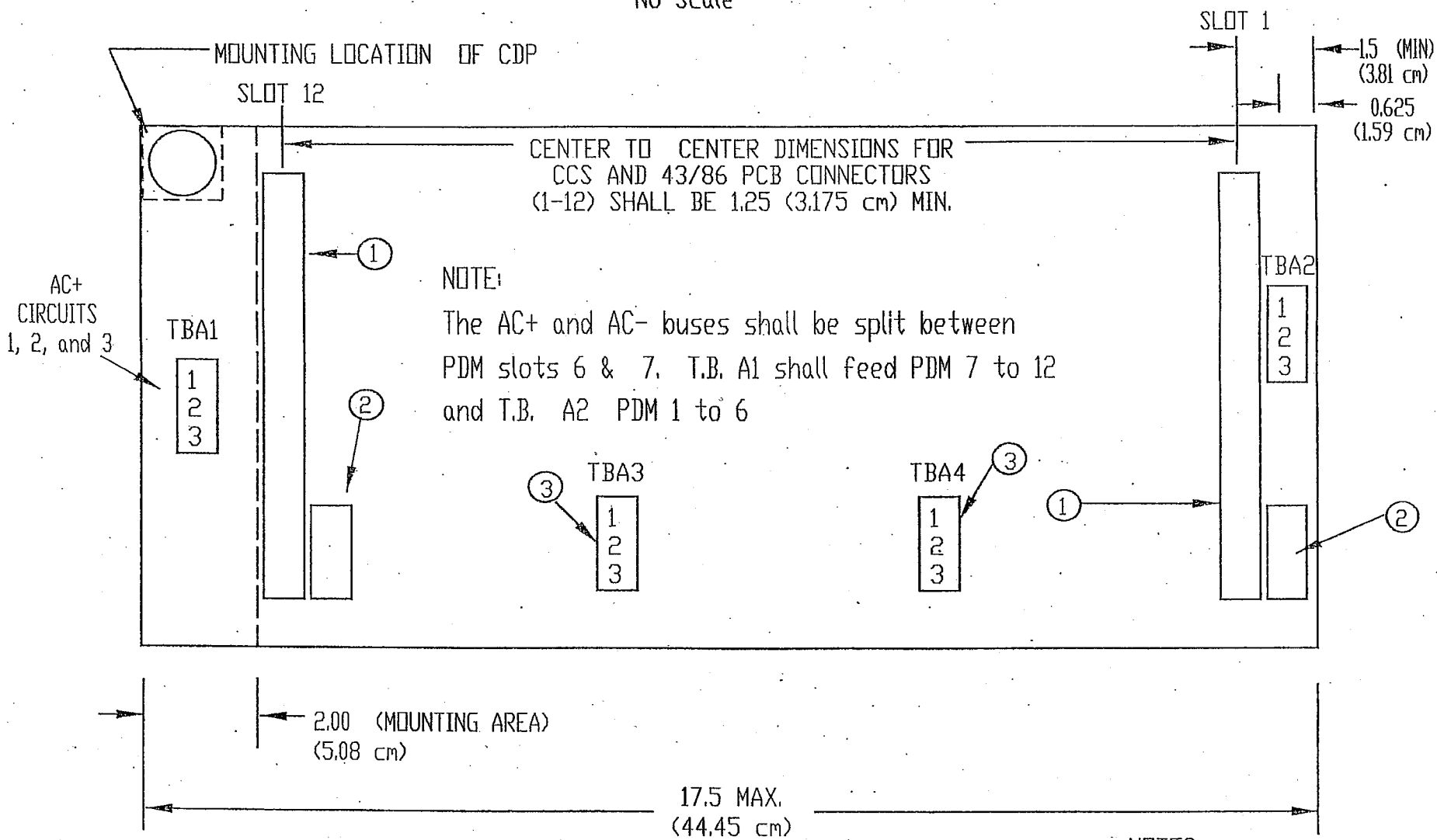

NOTES:

1. 43/86 PCB CONNEC
2. CCS CONNECTOR
3. AC- TB

PIXEL DRIVER MODULE

No Scale

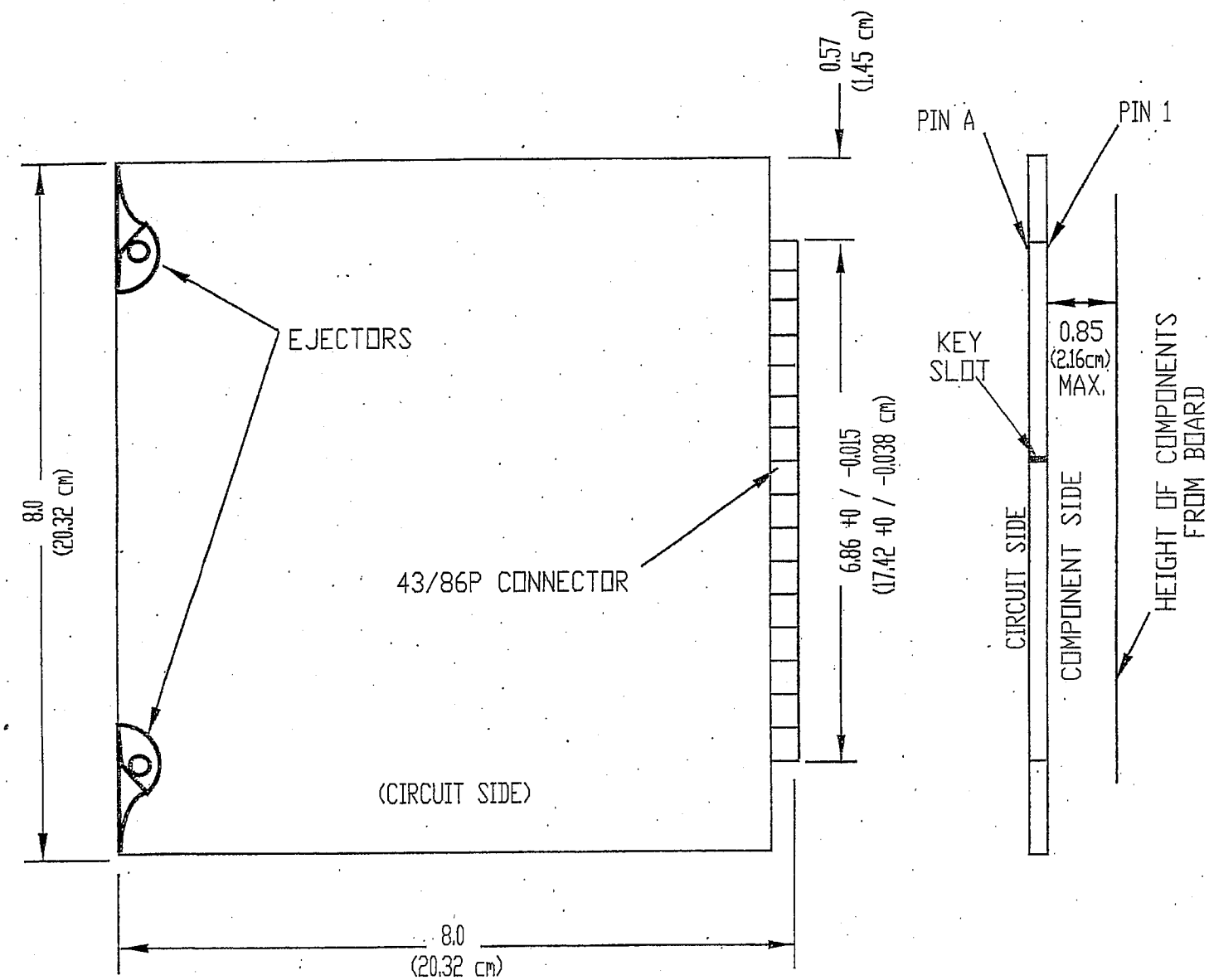

PLANE VIEW

CONNECTOR END VIEW

NOTE: PDM shall be keyed between pins 17 and 18.

No Scale

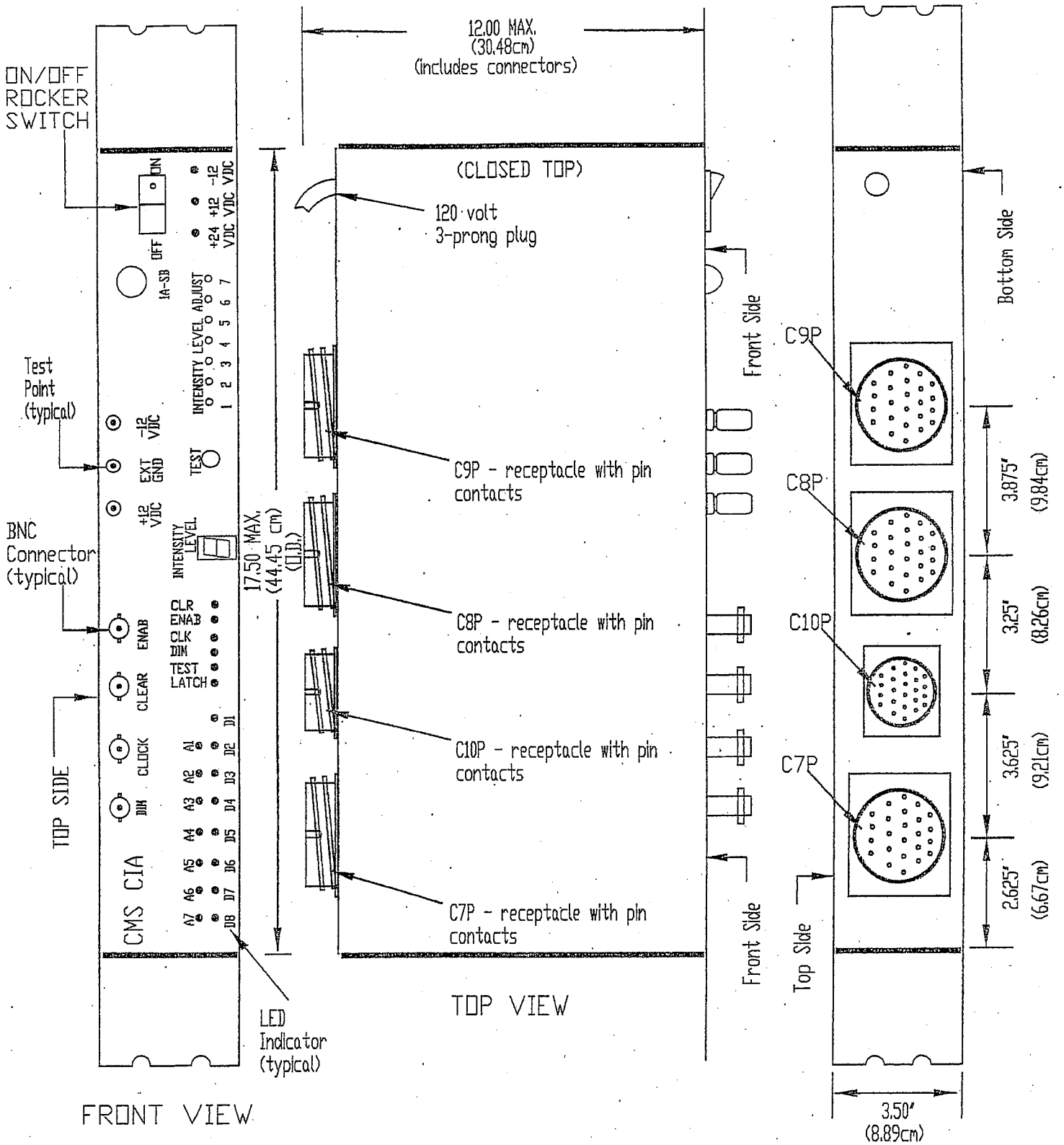

NOTES: The EXT GND, +12VDC and -12VDC test points shall be insulated binding posts.
Required vents on sides and bottom of assembly.

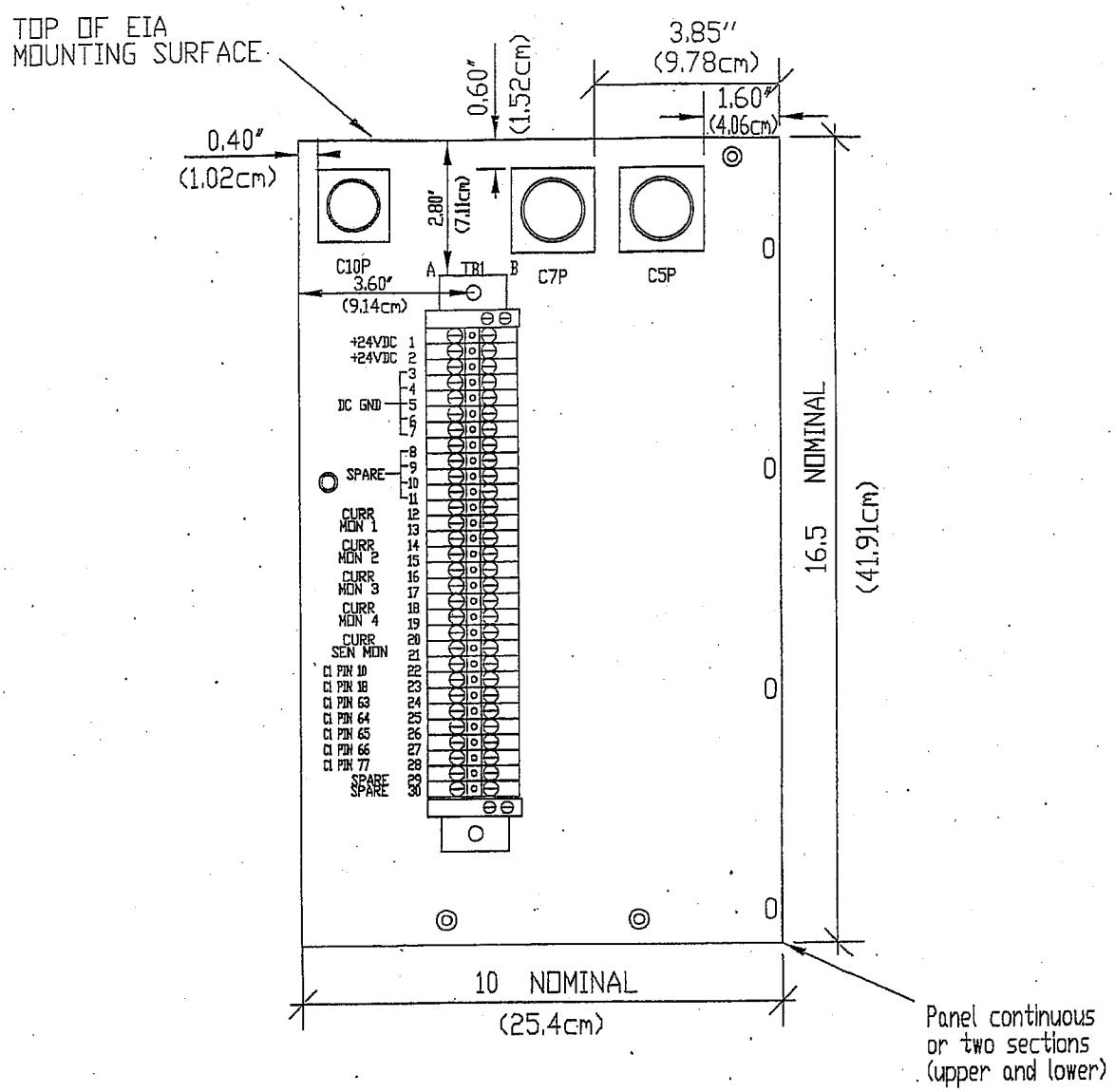

NOTES:

1. Provide and install a 30 position TB1 Terminal Block and three circular connectors, C5P, C7P and C10P (no contracts). TB1 shall be a USK 10 Open Construction Phoenix Contact Terminal Block (or equal) mounted on DIN Railing (supported every 6 inches (15.24cm)) with position function label tabs and positions commoned and end locks.

2. A 4 foot length 'CMS' Harness of 14 #20 (or larger) Conductors shall be furnished and installed in the cabinet. One end of the harness shall be the C10S Connector resting in C10P (mounted on the Input Panel #3) when not in use. The other end shall be stripped (according to manufacturers requirements) and connected to the 'B Side' of TB1. The conductor bundle shall have external protection.

Title: MODEL 334C CABINET, INPUT FILE NO. 3		
DETAIL - UPPER PART		
No Scale	FEBRUARY 2003	8-7-8

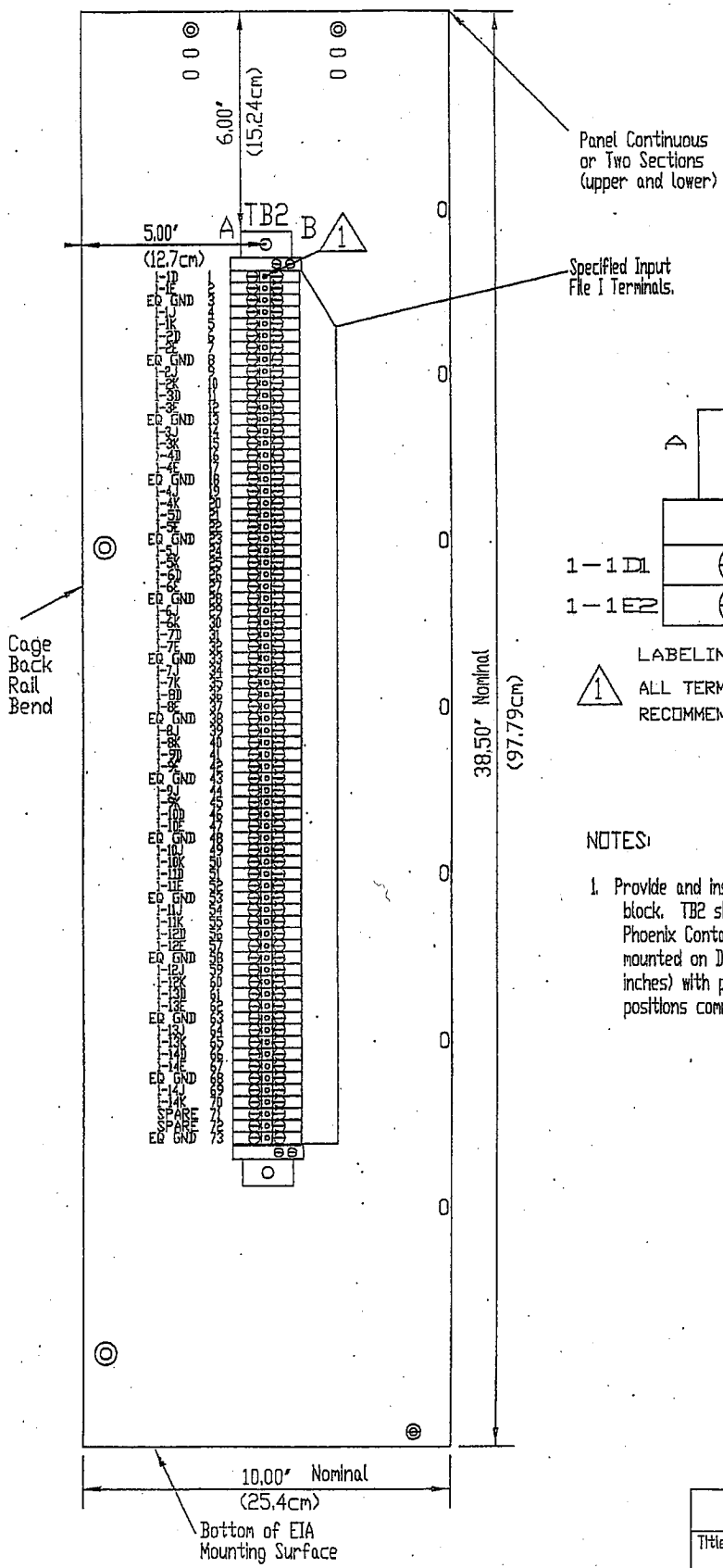

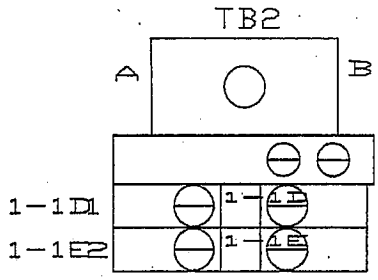

1 LABELING ON PANEL AND TERMINAL BLOCK.
ALL TERMINALS TO BE LABELED USING MANUFACTURER RECOMMENDED PLASTIC LABELS AS SHOWN ABOVE.

NOTES:

1. Provide and install a 73 position TB2 terminal block. TB2 shall be a USK 10 Open Construction Phoenix Contact Terminal Blocks (or equal) mounted on DIN Railing (supported every 6 inches) with position function label tabs and positions commoned and end locks.

Title: MODEL 334C CABINET, INPUT FILE NO. 3		
DETAIL - LOWER PART		
No Scale	FEBRUARY 2003	8-7-9

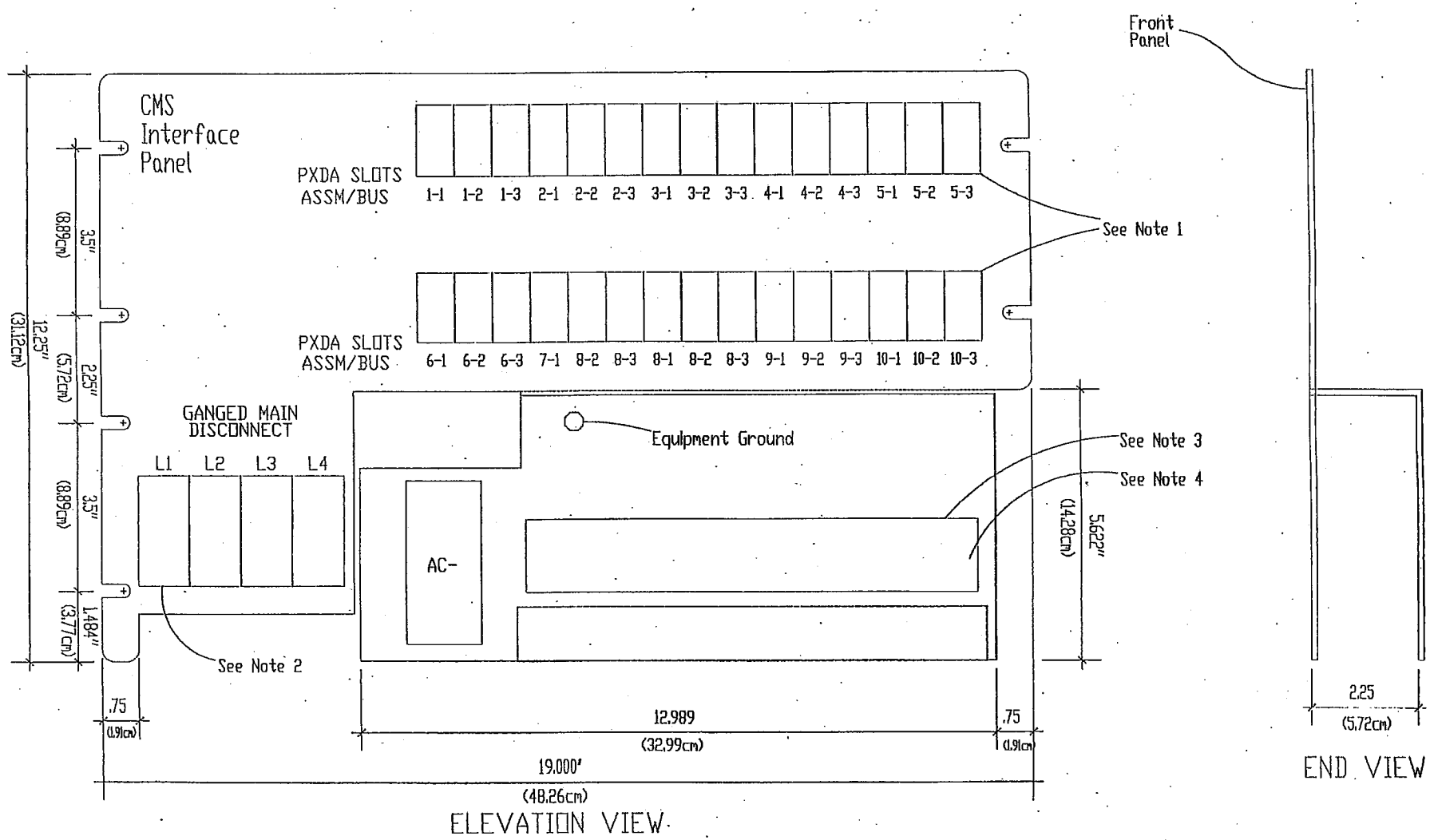

NOTES/KEY:

1. Total 30-20A Circuit Breakers
2. 4-50A Ganged Main Disconnect Switches
3. Opening for secondary side of CITB for Harness #3.
4. Opening for secondary side of AC- conductors.

MODEL 500/510 CMS SYSTEM		
CMS Interface Panel (Xenon)		
Front and Side Views		
No Scale	FEBRUARY 2003	8-7-10

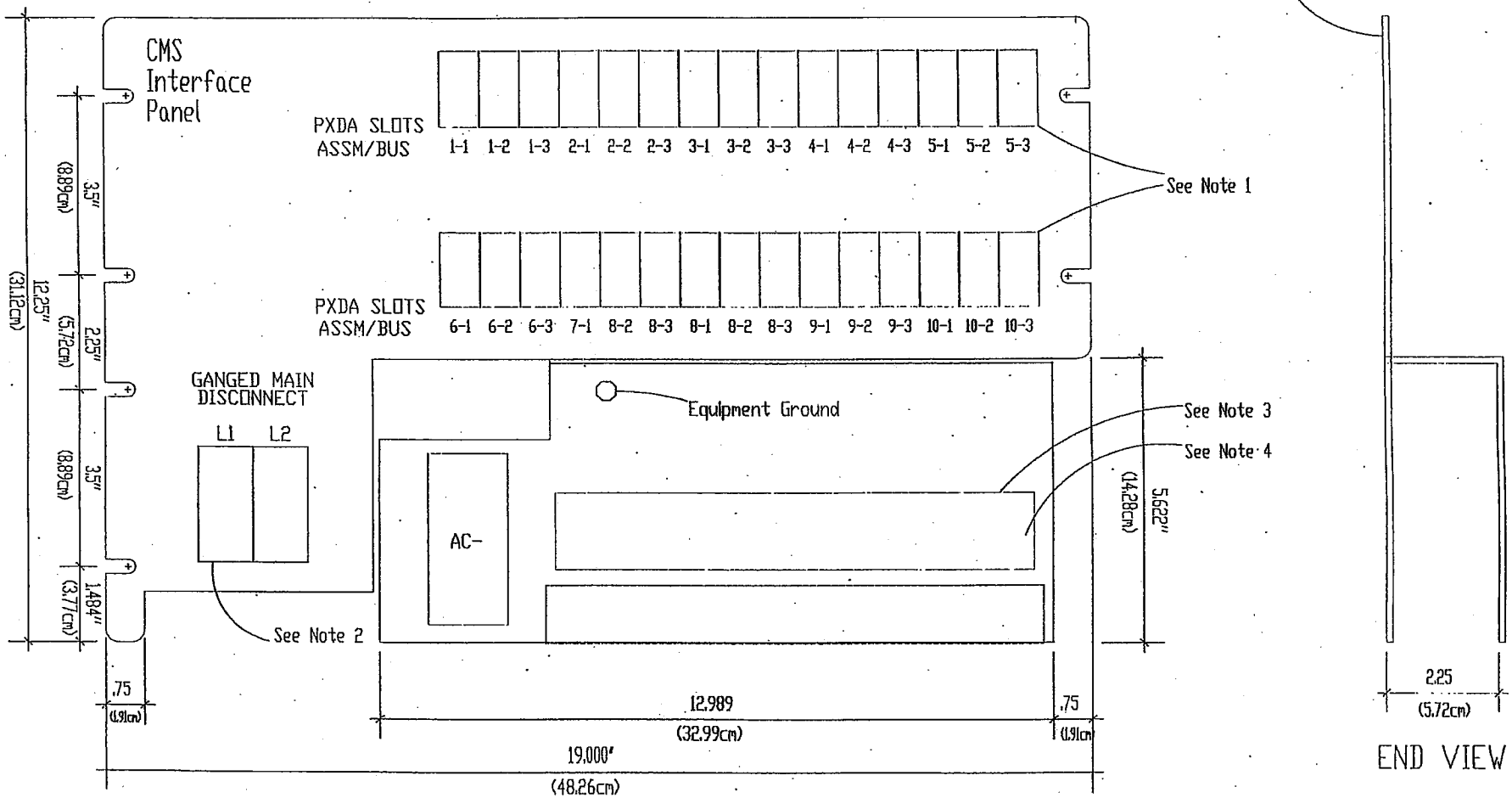

NOTES/KEY:

1. Total 30-20A Circuit Breakers
2. 2-30A Ganged Main Disconnect Switches
3. Opening for secondary side of CITB for Harness #3.
4. Opening for secondary side of AC- conductors.

MODEL 500/510 CMS SYSTEM		
CMS Interface Panel (LED)		
Front and Side Views		
No Scale	FEBRUARY 2003	8-7-11

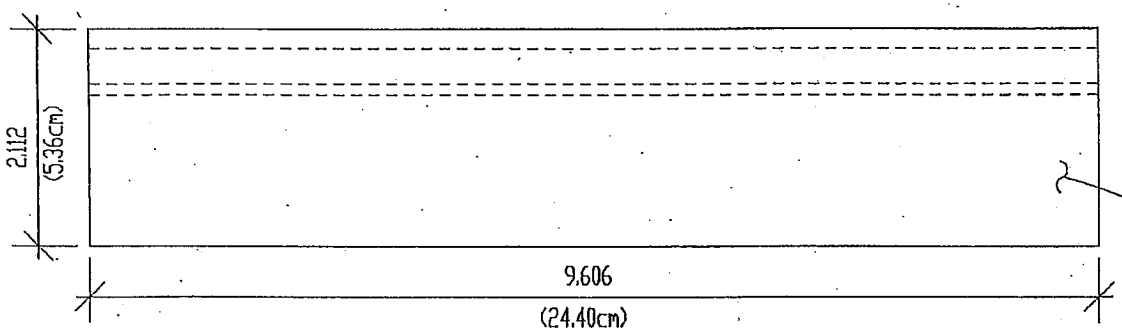

ELEVATION VIEW

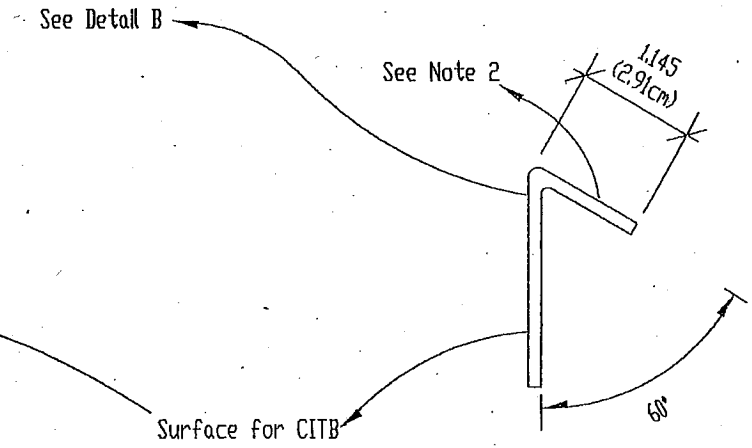

END VIEW

DETAIL A
DIN BRACKET

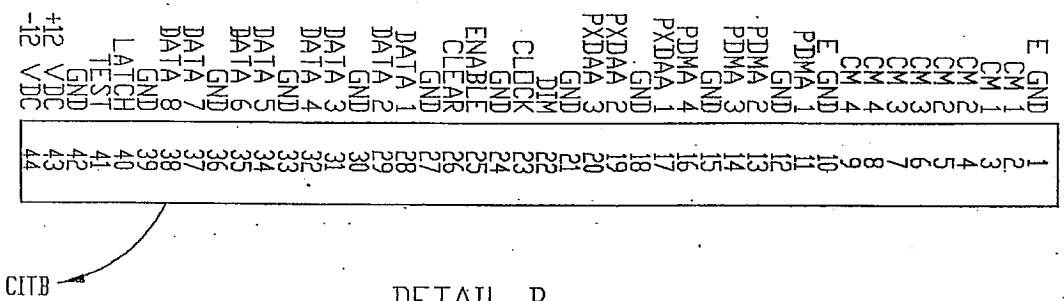

DETAIL B
DIN TERMINAL BLOCK AND LABELING

NOTES/KEY:

1. CITB- CMS Interface Terminal Block
2. This side of bracket to be mounted to CIP.

MODEL 500/510 or 520 CMS SYSTEM		
CMS Interface Panel Terminal Block		
CITB Bracket and Labeling		
No Scale	FEBRUARY 2003	8-7-12

PDA NO. 4

No Scale

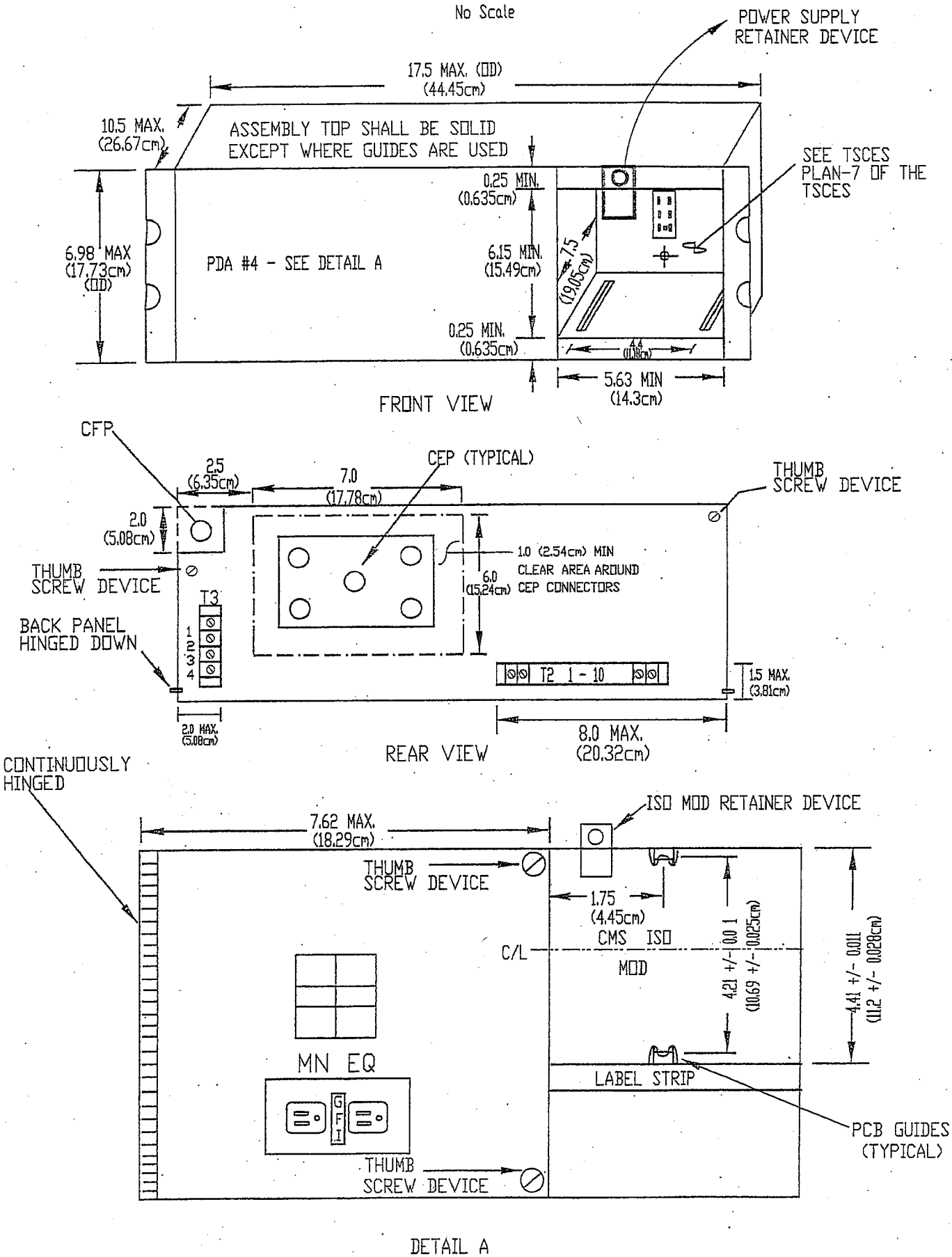

DETAIL A

CMS ISOLATION MODULE

No Scale

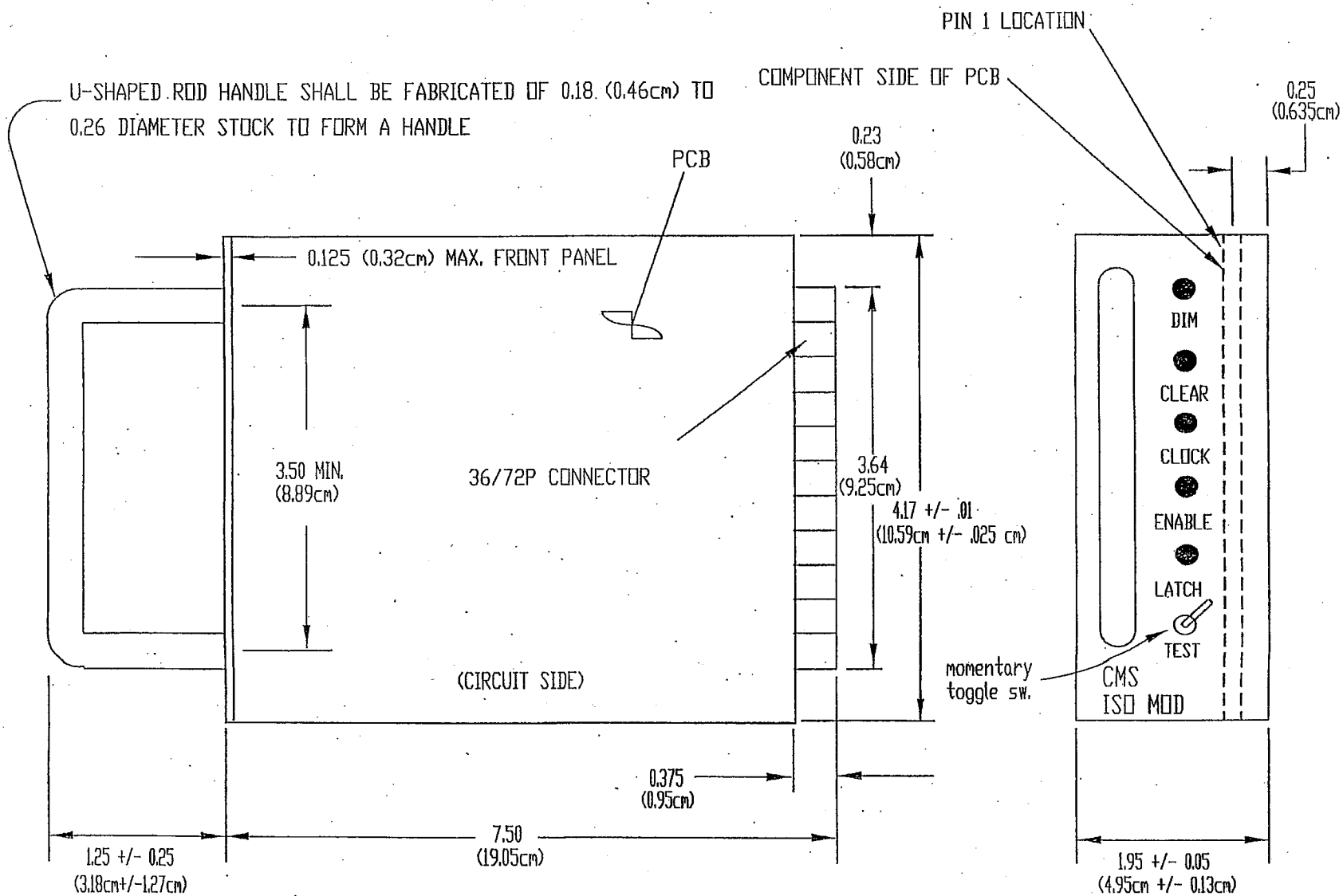

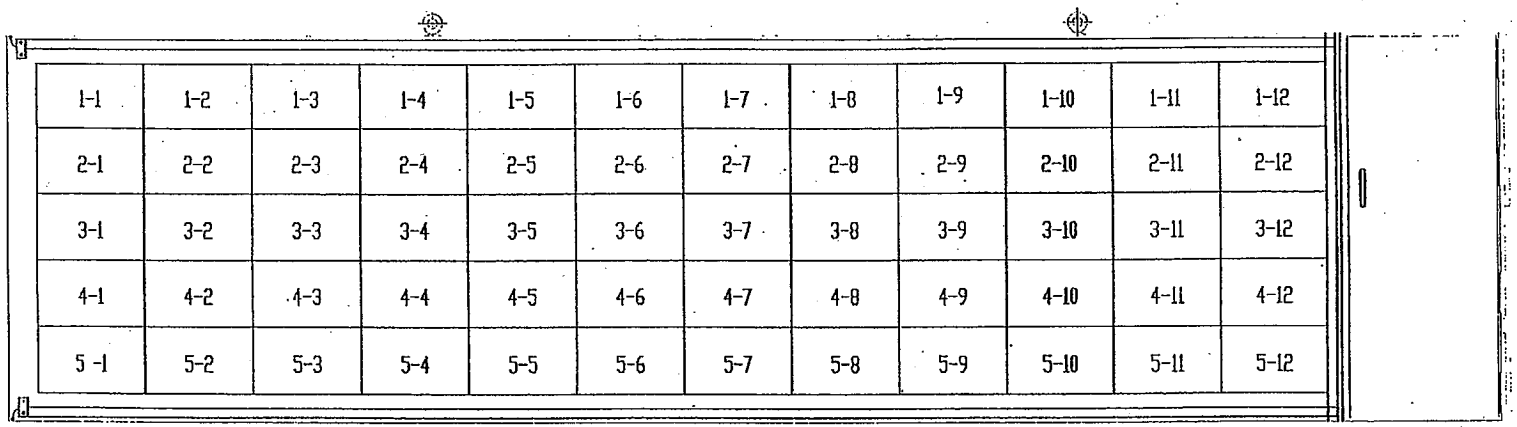

PIXEL MATRIX MODULE ADDRESS CONFIGURATION

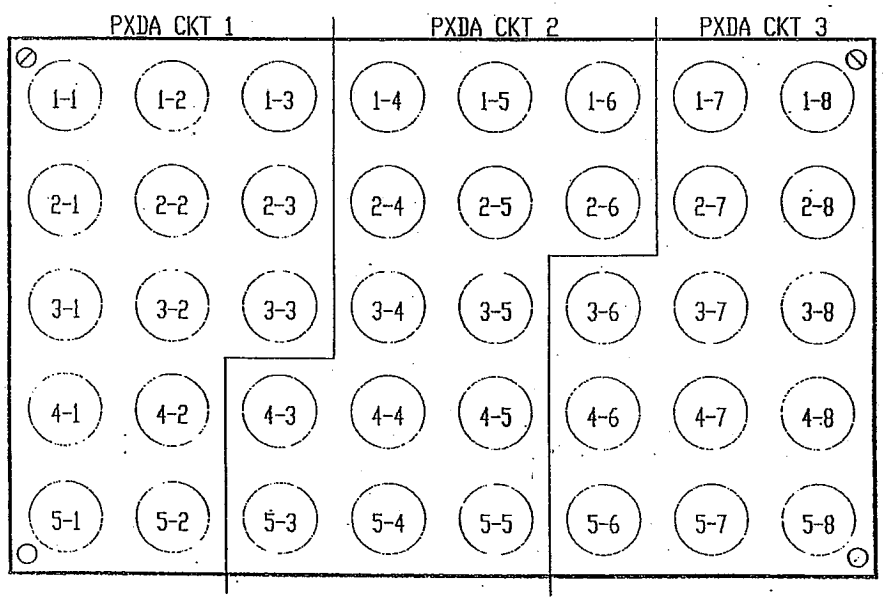

PIXEL MATRIX MODULE LAMP ASSIGNMENTS

NOTES/KEY:
PIXEL MATRIX MODULE ADDRESS CONFIGURATION
1. 2-4 - PXDA2-PDM4

PIXEL MATRIX MODULE PIXEL ASSIGNMENT
2. 4-7 - 4th byte of data, bit 7
3. Column 8 is the Least Significant Bit (LSB)
4. Column 1 is the Most Significant Bit (MSB)

MODEL 500/510 CMS SYSTEM		
Title: Address and Pixel Bit Configuration		
No Scale	FEBRUARY 2003	8-7-15

CMS DEVICE ADDRESS ASSIGNMENT

Device Designation	PXDA Address (3 bits)			LDM Slot Address (4 bits)			
	7	6	5	4	3	2	1
PXDA1 - PDM 1	0	0	1	0	0	0	1
PXDA1 - PDM 2	0	0	1	0	0	1	0
PXDA1 - PDM 3	0	0	1	0	0	1	1
PXDA1 - PDM 4	0	0	1	0	1	0	0
PXDA1 - PDM 5	0	0	1	0	1	0	1
PXDA1 - PDM 6	0	0	1	0	1	1	0
PXDA1 - PDM 7	0	0	1	0	1	1	1
PXDA1 - PDM 8	0	0	1	1	0	0	0
PXDA1 - PDM 9	0	0	1	1	0	0	1
PXDA1 - PDM 10	0	0	1	1	0	1	0
PXDA1 - PDM 11	0	0	1	1	0	1	1
PXDA1 - PDM 12	0	0	1	1	1	0	0
PXDA2 - PDM 1	0	1	0	0	0	0	1
PXDA2 - PDM 2	0	1	0	0	0	1	0
PXDA2 - PDM 3	0	1	0	0	0	1	1
PXDA2 - PDM 4	0	1	0	0	1	0	0
PXDA2 - PDM 5	0	1	0	0	1	0	1
PXDA2 - PDM 6	0	1	0	0	1	1	0
PXDA2 - PDM 7	0	1	0	0	1	1	1
PXDA2 - PDM 8	0	1	0	1	0	0	0
PXDA2 - PDM 9	0	1	0	1	0	0	1
PXDA2 - PDM 10	0	1	0	1	0	1	0
PXDA2 - PDM 11	0	1	0	1	0	1	1
PXDA2 - PDM 12	0	1	0	1	1	0	0
PXDA3 - PDM 1	0	1	1	0	0	0	1
PXDA3 - PDM 2	0	1	1	0	0	1	0
PXDA3 - PDM 3	0	1	1	0	0	1	1
PXDA3 - PDM 4	0	1	1	0	1	0	0
PXDA3 - PDM 5	0	1	1	0	1	0	1
PXDA3 - PDM 6	0	1	1	0	1	1	0
PXDA3 - PDM 7	0	1	1	0	1	1	1
PXDA3 - PDM 8	0	1	1	1	0	0	0
PXDA3 - PDM 9	0	1	1	1	0	0	1
PXDA3 - PDM 10	0	1	1	1	0	1	0
PXDA3 - PDM 11	0	1	1	1	0	1	1
PXDA3 - PDM 12	0	1	1	1	1	0	0
PXDA4 - PDM 1	1	0	0	0	0	0	1
PXDA4 - PDM 2	1	0	0	0	0	1	0
PXDA4 - PDM 3	1	0	0	0	0	1	1
PXDA4 - PDM 4	1	0	0	0	1	0	0
PXDA4 - PDM 5	1	0	0	0	1	0	1
PXDA4 - PDM 6	1	0	0	0	1	1	0
PXDA4 - PDM 7	1	0	0	0	1	1	1
PXDA4 - PDM 8	1	0	0	1	0	0	0
PXDA4 - PDM 9	1	0	0	1	0	0	1
PXDA4 - PDM 10	1	0	0	1	0	1	0
PXDA4 - PDM 11	1	0	0	1	0	1	1
PXDA4 - PDM 12	1	0	0	1	1	0	0
PXDA5 - PDM 1	1	0	1	0	0	0	1
PXDA5 - PDM 2	1	0	1	0	0	1	0
PXDA5 - PDM 3	1	0	1	0	0	1	1
PXDA5 - PDM 4	1	0	1	0	1	0	0
PXDA5 - PDM 5	1	0	1	0	1	0	1
PXDA5 - PDM 6	1	0	1	0	1	1	0
PXDA5 - PDM 7	1	0	1	0	1	1	1
PXDA5 - PDM 8	1	0	1	1	0	0	0
PXDA5 - PDM 9	1	0	1	1	0	0	1
PXDA5 - PDM 10	1	0	1	1	0	1	0
PXDA5 - PDM 11	1	0	1	1	0	1	1
PXDA5 - PDM 12	1	0	1	1	1	0	0

CMS TIMING DIAGRAM

No Scale

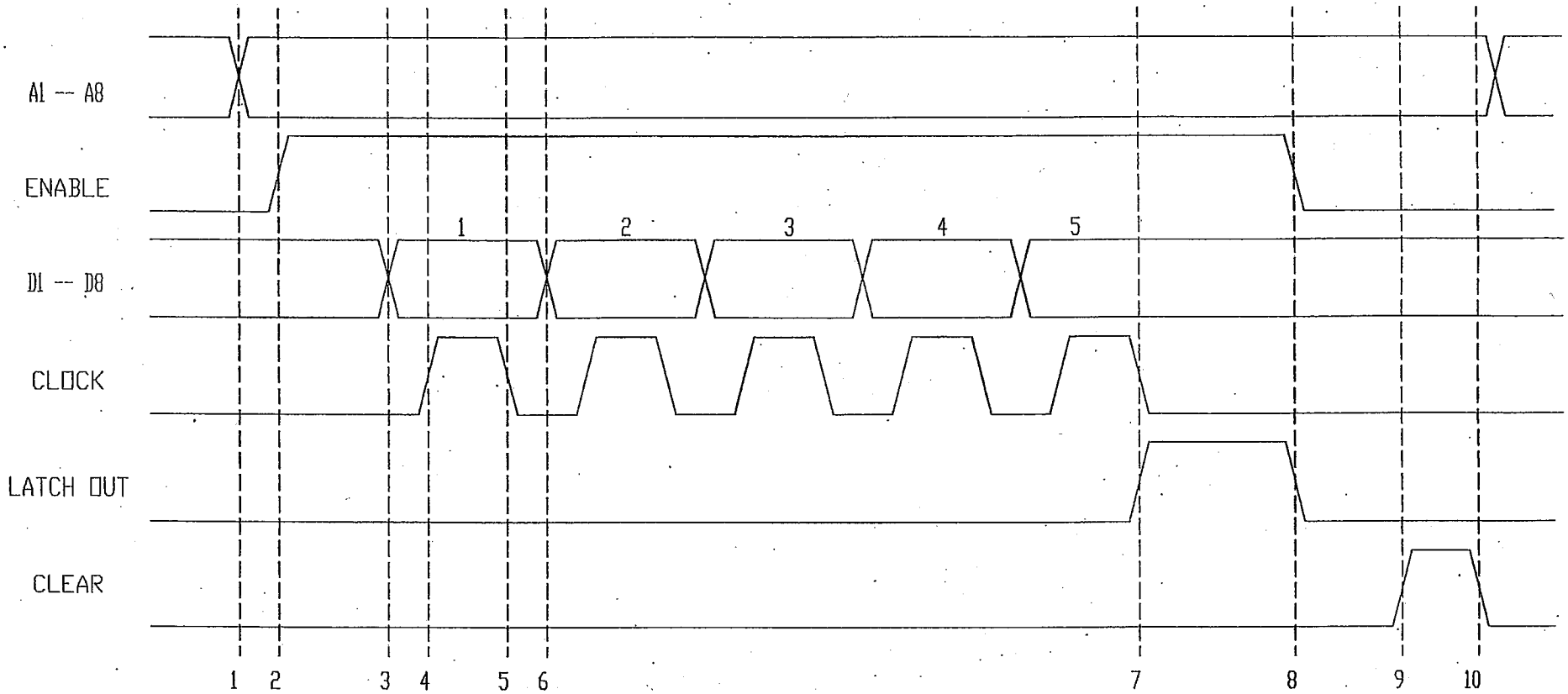

NOTE: Logic is Ground True. For this detail, up is True(1) and down is False(0).
Rise and Fall timer shall stablize within 10μ seconds.

SEQUENCE OF OPERATION

1. Place Address on Address Lines.
2. Set the Enable Line to True.
3. Begin Data transfer loop, place Data on Data Lines. First word/Fifth row onto Fifth word/First row of Pixels.
4. Set the Clock Line to True. The leading edge will shift data in shift register.
5. Set the Clock Line to False.
6. Place the next Data on the Data Lines and loop until all 5 bytes of data are transferred.
7. The trailing edge of the Clock Line will cause the Latch Line to go True.
8. Set the Enable Line to False. The Latch Line will go False.
9. Set the Clear Line to True. This will turn off Pixel Load Triacs and transfer data from shift registers to output latches.
10. Set the Clear Line to False. This enables Pixel Load Triacs with new message.

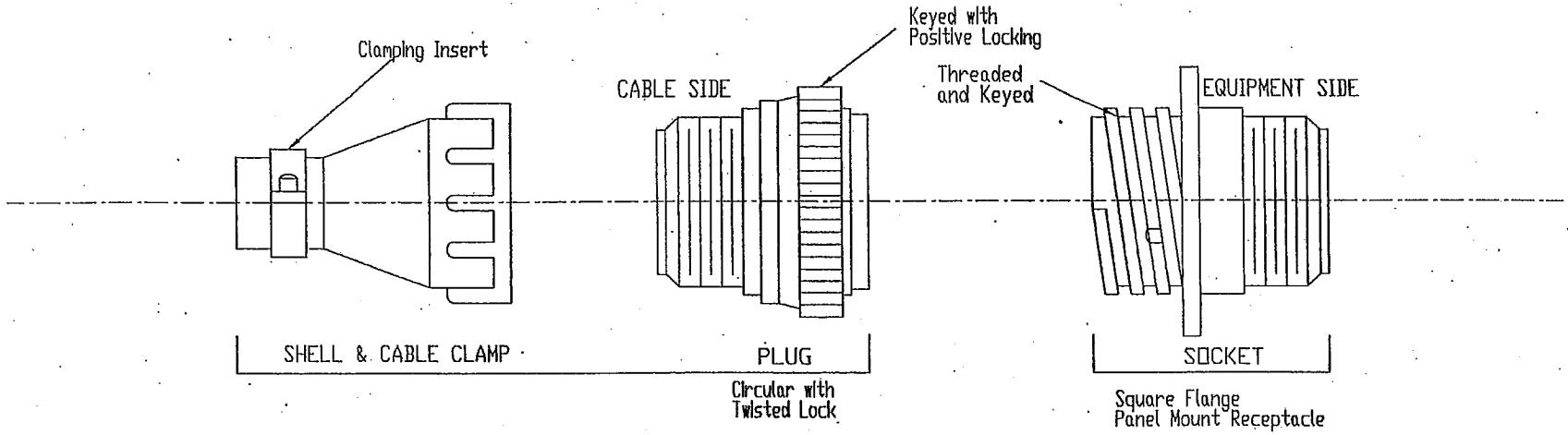

CONNECTORS CA, CB, CD, CE, CF, C7, C8, C9, & C10

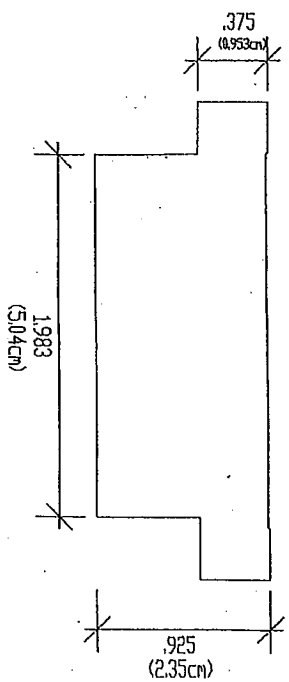

CONNECTOR CC

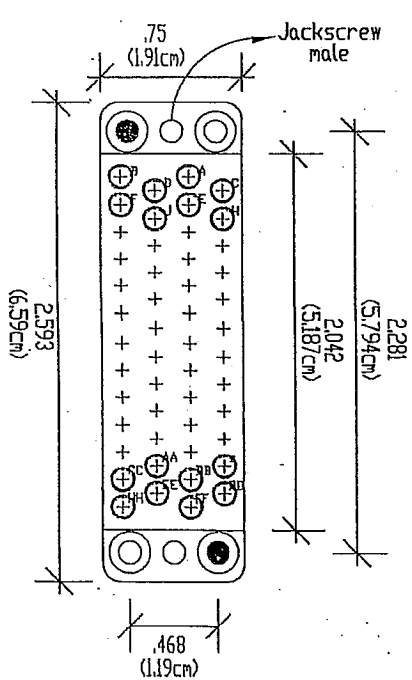

CCP

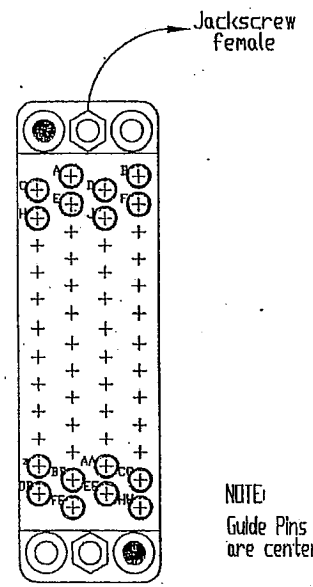

CCS

NOTE:
Guide Pins & Sockets, and Jackscrews are centered symetrical to connector.

KEY:
○ - socket
● - pin (male)

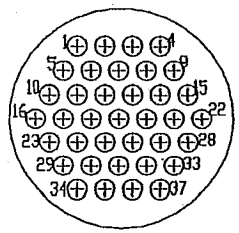

CA, CB, CD, CE, CF, C7, C8 & C9

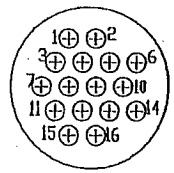

C10

CONNECTOR PIN ARRANGEMENT

MODEL 500/510 or 520 CMS SYSTEM		
Title: Connector Detail		
No Scale	FEBRUARY 2003	8-7-18

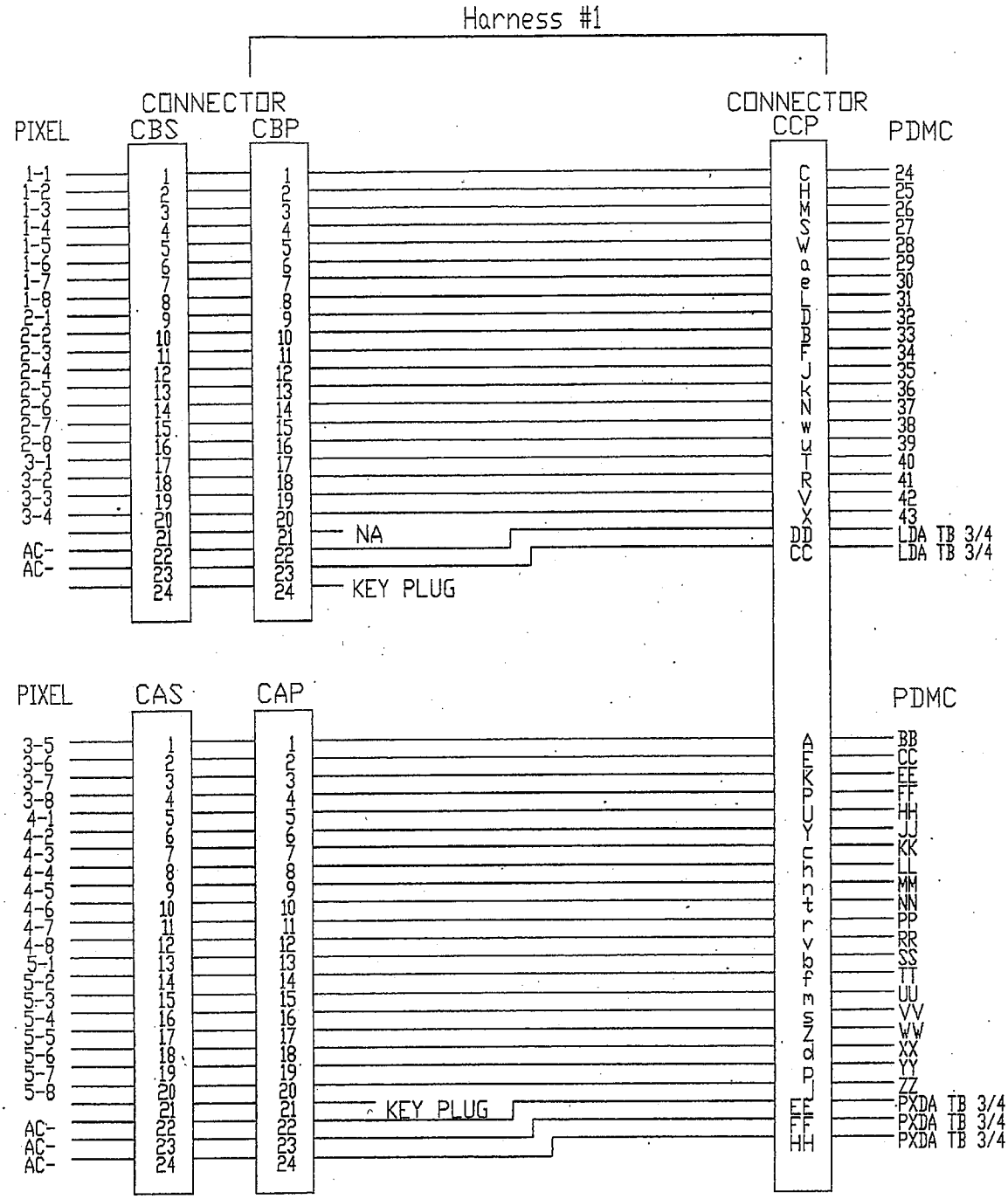

NOTES/KEY:

Diagram is for interconnection between Pixel Matrix Module and Pixel Driver Assembly.
Pins x,y,z and AA are Not Assigned on CC connector.

PDMC 24 - Pixel Driver Module Connector pin 24
PXDA TB 3 - Pixel Driver Assembly Terminal Block position 3
NA - Not Assigned

MODEL 500/510 or 520 CMS SYSTEM		
Title: Harness #1 Wiring Diagram		
CAP/CBP to CCP Pin Assignments		
No Scale	FEBRUARY 2003	8-7-19

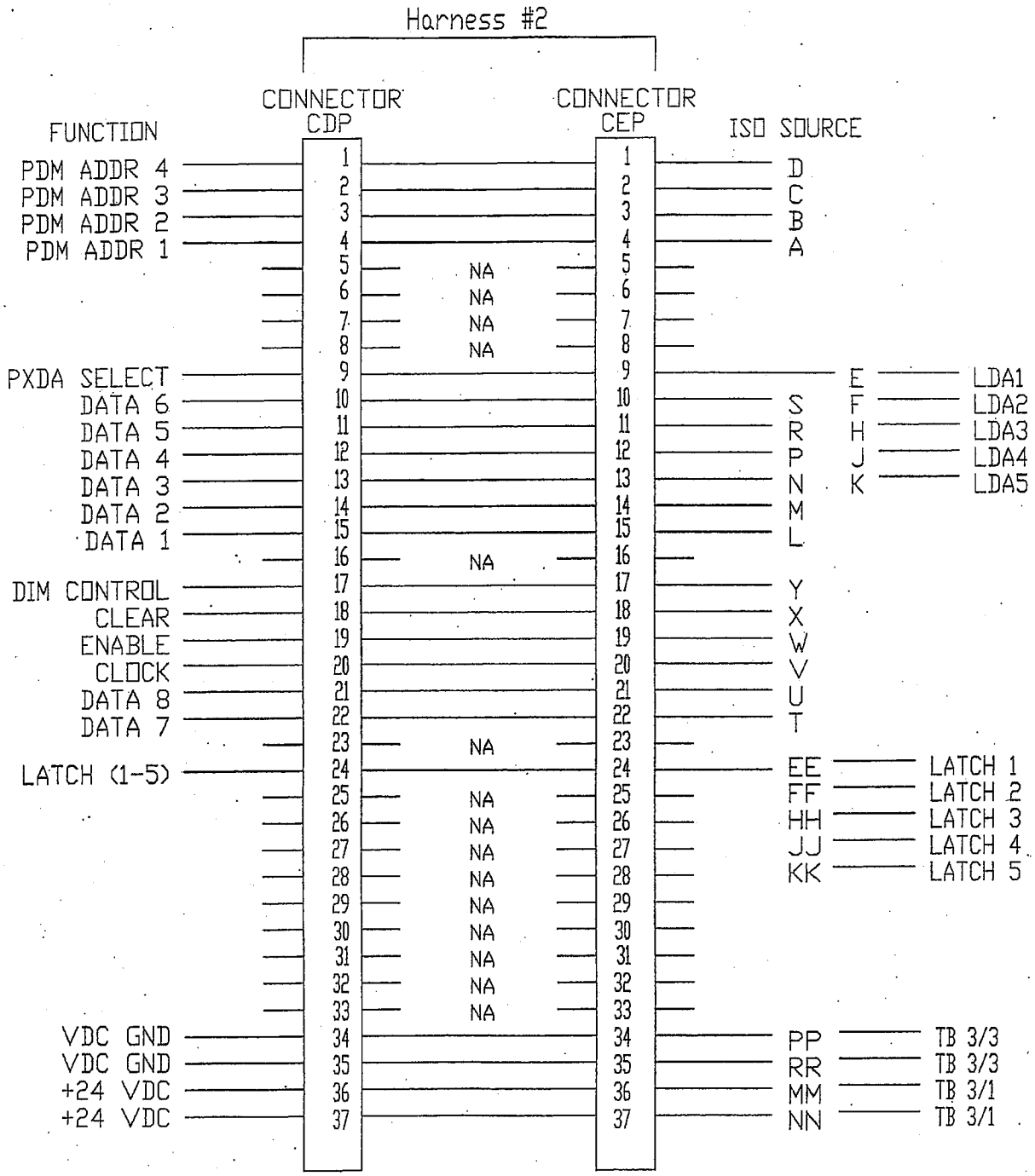

NOTES/KEY:

Diagram is for interconnection between Pixel Driver Assembly and PDA #3
ISO-54, LATCH 1 pertains to PXDA 1; ISO-56, LATCH 2 pertains to PXDA 2, etc.

ISO SOURCE-60 - Isolation Module Connector pin 60
PXDA TB 3 - Pixel Driver Assembly Terminal Block position 3
NA - Not Assigned

MODEL 500/510 or 520 CMS SYSTEM		
Title: Harness #2 Wiring Diagram		
CDP to CEP Pin Assignments		
No Scale	FEBRUARY 2003	8-7-20

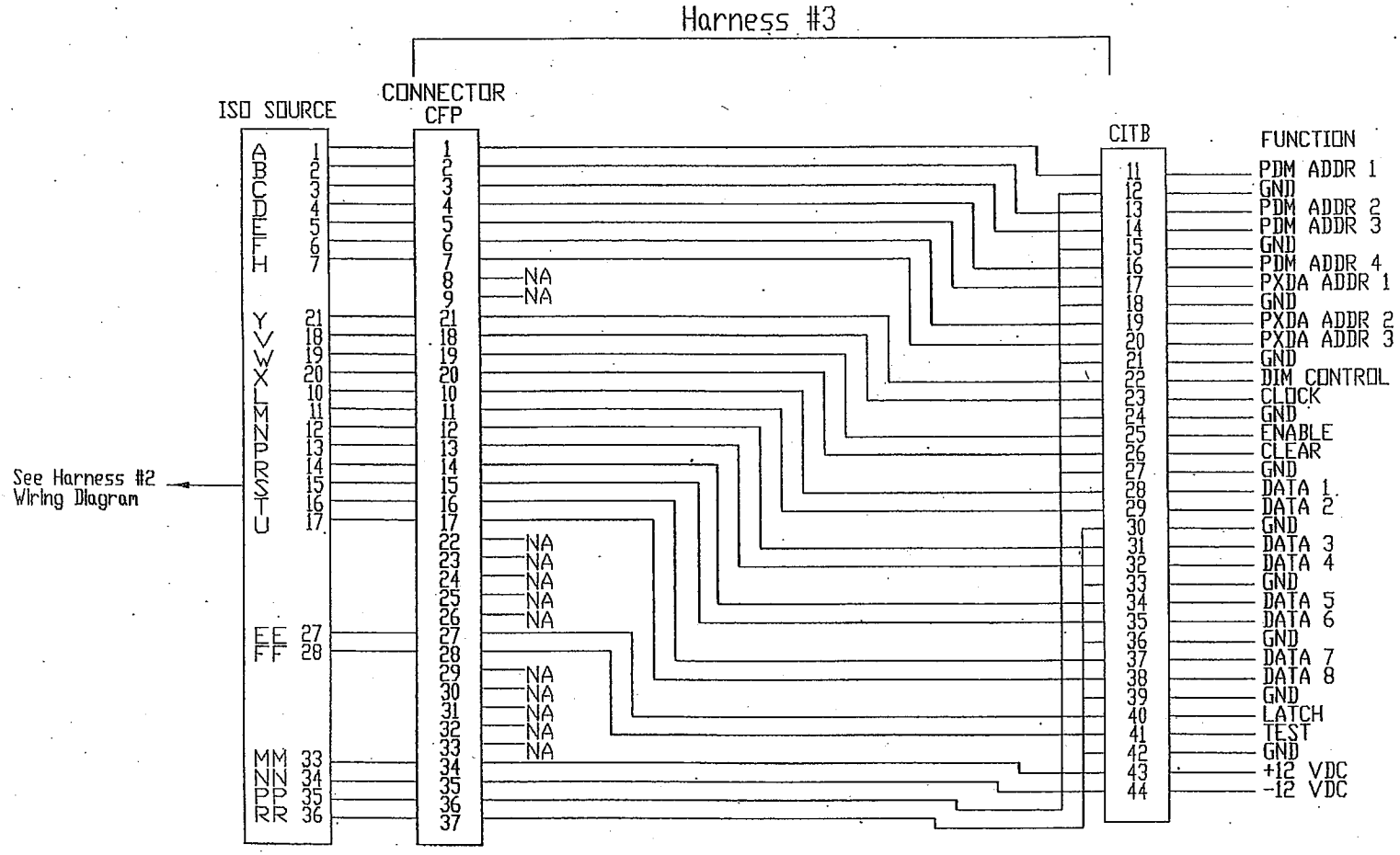

NOTES/KEY:

Diagram is for interconnection between PDA #3 to secondary side of CITB on the CIP. Harness #3 connection ends on secondary side of CITB shall be stripped and connected to manufacturer specifications.

ISO SOURCE-35 - Isolation Module Connector pin 35
CITB - CMS Interface Terminal Block
NA - Not Assigned

MODEL 500/510 or 520 CMS SYSTEM		
Title: Harness #3 Wiring Diagram		
CFP to CITB Pin Assignments		
No Scale	FEBRUARY 2003	8-7-21

CMS HARNESS NO. 4 AND 5 WIRING LISTS

CONTROLLER INTERFACE PANEL TERMINAL BLOCK (CITB) — CAB/CIA CONNECTORS

HARNESS NO. 4

TERMINAL BLOCK	POSITION	FUNCTION	CONNECTOR	PIN
CITB	11	PDM Addr 1	C8	1
CITB	13	PDM Addr 2	C8	3
CITB	14	PDM Addr 3	C8	5
CITB	16	PDM Addr 4	C8	7
CITB	17	PXDA Addr 1	C8	9
CITB	19	PXDA Addr 2	C8	11
CITB	20	PXDA Addr 3	C8	13
CITB	22	DIM CONTROL	C9	7
CITB	23	CLOCK	C9	1
CITB	25	ENABLE	C9	3
CITB	26	CLEAR	C9	5
CITB	12,15,18,21,24,27	EXT VDC GND	C8	*
CITB	28	DATA 1	C8	19
CITB	29	DATA 2	C8	21
CITB	31	DATA 3	C8	23
CITB	32	DATA 4	C8	25
CITB	34	DATA 5	C8	27
CITB	35	DATA 6	C8	29
CITB	37	DATA 7	C8	31
CITB	38	DATA 8	C8	33
CITB	40	LATCH LINE	C9	13
CITB	41	TEST	C9	15
CITB	43	EXT +12 VDC	C9	34
CITB	44	EXT -12 VDC	C9	35
CITB	30,33,36,39,42	EXT VDC GND	C8 & 9	*

HARNESS NO. 5

TERMINAL BLOCK	POSITION	FUNCTION	CONNECTOR-PIN
CITB	1 & 10	EQUIP. GROUND	
CITB	2 & 3	CURRENT MONITOR 1	TB1A-12&13/C10-1&2
CITB	4 & 5	CURRENT MONITOR 2	TB1A-14&15/C10-3&4
CITB	6 & 7	CURRENT MONITOR 3	TB1A-16&17/C10-5&6
CITB	8 & 9	CURRENT MONITOR 4	TB1A-18&19/C10-7&8

* VDC LOGIC GND WIRES, (refer to page 8-7-28).

DEFINITIONS:
PDM Addr 1 - Lamp Driver Module Address Line 1.
PXDA Addr 1 - Lamp Driver Assembly Address Line 1.

CMS HARNESS #4
COLOR CODED WIRING LIST

FUNCTION	CIP/CITB POSITION	COLOR PAIRS (gnd w/logic)	CONNECTOR-PINS (logic, gnd)
PDM Addr 1	11	BLACK W/RED	C8-1,2
PDM Addr 2	13	BLACK W/WHITE	C8-3,4
PDM Addr 3	14	BLACK W/GREEN	C8-5,6
PDM Addr 4	16	BLACK W/BLUE	C8-7,8
PXDA Addr 1	17	BLACK W/YELLOW	C8-9,10
PXDA Addr 2	19	BLACK W/BROWN	C8-11,12
PXDA Addr 3	20	BLACK W/ORANGE	C8-13,14
DIM CONTROL	22	RED W/WHITE	C9-7,8
CLOCK	23	RED W GREEN	C9-1,2
ENABLE	25	RED W/BLUE	C9-3,4
CLEAR	26	RED W/YELLOW	C9-5,6
DATA 1	28	RED W/BROWN	C8-19,20
DATA 2	29	RED W/ORANGE	C8-21,22
DATA 3	31	GREEN W/WHITE	C8-23,24
DATA 4	32	GREEN W/BLUE	C8-25,26
DATA 5	34	GREEN W/YELLOW	C8-27,28
DATA 6	35	GREEN W/BROWN	C8-29,30
DATA 7	37	GREEN W/ORANGE	C8-31,32
DATA 8	38	WHITE W/BLUE	C8-33,34
LATCH LINE	40	WHITE W/YELLOW	C9-13,14
TEST	41	WHITE W/BROWN	C9-15,16
EXT +12 VDC	43	WHITE W/ORANGE	C9-34,36
EXT -12 VDC	44	BLUE W/YELLOW	C9-35,37

*CIP/CITB VDC LOGIC GND POSITIONS: 12, 15, 18, 21, 24, 27, 30, 33, 36, 39, 42

CMS HARNESS # 5
COLOR CODED WIRING LIST

FUNCTION	CIP/CITB POSITION	COLOR PAIRS	CONNECTOR (TB1A-C10)
CURR. MONITOR 1	2 & 3	BLACK W/RED	12&13-1&2
CURR. MONITOR 2	4 & 5	BLACK W/WHITE	14&15-3&4
CURR. MONITOR 3	6 & 7	BLACK W/GREEN	16&17-5&6
CURR. MONITOR 4	8 & 9	BLACK W/BLUE	18&19-7&8

DEFINITIONS:
TB1A-Terminal Block 1A in 334C cabinet.
TB1A-C10: terminal block 1A position 1&2 connected to C10 connector pins 1&2.

MODEL 334C CONTROLLER CABINET
HARNESS NO. 5 AND TB1 WIRING LIST

CABINET TB1A TERMINAL BLOCK

POSITION	SIDE A	SIDE B	C10 CONNECTOR
1	+24 VDC (PDA 3)	I/O FILES	
2	+24 VDC (POS. 1)	CAB. HARNESS #5	PINS 13 & 14
3 - 7	DC GND (PDA 3)	C1 PINS 1 & 104, I/O FILES & CAB. HARNESS #5	PINS 15 & 16
8 - 11	NA	NA	
12 & 13	CURR. MONITOR 1*	CAB. HARNESS #5	PINS 1 & 2
14 & 15	CURR. MONITOR 2*	CAB. HARNESS #5	PINS 3 & 4
16 & 17	CURR. MONITOR 3*	CAB. HARNESS #5	PINS 5 & 6
18 & 19	CURR. MONITOR 4*	CAB. HARNESS #5	PINS 7 & 8
20 & 21	PHOTO SEN. MON.	CAB. HARNESS #5	PINS 9 & 10
22	C1 PIN 10	CIA CONTROL 4	PIN 11
23	C1 PIN 18	NA	
24	C1 PIN 63	NA	
25	C1 PIN 64	NA	
26	C1 PIN 65	POL. CONTROL SWITCH	
27	C1 PIN 66	POL. LIGHTS SWITCH	
28	C1 PIN 76	NA	
29	C1 PIN 77	NA	
30	NA	NA	

* Refers to CMS HARNESS #5.

NOTES: All C1 PINS refer to C1 HARNESS #2.

MODEL 334C CABINET - C1 HARNESS NO. 2 WIRING LIST
(Interconnection between CABINET and CONTROLLER)

PIN	SOURCE	DESTINATION	FUNCTION	PIN	SOURCE	DESTINATION	FUNCTION
1	DC GND	TB1/3-7	DC GND BUS	53	I2-7	IFI-11F	RATE CODE 2
2	O1-1	C6-1	SWPK 1-RED	54	I2-8	IFI-11W	RATE CODE 1
3	O1-2	C6-2	SWPK 1-GRN	55	I3-1	IFI-4F	MAIN 9
4	O1-3	C6-3	SWPK 2-RED	56	I3-2	IFI-4W	MAIN 10
5	O1-4	C6-4	SWPK 2-YEL	57	I3-3	IFI-6F	MAIN 3
6	O1-5	C6-5	SWPK 2-GRN	58	I3-4	IFI-6W	MAIN 4
7	O1-6	C6-6	SWPK 3-RED	59	I3-5	IFI-7F	MAIN 5
8	O1-7	C6-7	SWPK 3-YEL	60	I3-6	IFI-7W	MAIN 6
9	O1-8	C6-8	SWPK 3-GRN	61	I3-7	IFI-8F	MAIN 11
10	O2-1	TB1/22	CIA CONTROL 4	62	I3-8	IFI-8W	MAIN 12
11	O2-2	C7-25	CMS CLOCK	63	I4-5	TB1/24	MAIN 17
12	O2-3	C7-26	CMS ENABLE	64	I4-6	TB1/25	MAIN 18
13	O2-4	C7-27	CMS CLEAR	65	I4-7	TB1/26	POL CONT'L SW
14	DC GND	IFI-15-4	INPUT DC GND	66	I4-8	TB1/27	POL LIGHTS SW
15	O2-5	C7-28	CMS DIM LEVEL 1	67	I5-1	C7-16	CIA SENSE 1
16	O2-6	C7-29	CMS DIM LEVEL 2	68	I5-2	C7-31	CIA SENSE 2
17	O2-7	C7-30	CMS DIM LEVEL 3	69	I5-3	C7-32	CIA SENSE 3
18	O2-8	TB1/23	--	70	I5-4	C7-33	CIA SENSE 4
19	O3-1	C7-9	CMS ADDRESS 1	71	I5-5	C7-34	CIA SENSE 5
20	O3-2	C7-10	CMS ADDRESS 2	72	I5-6	C7-35	CIA SENSE 6
21	O3-3	C7-11	CMS ADDRESS 3	73	I5-7	C7-36	CIA SENSE 7
22	O3-4	C7-12	CMS ADDRESS 4	74	I5-8	C7-37	CIA SENSE 8
23	O3-5	C7-13	CMS ADDRESS 5	75	I6-1	C7-5	CMS LATCH
24	O3-6	C7-14	CMS ADDRESS 6	76	I6-2	C7-6	PHASE FIRE
25	O3-7	C7-15	CMS ADDRESS 7	77	I6-3	TB1/29	MAIN 19
26	O3-8	C7-4	CIA CONTROL 5	78	I6-4	C7-8	CMS TEST REQ.
27	O4-1	C7-17	CMS DATA 1	79	I6-5	IFI-10F	MAIN 15
28	O4-2	C7-18	CMS DATA 2	80	I6-6	IFI-9W	MAIN 14
29	O4-3	C7-19	CMS DATA 3	81	I6-7	IFI-9F	MAIN 13
30	O4-4	C7-20	CMS DATA 4	82	I6-8	IFI-10W	MAIN 16
31	O4-5	C7-21	CMS DATA 5	83	O6-1	C5-1	SWPK 14-RED
32	O4-6	C7-22	CMS DATA 6	84	O6-2	C5-2	SWPK 14-GRN
33	O4-7	C7-23	CMS DATA 7	85	O6-3	C5-3	SWPK 13-RED
34	O4-8	C7-24	CMS DATA 8	86	O6-4	C5-4	SWPK 13-YEL
35	O5-1	C7-1	CIA CONTROL 1	87	O6-5	C5-5	SWPK 13-GRN
36	O5-2	C7-2	CIA CONTROL 2	88	O6-6	C5-6	SWPK 12-RED
37	O5-3	C6-9	SWPK 1-YEL	89	O6-7	C5-7	SWPK 12-YEL
38	O5-4	C7-3	CIA CONTROL 3	90	O6-8	C5-8	SWPK 12-GRN
39	I1-1	IFI-1W	PASSAGE 1	91	O7-1	C5-9	SWPK 11-RED
40	I1-2	IFI-12W	PASSAGE 2	92	DC GND	TB1/3-7	--
41	I1-3	IFI-12F	DEMAND 2	93	O7-2	C5-10	SWPK 11-GRN
42	I1-4	IFI-13W	OFF RAMP 2	94	O7-3	C5-11	SWPK 10-RED
43	I1-5	IFI-13F	QUE 2	95	O7-4	C5-12	SWPK 10-YEL
44	I1-6	IFI-14W	PASSAGE 3	96	O7-5	C4-13	SWPK 10-GRN
45	I1-7	IFI-14F	DEMAND 3	97	O7-6	C5-14	SWPK 9-RED
46	I1-8	IFI-1F	DEMAND 1	98	O7-7	C5-15	SWPK 9-YEL
47	I2-1	IFI-2W	OFF RAMP 1	99	O7-8	C5-16	SWPK 9-GRN
48	I2-2	IFI-3W	MAIN 7	100	O5-5	C5-17	SWPK 14-YEL
49	I2-3	IFI-3F	MAIN 8	101	O5-6	C5-18	SWPK 11-YEL
50	I2-4	IFI-2F	QUE 1	102	O5-7	IFI-15-3	DET. RESET
51	I2-5	IFI-5F	MAIN 1	103	O5-8	C6-10	WDT
52	I2-6	IFI-5W	MAIN 2	104	DC GND	TB1/3-7	DC GND BUS

NOTES: C7S CONNECTOR PIN 7 is not assigned.
TB1/26 - TERMINAL BLOCK 1 POSITION 26.

PDA NO.4 CMS ISO MOD and CFP CONNECTOR ASSIGNMENTS

CFP Connector				CMS Isolation Module			
PIN	FUNCTION		PIN	PIN	FUNCTION		SOURCE
1	PDM Addr 1	IN	1	2	PDM Addr 1	OUT	CEX - 4
2	PDM Addr 2	IN	3	4	PDM Addr 2	OUT	CEX - 3
3	PDM Addr 3	IN	5	6	PDM Addr 3	OUT	CEX - 2
4	PDM Addr 4	IN	7	8	PDM Addr 4	OUT	CEX - 1
5	PXDA Addr 1	IN	9	10	PXDA1 Select	OUT	CEA - 9
6	PXDA Addr 2	IN	11	12	PXDA2 Select	OUT	CEB - 9
7	PXDA Addr 3	IN	13	14	PXDA3 Select	OUT	CEC - 9
8	NA		15	16	PXDA4 Select	OUT	CED - 9
9	NA		17	18	PXDA5 Select	OUT	CEE - 9
10	Data 1	IN	19	20	Data 1	OUT	CEX - 15
11	Data 2	IN	21	22	Data 2	OUT	CEX - 14
12	Data 3	IN	23	24	Data 3	OUT	CEX - 13
13	Data 4	IN	25	26	Data 4	OUT	CEX - 12
14	Data 5	IN	27	28	Data 5	OUT	CEX - 11
15	Data 6	IN	29	30	Data 6	OUT	CEX - 10
16	Data 7	IN	31	32	Data 7	OUT	CEX - 22
17	Data 8	IN	33	34	Data 8	OUT	CEX - 21
18	CLOCK	IN	35	36	CLOCK	OUT	CEX - 20
19	ENABLE	IN	37	38	ENABLE	OUT	CEX - 19
20	CLEAR	IN	39	40	CLEAR	OUT	CEX - 18
21	Dim Control	IN	41	42	Dim Control	OUT	CEX - 17
22	NA		43	44	NA		
23	NA		45	46	NA		
24	NA		47	48	NA		
25	NA		49	50	NA		
26	NA		51	52	NA		
27	PXDA LATCH	OUT	53	54	PXDA 1 LATCH	IN	CEA - 24
28	TEST REQUEST		55	56	PXDA 2 LATCH	IN	CEB - 24
29	NA		57	58	PXDA 3 LATCH	IN	CEC - 24
30	NA		59	60	PXDA 4 LATCH	IN	CED - 24
31	NA		61	62	PXDA 5 LATCH	IN	CEE - 24
32	NA		63	64	NA		
33	NA						
34	EXT +12 VDC		65	66	CMS +24 VDC		TB 3 / 1
35	EXT -12 VDC		67	68	CMS +24 VDC		TB 3 / 1
36	EXT VDC GND		69	70	CMS VDC GND		TB 3 / 3
37	EXT VDC GND		71	72	CMS VDC GND		TB 3 / 3

NOTE: 1. The CMS Isolation Module's PC socket connector pin location shall be positioned as viewed from the PDA No.4 front.
2. The CMS Isolation Module's card connector shall be keyed between pins 8 and 9.

DEFINITIONS:

PDM Addr 1	- Pixel Driver Module Address Line 1.
PXDA Addr 1	- Pixel Driver Assembly Address Line 1.
CEX - 6	- Assigned to all 5 CE Connectors Pin 6.
TB 3 / 1	- Terminal Block 3 Position No.1.
Dim Control	- Dimmer Control.
PXDA 1 Select	- PXDA No.1 Select Line.
IN	- Into Module and/or Connector.
OUT	- Out from Module and/or Connector.

PDA NO.4

CMS CE(A to E) and TERMINAL BLOCK CONNECTOR ASSIGNMENTS

CEP CONNECTORS

PIN	FUNCTION		SOURCE	PIN	FUNCTION	SOURCE
4	PDM Addr	1	ISO - 2	19	ENABLE	ISO - 38
3	PDM Addr	2	ISO - 4	18	CLEAR	ISO - 40
2	PDM Addr	3	ISO - 6	17	DIM CONTROL	ISO - 42
1	PDM Addr	4	ISO - 8	22	NA	
9	PXDA SELECT		ISO - 10 to 18	23	NA	
6	NA			24	NA	
7	NA			25	NA	
8	NA			26	NA	
9	NA			24	*PXDA 1 LATCH	ISO - 54
15	DATA	1	ISO - 20	24	*PXDA 2 LATCH	ISO - 56
14	DATA	2	ISO - 22	24	*PXDA 3 LATCH	ISO - 58
13	DATA	3	ISO - 24	24	*PXDA 4 LATCH	ISO - 60
12	DATA	4	ISO - 26	24	*PXDA 5 LATCH	ISO - 62
11	DATA	5	ISO - 28	32	NA	
10	DATA	6	ISO - 30	33	NA	
22	DATA	7	ISO - 32	34	VDC GND	TB 3 / 3
21	DATA	8	ISO - 34	35	VDC GND	TB 3 / 3
20	CLOCK		ISO - 36	36	+ 24 VDC	TB 3 / 1
				37	+ 24 VDC	TB 3 / 1

TERMINAL BLOCKS

TB NO.	POSITION	SOURCE
T2	1	NA
T2	2	NA
T2	3	NA
T2	4	NA
T2	5	AC-
T2	6	FAN
T2	7	CB EQUIP.
T2	8	EQ. GND BUS
T2	9	MAIN
T2	10	AC-
T1 & T4	1 to 10	NA
T3	1 to 2	+ 24 VDC P.S.
T3	3 to 4	VDC GND P.S.

NOTE: *Each Latch Line is a decoded line from the CMS ISO MOD and each line shall be connected to the appropriate CE Connector Pin per PXDA Assignment.

DEFINITIONS:

ISO - A	-	CMS Isolation Module Connector Pin A.
PXDA SELECT	-	PXDA Select Line.
PDM Addr 1	-	Lamp Driver Module Address Line 1.
P.S.	-	Model 206 Power Supply.
TB 3 / 1	-	Terminal Block 3 Position 1.
CB EQUIP	-	Equipment Circuit Breaker

PIXEL DRIVER MODULE CONNECTOR ASSIGNMENTS

PIN	FUNCTION	SOURCE	PIN	FUNCTION	SOURCE
1	PDM Addr 1	CDX - 4	A	DATA 1	CDX -15
2	PDM Addr 2	CDX - 3	B	DATA 2	CDX -14
3	PDM Addr 3	CDX - 2	C	DATA 3	CDX -13
4	PDM Addr 4	CDX - 1	D	DATA 4	CDX -12
5	PXDA SELECT	CDX - 9	E	DATA 5	CDX -11
6	I.D. SLOT 1	PXDAM	F	DATA 6	CDX -10
7	I.D. SLOT 2	PXDAM	H	DATA 7	CDX -22
8	I.D. SLOT 3	PXDAM	J	DATA 8	CDX -21
9	I.D. SLOT 4	PXDAM	K	CLOCK	CDX -20
10	DC GND	CDX -34 to 35	L	ENABLE	CDX -19
11	NA		M	PXDA LATCH	CDX -24
12	NA		N	CLEAR	CDX -18
13	NA		P	+ 24 VDC	CDX -36 to 37
14	NA		R	DC GND	CDX -34 to 35
15	NA		S	DIM CONTROL	CDX -17
16	NA		T	NA	
17	NA		U	NA	
18	AC + 1	PXDA TB 1-1	V	AC + 1	PXDA TB 1-1
19	AC + 1	PXDA TB 1-1	W	AC + 1	PXDA TB 1-1
20	AC + 2	PXDA TB 1-2	X	AC + 2	PXDA TB 1-2
21	AC + 2	PXDA TB 1-2	Y	AC + 2	PXDA TB 1-2
22	AC + 3	PXDA TB 1-3	Z	AC + 3	PXDA TB 1-3
23	AC + 3	PXDA TB 1-3	AA	AC + 3	PXDA TB 1-3
24	CCS 1	P1-1	BB	CCS21	P3-5
25	CCS 2	P1-2	CC	CCS22	P3-6
26	CCS 3	P1-3	EE	CCS23	P3-7
27	CCS 4	P1-4	FF	CCS24	P3-8
28	CCS 5	P1-5	HH	CCS25	P4-1
29	CCS 6	P1-6	JJ	CCS26	P4-2
30	CCS 7	P1-7	KK	CCS27	P4-3
31	CCS 8	P1-8	LL	CCS28	P4-4
32	CCS 9	P2-1	MM	CCS29	P4-5
33	CCS 10	P2-2	NN	CCS30	P4-6
34	CCS 11	P2-3	PP	CCS31	P4-7
35	CCS 12	P2-4	RR	CCS32	P4-8
36	CCS 13	P2-5	SS	CCS33	P5-1
37	CCS 14	P2-6	TT	CCS34	P5-2
38	CCS 15	P2-7	UU	CCS35	P5-3
39	CCS 16	P2-8	VV	CCS36	P5-4
40	CCS 17	P3-1	WW	CCS37	P5-5
41	CCS 18	P3-2	XX	CCS38	P5-6
42	CCS 19	P3-3	YY	CCS39	P5-7
43	CCS 20	P3-4	ZZ	CCS40	P5-8

NOTES:
1. The Pixel Driver Module Connector shall be a 43/86 Edge Connector.
2. AC+ 1, AC+ 2 and AC+ 3 and associated AC- Bus of T.B. A1 & 2 shall be routed to associated PDM connectors, T.B. A1 to PDM connectors 7 to 12 and T.B. A2 to PDM connectors 1 to 6.

DEFINITIONS:

PDM Addr 1	-	Pixel Driver Module Address Line 1.
PXDA SELECT	-	PXDA Address Enable Line.
PXDAM	-	PXDA Motherboard Network.
CDX - 1	-	Assigned to all 5 CD Connectors (A to E) Pin 1.
CCS 1	-	CC Socket Connector Pin 1.
P1-1	-	Pixel 1-1 (As designated from Detail 8-7-14).
PXDA TB 1-2	-	PXDA Terminal Block 1 Position 2.

CONTROLLER ISOLATION ASSEMBLY
CONNECTOR PIN ASSIGNMENTS FOR C8 AND C9 CONNECTORS

CONNECTOR	PIN	FUNCTION	CONNECTOR	PIN	FUNCTION
C8	1	PDM Addr 1	C9	1	CLOCK
C8	2	Ground	C9	2	Ground
C8	3	PDM Addr 2	C9	3	ENABLE
C8	4	Ground	C9	4	Ground
C8	5	PDM Addr 3	C9	5	CLEAR
C8	6	Ground	C9	6	Ground
C8	7	PDM Addr 4	C9	7	Dim Control Line
C8	8	Ground	C9	8	Ground
C8	9	PXDA Addr 1	C9	9	NA
C8	10	Ground	C9	10	NA
C8	11	PXDA Addr 2	C9	11	NA
C8	12	Ground	C9	12	NA
C8	13	PXDA Addr 3	C9	13	LATCH
C8	14	Ground	C9	14	Ground
C8	15	NA	C9	15	TEST
C8	16	NA	C9	16	Ground
C8	17	NA	C9	17	NA
C8	18	NA	C9	18	NA
C8	19	Data 1	C9	19	NA
C8	20	Ground	C9	20	NA
C8	21	Data 2	C9	21	NA
C8	22	Ground	C9	22	NA
C8	23	Data 3	C9	23	NA
C8	24	Ground	C9	24	NA
C8	25	Data 4	C9	25	NA
C8	26	Ground	C9	26	NA
C8	27	Data 5	C9	27	NA
C8	28	Ground	C9	28	NA
C8	29	Data 6	C9	29	NA
C8	30	Ground	C9	30	NA
C8	31	Data 7	C9	31	NA
C8	32	Ground	C9	32	NA
C8	33	Data 8	C9	33	NA
C8	34	Ground	C9	34	EXT +12 VDC
C8	35	NA	C9	35	EXT - 12 VDC
C8	36	NA	C9	36	Ground
C8	37	NA	C9	37	Ground

DEFINITIONS: Ground - DC Ground.
PDM Addr 1 - Pixel Driver Module Address Line 1.
PXDA Addr 1 - Pixel Driver Assembly Address Line 1.

NOTE: C8 keyed at pin 17, and C9 keyed at pin 12.

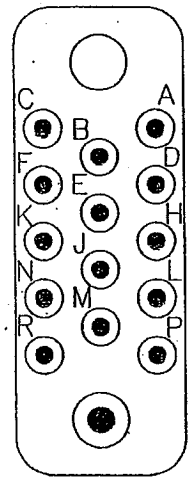

DB-9 CONNECTOR		C2 CONNECTOR	
(Rx)	2	K	(DATA OUT)
(Tx)	3	L	(DATA IN)
(DTR)	4	J	(RTS)
(DSR)	6	M	(CTS)
(GND)	5	N	(GND)
(RTS)	7	H	(CD)
(CTS)	8		

NOTES:
Pins Not Shown Are Not Connected.

MODEL 500/510/520 CMS SYSTEMS		
Direct Mode DB9 Communications Cable		
Between Laptop and 170 Controller		
No Scale	FEBRUARY 2003	8-7-30

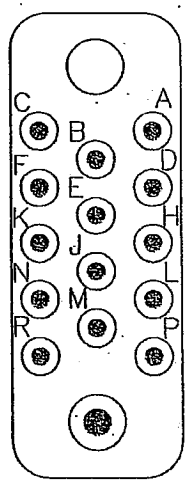

DB-9 CONNECTOR		C2 CONNECTOR
(Rx) 2	———	K (DATA OUT)
(Tx) 3	———	L (DATA IN)
(RTS) 7	———	J (RTS)
(CTS) 8	———	M (CTS)
(GND) 5	———	N (GND)
(CDC) 1	———	H (CD)

NOTES:
Pins Not Shown Are Not Connected.

MODEL 500/510/520 CMS SYSTEMS		
Title: Modem DB9 Communications Cable Between Modem and 170 Controller		
No Scale	NOVEMBER 2002	8-7-31

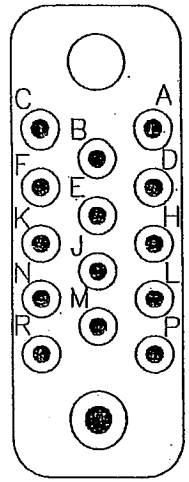

DB-25 CONNECTOR		C2 CONNECTOR
(Rx) 3	———	K (DATA OUT)
(Tx) 2	———	L (DATA IN)
(RTS) 4	———	J (RTS)
(CTS) 5	———	M (CTS)
(GND) 7	———	N (DC GND)
(DSR) 6	———	H (CD)
(DTR) 20	———	

NOTES:
Pins Not Shown Are Not Connected.

MODEL 500/510/520 CMS SYSTEMS		
Title: Direct Mode DB-25 Communications Cable		
Between Computer and 170 Controller		
No Scale	FEBRUARY 2003	8-7-32

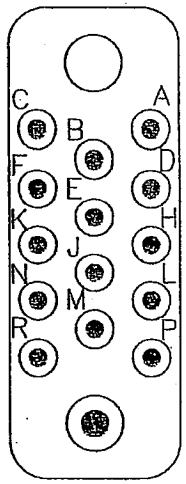

DB-25 CONNECTOR		C2 CONNECTOR
(Rx) 3	———	K (DATA OUT)
(Tx) 2	———	L (DATA IN)
(RTS) 4	———	J (RTS)
(CTS) 5	———	M (CTS)
(GND) 7	———	N (DC GND)
(CDC) 8	———	H (CD)

NOTES:
Pins Not Shown Are Not Connected.

MODEL 500/510/520 CMS SYSTEMS		
Title: Modem DB-25 Communications Cable		
Between Modem and 170 Controller		
No Scale	FEBRUARY 2003	8-7-33

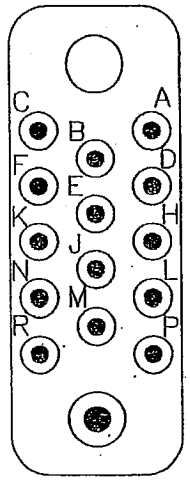

DB-9 CONNECTOR		C20 or C2 CONNECTOR
(Rx) 2	———	L (DATA OUT)
(Tx) 3	———	K (DATA IN)
(CTS) 8	———	M (CTS)
(GND) 5	———	N (GND)
(CDC) 1	———	H (CD)

NOTES:
Pins Not Shown Are Not Connected.

MODEL 500/510/520 CMS SYSTEMS		
Title: GDI Modem DB9 Communications Cable		
Between GDI Modem and 170 Controller		
No Scale	FEBRUARY 2003	8 - 7 - 34

SECTION 8

MODELS 500 CMS PLAN DETAILS

	PLAN
MODEL 500 SIGN HOUSING, FRONT AND SIDE VIEWS	8-8-1
MODEL 500 SIGN HOUSING, REAR AND TOP VIEWS	8-8-2
TRANSFORMERS TO CIP WIRING DETAILS	8-8-3
CMS RETROFIT, LED WIRING DIAGRAM	8-8-4
PIXEL MATRIX MODULE, FRONT VIEW	8-8-5
PIXEL MATRIX MODULE, REAR VIEW	8-8-6
PIXEL MATRIX MODULE, SIDE VIEW, FULL PANEL MOLDING, OPTION 1	8-8-7
PIXEL MATRIX MODULE, SIDE VIEW, FULL PANEL MOLDING, OPTION 2	8-8-8
PIXEL MATRIX MODULE, END VIEW, LED PIXEL, TYPE 1	8-8-9
PIXEL MATRIX MODULE, END VIEW, LED PIXEL, TYPE 2	8-8-10
CMS CONTROL COMPARTMENT MOUNTING DETAIL	8-8-11
CMS TESTING SUPPORT FRAME, ELEVATION VIEW	8-8-12
CMS TESTING SUPPORT FRAME, PLAN VIEW	8-8-13
CMS LIFTING BRAKET	8-8-14
SHIPPING PALLET	8-8-15
PALLETIZED CMS, FRONT VIEW	8-8-16

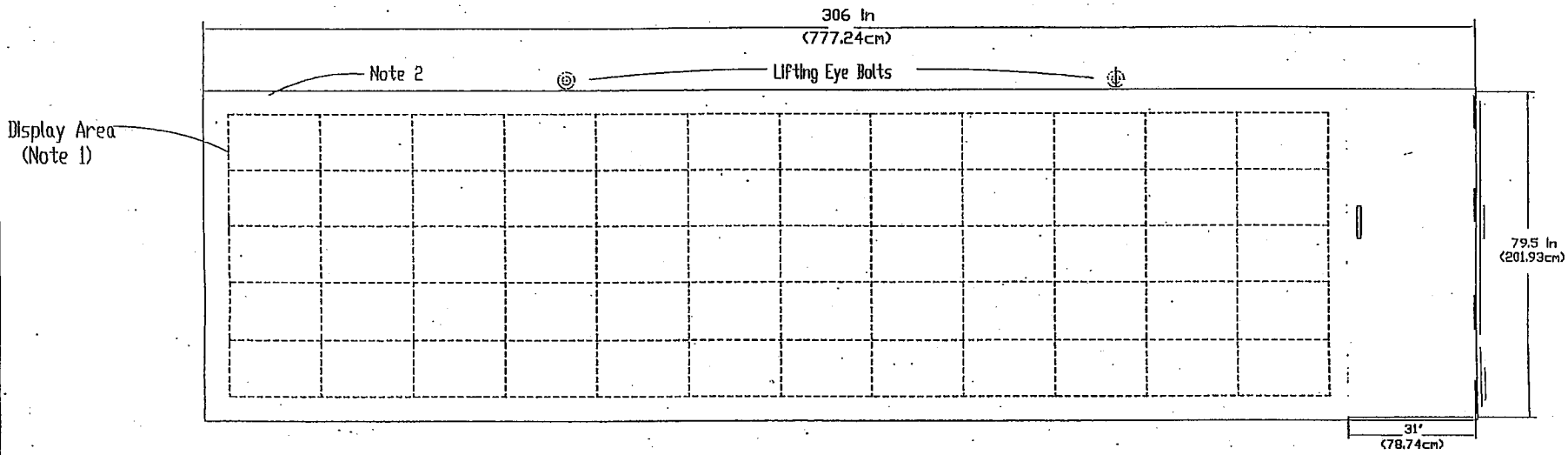

ELEVATION VIEW

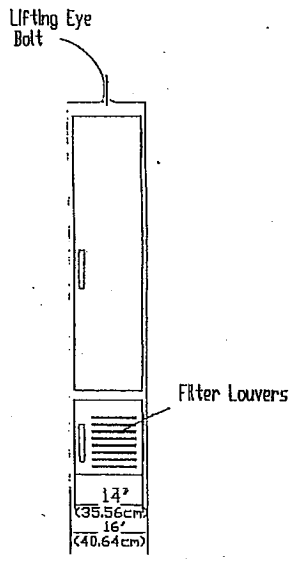

SIDE VIEW

NOTES:

1. Dimension between display area and top and bottom edge is 6" (15.24cm).

MODEL 500 CMS SYSTEM		
Title: Sign Housing Detail		
Elevation, Side Doors and End Cap		
No Scale	FEBRUARY 2003	8-8-1

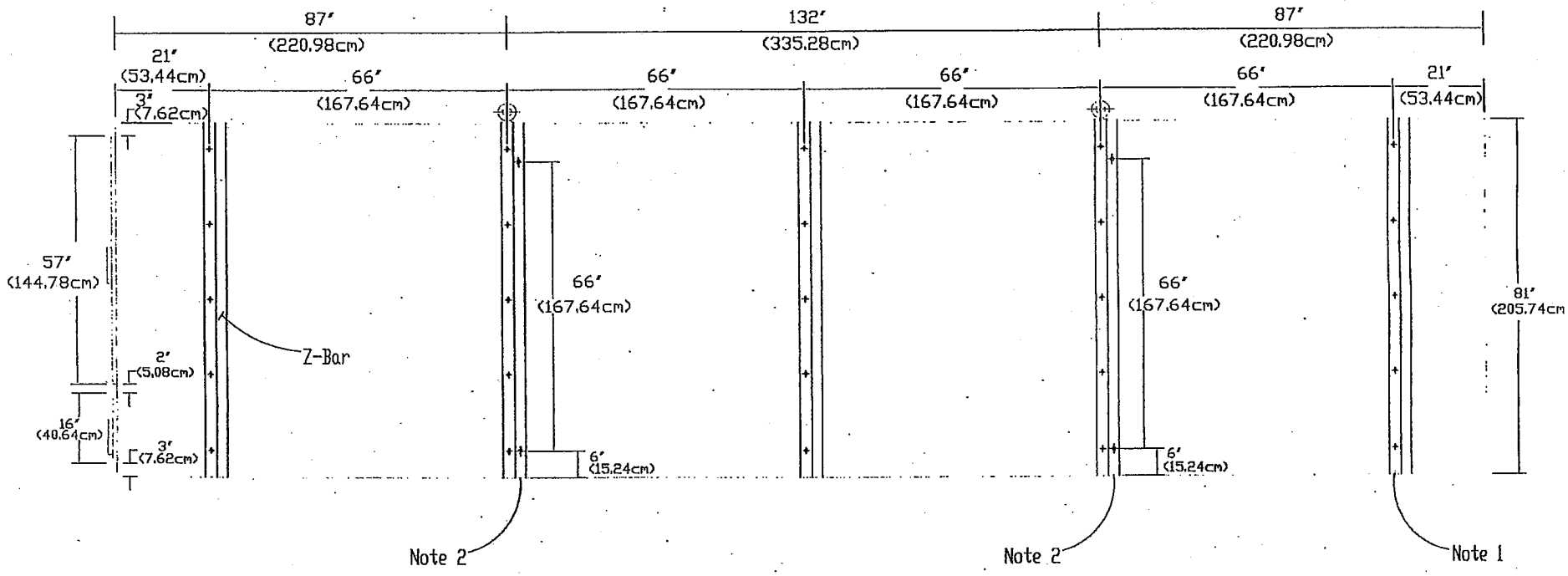

ELEVATION VIEW-REAR

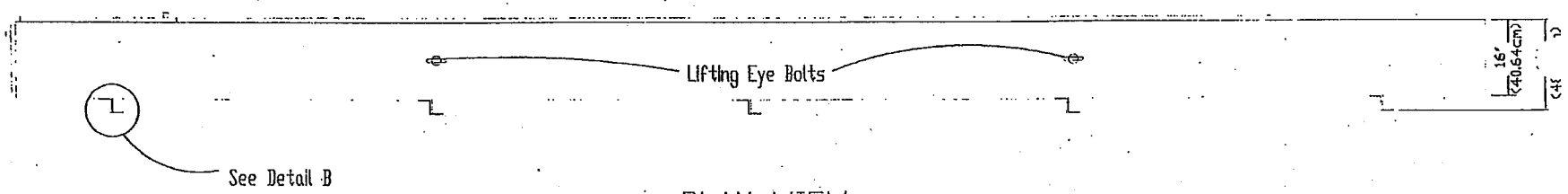

PLAN VIEW

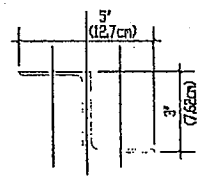

DETAIL B

NOTES/KEY:

1. Bolt supports to CMS housing, minimum 5 bolts per Z-Bar.
2. 3/4" (1.905cm) DIA holes for Mounting Bolts to CMS Test Stand
3. Z-Bar shall be made of 0.25" (0.635cm) aluminum.

MODEL 500 CMS SYSTEM		
Title: Sign Housing Detail		
Elevation-Rear, Plan, and Z-Bar		
No Scale	FEBRUARY 2003	8-8-2

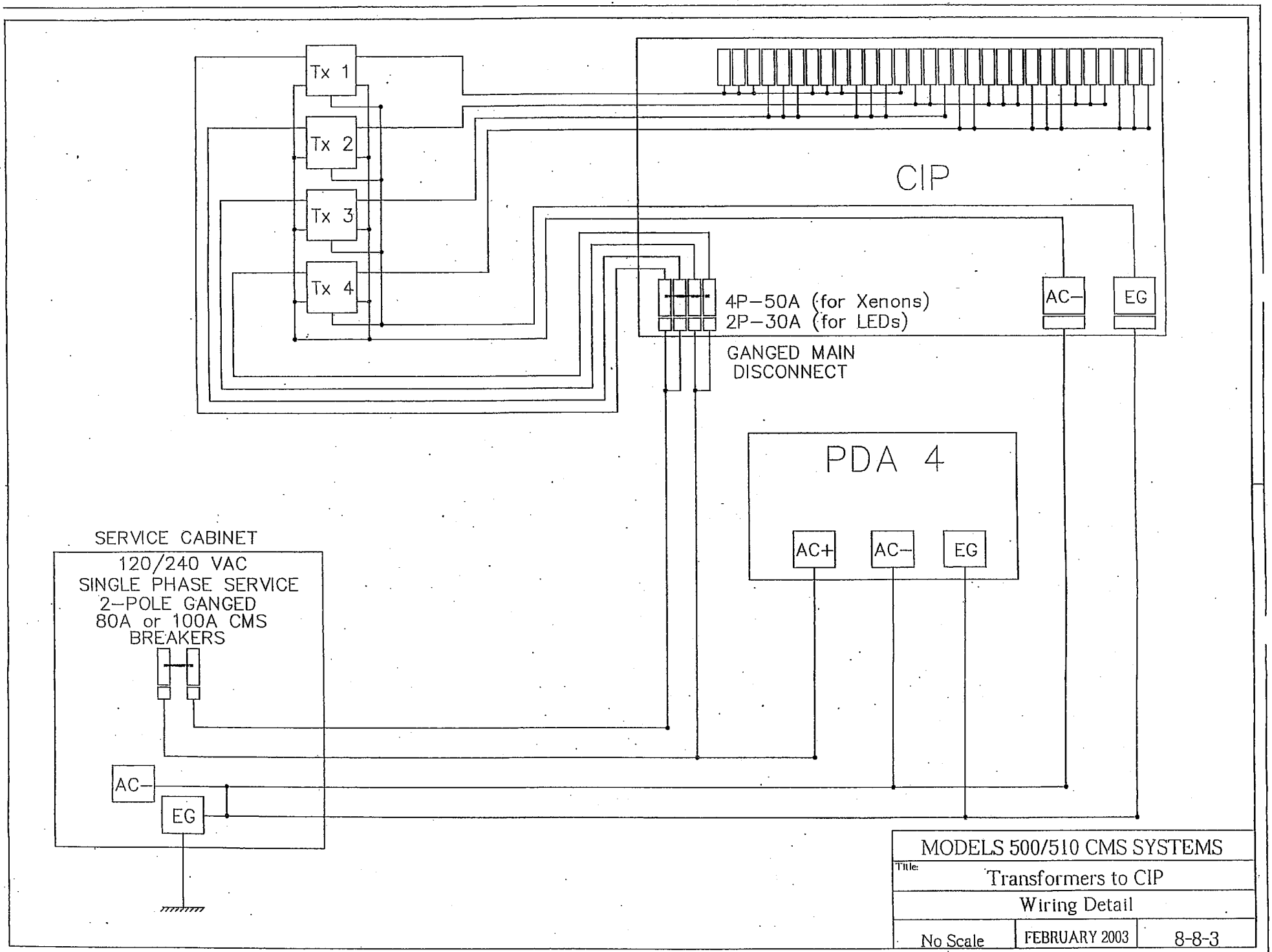
Tx 1
Tx 2
Tx 3
Tx 4
CIP
4P–50A (for Xenons)
2P–30A (for LEDs)
GANGED MAIN
DISCONNECT
AC–
EG
PDA 4
AC+
AC–
EG
SERVICE CABINET
120/240 VAC
SINGLE PHASE SERVICE
2–POLE GANGED
80A or 100A CMS
BREAKERS
AC–
EG
MODELS 500/510 CMS SYSTEMS
Title:
Transformers to CIP
Wiring Detail
No Scale
FEBRUARY 2003
8-8-3

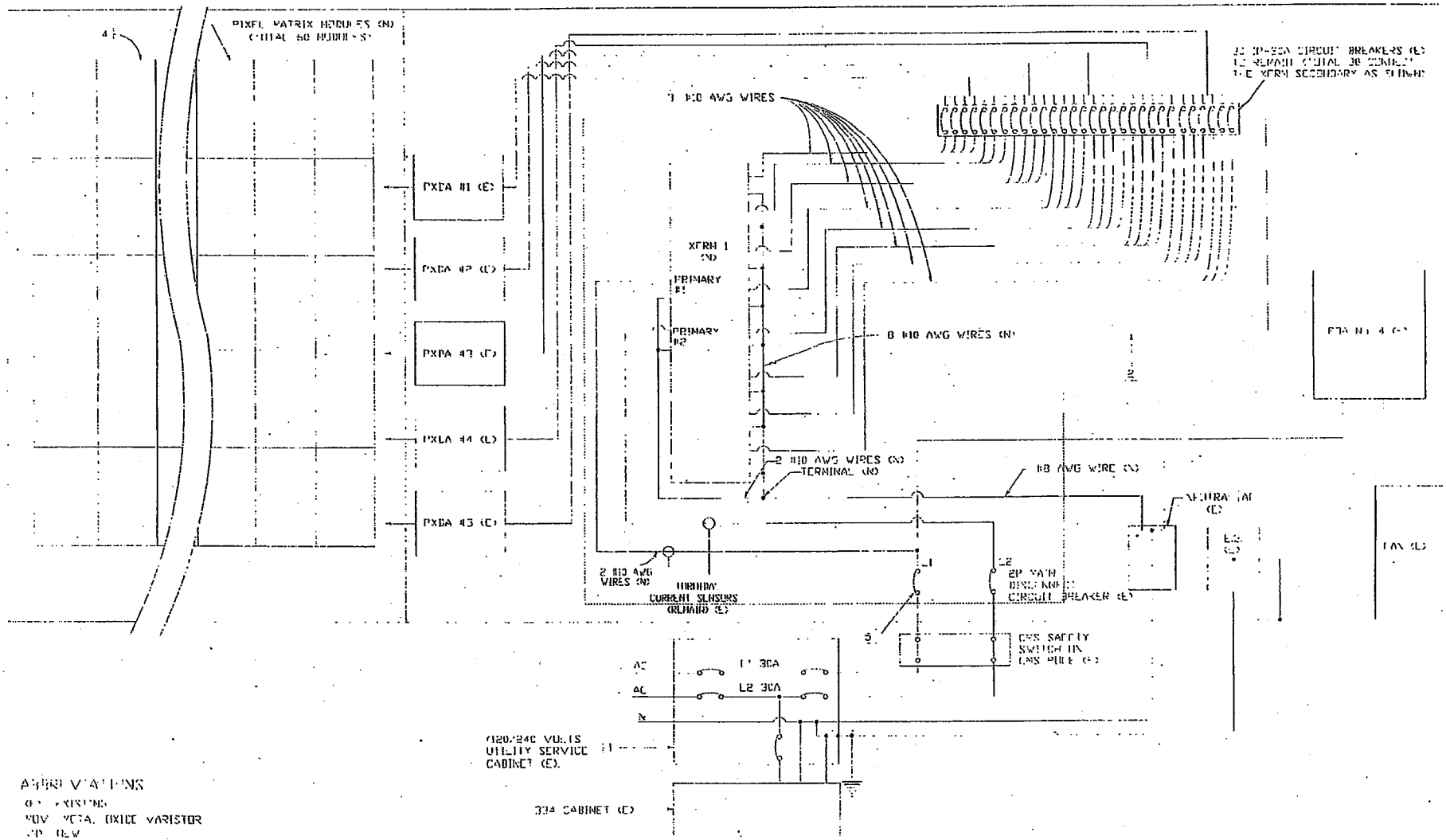

ABBREVIATIONS

(E) EXISTING
MOV METAL OXIDE VARISTOR
(N) NEW
XFRM TRANSFORMER

NOTES

1. SERVICE CABINET IS SHOWN FOR CONTRACTORS INFORMATION ONLY. NO MODIFICATION IS NECESSARY TO THIS CABINET.
2. REMOVE EXISTING FOUR WIRES FROM THE 2P MAIN DISCONNECT AND THIRTY (30) 20A CIRCUIT BREAKERS. MOUNT ONE CONTRACTOR FURNISHED TRANSFORMER (OR PACKER IN) PROVIDE MOUNTING HARDWARE. INSTALL TRANSFORMER PRIMARY WIRES (TWO #12 AWG) TO MAIN DISCONNECT. FOREVER CURRENT SENSORS. REMOVE MOVs.
3. INDIVIDUAL SECONDARY OUTPUT LEAD.
4. REMOVE (E) INCANDESCENT MODULES AND INSTALL 60 LED LAMP MODULES. CONTRACTOR FURNISHED CONNECT EXISTING CONNECTORS TO MODULE BACK (FOUR SCREWS HOLD THE MODULES TO THE RACK).
5. L1 & L2 WITH 30A CB. GANG L1 & L2 TOGETHER.

CMS RETROFIT, MODEL 500		
LED Wiring Diagram		
No Scale	FEBRUARY 2003	8-8-4

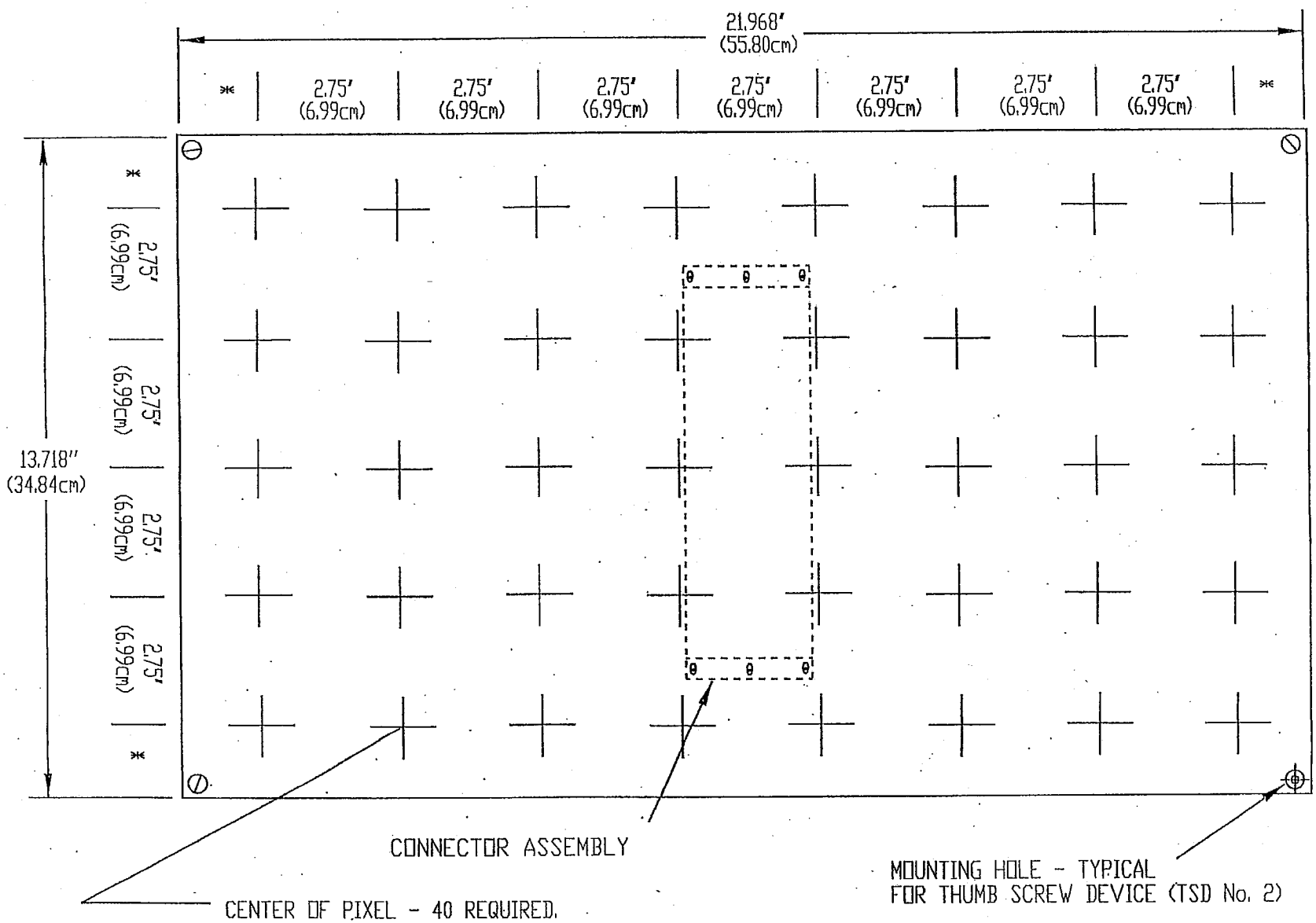

NOTE: * Measurement Includes tolerance

MODEL 500 CMS SYSTEM		
Title: PIXEL MATRIX MODULE		
Front View		
No Scale	FEBRUARY 2003	8-8-5

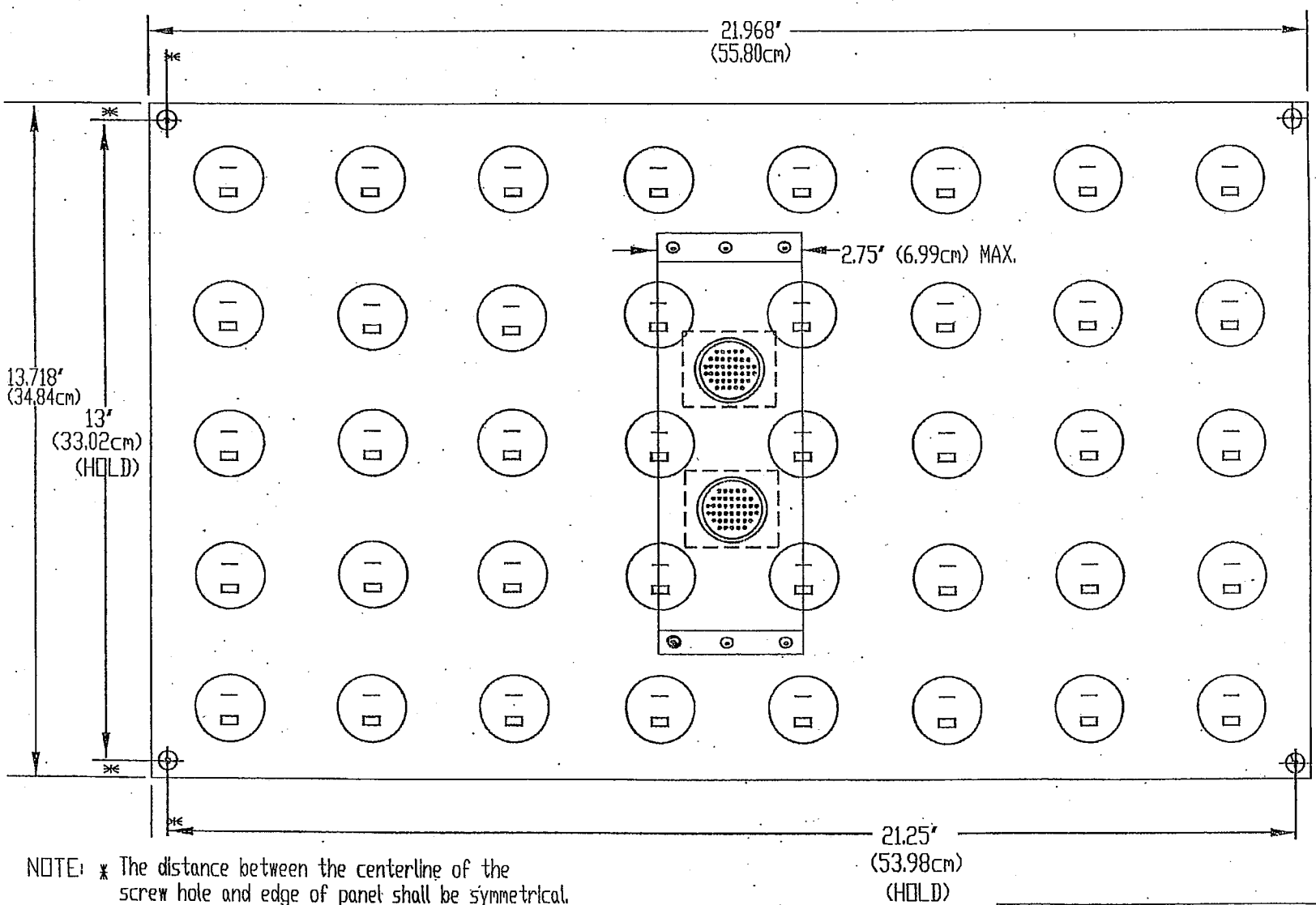

NOTE: * The distance between the centerline of the screw hole and edge of panel shall be symmetrical.

** or less

MODEL 500 CMS SYSTEM		
Title: PIXEL MATRIX MODULE		
Rear View		
No Scale	FEBRUARY 2003	8-8-6

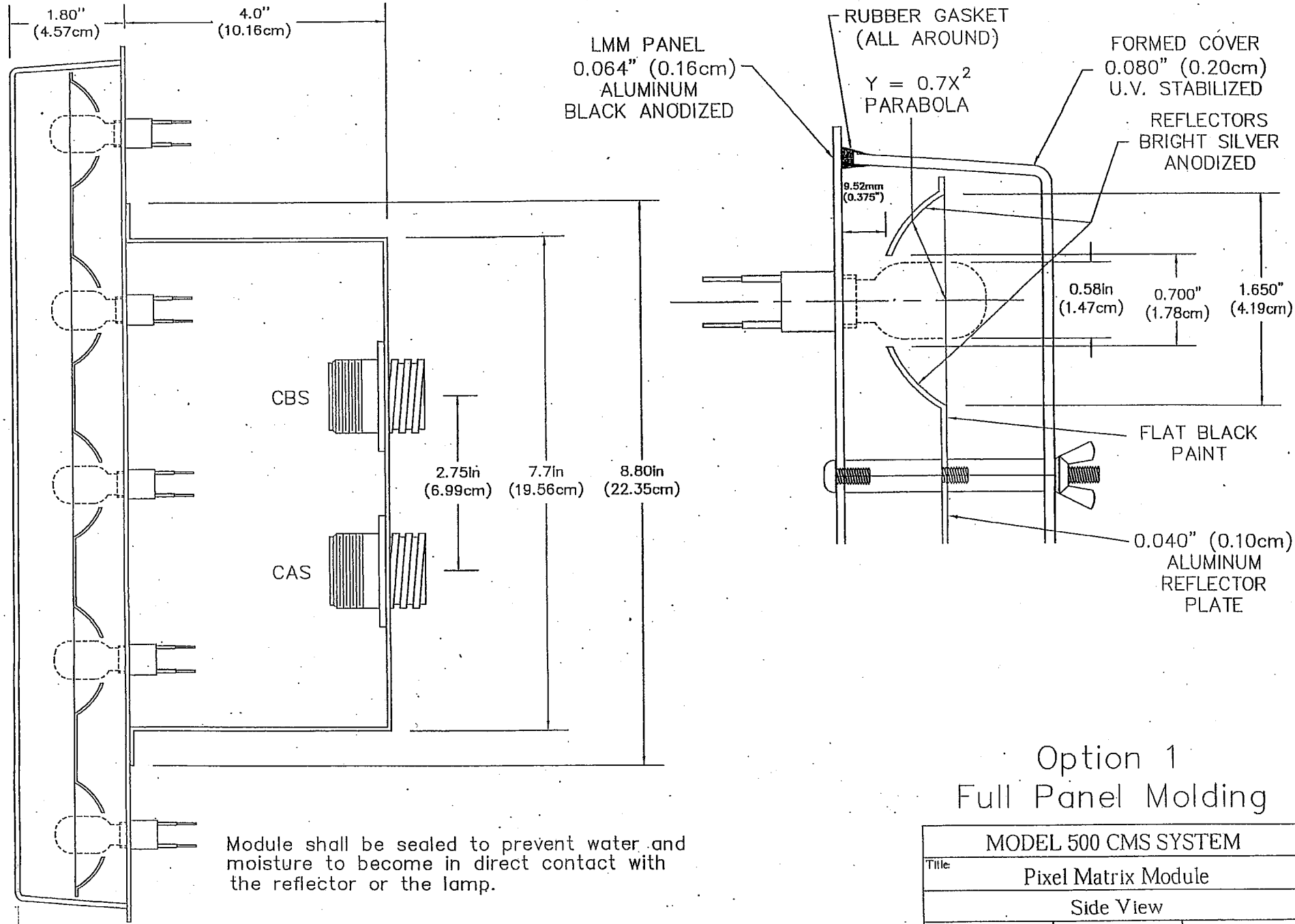

Option 1
Full Panel Molding

MODEL 500 CMS SYSTEM		
Title: Pixel Matrix Module		
Side View		
No Scale	FEBRUARY 2003	8-8-7

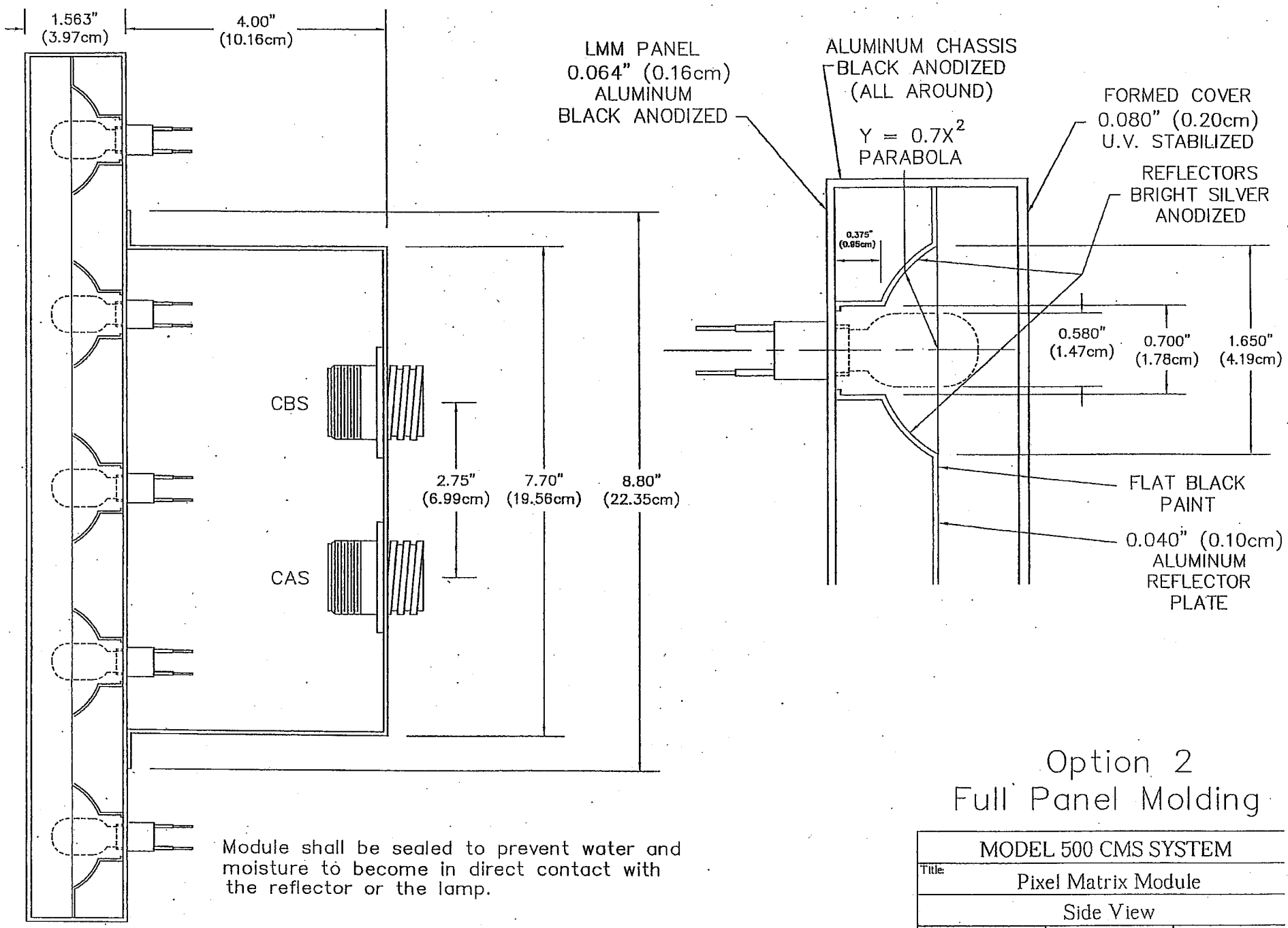
1.563"
(3.97cm)
4.00"
(10.16cm)
LMM PANEL
0.064" (0.16cm)
ALUMINUM
BLACK ANODIZED
ALUMINUM CHASSIS
BLACK ANODIZED
(ALL AROUND)
Y = 0.7X2
PARABOLA
FORMED COVER
0.080" (0.20cm)
U.V. STABILIZED
REFLECTORS
BRIGHT SILVER
ANODIZED
0.375"
(0.95cm)
CBS
CAS
2.75"
(6.99cm)
7.70"
(19.56cm)
8.80"
(22.35cm)
0.580"
(1.47cm)
0.700"
(1.78cm)
1.650"
(4.19cm)
FLAT BLACK
PAINT
0.040" (0.10cm)
ALUMINUM
REFLECTOR
PLATE
Module shall be sealed to prevent water and
moisture to become in direct contact with
the reflector or the lamp.
Option 2
Full Panel Molding
MODEL 500 CMS SYSTEM
Title:
Pixel Matrix Module
Side View
No Scale
FEBRUARY 2003
8-8-8

NOTES:

1. LED "Pixel" Assembly.
2. Plastic connector plug.
3. 0.0625-inch (0.159 cm) min. aluminum U-shaped bracket.
4. Thumb screw device (TSD No. 2)-typical. (Southco No. 47-62-301-60 or equal).
5. Universal head aluminum drive rivet-typical. (Southco No. 38-104-04-13 or equal).
6. Each Pixel shall have two 30.5 cm (12.02 in) leads to connect to the CAP or CBP as per section 8-8.

Nominal center to center spacing of pixel: 2.75" (6.99cm). See CMS Model 500 Specifications, Section 8, Figures 8-8-5 & 8-8-6 for addition dimensional Detail.

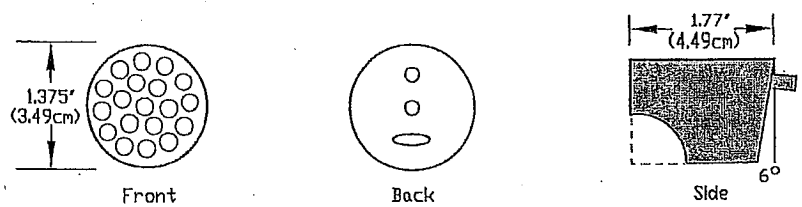

LED pixel (example)

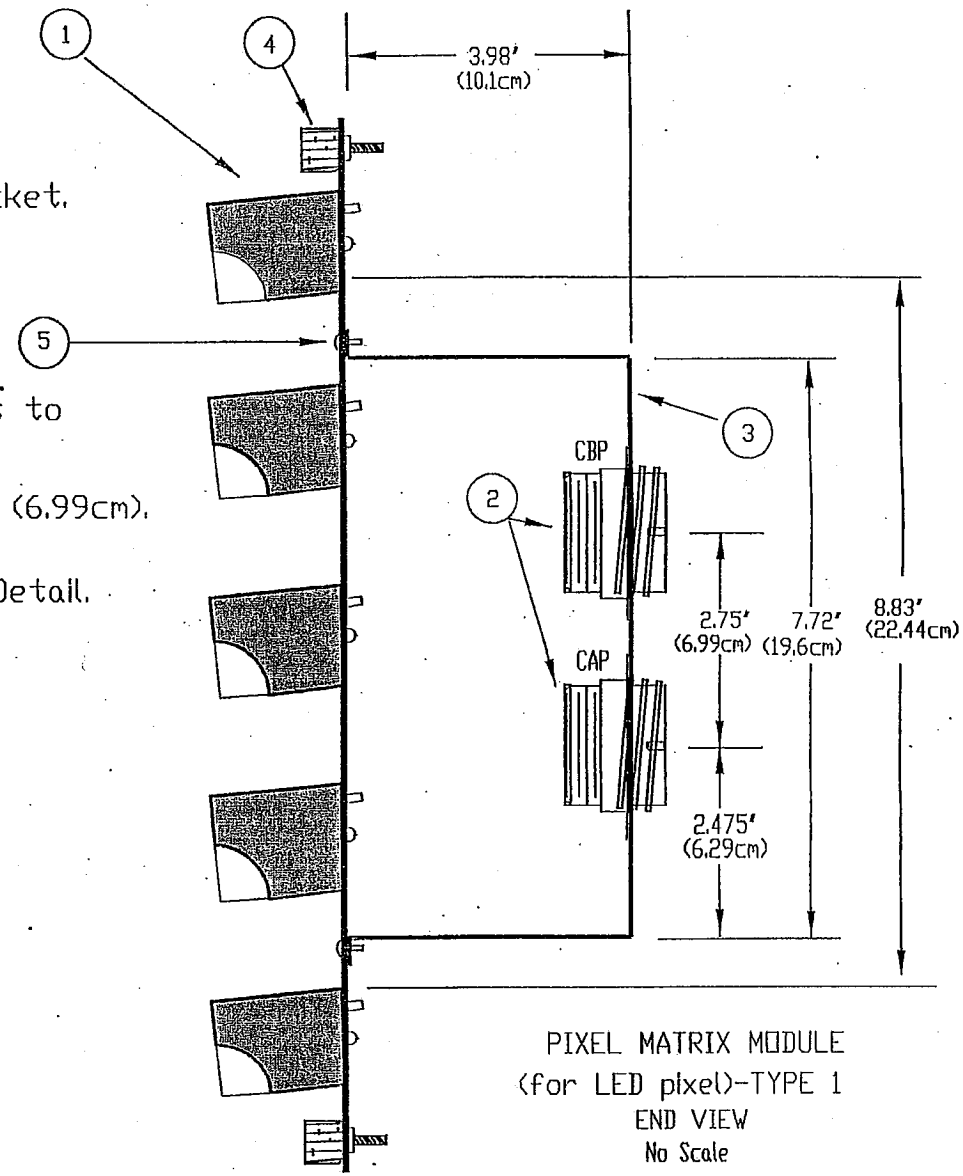

PIXEL MATRIX MODULE
(for LED pixel)-TYPE 1
END VIEW
No Scale

NOTES:

1. LED "Pixel" Assembly.
2. Plastic connector plug.
3. 0.0625-inch (0.16cm) min. aluminum U-shaped bracket.
4. Thumb screw device (TSD No. 2)-typical. (Southco No. 47-62-301-60 or equal).
5. Universal head aluminum drive rivet-typical. (Southco No. 38-104-04-13 or equal).
6. Formed plastic cover similar to cover on Xenon PMM's. See Section 8-8-8 for more details. The cover shall be coated or treated for glare & shall not disminish light output by more than 15%.
7. All pixels shall be mounted to the same PC board.

* Nominal center to center spacing of pixel: 2.75" (6.99cm).

* See CMS Model 500 Specifications, Section 8, Figures 8-8-5 & 8-8-6 for addition dimensional Detail.

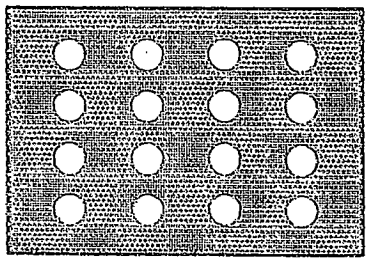

Front

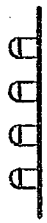

Side

LED Pixel Dimensions and Shape (example)

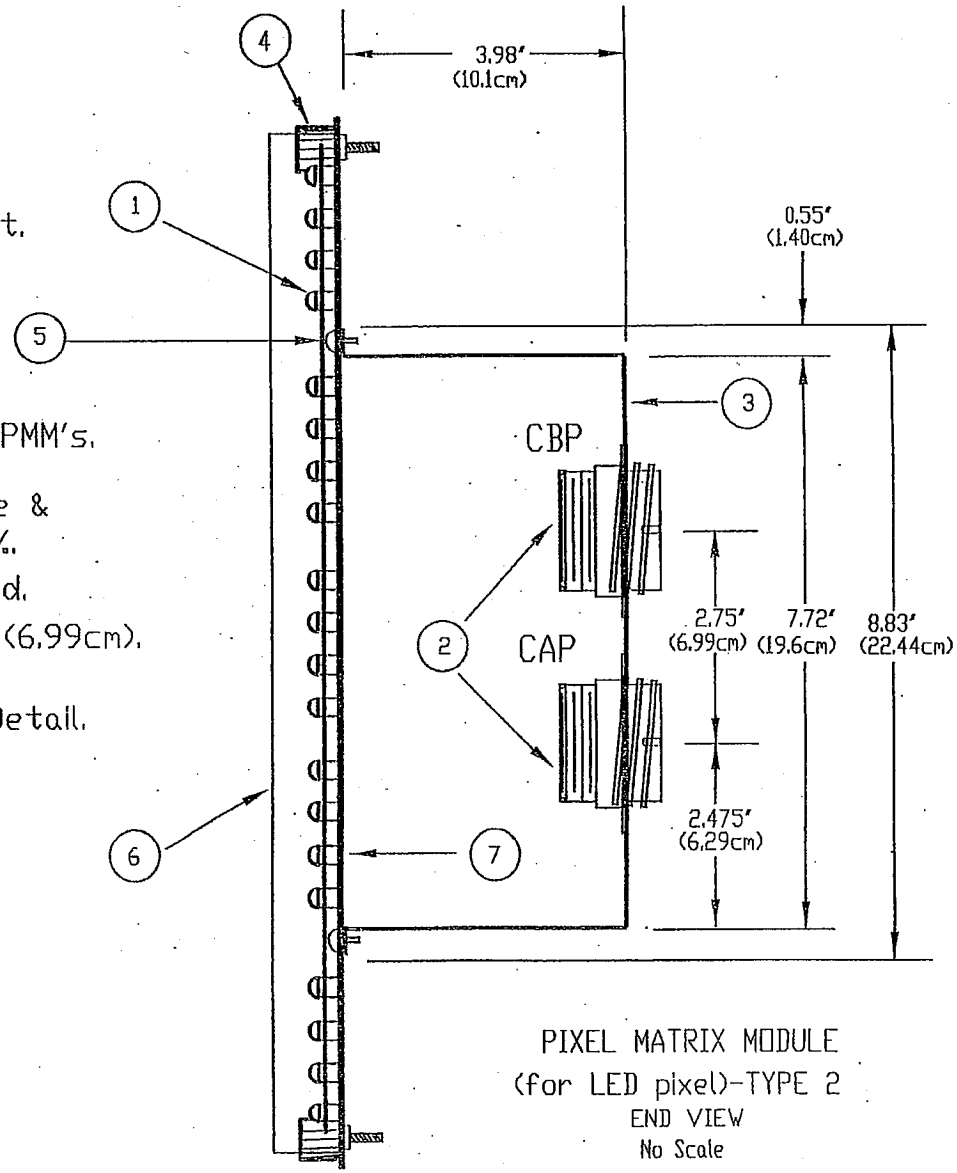

PIXEL MATRIX MODULE
(for LED pixel)-TYPE 2
END VIEW
No Scale

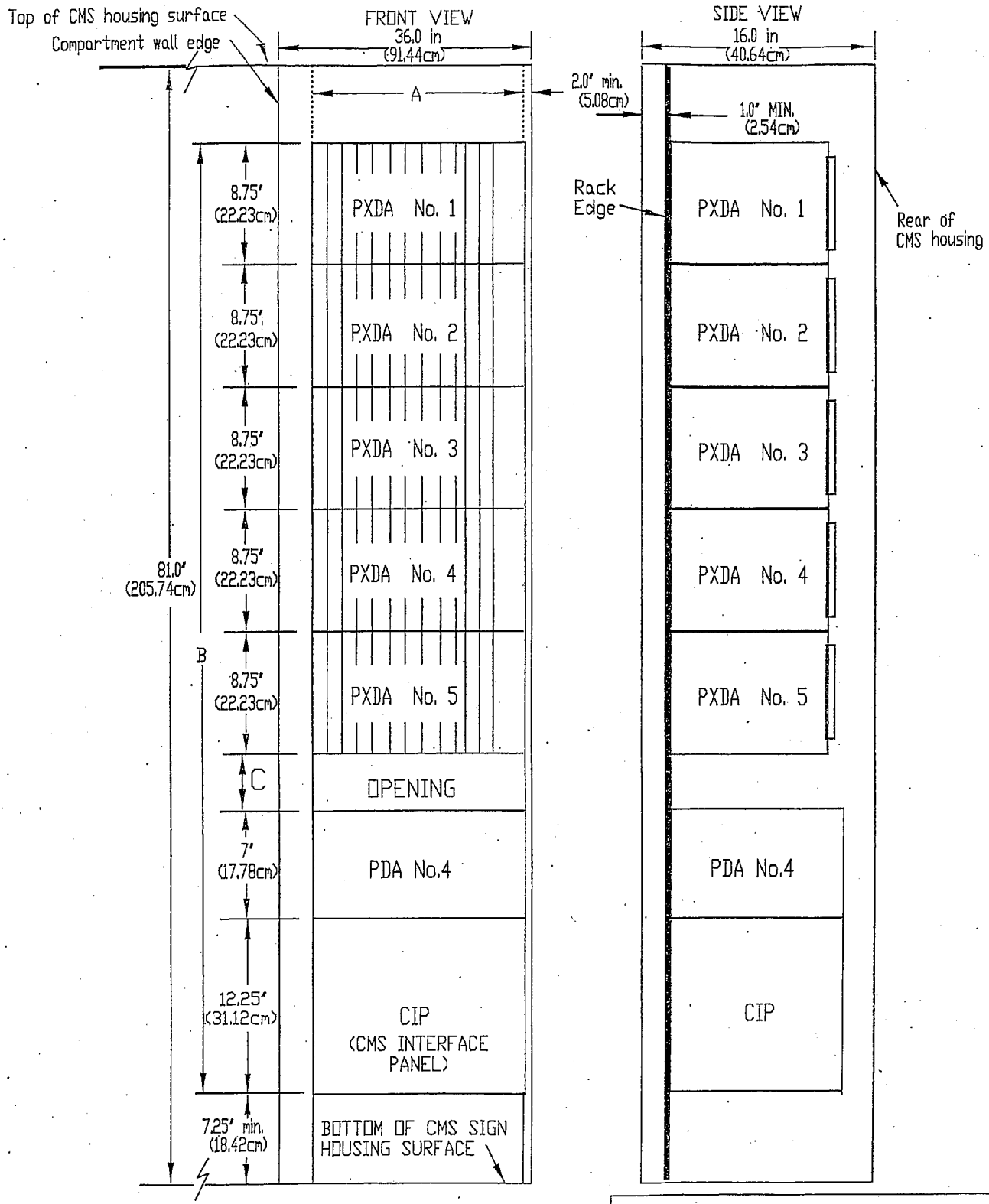

NOTES:

A - 21.0" (53.34cm) min. door opening.
B - 66.5" (168.9cm) min. rack mounting area and door opening.
C - A minimum of 1.75" (4.45cm) space shall be kept between PDA #4 and PXDA 5. These possible, spacing between PXDA's is desired.

MODEL 500 CMS SYSTEM		
CMS CONTROL COMPARTMENT		
Mounting Detail		
No Scale	Date: FEBRUARY 2003	8-8-11

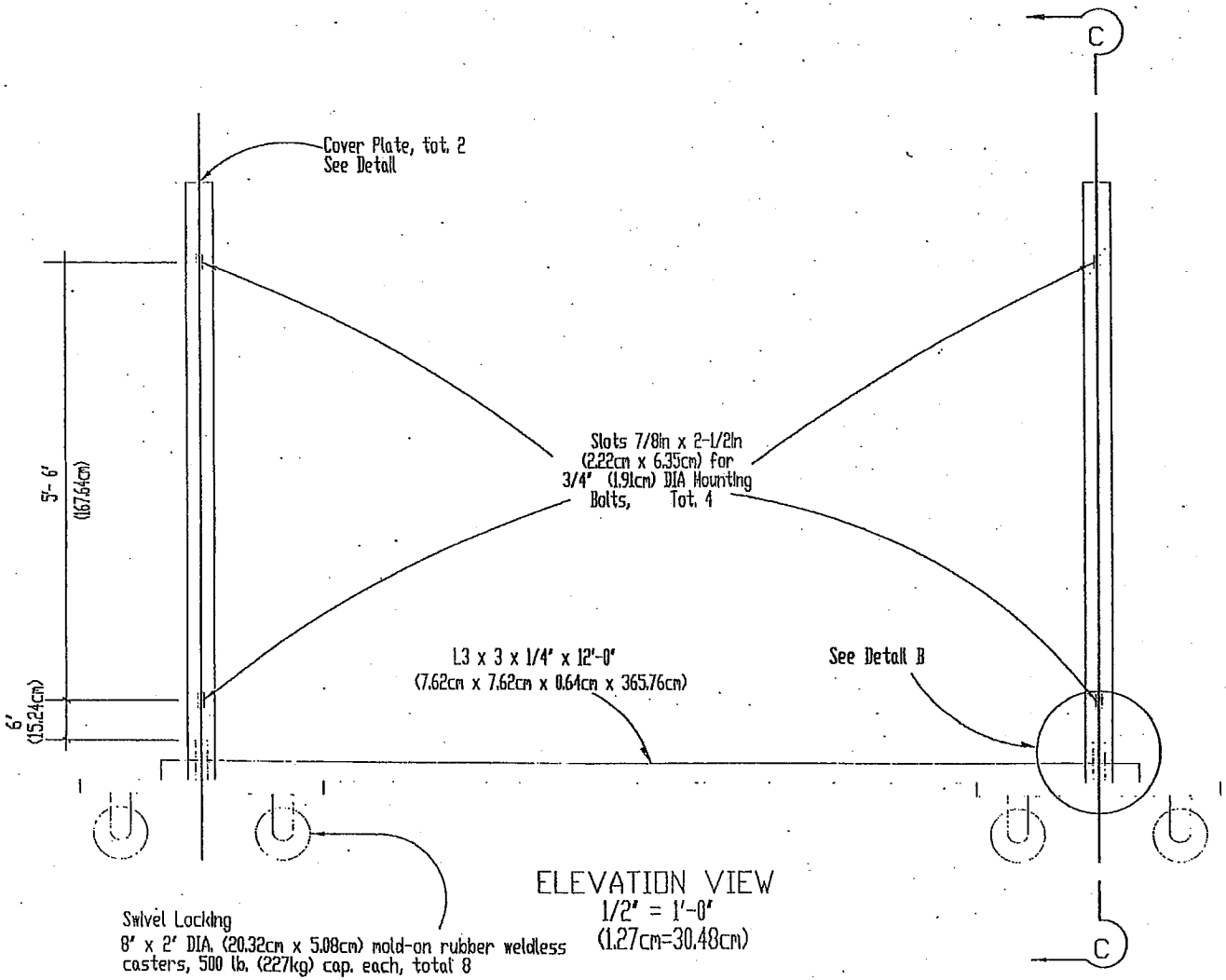

ELEVATION VIEW
1/2" = 1'-0"
(1.27cm=30.48cm)

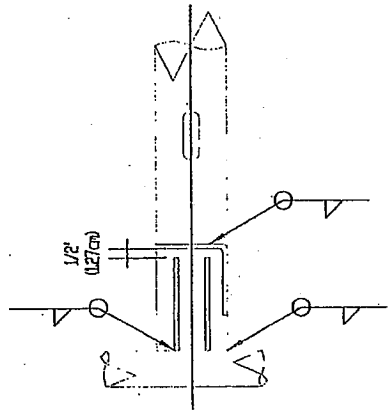

DETAIL B
1/2" = 1'-0"
(1.27cm=30.48cm)

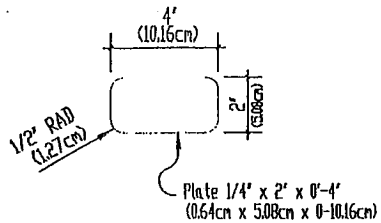

COVER PLATE DETAIL
3" = 1'-0"
(7.62cm = 30.48cm)

NOTES:

1. Drill L3"x3"x1/4" (7.62cmx7.62cmx0.64cm) & vertical posts as necessary to accomodate different sized signs.
2. All steel is A36.
3. All steel to be galvanized after fabrication.

MODEL 500.CMS SYSTEM		
TEST STAND		
Elevation View		
No Scale	FEBRUARY 2003	8-8-12

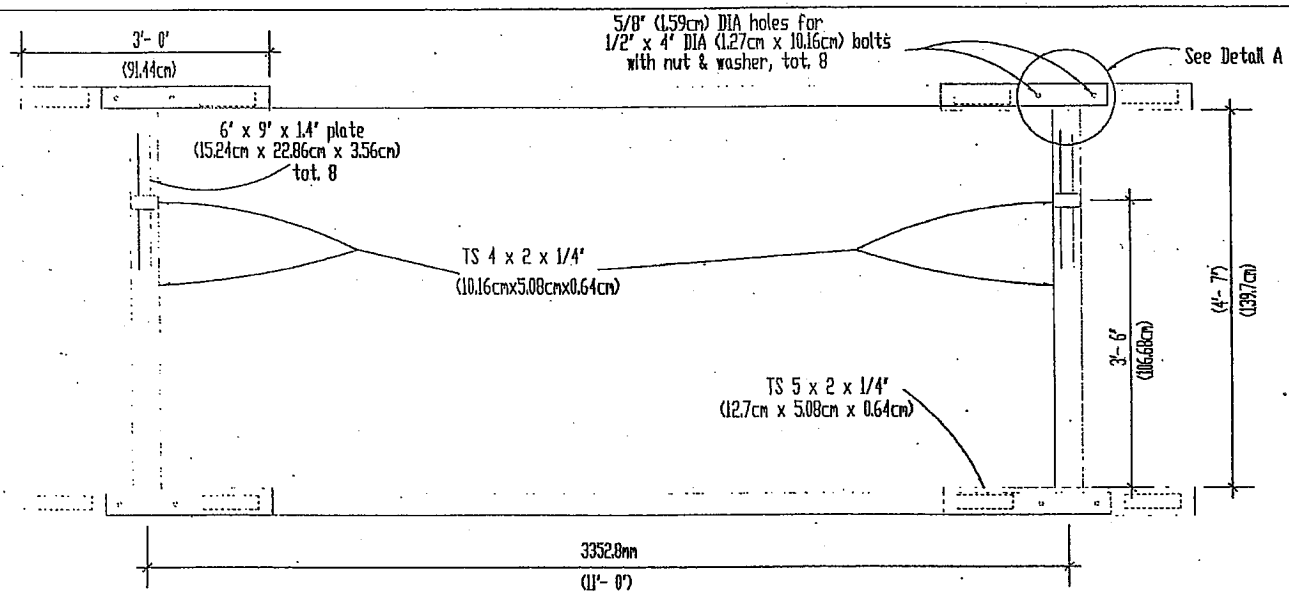

PLAN VIEW
1/2" = 1'-0"
(1.27cm=30.48cm)

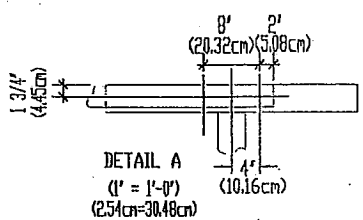

DETAIL A
(1" = 1'-0")
(2.54cm=30.48cm)

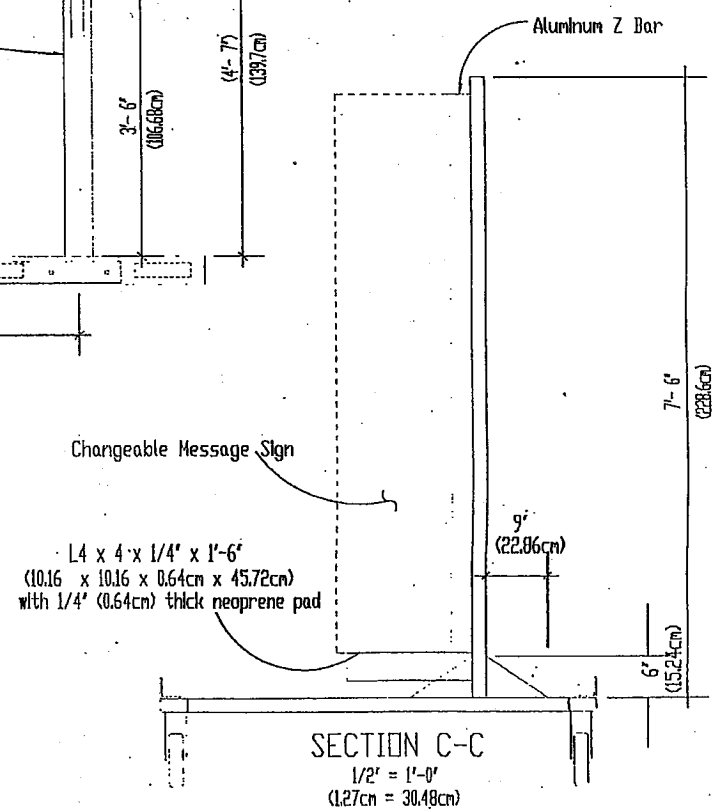

SECTION C-C
1/2" = 1'-0"
(1.27cm = 30.48cm)

Note:

1. Drill L3 x 3 x 1/4(L7.62cm x 7.62cm x 0.64cm) & vertical posts as necessary to accommodate different sized signs.
2. All steel is A36.
3. All steel to be galvanized after fabrication.

MODEL 500 CMS SYSTEM		
Title: TEST STAND		
PLAN VIEW		
No Scale	FEBRUARY 2003	8-8-13

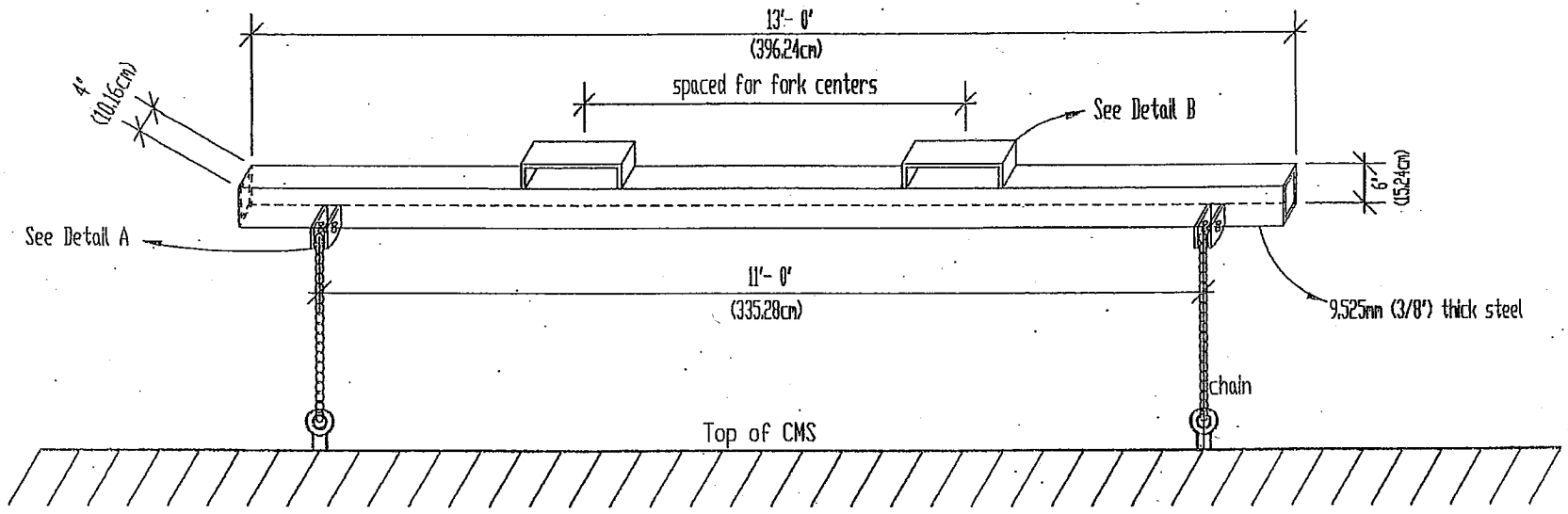

THIS BRACKET IS USED BY THE CALTRANS WAREHOUSE FOR LOADING AND UNLOADING OF MODEL 500 CMS USING A FORKLIFT. VARIATIONS MAY BE USED DEPENDING ON REQUIREMENTS OR CONSTRAINTS.

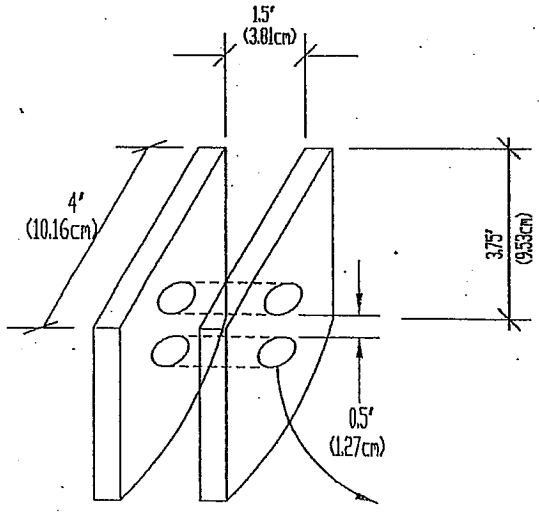

1/2' (1.27cm) thick steel

For 3/4' (1.91cm) bolts to hold chain to lift sign. Pair of holes shall be centered on panel.

DETAIL A

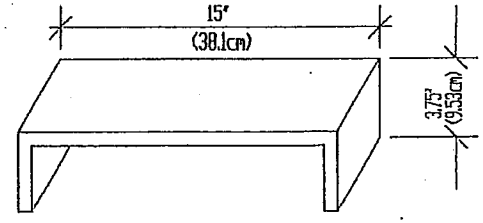

5/8' (1.59cm) thick steel

Bracket for forklift forks

DETAIL B

MODEL 500 CMS SYSTEM		
Title: CMS LIFTING BRACKET		
No Scale	FEBRUARY 2003	8-8-14

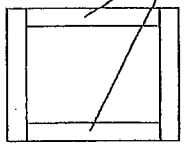

CRADLE, TOP VIEW

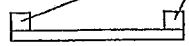

CRADLE, FRONT VIEW

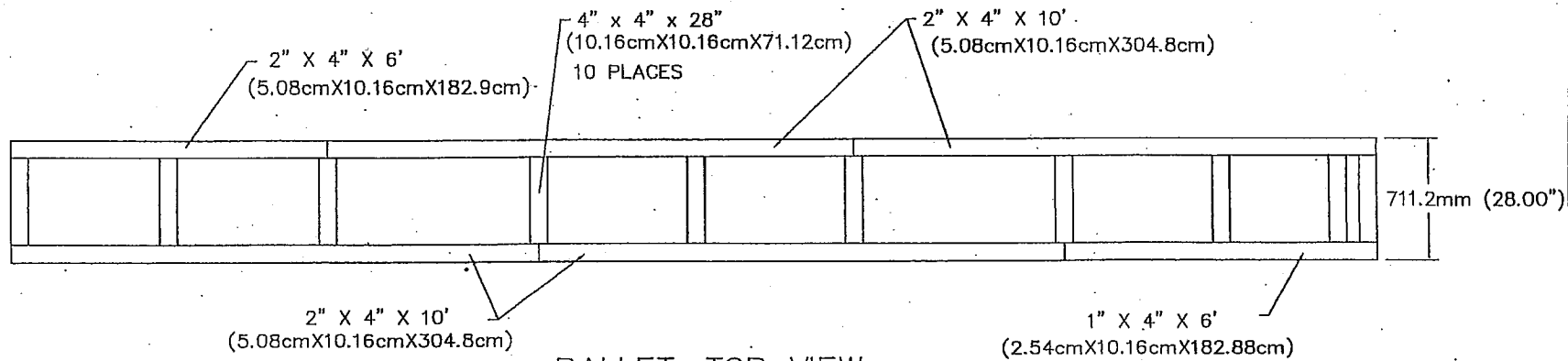

PALLET, TOP VIEW

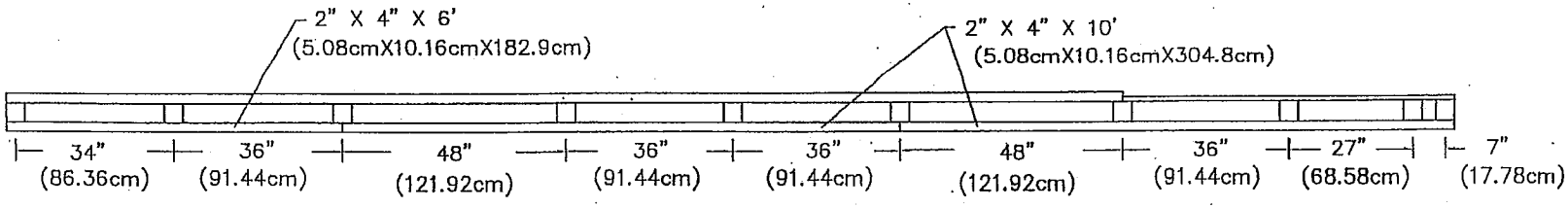

PALLET, FRONT VIEW

NOTES:

APPLY 1/2" (12.7mm) THICK RUBBER GASKET TO ALL SURFACES WHICH CONTACT THE SIGN.

MODEL 500 CMS SYSTEM		
Shipping Pallet		
Dimensions		
No Scale	FEBRUARY 2003	8-8-15

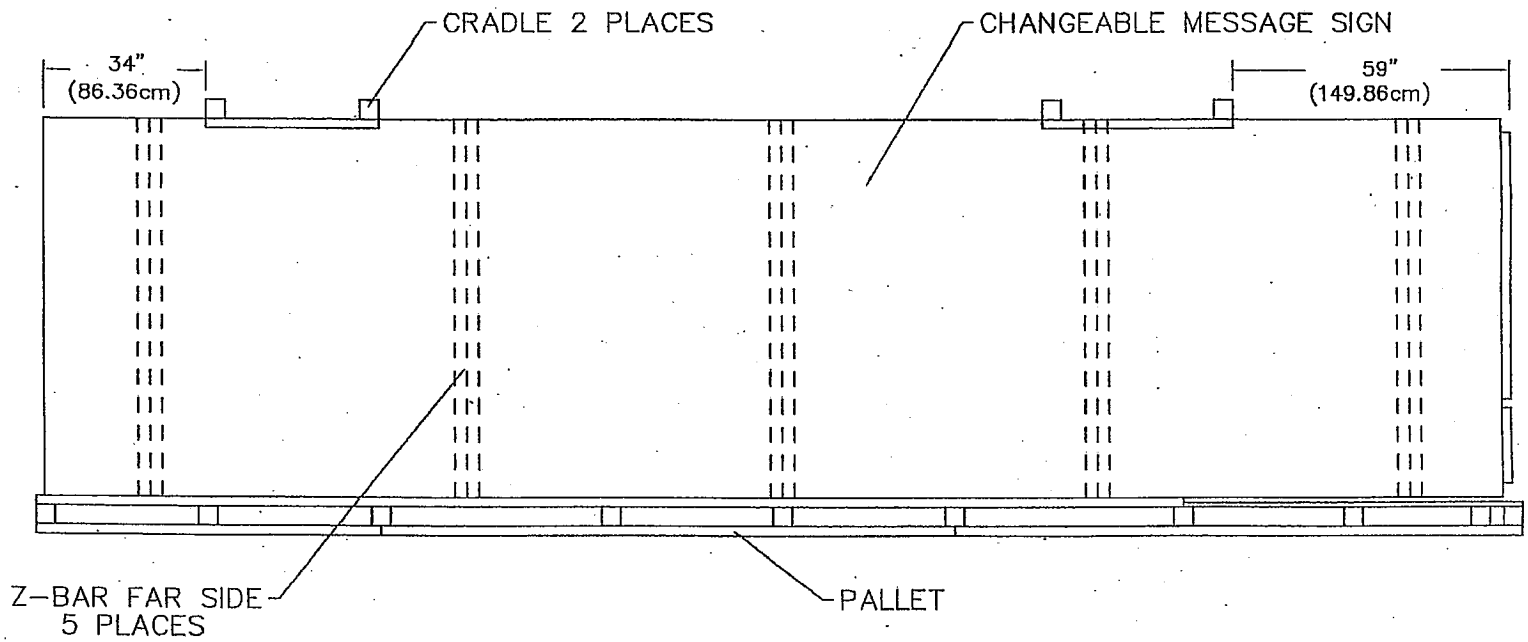

PALLETIZED CMS
FRONT VIEW

MODEL 500 CMS SYSTEM		
Palletized CMS		
Shipping Method		
No Scale	FEBRUARY 2003	8-8-16

SECTION 9

MODELS 510 CMS PLAN DETAILS

	PLAN
MODEL 510 SIGN HOUSING, FRONT AND SIDE VIEWS	8-9-1
MODEL 510 SIGN HOUSING, REAR AND TOP VIEWS	8-9-2
PIXEL MATRIX MODULE, BULB AND THUMBSCREW SPACING	8-9-3
PIXEL MATRIX MODULE, SIDE VIEW, FULL PANEL MOLDING, OPTION 1	8-9-4
PIXEL MATRIX MODULE, SIDE VIEW, FULL PANEL MOLDING, OPTION 2	8-9-5
CMS CONTROL COMPARTMENT MOUNTING DETAIL	8-9-6
CMS LIFTING BRAKET	8-9-7
SHIPPING PALLET DIMENSIONS	8-9-8

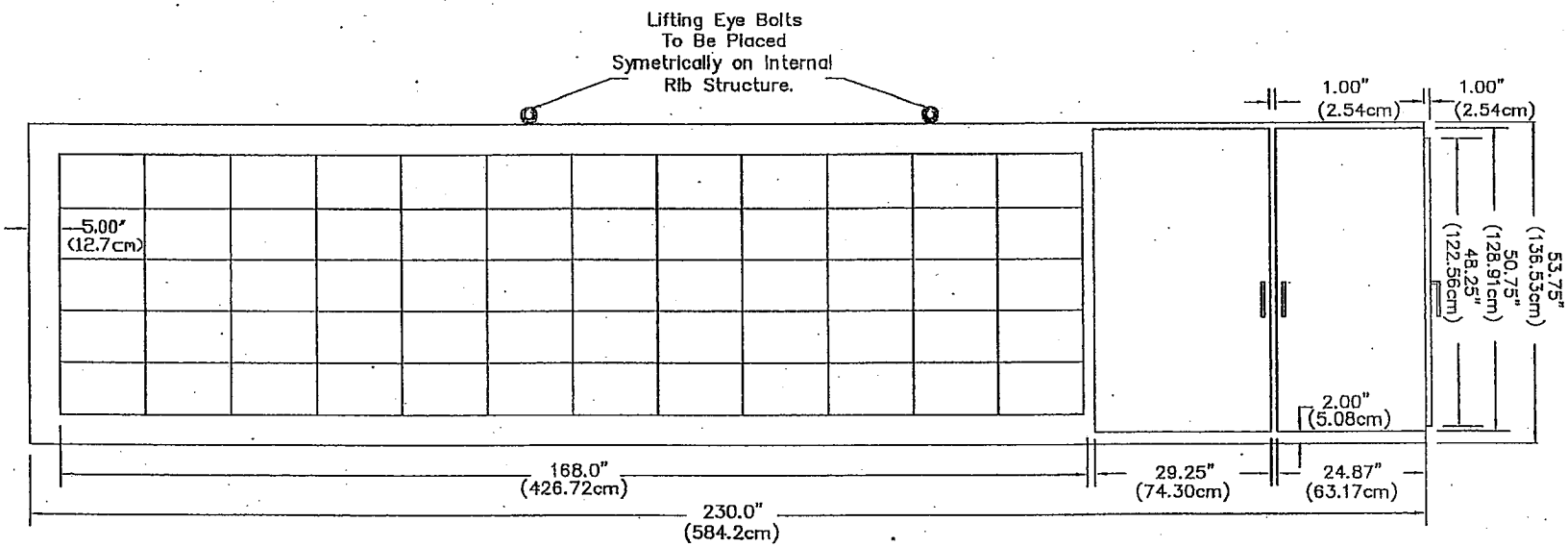

ELEVATION VIEW

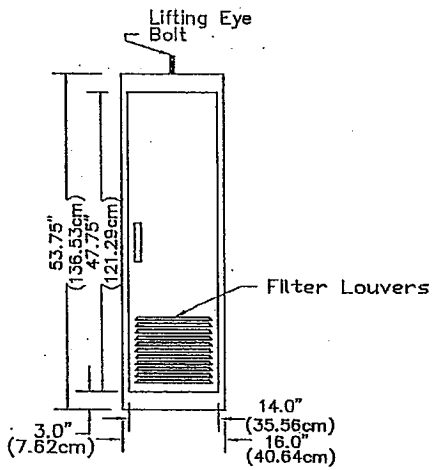

SIDE VIEW

MODEL 510 CMS SYSTEM		
Title: Sign Housing Detail		
Outside Dimension		
No Scale	FEBRUARY 2003	8-9-1

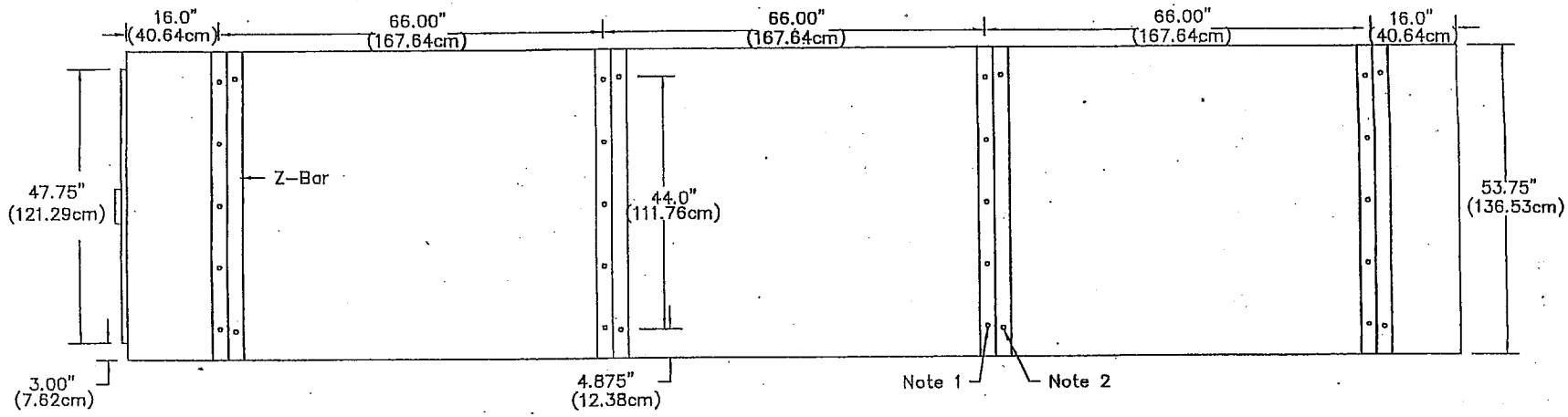

ELEVATION VIEW–REAR

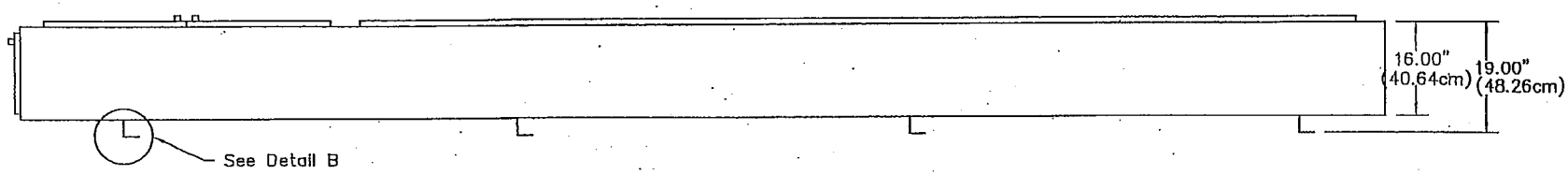

PLAN VIEW

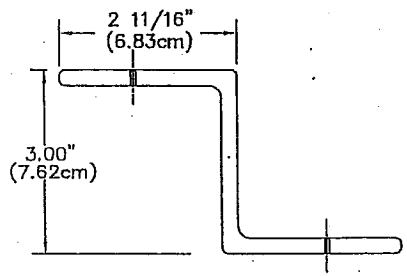

DETAIL B

NOTES/KEY:

1. Bolt supports to CMS housing, minimum 5 bolts per Z–Bar.
2. 3/4" (1.91cm) DIA holes for Mounting Bolts to CMS Test Stand.
3. Z–Bar shall be made of 0.25" (0.64cm) aluminum.

MODEL 510 CMS SYSTEM		
Title: Sign Housing Detail		
Elevation, Side Doors, End Cap, and Screens		
No Scale	FEBRUARY 2003	8-9-2

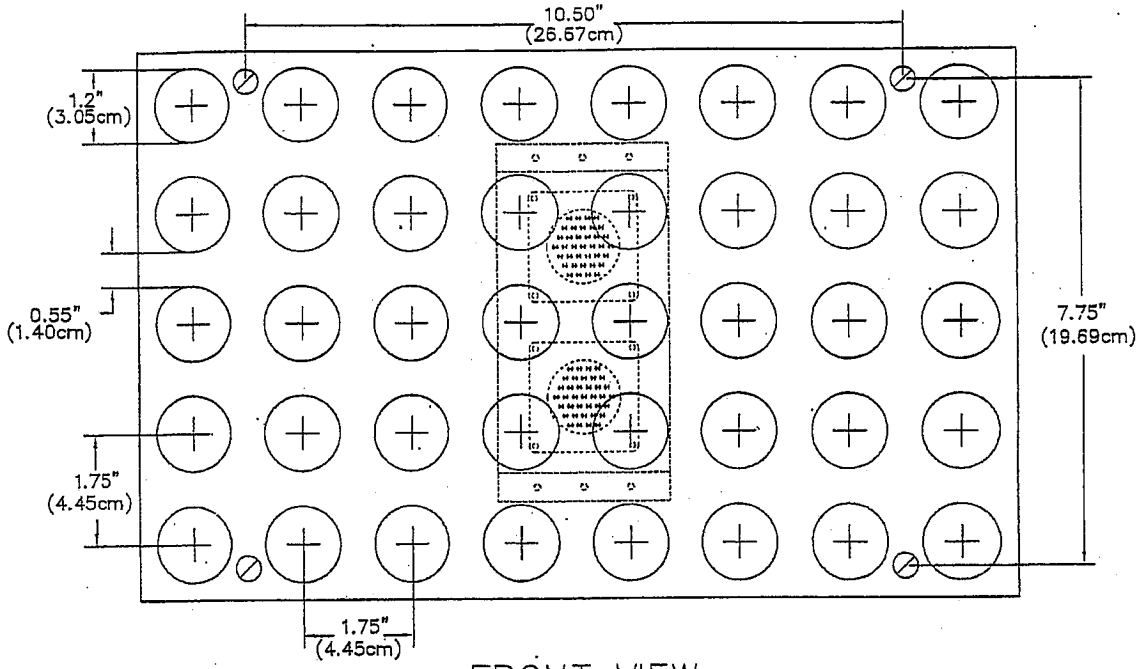

FRONT VIEW

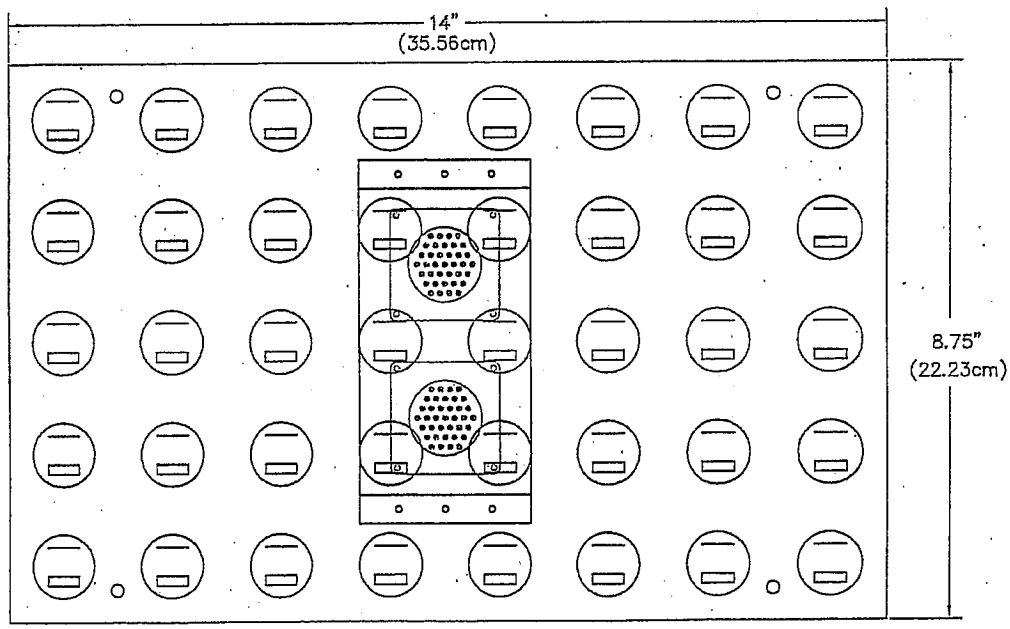

REAR VIEW

NOTES/KEY:

1. Outer dimensions include tolerance.
2. Center of pixel sockets – 40 total.
3. Captive thumbscrew device.
4. Spacing of thumbscrews within panel shall be symmetrical.
5. Connector support shall be symmetrical within the panel.
6. Pixel array shall be symmetrical within the panel.

MODEL 510 CMS SYSTEM		
Title: Pixel Matrix Module		
Bulb and thumbscrew spacing		
No Scale	FEBRUARY 2003	8-9-3

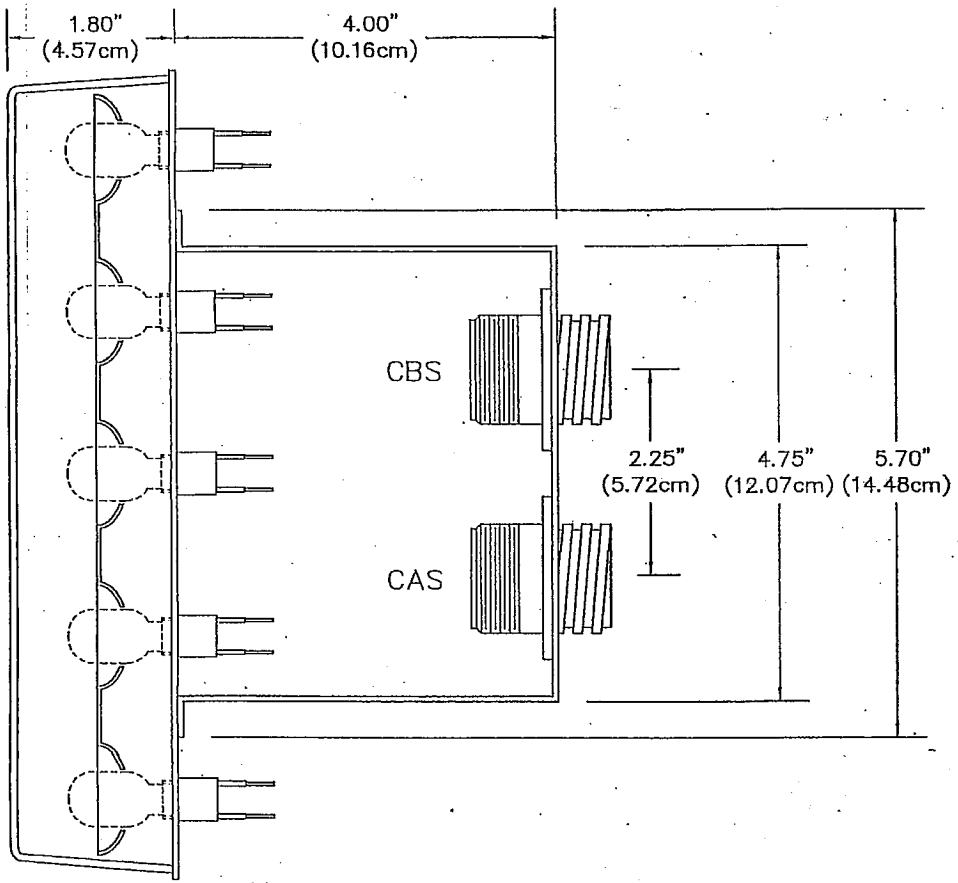

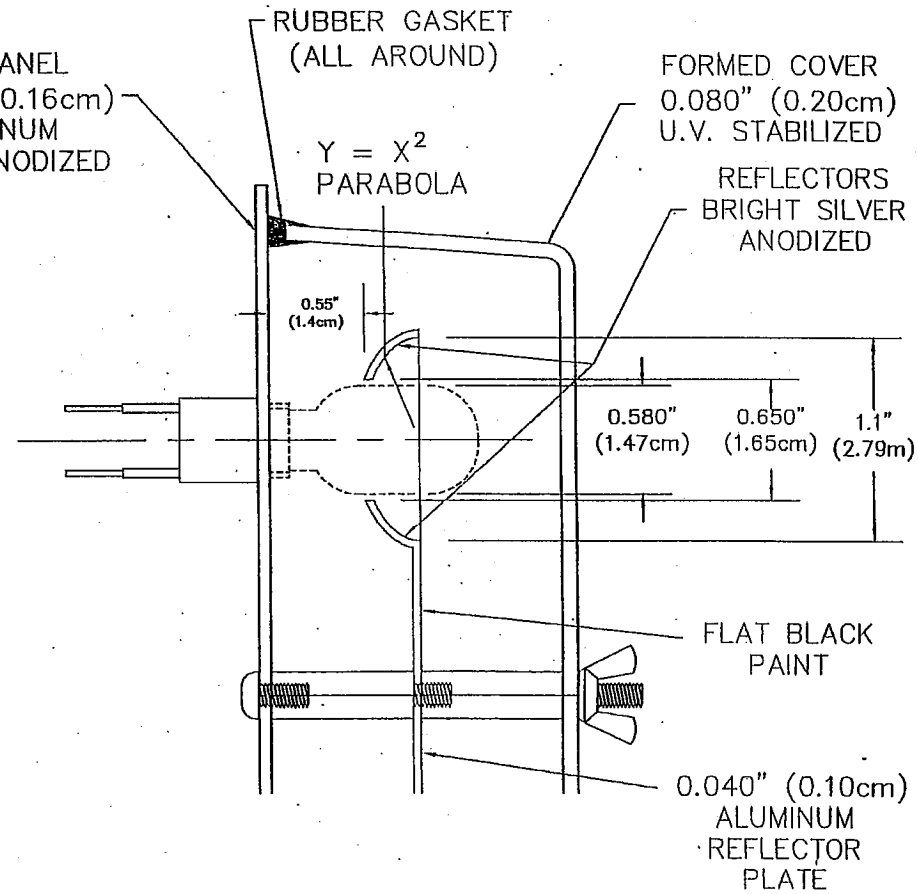

Module shall be sealed to prevent water and moisture to become in direct contact with the reflector or the lamp.

Option 1
Full Panel Molding

MODELS 510 CMS SYSTEMS		
Title: Pixel Matrix Module		
Side View		
No Scale	FEBRUARY 2003	8-9-4

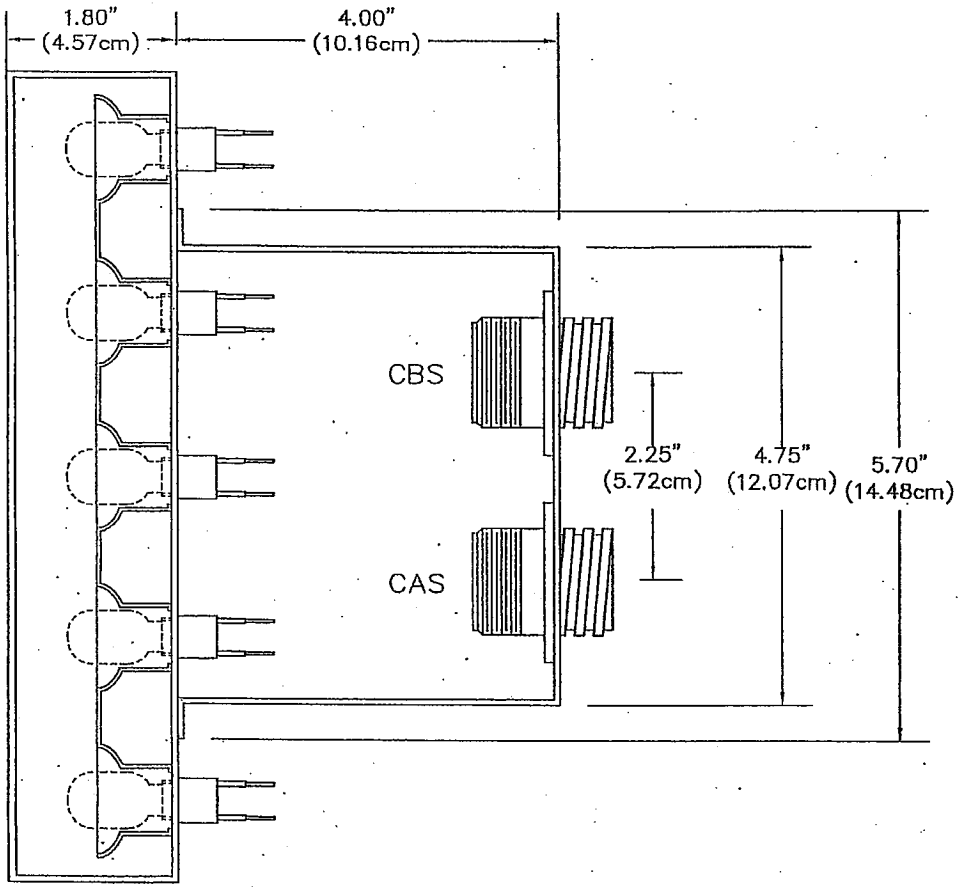

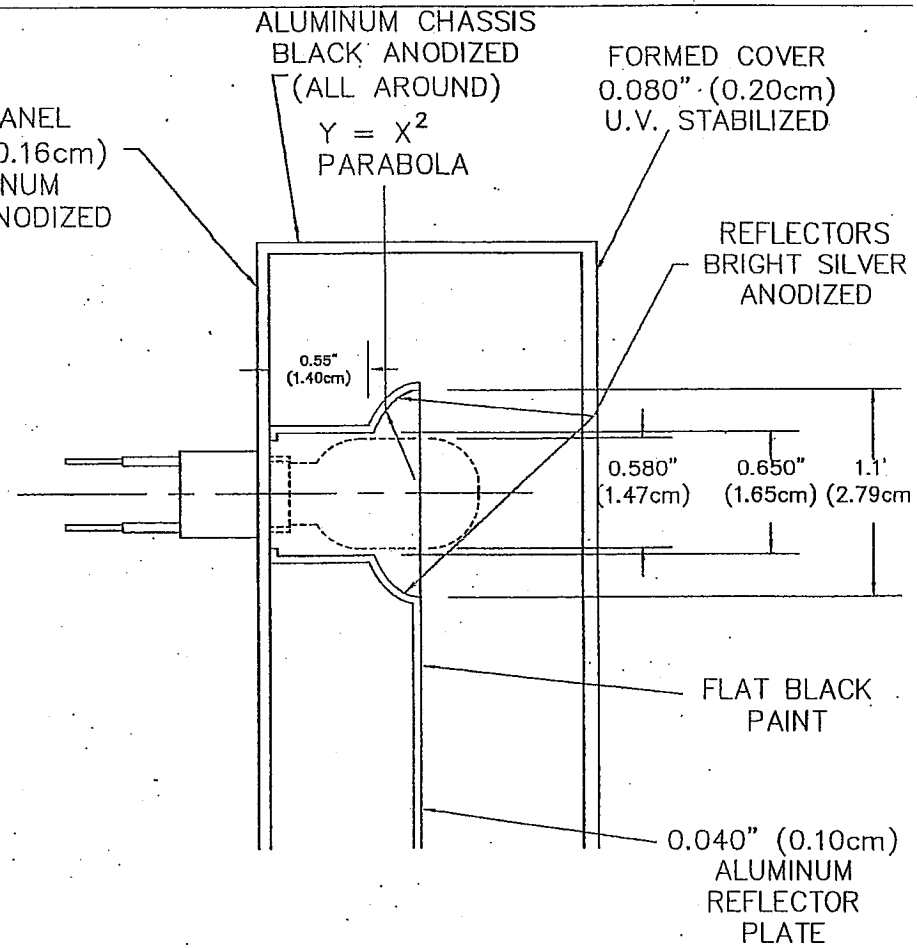

Module shall be sealed to prevent water and moisture to become in direct contact with the reflector or the lamp.

Option 2
Full Panel Molding

MODELS 510 CMS SYSTEMS		
Title: Pixel Matrix Module		
Side View		
No Scale	FEBRUARY 2003	8-9-5

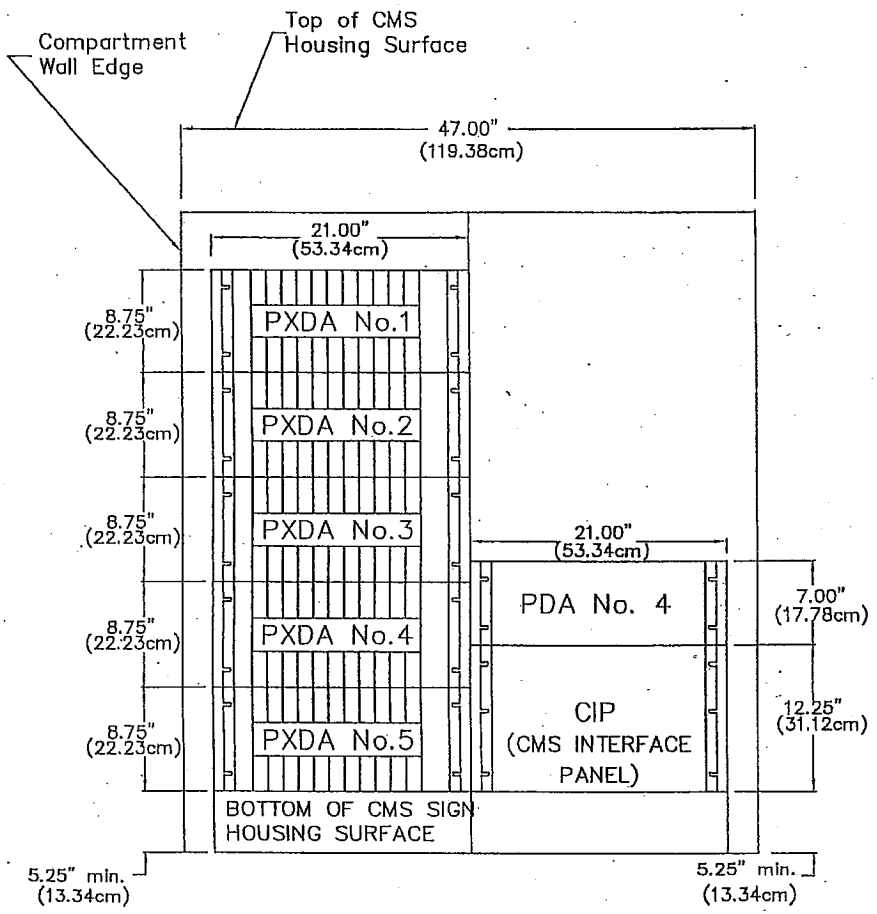

FRONT VIEW

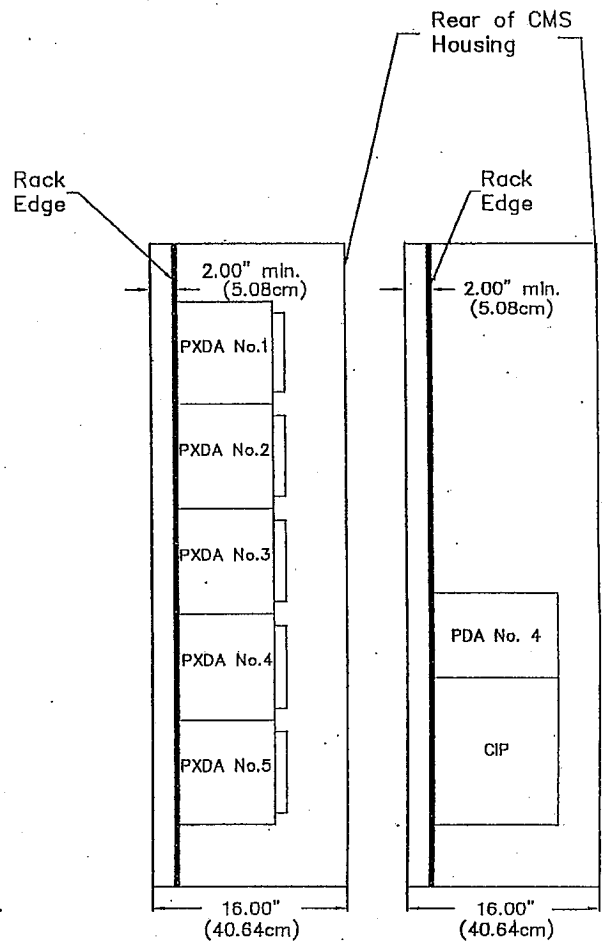

SIDE VIEW
(BOTH RACKS)

MODEL 510 CMS SYSTEM		
Title: CMS Control Compartment		
Mounting Detail		
No Scale	FEBRUARY 2003	8-9-6

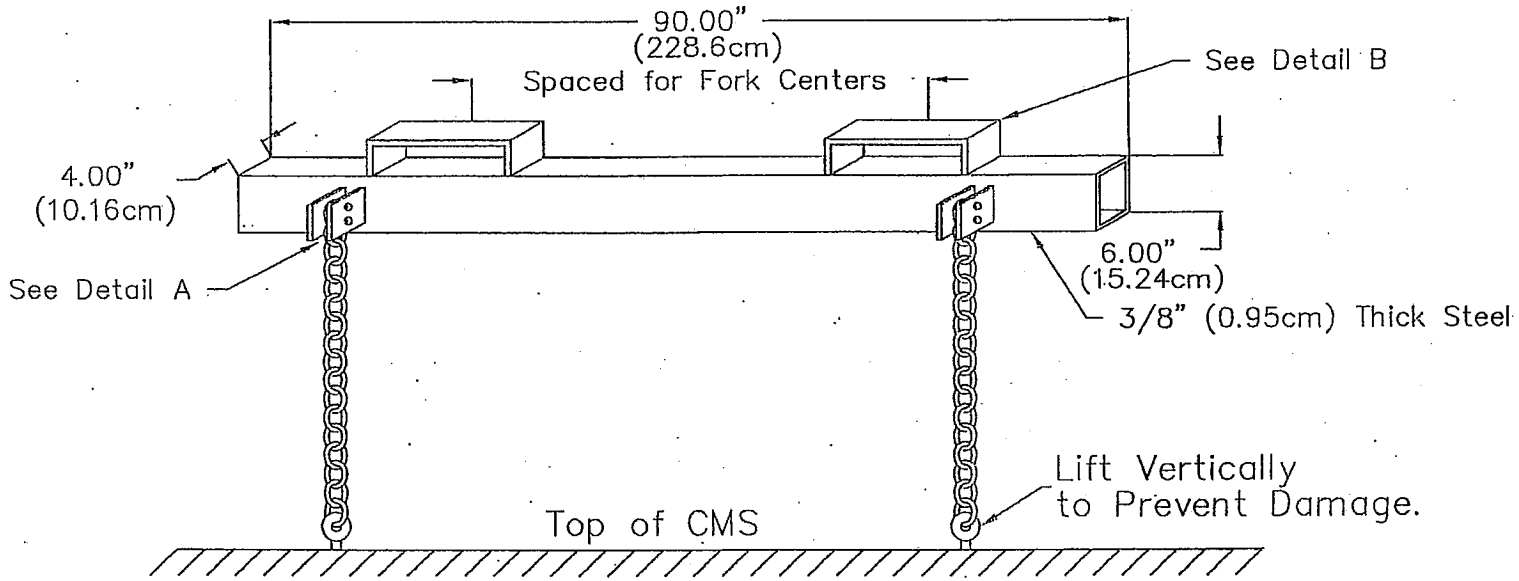

THIS BRACKET IS USED BY FOR LOADING AND UNLOADING OF MODEL 510 CMS USING A FORKLIFT. VARIATIONS MAY BE USED DEPENDING ON REQUIREMENTS OR CONSTRAINTS.

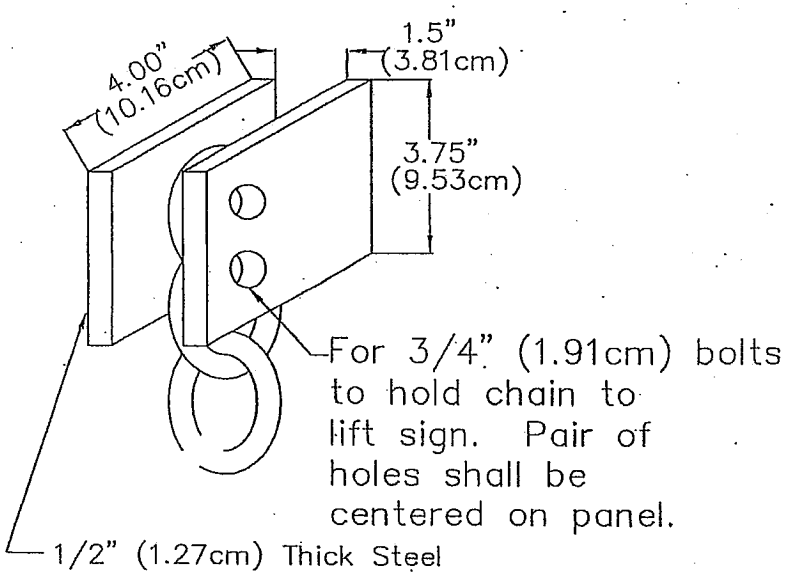

DETAIL A

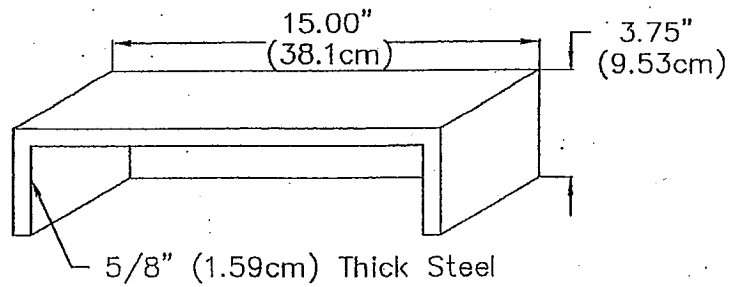

Bracket for Forklift Forks

DETAIL B

MODEL 510 CMS SYSTEM		
Title: CMS Lifting Bracket		
No Scale	FEBRUARY 2003	8-9-7

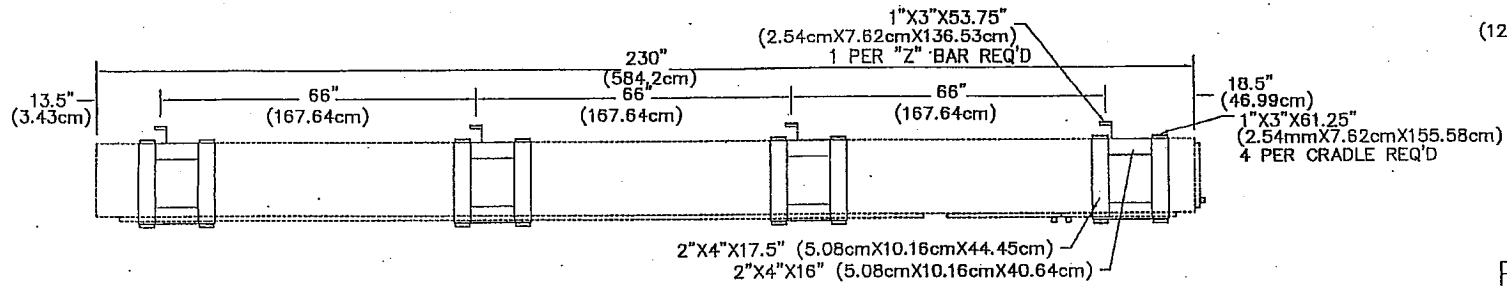

CRADLE/SIGN, TOP VIEW

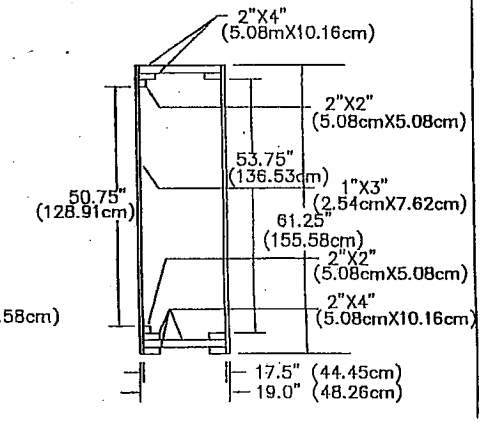

PALLET, SIDE VIEW

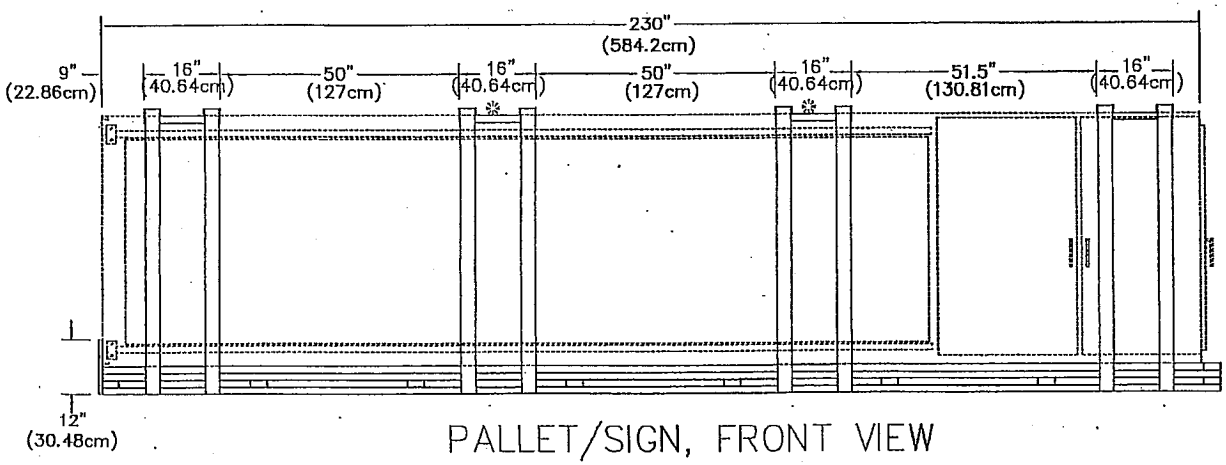

PALLET/SIGN, FRONT VIEW

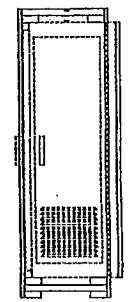

PALLET/SIGN, SIDE VIEW

NOTES:

APPLY 0.125" (0.32cm) THICK WHITE MICRO FOAM GASKET TO ALL SURFACES WHICH CONTACT THE SIGN.

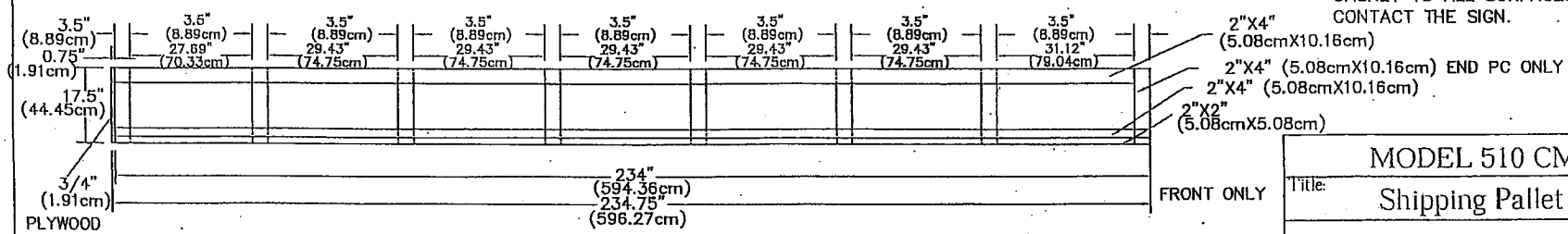

PALLET, TOP VIEW

MODEL 510 CMS SYSTEM		
Title: Shipping Pallet Dimensions		
No Scale	FEBRUARY 2003	8-9-8

SECTION 10

MODELS 520 CMS PLAN DETAILS

	PLAN
MODEL 520 SIGN HOUSING, FRONT AND SIDE VIEWS	8-10-1
MODEL 520 SIGN HOUSING, REAR AND TOP VIEWS	8-10-2
TRANSFORMERS TO CIP WIRING DETAIL	8-10-3
CMS CONTROL COMPARTMENT MOUNTING DETAIL	8-10-4
PIXEL MATRIX MODULE, FRONT VIEW	8-10-5
PIXEL MATRIX MODULE, REAR VIEW	8-10-6
PIXEL MATRIX MODULE, SIDE VIEW, FUL PANEL MOLDING, OPTION 1	8-10-7
PIXEL MATRIX MODULE, SIDE VIEW, FUL PANEL MOLDING, OPTION 2	8-10-8
CMS SHIPPING PALLET	8-10-9

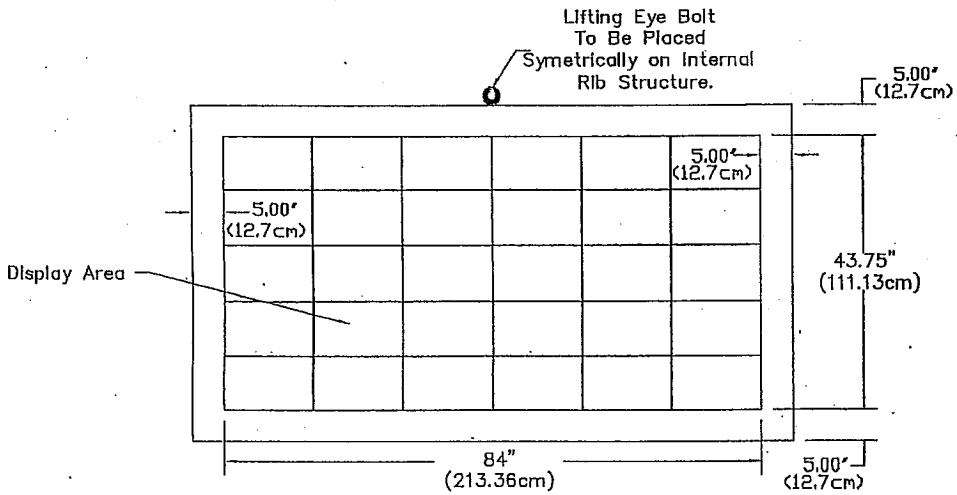

ELEVATION VIEW

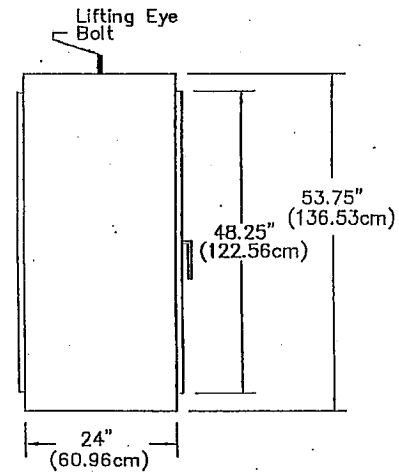

SIDE VIEW

MODEL 520 CMS SYSTEM		
Title: Sign Housing Detail		
Front and Side Views		
No Scale	FEBRUARY 2003	8-10-1

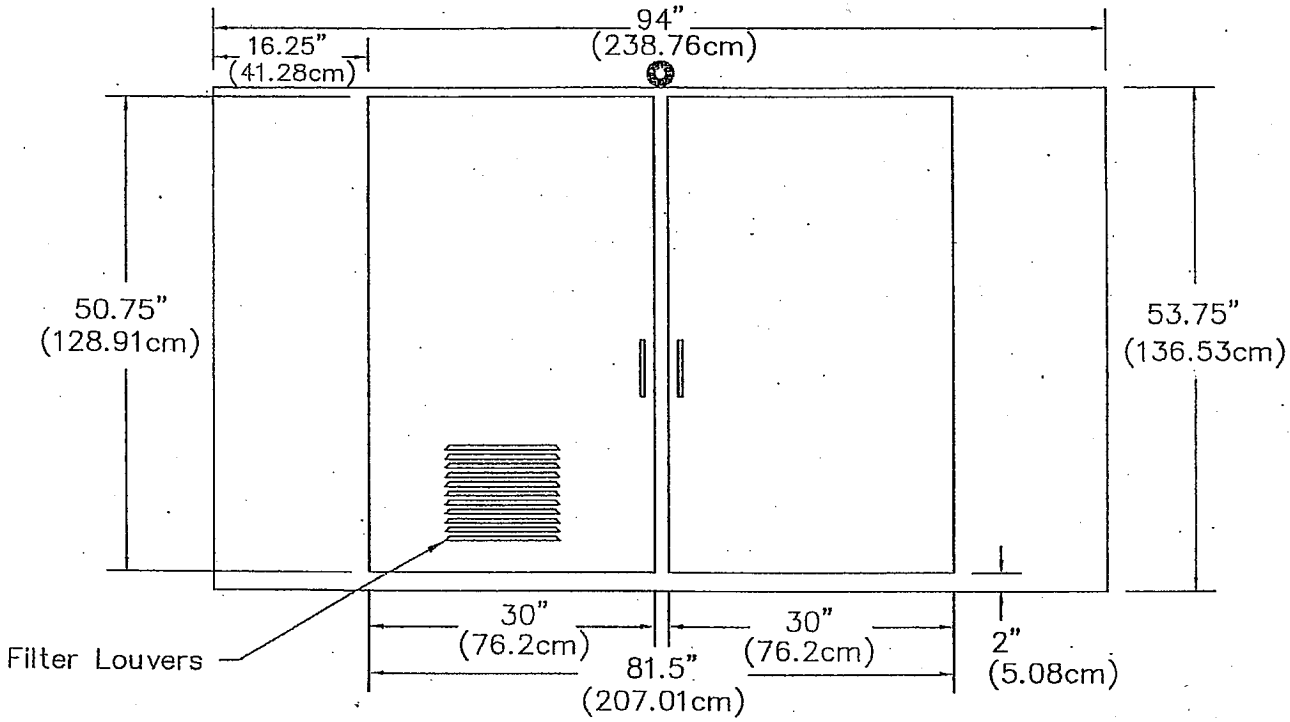

REAR VIEW

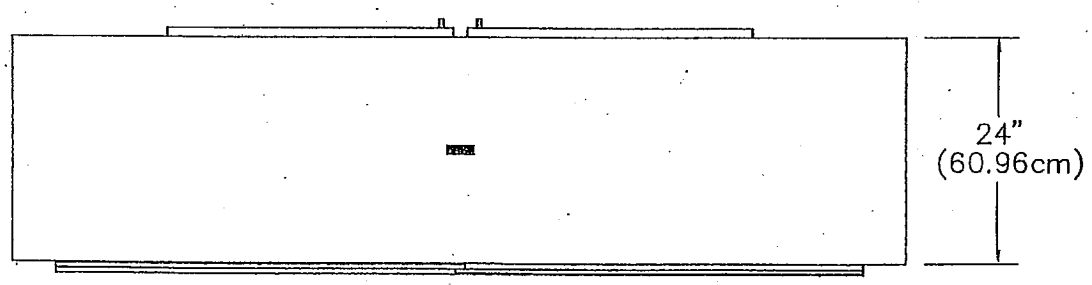

TOP VIEW

MODEL 520 CMS SYSTEM		
Title: Sign Housing Detail		
Rear and Top Views		
No Scale	FEBRUARY 2003	8-10-2

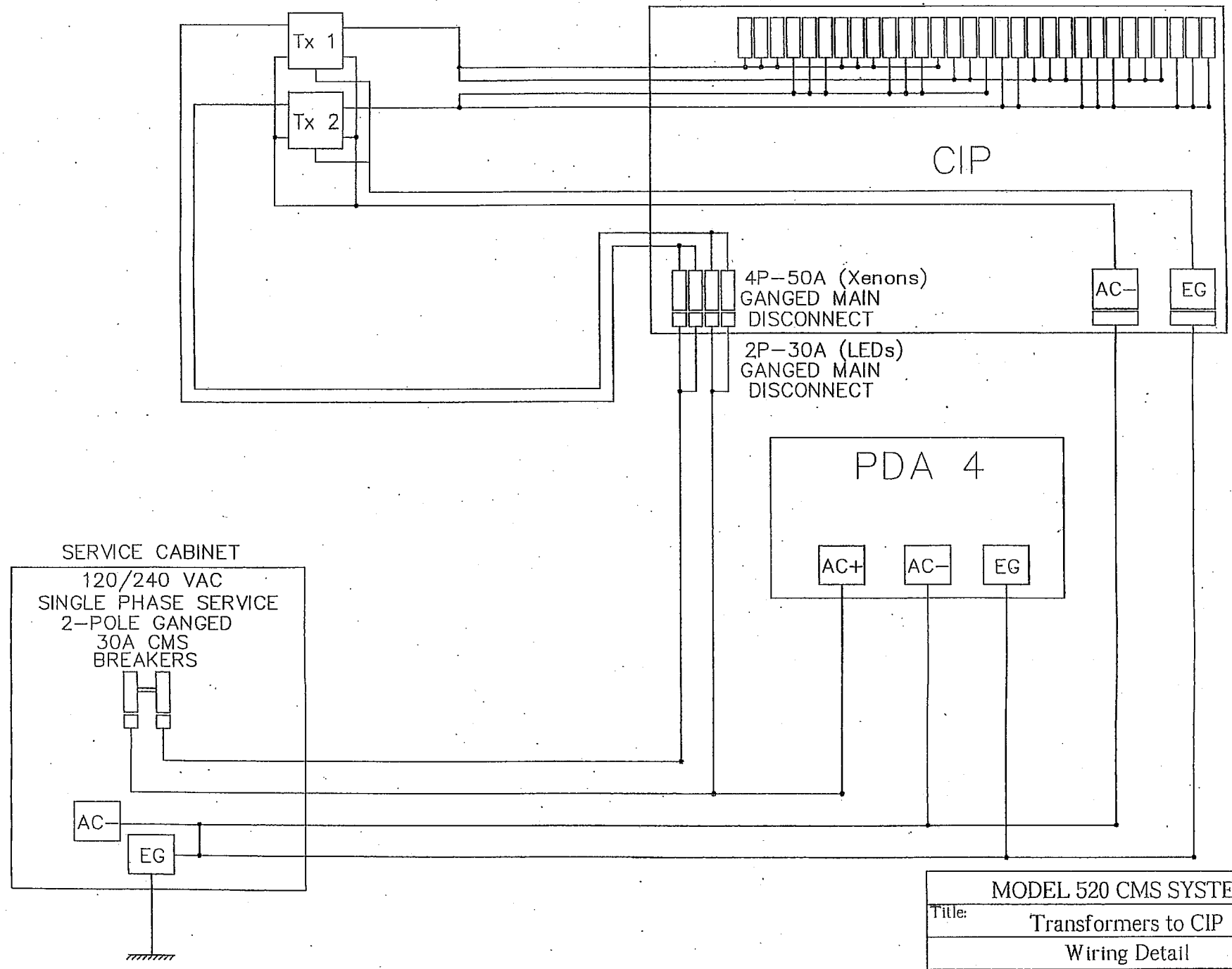

MODEL 520 CMS SYSTEM		
Title: Transformers to CIP		
Wiring Detail		
No Scale	FEBRUARY 2003	8-10-3

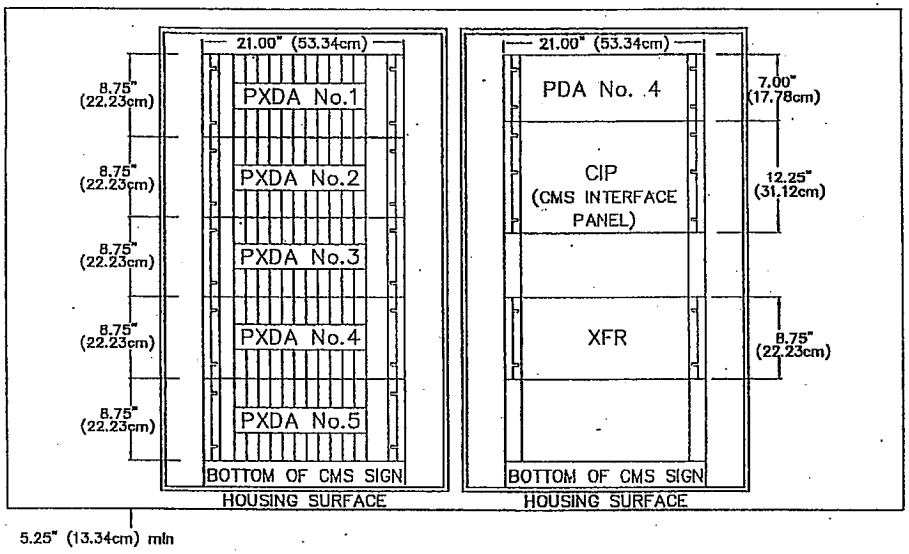

FRONT VIEW

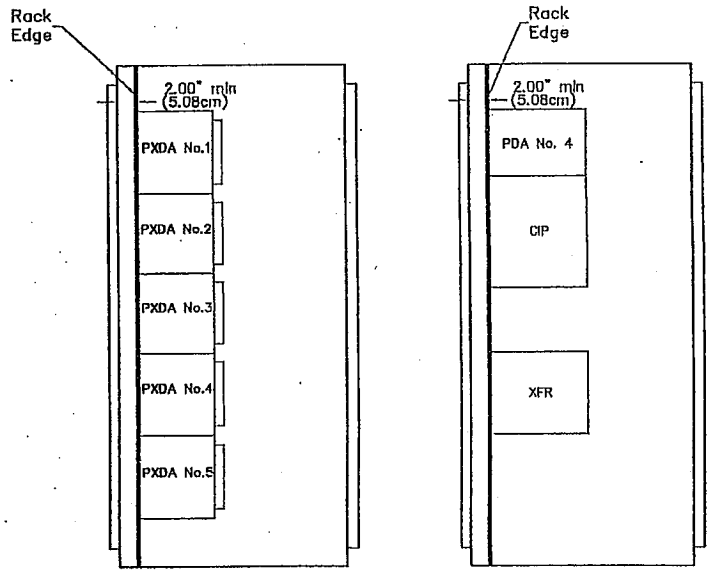

SIDE VIEW
(BOTH RACKS)

MODEL 520 CMS SYSTEM		
Title: CMS Control Compartment		
Mounting Detail		
No Scale	FEBRUARY 2003	8-10-4

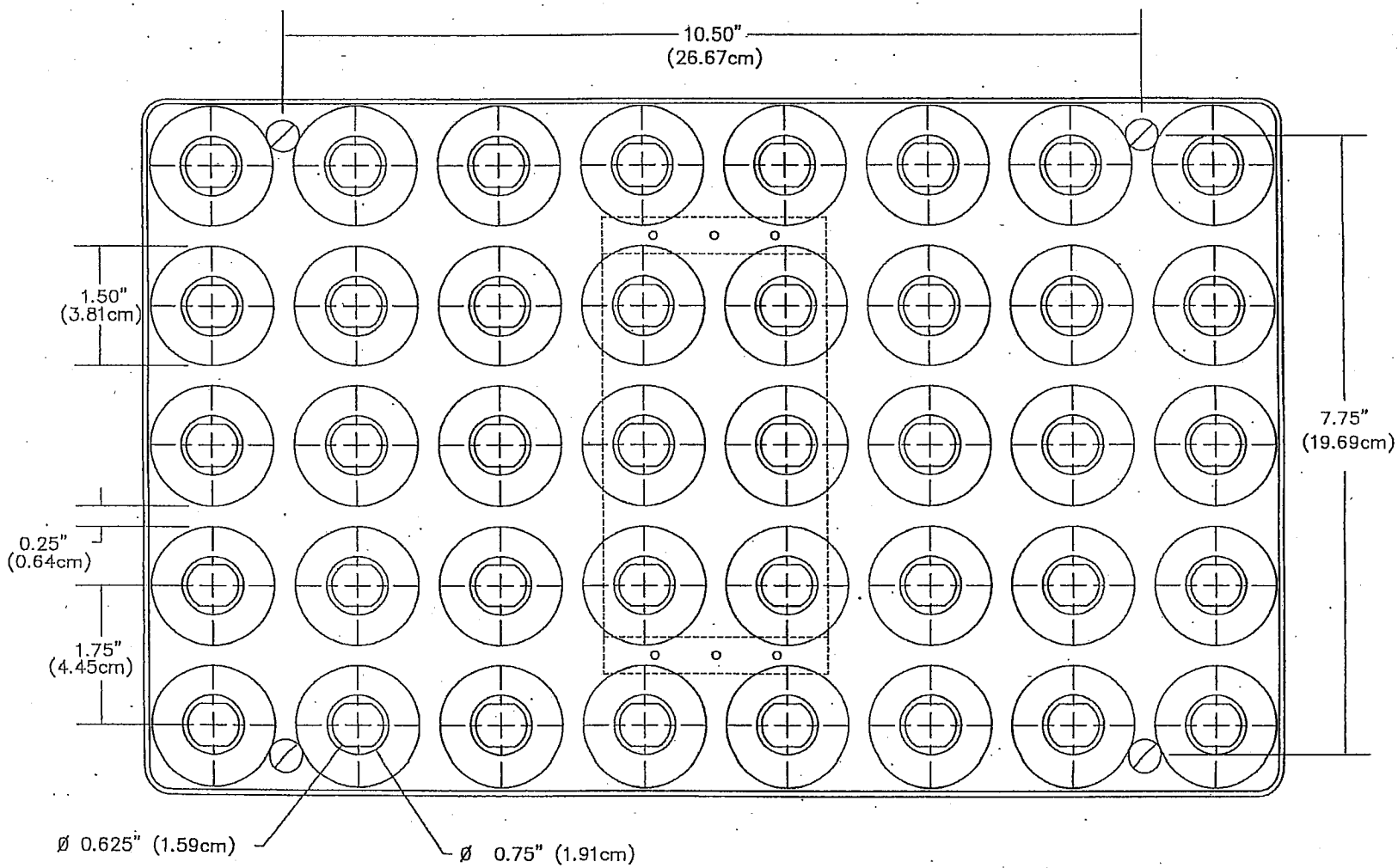

MODEL 520 CMS SYSTEM		
Title: Pixel Matrix Module		
Front View		
No Scale	FEBRUARY 2003	8-10-5

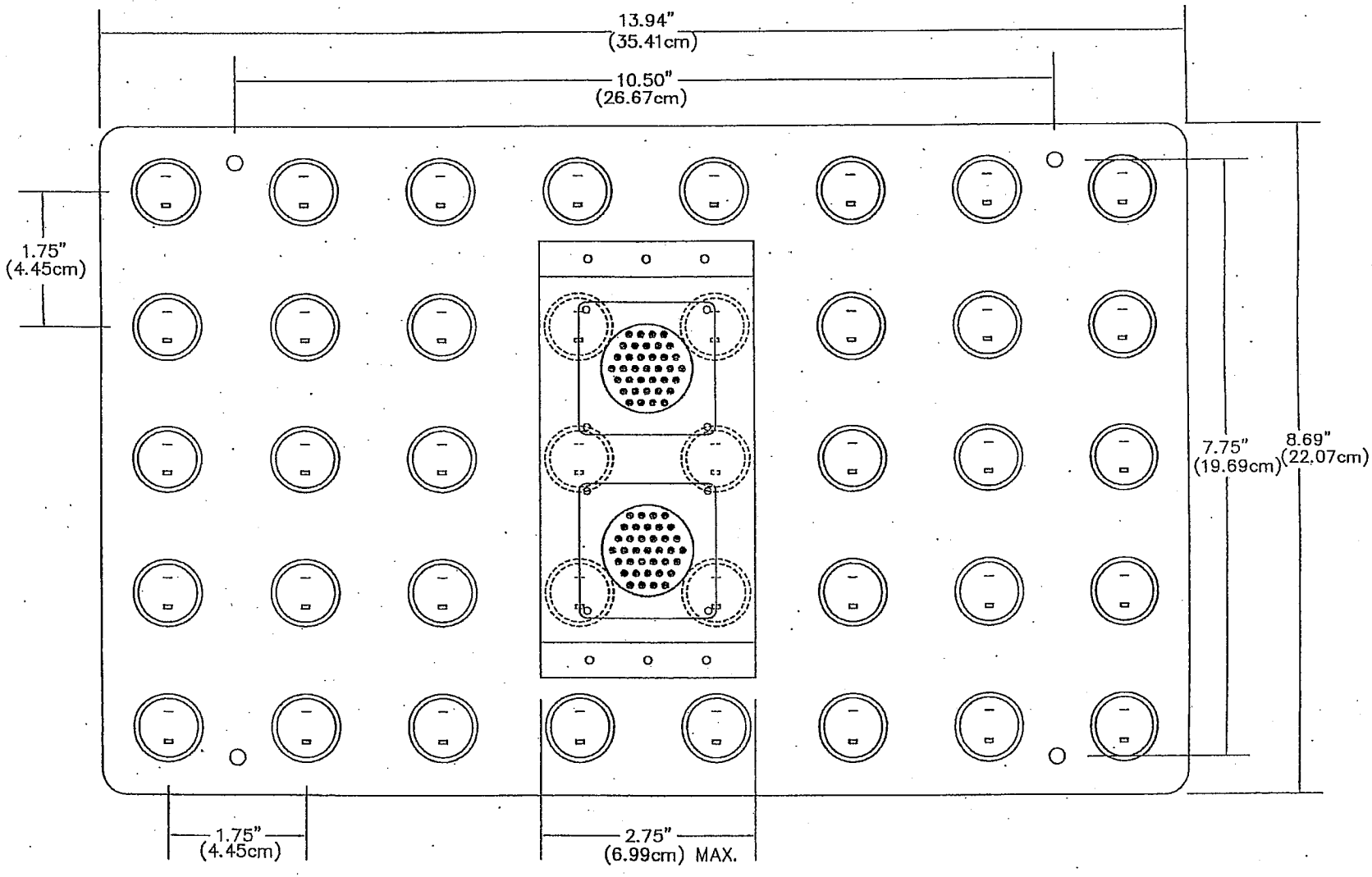

MODEL 520 CMS SYSTEM		
Title: Pixel Matrix Module		
Rear View		
No Scale	FEBRUARY 2003	8-10-6

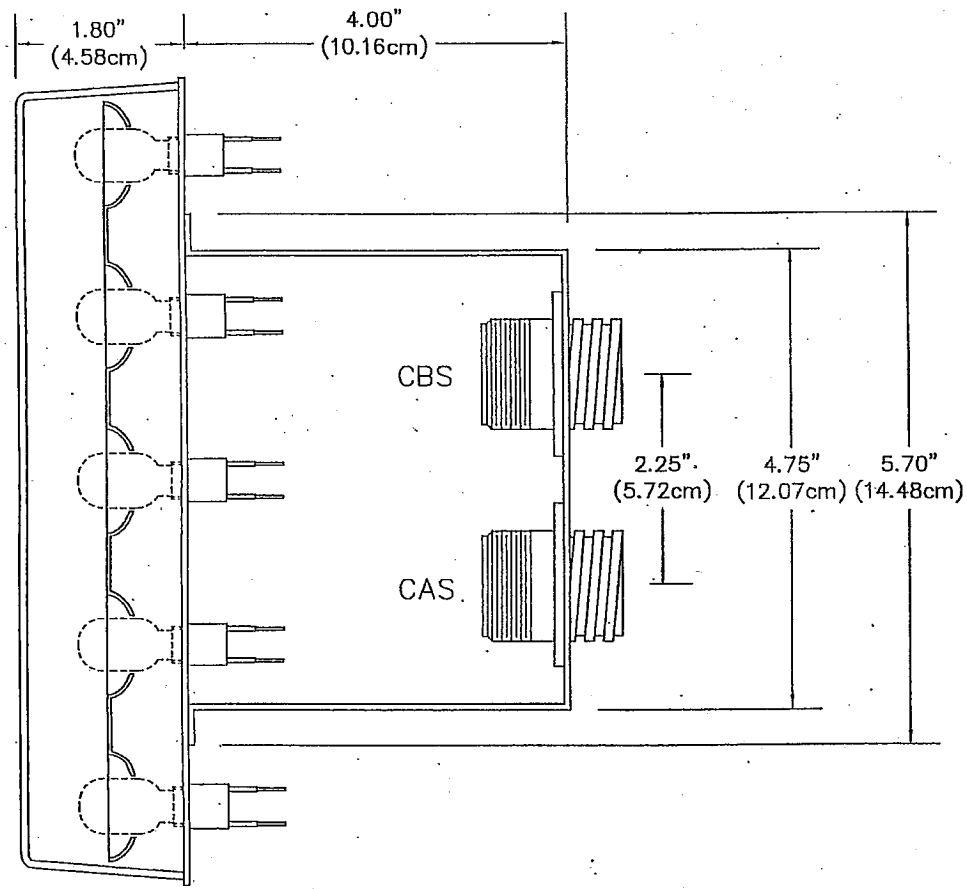

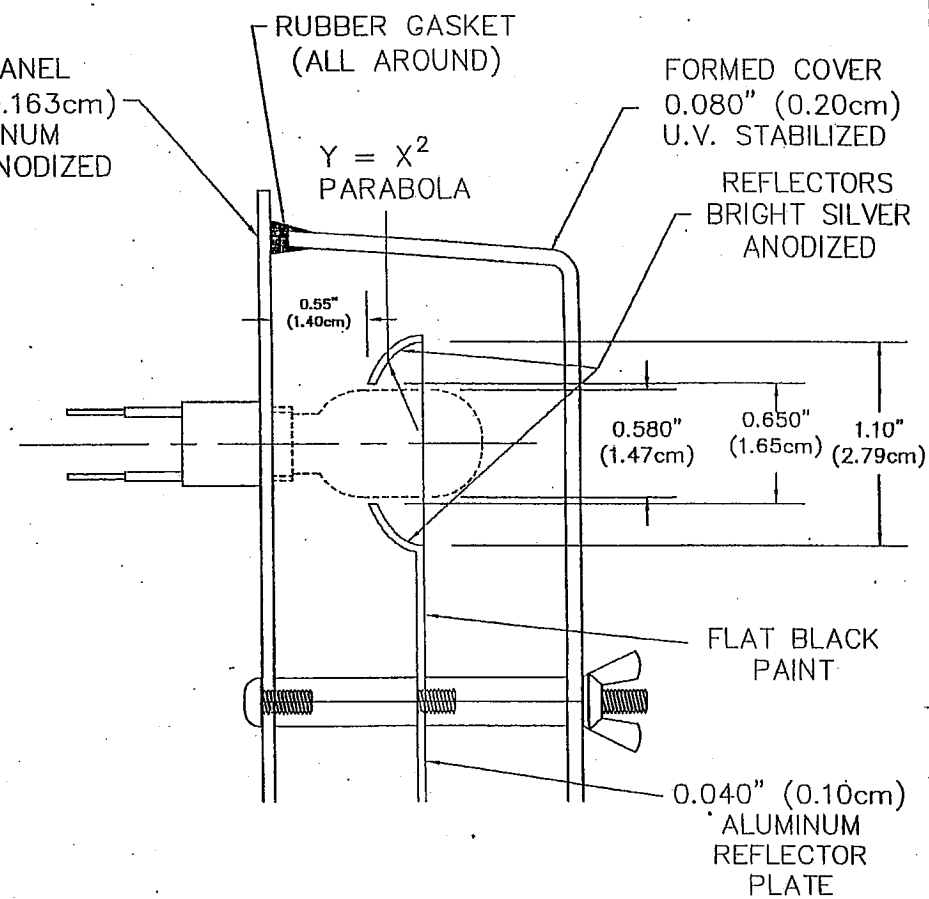

Module shall be sealed to prevent water and moisture to become in direct contact with the reflector or the lamp.

Option 1
Full Panel Molding

MODELS 520 CMS SYSTEMS		
Title: Pixel Matrix Module		
Side View		
No Scale	FEBRUARY 2003	8-10-7

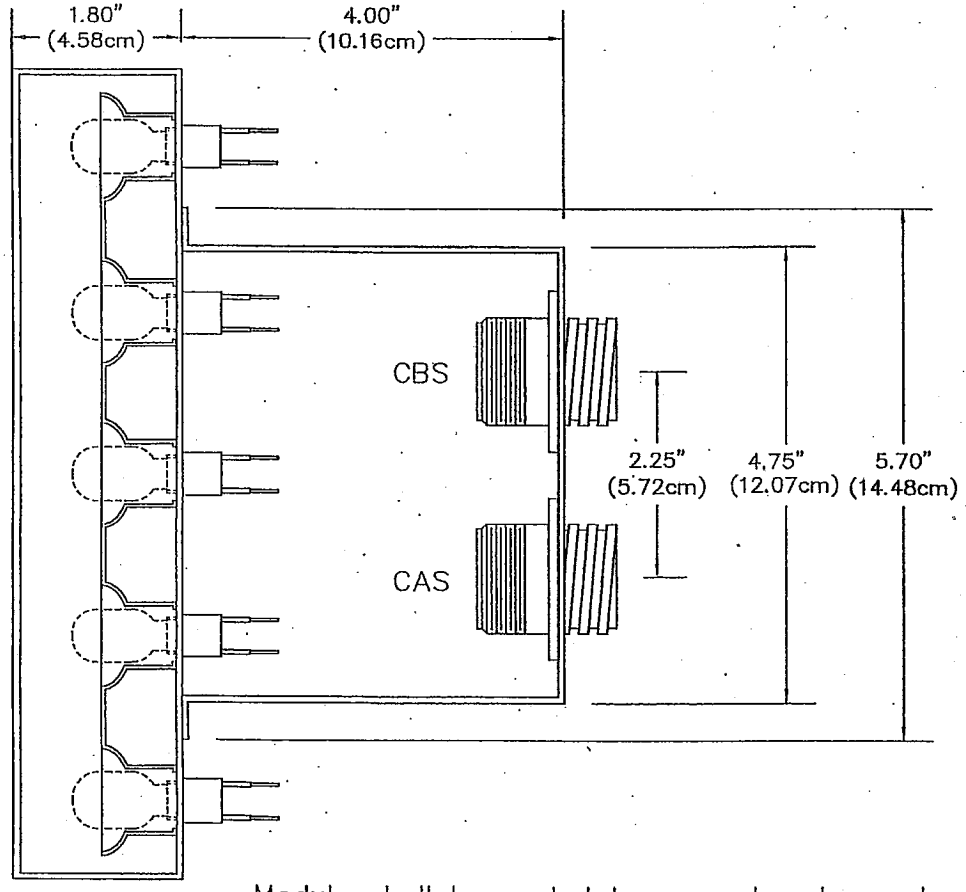

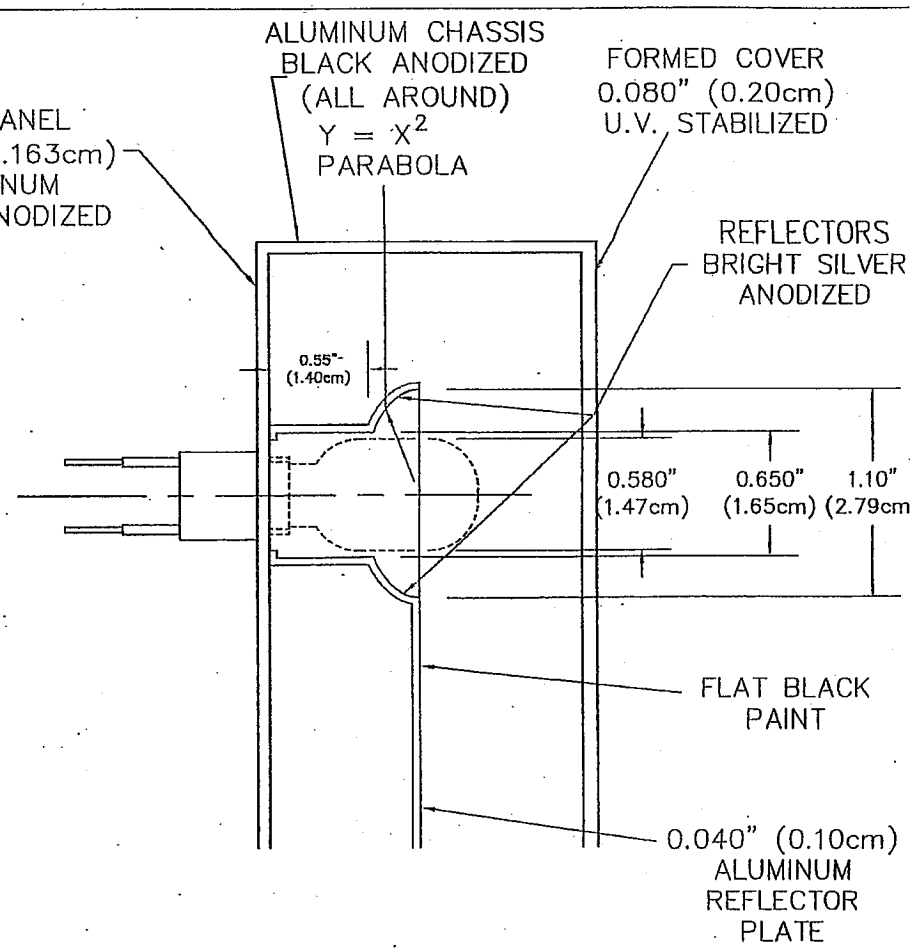

Module shall be sealed to prevent water and moisture to become in direct contact with the reflector or the lamp.

Option 2
Full Panel Molding

MODELS 520 CMS SYSTEMS		
Title: Pixel Matrix Module		
Side View		
No Scale	FEBRUARY 2003	8-10-8

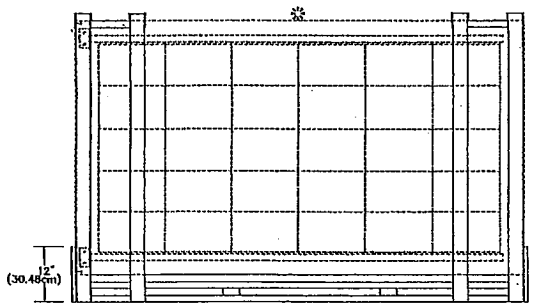

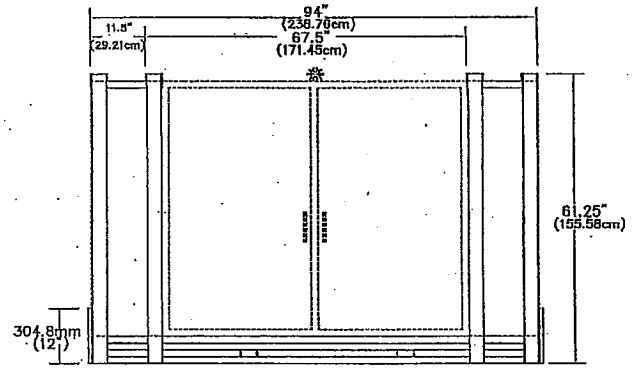

PALLET/SIGN, FRONT & REAR VIEW

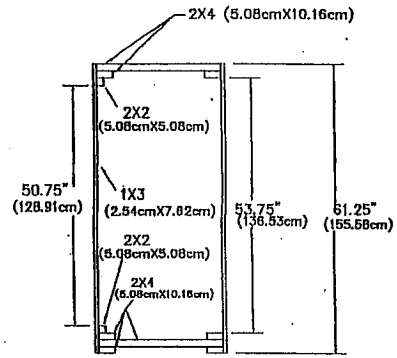

PALLET, SIDE VIEW

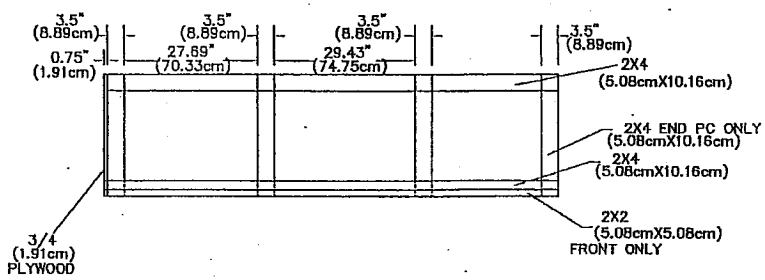

PALLET, TOP VIEW

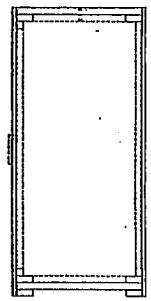

PALLET/SIGN, SIDE VIEW

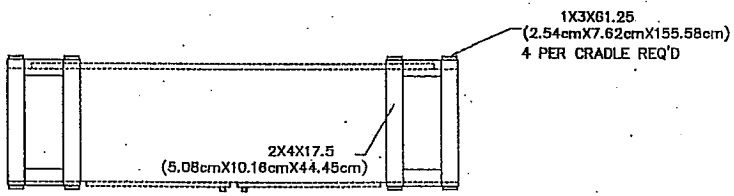

CRADLE/SIGN, TOP VIEW

NOTES:

APPLY 0.125" (0.32cm) THICK WHITE MICRO FOAM GASKET TO ALL SURFACES WHICH CONTACT THE SIGN.

MODEL 520 CMS SYSTEM		
Title: Shipping Pallet Dimensions		
No Scale	FEBRUARY 2003	8-10-9

Caltrans

TRANSPORTATION ELECTRICAL EQUIPMENT SPECIFICATIONS

TEES

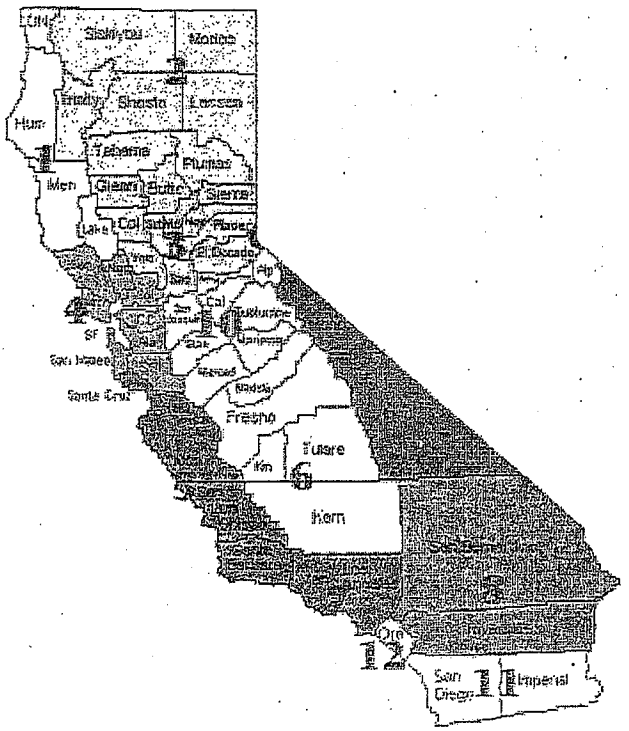

AUGUST 16, 2002

STATE OF CALIFORNIA
DEPARTMENT OF TRANSPORTATION

GRAY DAVIS
Governor

MARIA CONTRERAS-SWEET
Secretary
Business, Transportation & Housing Agency

JEFF MORALES
Director
Department of Transportation

RANDELL H. IWASAKI
Deputy Director
Maintenance and Operations

JOE HECKER
Program Manager
Traffic Operations

MARTHA V. STYER
Chief, ITS Development and Support

TABLE OF CONTENTS

		PAGE
Chapter 1	General Specifications	1-1
Chapter 2	Specifications for Models 170E Enhanced Controller Unit and Associated Modules	2-1
Chapter 3	170 Models 200, 204, 206, 208, 210 and ITS Models 212, 214, 216, 218 Units	3-1
Chapter 4	Specifications for CCTV, HAR and Environment Equipment (Future)	4-1
Chapter 5	Specifications for Detector Sensor Units, Elements and Isolator Models	5-1
	222E Two-Channel Loop Detector Sensor Unit	
	224E Four-Channel Loop Detector Sensor Unit	
	231E Magnetic Detector Sensor Element	
	232E Two-Channel Magnetic Detector Sensor Unit	
	242 Two-Channel DC Isolator	
	252 Two-Channel AC Isolator	
Chapter 6	Specifications for Type 170 Cabinet Models and Auxiliary Units (Future)	6-1
Chapter 7	Specifications for ITS Cabinets Assembly	7-1
Chapter 8	Specifications for Changeable Message Sign System Models 500, 510 and 520 (Future)	8-1
Chapter 9	Specifications for Model 2070 Controller Unit	9-1
Chapter 10	Specifications for Model 2070 Peripheral	10-1
Chapter 11	Specifications for Model 2070N Controller Unit	11-1

CHAPTER 1

GENERAL SPECIFICATIONS FOR ELECTRICAL EQUIPMENT

TABLE OF CONTENTS

		PAGE
SECTION 1	GLOSSARY	1-1-1
SECTION 2	GENERAL	1-2-1
SECTION 3	COMPONENTS	1-3-1
SECTION 4	MECHANICAL	1-4-1
SECTION 5	ENGINEERING	1-5-1
SECTION 6	PRINTED CIRCUIT BOARD	1-6-1
SECTION 7	QUALITY CONTROL	1-7-1
SECTION 8	ELECTRICAL, ENVIRONMENTAL AND TESTING REQUIREMENTS	1-8-1
SECTION 9	CHAPTER DETAILS	1-9

CHAPTER 1 SECTION 1

GLOSSARY

1.1 Wherever the following terms or abbreviations are used, the intent and meaning shall be interpreted as follows:

A	-	Ampere
AASHTO	-	American Association of State Highway and Transportation Officials
AC	-	Alternating Current
AC+	-	120 Volts AC, 60 hertz ungrounded power source
AC-	-	120 Volts AC, 60 hertz grounded return to the power source
AGENCY	-	Purchasing Government Agency
ANSI	-	American National Standard Institute
API	-	Application Program Interface
ASCII	-	American Standard Code for Information Interchange
Assembly	-	A complete machine, structure or unit of a machine that was manufactured by fitting together parts and/or modules
ASTM	-	American Society for Testing and Materials
ATC	-	Advanced Transportation Controller
AWG	-	American Wire Gage
bps	-	bits per second
C	-	Celsius
C Language	-	The ANSI C Programming Language
Cabinet	-	An outdoor enclosure generally housing the controller unit and associated equipment

Certificate of Compliance	-	A certificate signed by the manufacturer of the material or the manufacturer of assembled materials stating that the materials involved comply in all respects with the requirements of the specifications
Channel	-	An information path from a discrete input to a discrete output
CIA	-	CMS Controller Isolation Assembly
CIP	-	CMS Interface Panel
CMOS	-	Complementary Metal Oxide Semiconductor
CMS	-	Changeable Message Sign
CMS SYSTEM	-	Includes Controller Unit, Model 334C Cabinet, Interconnect Harnesses, CMS and other associated equipment required to operate the system.
Component	-	Any electrical or electronic device
Contractor	-	The person or persons, manufacturer, firm, partnership, corporation, vendor or combination thereof, who have entered into a contract with the AGENCY, as party(s) of the second part or legal representative
Controller Unit	-	That portion of the controller assembly devoted to the operational control of the logic decisions programmed into the assembly
CPDA	-	CMS Pixel Driver Assembly
CPDM	-	CMS Pixel Driver Module
CPMM	-	CMS Pixel Matrix Module
CPU	-	Central Processing Unit
CR	-	ACIA Control Register
CRC	-	Cyclic Redundancy Check
DAT Program	-	The AGENCYs Diagnostic and Acceptance Test Program
Daughter Board	-	(from TechEncyclopedia) A Printed Circuit Board that plugs into another Printed Circuit Board to augment its capabilities
dB	-	Decibel

dBa	-	Decibels above reference noise, adjusted
DC	-	Direct Current
DIN	-	Deutsche Industrie Norm
DMA	-	Direct Memory Access
DMS	-	Dynamic Message Sign
DTA	-	Down Time Accumulator
DTE	-	Data Terminal Equipment
DTR	-	Data Terminal Ready
EG	-	Equipment Ground
EIA	-	Electronic Industries Association
EMI	-	Electro Magnetic Interference
Engineer	-	The AGENCY director, acting either directly or through properly authorized agents, such agents acting within the scope of the particular duties delegated to them
EPROM	-	Ultraviolet Erasable, Programmable, Read Only Memory Device
EEPROM	-	Electrically Erasable, Programmable, Read Only Memory Device
Equal	-	Connectors: comply to physical dimensions, contact material, plating and method of connection. Devices: conforming to function, pin out, electrical and operating parameter requirements, access times and interface parameters of the specified device
ETL	-	Electrical Testing Laboratories, Inc.
FCU	-	Field Controller Unit.
Firmware	-	A computer program or software stored permanently in PROM, EPROM, ROM or semi-permanently in EEPROM
FLASH	-	A +5 VDC powered IC Memory Device with nonvolatile, electrically erasable, programmable, 100K read/write minimum cycles and fast access time features

FPA	-	Front Panel Assembly
HDLC	-	High-Level Data Link Control
HEX	-	Hexadecimal
Hz	-	Hertz
IC	-	Integrated Circuit
I.D.	-	Identification
IEEE	-	Institute of Electrical and Electronics Engineers
IP	-	Internet Protocol
IPI	-	Initial Protocol Identifier
ISP	-	Information Service Provider
ISO	-	International Standards Organization
ITE	-	Institute of Transportation Engineers
ITS	-	Intelligent Transportation Systems
Jumper	-	A means of connecting/disconnecting two or more conductive by soldering/desoldering a conductive wire or by PCB post jumper
KB	-	Kilobytes
Laboratory	-	The established laboratory of the AGENCY or other laboratories authorized by the AGENCY to test materials involved in the contract
LED	-	Light Emitting Diode
LOGIC	-	Negative Logic Convention (Ground True) State
LSB	-	Least Significant Byte
lsb	-	Least Significant Bit
MB	-	MegaByte
MSB	-	Most Significant Byte

msb	-	Most Significant Bit
m	-	Milli
MCU/MPU/ IMP	-	Micro Controller Unit, Microprocessor Unit, or Integrated Multiprotocol Processor
MIL	-	Military Specifications
MODEM	-	Modulation/Demodulation Unit
Module	-	A functional unit that plugs into an assembly
Motherboard	-	A printed circuit connector interface board with no active or passive components
MOS	-	Metal-Oxide Semiconductor
MOV	-	Metal-Oxide Varistor
MS	-	Military Standards
M/170	-	Program Module/Model 170 Controller Unit Connector
M/170E	-	Model 170E Auxiliary Board Connector
N	-	Newton: SI unit of force
N.C.	-	Normally closed contact
N.O.	-	Normally open contact
NA	-	Presently Not Assigned. Cannot be used by the contractor for other purposes
NEMA	-	National Electrical Manufacturer's Association
NETA	-	National Electrical Testing Association, Inc.
n	-	nano
NLSB	-	Next Least Significant Byte
nlsb	-	Next Least Significant Bit
NMSB	-	Next Most Significant Byte

nmsb	-	Next Most Significant Bit
NTCIP	-	National Transportation Communication for ITS Protocol
PCB	-	Printed Circuit Board
PDA	-	Power Distribution Assembly
PLA/PAL	-	Programmable Array Logic Device
Power Failure	-	A Power Failure is said to have occurred when the incoming line voltage falls below 92 +/- 2 VAC for 50 ms. See Power Conditions.
Power Restoration	-	Power is said to be restored when the incoming line voltage equals or exceeds 97 +/- 2 VAC for 50 ms. See Power Conditions.
Power Conditions	-	16.7 ms (one 60 Hz cycle) reaction period is allowed to be included in the 50 ms timing or added to (67 ms duration). The hysteresis between power failure and power restoration voltage settings shall be a min. of 5 VAC with a threshold drift of no more than 0.2 VAC
PMPP	-	Point-to-Multi-Point Protocol
ppm	-	Parts per million
PPP	-	Point-to-Point Protocol
PWM	-	Pulse Width Modulation
RAM	-	Random Access Memory
RDR	-	ACIA Receiver Data Register
RF	-	Radio Frequency
RMS	-	Root-Mean-Square
ROM	-	Read Only Memory Device
RTC	-	Model 170E Controller Unit Real Time Clock. This circuitry provides a 170E CPU IRQ Interrupt pulse clocked off of the local power company's line frequency every 16.67 ms.
RTCA	-	Real Time Clock Adjuster Circuitry

RTS	-	Request to Send
R/W	-	Model 170E Controller Unit Read/Write Control Line
SCI	-	Serial Communications Interface
SDLC	-	Synchronous Data Link Control
S	-	Logic State
s	-	second
Second Sourced	-	Produced by more than one manufacturer
SR	-	ACIA Status Register
SRAM	-	Static Random Access Memory Device
SW	-	Switch
TB	-	Terminal Block
TDR	-	ACIA Transmit Data Register
TIA	-	Telecommunications Industry Association
TOD	-	Time Of Day Clock
Triac	-	Silicon-Controlled Rectifier which controls power bilaterally in an AC switching circuit
TTL	-	Transistor-Transistor Logic
Thumb Screw Device	-	(TSD) A retractable screw fastener with projecting stainless steel screw, spring and natural aluminum knob finish. (TSD No. 2 shall be flat black.) TSD No.1 - 8-32 SOUTHCO #47-62-301-20 or equal. TSD No.2 - 8-32 SOUTHCO #47-62-301-60 or equal. TSD No.3 - M3 SOUTHCO #47-82-101-10 or equal.
μ	-	Micro
UL	-	Underwriter's Laboratories, Inc.

VAC	-	Voltage Alternating Current
VDC	-	Voltage Direct Current
VMA	-	Valid Memory Address
VME	-	Versa Module Eurocard, VMEbus Standard IEEE P1014/D1.2
VMS	-	Variable Message Sign
x	-	Number Value
XX	-	Manufacturer's Option
WDT	-	Watchdog Timer: A monitoring circuit, external to the device watched, which senses an Output Line from the device and reacts

CHAPTER 1 SECTION 2

GENERAL

1.2.1
In CASE of CONFLICT, the individual chapter shall govern over Chapter 1.

1.2.2
All furnished equipment shall be new and unused. Vacuum or gaseous tubes and electro-mechanical devices (unless specifically called out) shall not be used.

1.2.3
INTERCHANGEABILITY - The following assemblies and their respective associated devices shall electrically and mechanically intermate and be compatible with each other:

ASSEMBLIES	ASSOCIATED DEVICES
Output File #1 & #2	- Model 200 Switch Pack - Model 210 Monitor Unit - Model 430 Heavy Duty Relay
Input File	- Models 222, 224, & 232E Detectors - Models 242 & 252 Isolators
PDA #2	- Model 204 Flasher Unit - Model 206 Power Supply Module
PDA #3	- Model 200 Switch Pack - Model 206 Power Supply Module - Model 208 Monitor Unit - Model 430 Heavy Duty Relay
PDA #4	- Model 206 Power Supply - CMS Isolation Module
Model 170E Controller Unit	- Cabinet Models 332, 334 & 336 - Model 400 MODEM - Model 412C Program Module
Model 2070 Controller Unit	- Cabinet Models 332, 334, 336 & ITS - Model 2070-1 CPU Module - Model 2070-2 Field I/O Module - Model 2070-3 Front Panel Assembly - Model 2070-4 Power Supply - Model 2070-5 VME Cage Assembly - Model 2070-6 Serial Comm Module

	- Model 2070-7 Serial Comm Module
Input Assembly	- Model 222, 222E, 232E & 224 Sensor Unit - Model 242 and 252 Isolator Unit - Model 218 Serial Interface Unit (SIU)
Output Assembly	- Model 200 Switch Pack Unit - Model 205 Transfer Relay Unit - Model 214 Auxiliary Monitor Unit - Model 218 SIU Unit
PDA ITS	- 2 Model 204 Flasher Units - Model 212 Cabinet Monitor Unit - Model 216-12 & 216-24 Power Supply Units
Model 2070-N1 Controller Unit	- Model 2070 Controller Unit - Model 2070-8 NEMA Module - Model 2070-4N Field I/O Module
Model 2070-N2 Controller Unit	- Model 2070-2N Field I/O Module - Model 2070-4N Power Supply Module
Pixel Driver Assembly	- Pixel Driver Module

1.2.4 DOCUMENTATION

1.2.4.1
Two copies of Manual Documentation shall be supplied for each item purchased up to 200 manuals per order. The manual shall be bound in durable covers made of either 65-pound stock paper or clear plastic. The manual shall be printed on 215.9 mm by 279.4 mm paper, with the exception that schematics, layouts, parts lists and plan details may be on 279.4 mm by 431.8 mm sheets, with each sheet neatly folded to 215.9 mm by 279.4 mm size. Manual text font shall be HELVETICA BOLD. Text characters shall be no more than 10 characters per 25.4 mm and 7 lines per 25.4 mm, with the exception of schematic text, which shall be no more than 18 characters per 25.4 mm and 11 lines per 25.4 mm.

1.2.4.2
Each manual shall include the following parts in the order listed:

1. Table of Contents
2. Glossary
3. General Description
4. General Characteristics
5. Installation
6. Adjustments

7. Theory of Operation
    a. Systems Description (include block diagram).
    b. Detailed Description of Circuit Operation.
8. Maintenance
    a. Preventive Maintenance.
    b. Trouble Analysis.
    c. Trouble Shooting Sequence Chart.
    d. Wave Forms.
    e. Voltage Measurements.
    f. Alignment Procedures.
9. Parts List (include circuit and board designation, part type and class, power rating, component manufacturer, mechanical part manufacturer, data specification sheets for special design components and original manufacturer's part number).
10. Electrical Interconnection Details & Drawings.
11. Schematic and Logic Diagram.
12. Assembly Drawings and a pictorial diagram showing physical locations and identification of each component or part.
13. The date, serial numbers and revision numbers of equipment covered by the manuals shall be printed on the front cover of the manuals.

1.2.4.3
Manuals for the cabinet shall be furnished in the cabinet plastic pouch.

1.2.4.4
A preliminary draft of the manual shall be submitted to the Engineer for approval prior to final printing.

1.2.5
PACKAGING - Each item delivered shall be individually packed in its own shipping container. When loose styrofoam is used for packing the item, the item shall be sealed in a plastic bag to prevent direct contact with the styrofoam.

1.2.6
DELIVERY - Each item delivered for testing shall be complete, including manuals, and ready for testing.

1.2.7 METALS

1.2.7.1
ALUMINUM - Sheet shall be 63 gage American Standard (0.062 inch) minimum thick Type 3003-H14 or Type 5052-H32 ASTM Designation B209 aluminum alloy. Rod, Bar and Extruded shall be Type 6061-T6, or equal.

1.2.7.2
STAINLESS STEEL - Sheet shall be annealed or one-quarter-hard complying with the ASTM Designation: A666 for Type 304, Grades A or B, stainless steel sheet.

1.2.7.3
COLD ROLLED STEEL - Sheet, Rod, Bar and Extruded shall be Type 1018/1020.

1.2.7.3.1
Plating - All cold roll steel shall be plated. All plating shall be either cadmium plating meeting the requirements of Federal Specification QQ-P-416C, Type 2 Class 1 or zinc plating meeting the requirements of ASTM B633-85 Type II SC4.

1.2.7.4
All sharp edges and corners shall be rounded.

1.2.8
All bolts, nuts, washers, screws (size 8 or larger), hinges and hinge pins shall be stainless steel unless otherwise specified.

1.2.9
Within the circuit of any device, module, or PCB, electrical isolation shall be provided between DC logic ground, equipment ground and the AC grounded conductor. They shall be electrically isolated from each other by 500 megohms, minimum, when tested at the input terminals with 100 VDC.

1.2.10
DAUGHTER BOARDS – Keyboards and LCD/LED Displays are considered daughter boards. Daughter boards shall be mechanically secured with a minimum of four spacers / metal screws. Connectors shall be either Flat Cable or PCB Headers. Components are allowed to be mounted under the daughter board.

CHAPTER 1 SECTION 3

COMPONENTS

1.3.1
GENERAL - All components shall be second sourced and shall be of such design, fabrication, nomenclature or other identification as to be purchased from a wholesale distributor or from the component manufacturer, except as follows:

1.3.1.1
When a component is of such special design that it precludes the purchase of identical components from any wholesale distributor or component manufacturer, one spare duplicate component shall be furnished with each 20, or fraction thereof, components used.

1.3.1.2
The electronic circuit design shall be such that all components of the same generic type, regardless of manufacturer, shall function equally in accordance with the specifications.

1.3.2 ELECTRONIC COMPONENTS

1.3.2.1
No device shall be socket mounted unless specifically called out or requested and approved at Qualified Product List Submittal.

1.3.2.2
No component shall be operated above 80% of its maximum rated voltage, current or power ratings. Digital components shall not be operated above 3% over their nominal voltage, current or power ratings.

1.3.2.3
No component shall be provided where the manufactured date is 3 years older than the contract award date. The design life of all components, operating for 24 hours a day and operating in their circuit application, shall be 10 years or longer.

1.3.2.4
Encapsulation of 2 or more discrete components into circuit modules is prohibited except for transient suppression circuits, resistor networks, diode arrays, solid-state switches, optical isolators and transistor arrays. Components shall be arranged so they are easily accessible, replaceable and identifiable for testing and maintenance. Where damage by shock or vibration exists, the component shall be supported mechanically by a clamp, fastener, retainer, or hold-down bracket.

1.3.2.5
The Contractor shall submit detailed engineering technical data on all components at the request of the Engineer. A letter from the component manufacturer shall be submitted with the detailed engineering data when the proposed application of the component alters

the technical data. The letter shall certify that the component application meets specification requirements.

1.3.3
CAPACITORS - The DC and AC voltage ratings as well as the dissipation factor of a capacitor shall exceed the worst-case design parameters of the circuitry by 150%. Capacitor encasements shall be resistant to cracking, peeling and discoloration. All capacitors shall be insulated and shall be marked with their capacitance values and working voltages. Electrolytic capacitors shall not be used for capacitance values of less than 1.0 microfarad and shall be marked with polarity.

1.3.4
POTENTIOMETERS - Potentiometers with ratings from 1 to 2 watts shall meet Military Type RV4 requirements. Under 1 Watt potentiometers shall be used only for trimmer type function. The potentiometer power rating shall be at least 100% greater than the maximum power requirements of the circuit.

1.3.5
RESISTORS - Fixed carbon film, deposited carbon, or composition-insulated resistors shall conform to the performance requirements of Military Specifications MIL-R-11F or MIL-R-22684. All resistors shall be insulated and shall be marked with their resistance values. Resistance values shall be indicated by the EIA color codes, or stamped value. The value of the resistors shall not vary by more than 5% between -37 ^{0}C and 74 ^{0}C.

1.3.5.1
Special ventilation or heat sinking shall be provided for all 2-watt or greater resistors. They shall be insulated from the PCB.

1.3.6 SEMICONDUCTOR DEVICES

1.3.6.1
All solid-state devices, except LED's, shall be of the silicon type.

1.3.6.2
All transistors, integrated circuits, and diodes shall be a standard type listed by EIA and clearly identifiable.

1.3.6.3
All metal oxide semiconductor components shall contain circuitry to protect their inputs and outputs against damage due to high static voltages or electrical fields.

1.3.6.4
Device pin "1" locations shall be properly marked on the PCB adjacent to the pin.

1.3.7
TRANSFORMERS AND INDUCTORS - All power transformers and inductors shall have the manufacturer's name or logo and part number clearly and legibly printed on the case

or lamination. All transformers and inductors shall have their windings insulated, shall be protected to exclude moisture, and their leads color coded with an approved EIA color code or identified in a manner to facilitate proper installation.

1.3.8
TRIACS - Each triac with a designed circuit load of greater than 0.5 Amperes at 120 VAC shall be mounted to a heat sink with a machine screw and nut with integral lockwasher.

1.3.9 CIRCUIT BREAKERs shall be listed by UL or ETL. The trip and frame sizes shall be plainly marked (marked on the breaker by the manufacturer), and the ampere rating shall be visible from the front of the breaker. Contacts shall be silver alloy and enclosed in an arc-quenching chamber. Overload tripping shall not be influenced by an ambient air temperature range of from -18 degrees C to 50 degrees C. The minimum Interrupting Capacity shall be 5,000 Amperes, RMS when the breaker is secondary to a UL approved fuse or primary circuit breaker and both breakers in concert provide the rated capacity. For circuit breakers 80 amperes and above, the minimum interrupting capacity shall be 10,000 amperes, RMS. Circuit breakers shall be the trip-free type with medium trip delay characteristic (Carling switch Time Delay Curve #24 or equal).

1.3.10
All FUSEs shall be 3AG Slow Blow type and resident in a holder. Fuse size rating shall be labeled on the holder. Fuses shall be easily accessible and removable without use of tools.

1.3.11 SWITCHES

1.3.11.1
DIP - Dual-inline-package, quick snap switches shall be rated for a minimum of 30,000 operations per position at 50 ma, 30 VDC. The switch contact resistance shall be 100 milliohms maximum at 2 ma, 30 VDC. The contacts shall be gold over brass (or silver). Contact for VAC or 28 VDC and shall be silver over brass (or equal).

1.3.11.2
LOGIC - The switch contacts shall be rated for a minimum of one ampere resistive load at 120 VAC and shall be silver over brass (or equal). The switch shall be rated for a minimum of 40,000 operations.

1.3.11.3
CONTROL - The switch contacts shall be rated for a minimum of five ampere resistive load at 120 VAC or 28 VDC and shall be gold over brass (or equal). The switch shall be rated for a minimum of 40,000 operations.

1.3.11.4
POWER - Ratings shall be the same as CONTROL, except the contact rating shall be a minimum of ten amperes at 125 VAC.

1.3.12
TERMINAL BLOCKS - The terminal blocks shall be barrier type, rated at 20 amperes and 600 VAC RMS minimum. The terminal screws shall be 7.938 mm minimum length nickel plated brass binder head type with screw inserts of the same material. Screw size is called out under the associated file, panel or assembly.

1.3.13
WIRING, CABLING AND HARNESSES

1.3.13.1
HARNESSES shall be neat, firm and properly bundled with external protection. They shall be tie-wrapped and routed to minimize crosstalk and electrical interference. Each harness shall be of adequate length to allow any conductor to be connected properly to its associated connector or termination point. Conductors within an encased harness have no color requirements. Printed circuit motherboards are to be used where possible to eliminate or reduce cabinet wiring.

1.3.13.2
Wiring containing AC shall be bundled separately or shielded separately from all DC logic voltage control circuits.

1.3.13.3
Wiring shall be routed to prevent conductors from being in contact with metal edges. Wiring shall be arranged so that any removable assembly may be removed without disturbing conductors not associated with that assembly.

1.3.13.4*
All conductors, except those which can be readily traced, shall be labeled. Labels attached to each end of the conductor shall identify the destination of the other end of the conductor.

1.3.13.5
All conductors shall conform to MIL-W-16878E/1 or better and shall have a minimum of 19 strands of copper. The insulation shall be polyvinyl chloride with a minimum thickness of 10 mils or greater. Where insulation thickness is 15 mils or less, the conductor shall conform to MIL-W-16878/17.

1.3.13.6
Conductor color identification shall be as follows:

Grounded AC circuits - gray or white
Equip. Ground - solid green or continuous green color with 1 or more yellow stripes.

DC logic ground - continuous white with a red stripe.
Ungrounded AC+ - continuous black or black with colored stripe.
DC logic ungrounded or signal - any color not specified

1.3.14

INDICATORS AND CHARACTER DISPLAYS - All indicators and character displays shall be readily visible at a radius of up to 1.2 m (4 feet) within the cone of visibility when the indicator is subjected to 97,000 lux (9,000 foot-candles) of white light with the light source at 45 +/-2 degrees to the front panel.

1.3.14.1
INDICATORS - All indicators and character displays shall have a minimum 90 degrees cone of visibility with its axis perpendicular to the panel on which the indicator is mounted. All indicators shall be self-luminous. All indicators shall have a rated life of 100,000 hours minimum. Each LED indicator shall be white or clear when off and invisible when on. Indicators supplied on equipment requiring handles shall be mounted such that a horizontal clearance of 15 degrees minimum shall be provided for Models 208, 210, 212, 222, 232, 242 and 252, as well as a clearance of 30 degrees minimum for Models 200, 204 and 206.

1.3.14.2
CHARACTER DISPLAYS - Liquid Crystal Displays (LCD) shall operate at temperatures of -20 ^{0}C to +70 ^{0}C.

1.3.15 CONNECTORS

1.3.15.1
GENERAL - All connectors shall be keyed to prevent improper insertion of the wrong connector. The mating connectors shall be designated as the connector number and male/female relationship, such as C1P (plug or PCB edge connector) and C1S (socket).

1.3.15.2
The TYPE T connector shall be a single row, 10 position, feed through terminal block. The terminal block shall be a barrier type with 6-32, 6.35 mm or longer, nickel plated brass binder head screws. Each terminal shall be permanently identified as to its function.

1.3.15.3
PLASTIC CIRCULAR and M TYPE CONNECTORS - Pin and socket contacts for connectors shall be beryllium copper construction subplated with 0.00127 mm nickel and plated with 0.00076 mm gold. Pin diameter shall be 1.57 mm. All pin and socket connectors shall use the AMP #601105-1 or #91002-1 contact insertion tool and the AMP #305183 contact extraction tool.

1.3.15.4
CARD EDGE and TWO-PIECE PCB CONNECTORS

1.3.15.4.1
PCB edge connectors shall have bifurcated gold-plated contacts. The PCB receptacle connector shall meet or exceed the following:

Operating Voltage:	600 VAC (RMS)
Current Rating:	5.0 amperes

Insulation Material:	Diallyl Phthalate or Thermoplastic
Insulation Resistance:	5,000 megohms
Contact Material:	Copper alloy plated with 0.00127 mm (0.00005 inch) of nickel and 0.000381 mm (0.000015 inch) of gold
Contact Resistance:	0.006 ohm maximum

1.3.15.4.2
The two-piece PCB connector shall meet or exceed the DIN 41612.

1.3.15.4.3
The PCB 22/44 Connector shall have 22 independent contacts per side; dual sided with 3.96 mm (0.156 inch) contact centers.

1.3.15.4.4
The PCB 28/56 Connector shall have 28 independent contacts per side, dual sided with 3.96 mm (0.156 inch) contact centers.

1.3.15.4.5
The PCB 36/72 Connector shall have 36 independent contacts per side, dual sided with 2.54 mm (0.100 inch) contact centers.

1.3.15.4.6
The PCB 43/86 Connector shall have 43 independent contacts per side, dual sided with 2.54 mm (0.100 inch) contact centers.

1.3.15.5
WIRE TERMINAL CONNECTORS - Each wire terminal shall be solderless with PVC insulation and a heavy duty short -locking spade type connector. All terminal connectors shall be crimped using a Controlled-Cycle type crimping tool.

1.3.15.6
FLAT CABLE CONNECTORS - Each flat cable connector shall be designed for use with 26 AWG cable; shall have dual cantilevered phosphor bronze contacts plated with 508 nm of gold over 1270 nm of nickel; and shall have a current rating of 1 A minimum and an insulation resistance of 5 megohms minimum.

1.3.15.7
PCB HEADER POST CONNECTORS - Each PCB header post shall be 1.0 mm square by 8.7 mm high; shall be mounted on 4.0 mm centers; and shall be tempered hard brass plated with 381 nm of gold over 1.270 mm of nickel.

1.3.15.8
PCB HEADER SOCKET CONNECTORS - Each PCB header socket block shall be nylon or diallyl phthalate. Each PCB header socket contact shall be removable, but crimp-connected to its conductor. The Contractor shall list the part number of the

extraction tool recommended by its manufacturer. Each PCB header socket contact shall be brass or phosphor bronze plated with 562 nm of gold over 1270 nm of nickel.

1.3.16
SURGE PROTECTION DEVICE - A three-electrode gas tube type that is capable of withstanding 15 pulses of peak current each of which will rise in 8 us and fall in 20 us to 0.5 of the peak voltage at 3-minute intervals. Peak current rating shall be 20,000 amperes. It shall have the following ratings:

IMPULSE BREAKDOWN:	Less than 1,000 volts in less than 0.1 us at 10 KV/us.
STANDBY CURRENT:	Less than 1 ma.
STRIKING VOLTAGE:	Greater than 212 volts.

CHAPTER 1 SECTION 4

MECHANICAL

1.4.1
ASSEMBLIES - All assemblies shall be modular, easily replaceable and incorporate plug-in capability for their associated devices or PCBs. Assemblies shall be provided with 2 guides for each plug-in PCB or associated device (except relays). The guides shall extend to within 19.05 mm from the face of either the socket or connector and front edge of the assembly. If Nylon guides are used, the guides shall be securely attached to the file or assembly chassis.

1.4.2
PCB DESIGN - No components, traces, brackets or obstructions shall be within 3.175 mm of the board edge (guide edges). The manufacturer's name or logo, model number, serial number, and circuit issue or revision number shall appear and be readily visible on all PCBs. Devices to prevent PC Board from backing out of their assembly connectors shall be provided.

1.4.3
MODEL NUMBERS - The manufacturer's model number, serial number, and circuit issue or revision number shall appear on the rear panel of all equipment supplied (where such panel exists). In addition to any assignment of model numbers by the manufacturer, the State model number shall be displayed on the front panel in bold type, at least 6.35 mm high.

1.4.4
All PCB connectors mounted on a motherboard shall be mechanically secured to the chassis or frame of the unit or assembly.

1.4.5
All screw type fasteners shall utilize locking devices or locking compounds except for finger screws, which shall be captive.

1.4.6
WORKMANSHIP - Workmanship shall conform with the requirements of this specification and be in accordance with the highest industry standards.

1.4.7
TOLERANCES - The following tolerances shall apply, except as specifically shown on the plans or in these specifications:

Sheet Metal	+/- 1.334 mm (0.0525 inch)
PCB	+/- 0.254 mm (0.010 inch)
Edge Guides	+/- 0.381 mm (0.015 inch)

CHAPTER 1 SECTION 5

ENGINEERING

1.5.1 HUMAN ENGINEERING

1.5.1.1
The equipment shall be engineered for simplicity, ease of operation and maintenance.

1.5.1.2
Knobs shall be a minimum of 12.7 mm in diameter and a minimum separation of 12.7 mm edge to edge.

1.5.1.3
PCBs shall slide smoothly in their guides while being inserted into or removed from the frame and shall fit snugly into the plug-in PCB connectors. PCBs shall require a force no less than 22.24 N or greater than 222.4 N for insertion or removal.

1.5.2
DESIGN ENGINEERING - The design shall be inherently temperature compensated to prevent abnormal operation. The circuit design shall include such compensation as is necessary to overcome adverse effects due to temperature in the specified environmental range. Personnel shall be protected from all dangerous voltages.

1.5.3
GENERATED NOISE - No item, component or subassembly shall emit a noise level exceeding the peak level of 55 dBa when measured at a distance of one meter away from its surface, except as otherwise noted. No item, component or subassembly shall emit a noise level sufficient to interfere with processing and communication functions of the controller circuits.

CHAPTER 1 SECTION 6

PRINTED CIRCUIT BOARDS

1.6.1 DESIGN, FABRICATION AND MOUNTING

1.6.1.1
All contacts on PCBs shall be plated with a minimum thickness of 0.000763 mm gold over a minimum thickness of 0.001905 mm nickel.

1.6.1.2
PCB design shall be such that when a component is removed and replaced, no damage is done to the board, other components, conductive traces or tracks.

1.6.1.3
Fabrication of PCBs shall be in compliance with Military Specification MIL-P-13949, except as follows:

1.6.1.3.1
NEMA FR-4 glass cloth base epoxy resin copper clad laminates 1.590 mm minimum thickness shall be used. Inter-component wiring shall be by laminated copper clad track having a minimum weight of 0.556 kilogram per square meter with adequate cross section for current to be carried. All copper tracks shall be plated or soldered to provide complete coverage of all exposed copper tracks. Jumper wires to external PCB components shall be from plated-through padded holes and as short as possible.

1.6.1.3.2
In Section 3.3 of Military Specification MIL-P-13949G Grade of Pits and Dents shall be of Grade B quality (3.5.1.3) or better. Class of permissible bow or twist shall be Class C (Table V) or better. Class of permissible warp or twist shall be Class A (Table II) or better.

1.6.1.3.3
Sections 4.2 through 6.6 of Military Specification MIL-P-13949G (inclusive) shall be omitted except as referenced in previous sections of this specification.

1.6.1.4
The mounting of parts and assemblies on the PCB shall conform to Military Specification MIL-STD-275E, except as follows:

1.6.1.4.1
Semiconductor devices that dissipate more than 250 mW or cause a temperature rise of 10 degrees C or more shall be mounted with spacers, transipads or heat sinks to prevent contact with the PCB.

1.6.1.4.2
When completed, all residual flux shall be removed from the PCB.

1.6.1.4.3
The resistance between any 2 isolated, independent conductor paths shall be at least 100 megohms when a 500 VDC potential is applied.

1.6.1.4.4
All PCBs shall be coated with a moisture resistant coating.

1.6.1.4.5
Where less than 6.35 mm lateral separation is provided between the PCB (or the components of a PCB) and any metal surface, a 0.79375 +/-0.39624 mm thick Mylar (polyester) plastic cover shall be provided on the metal to protect the PCB.

1.6.1.5
Each PCB connector edge shall be chamfered at 30 degrees from board side planes. The key slots shall also be chamfered so that the connector keys are not extracted upon removal of board or jammed upon insertion. The key slots shall be 1.143 +/- 0.127 mm for 2.54 mm spacing and 1.40 +/- 0.127 mm for 3.96 mm spacing.

1.6.2 SOLDERING

1.6.2.1
Hand soldering shall comply with Military Specification MIL-STD-2000.

1.6.2.2
Automatic flow soldering shall be a constant speed conveyor system with the conveyor speed set at optimum to minimize solder peaks or points. Temperature shall be controlled to within +/- 8 degrees C of the optimum temperature. The soldering process shall result in the complete coverage of all copper runs, joints and terminals with solder except that which is covered by an electroplating process. Wherever clinching is not used, a method of holding the components in the proper position for the flow process shall be provided.

1.6.2.2.3
If exposure to the temperature bath is of such time-temperature duration, as to come within 80% of any component's maximum specified time-temperature exposure, that component shall be hand soldered to the PCB after the flow process has been completed.

1.6.3
DEFINITIONS - Definitions for the purpose of this section on PCBs shall be taken from MIL-P-55110D Section 3.3 and any current addendum.

1.6.4
JUMPERS Jumpers are not allowed unless called out in the specifications or approved upon submittal at Qualified Products List Time.

CHAPTER 1 SECTION 7

QUALITY CONTROL

1.7.1
COMPONENTS - All components shall be lot sampled to assure a consistent high conformance standard to the design specification of the equipment.

1.7.2
SUBASSEMBLY, UNIT OR MODULE - Complete electrical, environmental and timing compliance testing shall be performed on each module, unit, printed circuit or subassembly. Housing, chassis, and connection terminals shall be inspected for mechanical sturdiness, and harnessing to sockets shall be electrically tested for proper wiring sequence. The equipment shall be visually and physically inspected to assure proper placement, mounting, and compatibility of subassemblies.

1.7.3
PREDELIVERY REPAIR

1.7.3.1
Any defects or deficiencies found by the inspection system involving mechanical structure or wiring shall be returned through the manufacturing process or special repair process for correction.

1.7.3.2
PCB flow soldering is allowed a second time if copper runs and joints are not satisfactorily coated on the first run. Under no circumstances shall a PCB be flow soldered more than twice.

1.7.3.3
Hand soldering is allowed for printed circuit repair.

CHAPTER 1 SECTION 8

ELECTRICAL, ENVIRONMENTAL AND TESTING REQUIREMENTS

1.8.1
GENERAL - The requirements called out in these specification dealing with equipment evaluation are a minimum guide and shall not limit the testing and inspection to insure compliance.

1.8.2
CERTIFICATION - These test procedures shall be followed by the Contractor who shall certify that they have conducted inspection and testing in accordance with these specifications.

1.8.3
INSPECTION - A visual and physical inspection shall include mechanical, dimensional and assembly conformance of all parts of these specifications.

1.8.4
ENVIRONMENTAL & ELECTRICAL - All components shall properly operate within the following limits unless otherwise noted:

Applied Line Voltage: 90 to 135 VAC, note "Power Failure / Restoration" limits
Frequency: 60 (+/-3.0) Hertz
Humidity: 5% to 95%
Ambient Temperature: -37 ^{0}C to +74 ^{0}C
Shock - Test per Specification MIL-STD-810E Method 516.4.
Vibration - per Specification MIL-STD-810E Method 514.4, equipment class G.

1.8.4.1
All circuits, unless otherwise noted, shall commence operation at or below 90 VAC as the applied voltage is raised from 50 to 90 VAC at a rate of 2 (+/-0.5) volts / second.

1.8.4.2
All equipment shall be unaffected by transient voltages normally experienced on commercial power lines. Where applicable, equipment purchased separately from the cabinet (which normally is resident) will be tested for compliance in a State accepted cabinet connected to the commercial power lines.

1.8.4.3
The power line surge protection shall enable the equipment being tested to withstand (nondestructive) and operate normally following the discharge of a 25 microfarad capacitor, charged to plus and minus 2,000 volts, applied directly across the incoming AC line at a rate of once every 10 seconds for a maximum of 50 occurrences per test. The unit under test will be operated at 20 ^{0}C (+/-5) ^{0}C and at 120 (+/-12) VAC.

1.8.4.4
The equipment shall withstand (nondestructive) and operate normally when one discharge pulse of plus or minus 300 volts is synchronously added to its incoming AC power line and moved uniformly over the full wave across 360 degrees or stay at any point of Line Cycle once every second. Peak noise power shall be 5 kilowatts with a pulse rise time of 500 ns. The unit under test will be operated at 20 ^{0}C (+/-5) ^{0}C and at 120 (+/-12) VAC.

1.8.4.5
The controller unit communications modules shall be tested resident in a State-accepted controller unit which in turn is housed in the cabinet.

1.8.4.6
CMS system equipment will be tested for compliance as a complete system with power from commercial power lines applied at the CMS CIP Panel and the CMS Power Surge Protector deactivated or removed.

1.8.4.7
Equipment shall comply only with the requirements of UL Bulletin of Research No. 23, "Rain Tests of Electrical Equipment."

1.8.4.8
All equipment shall continue normal operation when subjected to the following:

1.8.4.8.1
Low Temperature Test - With the item functioning at a line voltage over Electrical Range the Device in its intended operation, the ambient temperature shall be lowered from 20 ^{0}C to –37 ^{0}C at a rate of not more than 18 ^{0}C per hour. The item shall be cycled at -37 ^{0}C for a minimum of 5 hours and then returned to 20 ^{0}C at the same rate.

1.8.4.8.2
High Temperature Test - With the item functioning at a line voltage over Electrical Range the Device in its intended operation, the ambient temperature shall be raised from 20 ^{0}C to 74 ^{0}C at a rate of not more than 18 ^{0}C per hour. The item shall be cycled at 74 ^{0}C for 5 hours and then returned to 20 ^{0}C at the same rate. The test shall be repeated with the line voltage at 135 VAC.

1.8.4.8.3
All equipment shall resume normal operation following a period of at least 5 hours at -37 ^{0}C and less than 10 percent humidity and at least 5 hours at 74 ^{0}C and 22% humidity, when 90 VAC is applied to the incoming AC.

1.8.4.9
The relative humidity and ambient temperature values in the following table shall not be exceeded.

AMBIENT TEMPERATURE VERSUS RELATIVE HUMIDITY
AT BAROMETRIC PRESSURES (29.92 In. Hg.)

Ambient Temperature/ Dry Bulb (in ^{0}C)	Relative Humidity (in percent)	Ambient Temperature/ Wet Bulb (in ^{0}C)
-37.0 to 1.1	10	-17.2 to 42.7
1.1 to 46.0	95	42.7
48.8	70	42.7
54.4	50	42.7
60.0	38	42.7
65.4	28	42.7
71.2	21	42.7
74.0	18	42.7

1.8.4.10
All equipment shall be capable of normal operation following opening and closing of contacts in series with the applied voltage at a rate of 30 openings and closings per minute for a period of 2 minutes in duration.

1.8.5 CONTRACTOR'S TESTING CERTIFICATION

1.8.5.1
A complete QC / final test report shall be supplied with each item. The test report shall indicate the name of the tester and shall be signed by a responsible manager.

1.8.5.2
The quality control procedure and test report format shall be sullied to the Engineer for approval within 15 days following the award of the contract. The quality control procedure shall include the following:

Acceptance testing of all supplied components.
Physical and functional testing of all modules and items.
A minimum 100-hour burn-in of all equipment.
Physical and functional testing of all items.

CHAPTER 2 SECTION 5

CHAPTER DETAILS

SECTION	PAGE
MODEL 170E CONTROLLER UNIT DIAGRAM	2-5-1
MODEL 170E CONTROLLER UNIT BLOCK DIAGRAMS	2-5-2
MODEL 170E INPUT PORT ADDRESS	2-5-3
MODEL 170E OUTPUT PORT ADDRESS	2-5-4
MODEL 400 MODEM	2-5-5
MODEL 412C PROGRAM MODULE & CONNECTORS M170 & M170E	2-5-6

NOTES:

1. All dimensions shall be in millimeters.
2. Program module' height and width dimensions are maximum.
3. C1 connector Pins 1, 14, 92 & 104 shall be connected to the controller unit DC logic ground.
4. All function under connector C2 & the terminal block T-1 are in reference to the MODEM
5. Detail Definitions:

   BL = BLANKING
   CC = CHARACTER CONTROL OR STROBE
   CD = CARRIER DETECT
   CH = CHARACTER
   CTS = CLEAR TO SEND
   DP = DECIMAL POINT
   LS = LEAST SIGNIFICANT
   MS = MOST SIGNIFICANT
   NA = PRESENTLY NOT ASSIGNED. CANNOT BE USED BY THE CONTRACTORS FOR OTHER PURPOSES.
   NLS = NEXT LEAST SIGNIFICANT
   NMS = NEST MOST SIGNIFICANT
   P&I = PHASE AND INTERVAL
   RTS = REQUEST TO SEND

MODEL 170E CONTROLLER UNIT DIAGRAM

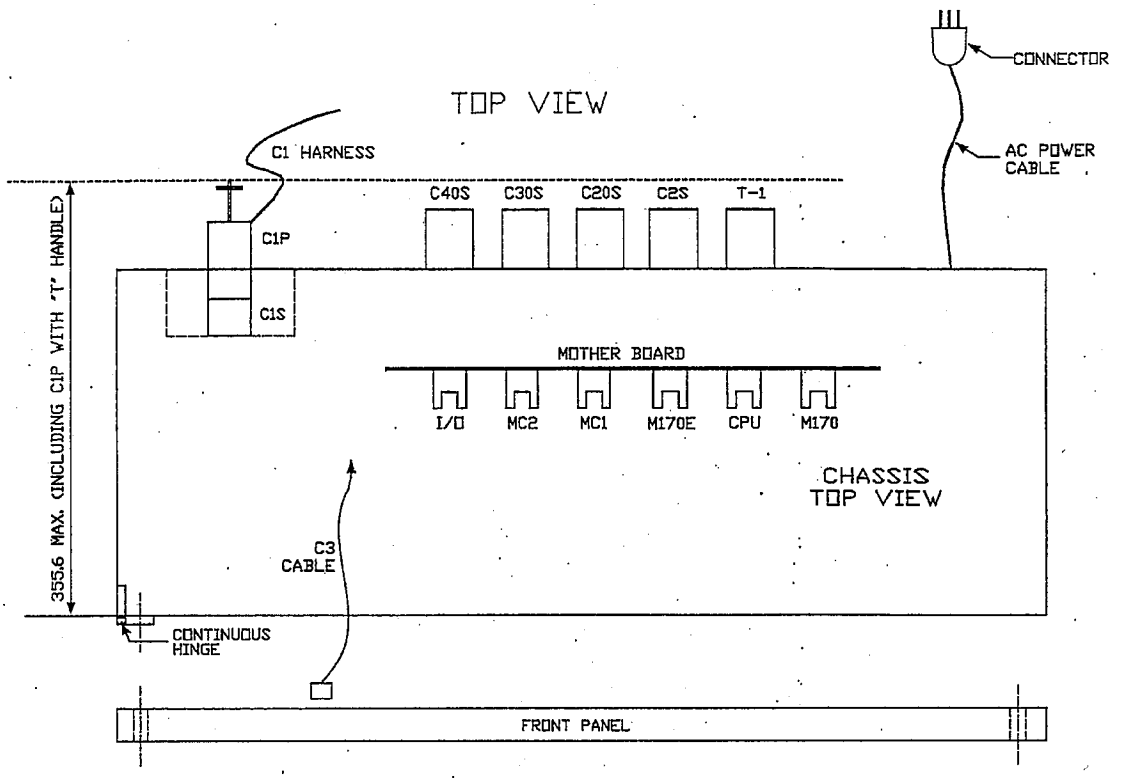

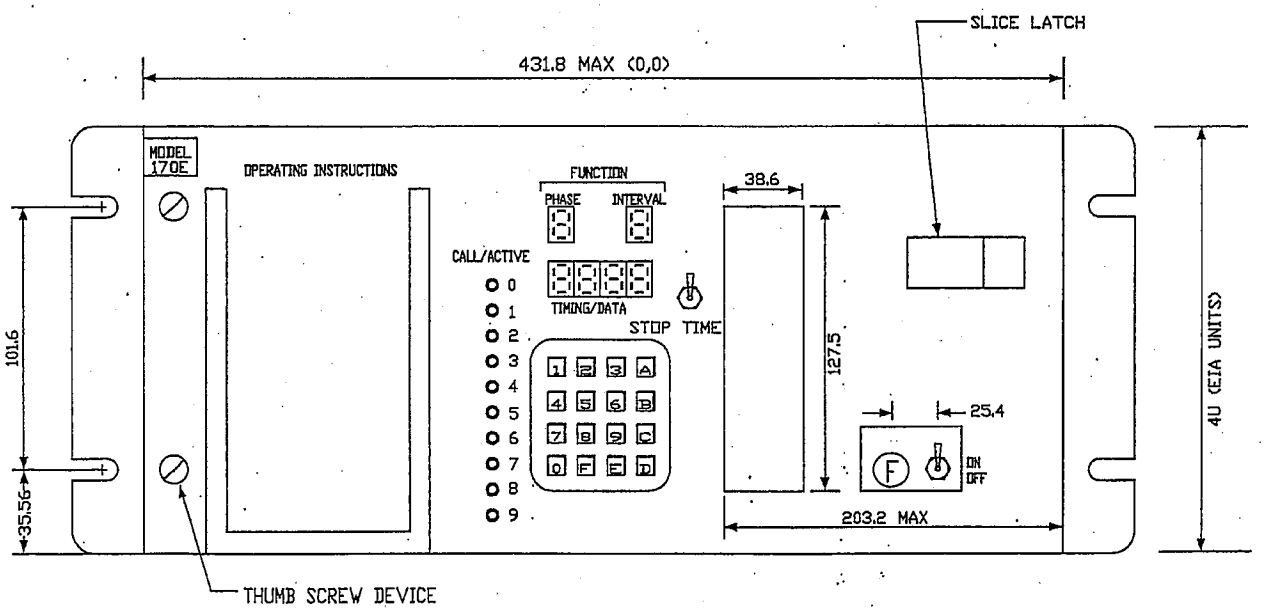

FRONT PANEL DISPLAY AND UNIT DETAIL

TITLE: MODEL 170E CONTROLLER UNIT DIAGRAM	
NO SCALE	
AUGUST 16, 2002	2-5-1

MODEL 170E CONTROLLER UNIT BLOCK DIAGRAMS

FRONT PANEL DISPLAY BLOCK DIAGRAM

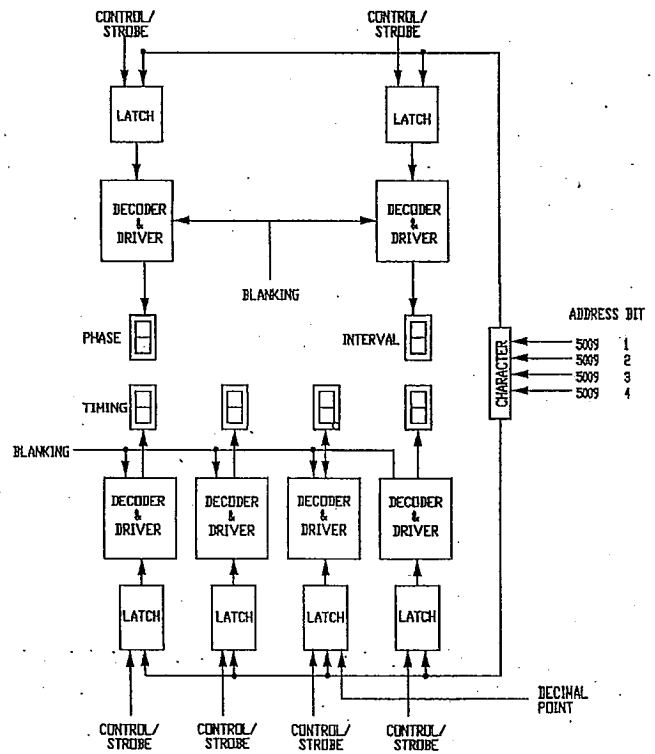

ORGANIZATION OF MODEL 170E CONTROLLER UNIT BLOCK DIAGRAM

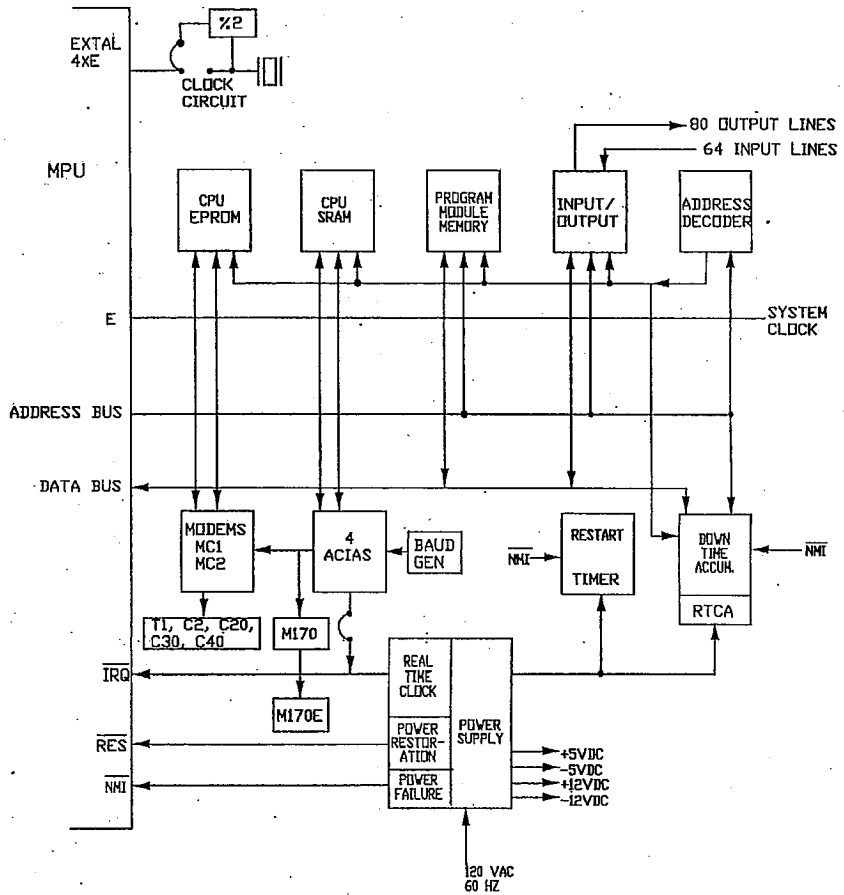

TITLE: MODEL 170E CONTROLLER UNIT BLOCK DIAGRAMS

NO SCALE

AUGUST 16, 2002

2-5-2

INPUT PORT ADDRESS ASSIGNMENTS FOR CONNECTORS C1 AND C3

INPUT PORT ADDRESS	BIT	CONNECTOR C1 C3 SOCKET CONTACTS	INPUT PORT ADDRESS	BIT	CONNECTOR C1 C3 SOCKET CONTACTS	
5001	1	39	5005	1	67	
5001	2	40	5005	2	68	
5001	3	41	5005	3	69	
5001	4	42	5005	4	70	
5001	5	43	5005	5	71	
5001	6	44	5005	6	72	
5001	7	45	5005	7	73	
5001	8	46	5005	8	74	
5002	1	47	5006	1	75	
5002	2	48	5006	2	76	
5002	3	49	5006	3	77	
5002	4	50	5006	4	78	
5002	5	51	5006	5	79	
5002	6	52	5006	6	80	
5002	7	53	5006	7	81	
5002	8	54	5006	8	82	
5003	1	55	5007	1		KEYBOARD CONTROL
5003	2	56	5007	2		KEYBOARD CH LS
5003	3	57	5007	3		KEYBOARD CH NLS
5003	4	58	5007	4		KEYBOARD CH NMS
5003	5	59	5007	5		KEYBOARD CH MS
5003	6	60	5007	6		STOP TIMING
5003	7	61	5007	7		NA
5003	8	62	5007	8		NA
5004	1	NA	5008	1		NA
5004	2	NA	5008	2		NA
5004	3	NA	5008	3		NA
5004	4	NA	5008	4		NA
5004	5	63	5008	5		NA
5004	6	64	5008	6		NA
5004	7	65	5008	7		NA
5004	8	66	5008	8		NA

CONNECTOR C2 SOCKET ASSIGNMENT (C20, C30 & C40)

SOCKET CONTACTS	C2 FUNCTION	SOCKET CONTACTS	C2 FUNCTION
A	Audio IN	J	RTS
B	Audio IN	K	Data IN
C	Audio OUT	L	Data OUT
D	+5VDC	M	CTS
E	Audio OUT	N	DC GND
F	-5VDC	P	NA
H	CD	R	NA

TERMINAL BLOCK T-1 ASSIGNMENTS

1. Audio IN
2. Audio IN
3. CD
4. RTS
5. Data IN
6. CTS
7. Data Out
8. Audio Out
9. Audio Out
10 DC GND

TITLE:

MODEL 170E INPUT ADDRESS

NO SCALE

AUGUST 16, 2002

2-5-3

OUTPUT PORT ADDRESS ASSIGNMENTS FOR CONNECTORS C1 AND C3

OUTPUT PORT ADDRESS	BIT	CONNECTOR C1 SOCKET CONTACTS	OUTPUT PORT ADDRESS	BIT	CONNECTOR C1 SOCKET CONTACTS	CONNECTOR C3
5001	1	2	5006	1	83	
5001	2	3	5006	2	84	
5001	3	4	5006	3	85	
5001	4	5	5006	4	86	
5001	5	6	5006	5	87	
5001	6	7	5006	6	88	
5001	7	8	5006	7	89	
5001	8	9	5006	8	90	
5002	1	10	5007	1	91	
5002	2	11	5007	2	93	
5002	3	12	5007	3	94	
5002	4	13	5007	4	95	
5002	5	15	5007	5	96	
5002	6	16	5007	6	97	
5002	7	17	5007	7	98	
5002	8	18	5007	8	99	
5003	1	19	5008	1		CC-PHASE
5003	2	20	5008	2		CC-INTERVAL
5003	3	21	5008	3		CC-TIMING LS
5003	4	22	5008	4		CC-TIMING NLS
5003	5	23	5008	5		CC-TIMING MLS
5003	6	24	5008	6		CC-TIMING MS
5003	7	25	5008	7		CALL LT 8
5003	8	26	5008	8		CALL LT 9
5004	1	27	5009	1		CH-LS
5004	2	28	5009	2		CH-NLS
5004	3	29	5009	3		CH-NMS
5004	4	30	5009	4		CH-MS
5004	5	31	5009	5		DP
5004	6	32	5009	6		BL-P&I
5004	7	33	5009	7		BL-TIMING
5004	8	34	5009	8		NA
5005	1	35	500A	1		CALL LT 0
5005	2	36	500A	2		CALL LT 1
5005	3	37	500A	3		CALL LT 2
5005	4	38	500A	4		CALL LT 3
5005	5	100	500A	5		CALL LT 4
5005	6	101	500A	6		CALL LT 5
5005	7	102	500A	7		CALL LT 6
5005	8	103	500A	8		CALL LT 7

TITLE: OUTPUT PORT ADDRESS ASSIGNMENTS FOR CONNECTORS C1 & C3	
NO SCALE	
AUGUST 16, 2002	2-5-4

MODEL 400 MODEM MODULE

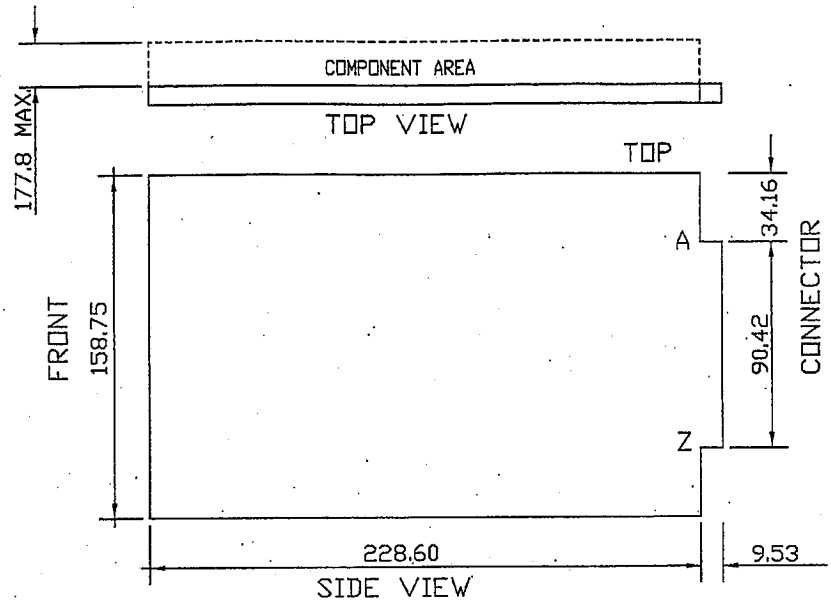

MODEL 400 MODULE CONNECTOR ASSIGNMENT

COMPONENT SIDE CONTACT	MODEL 400 FUNCTION	CIRCUIT SIDE CONTACT	MODEL 400 FUNCTION
1	NA	A	DC GROUND
2	AUDIO INPUT	B	DC GROUND
3	AUDIO INPUT	C	12 VDC
4	NA	D	12 VDC
5	NA	E	-12 VDC
6	NA	F	-12 VDC
7	NA	H	NA
8	NA	J	NA
9	NA	K	CARRIER DETECT
10	NA	L	REQUEST TO SEND
11	NA	M	DATA INPUT
12	NA	N	CLEAR TO SEND
13	NA	P	DATA OUTPUT
14	NA	R	NA
15	NA	S	NA
16	NA	T	NA
17	NA	U	NA
18	NA	V	NA
19	NA	W	NA
20	NA	X	AUDIO OUTPUT
21	NA	Y	AUDIO OUTPUT
22	NA	Z	NA

	TITLE: MODEL 400 MODEM MODULE	
	NO SCALE	
	AUGUST 16, 2002	2-5-5

MODEL 412C PROGRAM MODULE AND CONNECTORS M170 & M170E

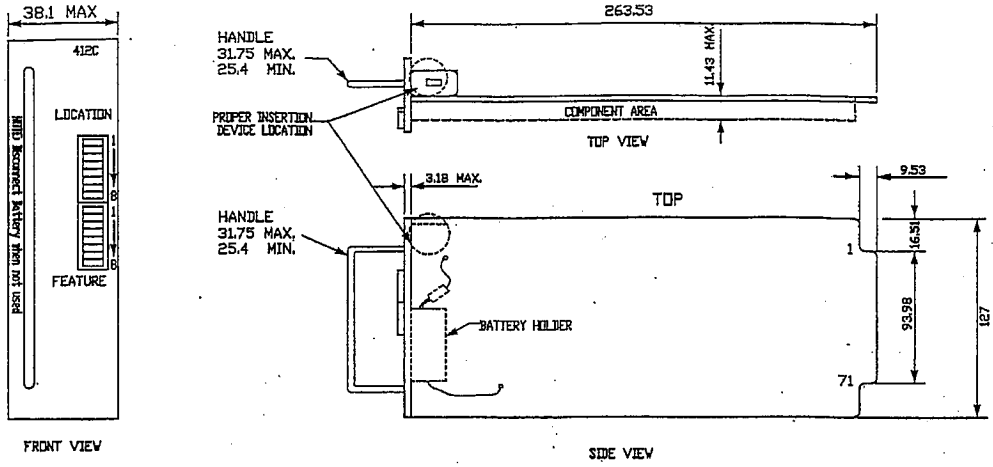

M170, M170E, AND 412C
PROGRAM MODULE CONNECTOR ASSIGNMENTS

CIRCUIT SIDE		COMPONENT SIDE		M170 ONLY
FUNCTION	PCB CONNECTOR		FUNCTION	NOT REQUIRED BY 412C
A0	1	2	A1	
A2	3	4	A3	
A4	5	6	A5	
A6	7	8	A7	
A8	9	10	A9	
A10	11	12	A11	
A12	13	14	A13	
A14	15	16	A15	
$\overline{D0}$	17	18	$\overline{D1}$	
$\overline{D2}$	19	20	$\overline{D3}$	
$\overline{D4}$	21	22	$\overline{D5}$	
$\overline{D6}$	23	24	$\overline{D7}$	
$\overline{VMA}$ / Q2(E)	25	26	NA	RES
READ/WRITE	27	28	NA	NMI
NA	29	30	NA	RDY
NA	31	32	NA	
NA	33	34	EQUIP. GND	
NA	35	36	NA	RTS ACIA 4
NA	37	38	NA	CTS ACIA 4
NA	39	40	NA	DCD ACIA 4
NA	41	42	NA	TXD ACIA 4** (SEE NOTE)
NA	43	44	NA	RXD ACIA 4** (SEE NOTE)
NA	45	46	NA	
NA	47	48	NA	
NA	49	50	NA	
NA	51	52	NA	
NA	53	54	NA	
NA	55	56	NA	
NA	57	58	NA	
12 VDC	59	60	12 VDC	
-12 VDC	61	62	-12 VDC	
	KEY			
-5 VDC	63	64	-5 VDC	
5 VDC	65	66	5 VDC	
5 VDC	67	68	5 VDC	
GND	69	70	GND	
GND	*71	*72	GND	

* PINS 71 & 72 ON M170 & M170E CONNECTORS SHALL BE COMMONED. PINS 71 & 72 ON THE MODEL 412C SHALL BE TIED TO PINS 69 & 70.

** RELATIVE TO THE ACIA

TITLE:
MODEL 412C PROGRAM MODULE AND CONNECTORS M170 & M170E

NO SCALE

AUGUST 16, 2002

2-5-6

CHAPTER 6

SPECIFICATIONS FOR CABINET MODELS 332, 334 & 336

TABLE OF CONTENTS

	PAGE
SECTION 1 - GENERAL REQUIREMENTS AND CABINET MODEL COMPOSITION	6-1-1
SECTION 2 - HOUSING REQUIREMENTS	6-2-1
SECTION 3 - CABINET CAGE REQUIREMENTS	6-3-1
SECTION 4 - CABINET ASSEMBLIES	6-4-1
SECTION 5 - CABINET WIRING	6-5-1
SECTION 6 - POWER LINE SURGE PROTECTORS	6-6-1

SECTION 1 - GENERAL REQUIREMENTS AND CABINET MODEL COMPOSITION

6.1.1 Unless otherwise specified the model shall be furnished, ready for operation with the following composition.

1.1.1 Model 332A Cabinet (Panel Termination) shall consist of:

Housing 1 A or B	Output File #1
Mounting Cage 1	C1 Harness #1
Power Distribution Assembly #1*	Service Panel #1
Input Files I & J	Input Panel #1
Power Supply Assembly *	

1.1.2 Model 332B Cabinet (Pan Duct) shall consist of:

Housing 1 A or B	Output File #1
Mounting Cage 1	C1 Harness #1
Power Distribution Assembly #1*	Service Panel #1
Input Files I & J	Input Panel #2
Power Supply Assembly *	

1.1.3 Model 334 Cabinet (Ramp Meter) shall consist of:

Housing 1 A or B	PDA Assembly #3
Mounting Cage 1	C1 Harness #2
Input File I	Service Panel #1
Input Panel #3	

1.1.4 Model 336A Cabinet (2 to 8 Phase) shall consist of:

Housing 2	Output File #1
Mounting Cage 2	C1 Harness #3
Power distribution Assembly #2	Service Panel #2
Input File I	Input Panel #4

1.1.5 Model 336B Cabinet(2 to 4 Phase) shall consist of:

Housing 2	Output File #2 **
Mounting Cage 2	C1 Harness #3
Power Distribution Assembly #2	Service Panel #2
Input File I	Input Panel #4
Monitor Unit Assembly	

* The Contractor has the option to supply the Power Distribution Assembly #2 in lieu of the Power Supply and Power Distribution #1 Assemblies.

** A C1 Harness #3/Output File #2 Adaptor shall be provided.

1.1.6 All assemblies and files shall be mounted on the cage mounting rails per cabinet model detail. Cabinet model interface wiring shall be per specified C1 Harness, detailed wiring lists and required One Line Wiring.

6.1.2 Cabinet Shipping Requirements - The cabinet shall be delivered mounted on a plyboard shipping pallet. The pallet shall be bolted to the cabinet base. The cabinet shall be enclosed in a slipcover cardboard packing shell. The housing doors shall be blocked to prevent movement during transportation.

6.1.3 Cabinet Adaptors - When specified, adaptors shall be provided. The adaptor shall be fabricated of the same material and finish as the cabinet housing.

6.1.4 All bolts, nuts, washers, screws (size 8 or larger), hinges and hinge pins shall be stainless steel unless otherwise specified.

6.1.5 A cage mounting clear area for the controller unit shall be provided. The area shall extend 1.5 inches in front of and 16 inches behind the front EIA mounting angles.

6.1.6 All conductors, terminals and parts which could be hazardous to maintenance personnel shall be protected with suitable insulating material.

SECTION 2 HOUSING REQUIREMENTS

6.2.1 The housing shall include, but not be limited to, the following:

Enclosure	Police Panel
Doors	Ventilization
Latches/Locks	Gasketing
Hinges and Door Catches	Cage Supports and Mounting

6.2.2 Housing Construction

2.2.1 The housing shall be rainproof with the top of the enclosure crowned to prevent standing water. It shall have single front and rear doors, each equipped with a lock.

2.2.2 The enclosure, doors, lifting eyes, gasket channels, police panel, and all supports welded to the enclosure and doors shall be fabricated of 0.125 inch minimum thickness aluminum sheet. Bolted on supports shall be either the same material and thickness as the enclosure or 0.105 inch minimum steel. The side panels and filter shell shall be fabricated of 0.080 inch minimum thickness alumnum sheet.

2.2.3 All exterior seams for enclosure and doors shall be continuously welded and shall be smooth. All edges shall be filed to a radius of 0.03125 inch minimum. Exterior cabinet welds shall be done by gas Tungston arc TIG process only. ER5356 aluminum alloy bare welding electrodes conforming to AWS A5.10 requirements shall be used for welding on aluminum. Procedures, welders and welding operators shall conform to the requirements and practices in AWS B3.0 and C5.6 for alumimum. Internal cabinet welds shall be done by either gas metal arc MIG or gas tungston arc TIG Process.

2.2.4 Aluminum surfaces shall conform to the following:

2.4.1 An anodic coating shall be applied to the aluminum surface after the surface has been cleaned and etched. The cleaning and etching procedure shall be to immerse in inhibited alkaline cleaner at 71' C for 5 minutes (Oakite 61A, Diversey 909 or equivalent in mix of 6 to 8 ounces per gallon to distilled water). Rinse in cold water. Etch in a sodium solution at 66' C for 5 minutes (0.5 ounce sodium fluoride plus 5 ounces of sodium hydroxide mix per gallon to distilled water). Rinse in cold water. Desmut in a 50% by volume nitric acid solution at 20' C for 2 minutes. Rinse in cold water.

2.4.2 The anodic coating shall conform to MIL-A-8625C (Anodic Coatings for Aluminum and Aluminum Alloys) for Type II, Class I Coating except the outer housing surface coating shall have a 0.0007 inch minimum thickness and a 27 milligrams per square inch minimum coating weight. The

anodic coating shall be sealed in a 5% aqueous solution of nickel acetate (PH 5.0 to 6.5) for 15 minutes at 99' C.

2.2.5 The enclosure door frames shall be double flanged out on all 4 sides and shall have strikers to hold tension on and form a firm seal between the door gasketing and the frame. The dimension between the door edge and the enclosure external surface when the door is closed and locked shall be 0.156 (±0.08) inch.

2.2.6 Gasketing shall be provided on all door openings and shall be dust-tight. Gaskets shall be 0.25 inch minimum thickness closed cell neoprene or silicone (BOYD R-10480 or equal) and shall be permanently bonded to the metal. If neoprene is used the mating surface of the gasketing shall be covered with a silicone lubricant to prevent sticking to the mating metal surface. A Gasket Top Channel shall be provided to support the top gasket on the door (prevent gasket gravitational fatigue).

2.2.7 Cage bottom support mounting angles shall be provided on either side, level with the bottom edge of the door opening, for horizontal support and bolt attachment. In addition, side cage supports shall be provided for the upper cage bolt attachments. Spacer brackets between the side cage supports and the cage shall be a minimum thickness of either 0.188 inch aluminum or 0.105 steel.

2.2.8 The housing shall be provided with 2 lifting eyes for placing the cabinet on its foundation. Each eye opening shall have a minimum diameter of 0.75 inch. Each eye shall be able to support a weight load of 1000 pounds.

2.2.9 All exterior bolt heads shall be tamperproof type.

6.2.3 Door Latches and Locks

2.3.1 The latching handles shall have provision for padlocking in the closed position. Each handle shall be 0.75 inch minimum diameter stainless steel with a minimum 0.5 inch shank. The padlocking attachment shall be placed at 4.0 inches from the handle shank center to clear the lock and key. An additional 4.0 inches minimum gripping length shall be provided.

2.3.2 The latching mechanism shall be a three-point draw roller type. The pushrods shall be turned edgewise at the outward supports and have a cross section of 0.25 inch thick by 0.75 inch wide, minimum.

2.3.3 When the door is closed and latched, the door shall be locked. The locks and handles shall be on the left side of the front door and right side of the rear door. The lock and lock support shall be rigidly mounted on the door. In the locked position, the bolt throw shall extend a minimum of 0.25 +/- 0.03125 inch into the latch Cam area. A seal shall

be provided to prevent dust or water entry through the lock opening.

2.3.4 The locks shall be Corbin 2 type, or equal. One key shall be supplied with each lock. The keys shall be removable in the locked position only.

2.3.5 The locks shall have rectangular, spring loaded bolts. The bolts shall have a 0.281 inch throw and shall be 0.75 inch wide by 0.375 inch thick (tolerance is ±0.035 inch).

2.3.6 The center latch cam shall be fabricated of a minimum thickness 0.1875 inch steel or aluminum. The bolt surface shall horizonally cover the cam thickness. The cam shall be structured to only allow the door to open when the handle is moved toward the center of the door.

2.3.7 Rollers shall have a minimum diameter of 0.875 inch with nylon wheels and steel ball bearings.

6.2.4 The housing ventilation including intake, exhaust, filtration, fan assembly and environmental control are as follows:

2.4.1 The front door shall be provided with louvered vents. The louvered vent depth shall be a maximum of 0.25 inches. A removeable and reuseable air filter shall be housed behind the door vents. The filter filtration area shall cover the vent opening area. A filter shell shall be provided that fits over the filter providing mechanical support for the filter. The shell shall be louvered to direct the incoming air downward. The shell sides and top shall be bent over a minimum of 0.25 inches to house the filter. The filter resident in its shell shall be held firmly in place with a bottom bracket and a spring loaded upper clamp. No incoming air shall bypass the filter. The bottom filter bracket shall be formed into a waterproof sump with drain holes to the outside housing.

2.4.2 The intake (including filter with shell) and exhaust areas shall pass a minimum of 60 cubic feet of air per minute for housing #1 and 26 cubic feet of air per minute for housing #2.

2.4.3 The housing shall be equipped with an electric fan with ball or roller bearings and a capacity of at least 100 cubic feet of free air delivery per minute. The fan shall be mounted within the housing and vented.

2.4.4 The fan shall be thermostatically controlled and shall be manually adjustable to turn on between 33′ C and 65′ C with a differential of not more than 6′ C between automatic turn on and off. The fan circuit shall be protected at 125% of the fan motor ampacity. The manual adjustment shall be graded in 10′ C increment scale.

2.4.5 The filter shall be 16 inches wide by 12 inches high by 0.875 inches thick. The filter shall be a ECO-AIR Products E35S or equal.

6.2.5 Hinges and Door Catches

2.5.1 Two-bolt per leave hinges shall be provided to bolt the enclosure to the door. Housing 1 shall have 4 hinges and Housing 2 three hinges. Each hinge shall be 3.5 inches minimum length and have a fixed pin. The pin ends shall be welded to the hinge and ground smooth. The pins and bolts shall be covered by the door edge and not accessible when the door is closed.

2.5.2 Front and rear doors shall be provided with catches to hold the door open at both 90 and 180 +/- 10 degrees. The catch minimum diameter shall be either 0.375 inch for plated steel or aluminum rods or 0.25 inch for Stainless steel. The catches shall be capable of holding the door open at 90 degrees in a 60 mph wind acting at an angle perpendicular to the plane of the door.

6.2.6 Police Panel

2.6.1 A police panel assembly shall be provided to allow the police officers limited access to intersection control. The police panel assembly including switches shall not extend into the cabinet more than 1.5 inches.

2.6.2 The police panel door shall be equipped with a lock. The lock shall be keyed for a master police key. One key shall be furnished with each police lock. Each police key shall have a shaft at least 1.75 inches in length.

2.6.3 The police panel shall contain 2 DPST Toggle Power Switches.

6.3.1 Model 334 - One switch shall be labeled "ON-OFF LIGHTS" and the other "POLICE CONTROL ON-OFF".

6.3.2 Models 332 and 336 - One switch shall be labeled "ON-OFF" and the other "FLASH/AUTOMATIC".

2.6.4 The front and back of the panel shall be enclosed with a rigid metal covering so that no parts having line voltage are exposed.

2.6.5 The panel assembly shall have a drain to prevent water collecting within the assembly. The drain shall be channeled to the outside.

SECTION 3 CABINET CAGE REQUIREMENTS

6.3.1 A standard EIA 19-inch rack cage shall be installed inside the housing for mounting of the controller unit and cabinet assemblies.

6.3.2 The EIA rack portion of the cage shall consist of 2 pairs of continuous, adjustable equipment mounting angles. The angle nominal thickness shall be either 0.1345 inch plated steel or 0.105 Stainless Steel. The angles shall be tapped with 10-32 threads with EIA universal spacing. The angle shall comply with Standard EIA RS-310-B and shall be supported at the top and bottom by either welded or bolted support angles to form a cage.

6.3.3 Clearance between rails for mounting assemblies shall be 17.75 inches.

6.3.4 2 steel supporting angles extending from the front to the back rails shall be supplied to support the controller unit. The angles shall be designed to support a minimum of 50 pounds each. The horizontal side of each angle shall be a minimum of 3 inches. The angles shall be vertically adjustable.

6.3.5 The cage shall be bolted to the cabinet at 4 points, via the housing cage supports and associated spacer brackets, 2 at the top and 2 at the bottom of the rails.

6.3.6 The cage shall be centered within the cabinet.

SECTION 4 - CABINET ASSEMBLIES

6.4.1 General

4.1.1 The following equipment shall be completely removeable from the cabinet without removing any other equipment and using only a slotted or Phillips screw driver:

Power Supply Assembly
Power Distribution Assembly
Input File
Output File
Monitor Unit Assembly

4.1.2 All fuses, circuit breakers, switches (except Police Panel Switches and Fan Fuse) and indicators shall be readily visible and accessible when the cabinet front door is open.

4.1.3 All equipment in the cabinet, when required, shall be clearly and permanently labeled. The marker strips shall be made of material that can be easily and legibly written on using a pencil or ballpoint pen. Marker strips shall be located immediately below the item they are to identify and must be clearly visible with the items installed.

4.1.4 Resistor-capacitor transient suppression shall be provided at all AC relay sockets (across relay coil) except for the Flash Transfer Relays (FTR) in the output files where one suppression device may be common for all.

4.1.5 A leakage resistor, which permits a small amount of current to pass through the heavy duty relay coil, shall be installed across the terminals of relay sockets to overcome the residual magnetism.

4.1.6 Assembly or file depth dimension shall include terminal blocks.

4.1.7 All assemblies and files shall allow air circulation through its top and bottom unless specifically called out otherwise.

4.1.8 Socket types for the following equipment shell be:

Switch Pack	BEAU S-5412-XX (or equal)
Heavy Duty Relay	BEAU S-5408-XX (or equal)
Flasher Unit & Power Sup Mod	BEAU S-5406-XX (or equal)
208 Monitor Unit	PCB 22/44S
210 Monitor Unit	PCB 28/56S

4.1.9 Connector sockets for Flasher Unit, Power Supply, and Switch Pack modules shall be mounted with their front face 7.5 inches deep from assembly or file front panel (Note Output File Exception).

4.1.10 Guides (Top and Bottom) shall be provided for Switch Pack Modules, Flasher Units, Monitor Unit, Watchdog Timer Module, Detector & Isolator Modules, and Power Supply Module (Bottom only). The guides shall begin 1.0 +/- 0.5 inches in from front panel surface and extend to within 0.5 inches from the connector socket face.

4.1.11 Assemblies and Files shall be fabricated of 0.060 inch minimum thickness aluminum or stainless steel sheet. The metal surface shall be treated with clear chromate.

6.4.2 Power Supply Assembly

4.2.1 A power supply shall be provided to supply +24 VDC to the Input and Output Files for use by their associated devices. The power supply shall be of ferro-resonant design having no active components and conform to the following requirements:

2.1.1 Line Regulation - 2% from 90 to 135 VAC at 60 Hz, plus an additional 1.6% for each additional 1.0% frequency change.

2.1.2 Load Regulation - 5% from 1 ampere to 5 amperes with a maximum temperature rise of 30' C above ambient.

2.1.3 Design Voltage - +24 +/- 0.5 VDC at full load, 30' C, 115 VAC incoming after a 30 minute warmup period.

2.1.4 Full Load Current - 5 amperes, minimum.

2.1.5 Ripple Noise - 2 volts peak-to-peak and 500 millivolts RMS at full load.

2.1.6 Line Voltage - 90 to 135 VAC.

2.1.7 Efficiency - 70% minimum.

2.1.8 Minimum Voltage - +22.8 VDC.

2.1.9 Circuit capacitors shall be rated for 40 volts, minimum.

4.2.2 The assembly shall have a maximum depth of 5.5 inches.

4.2.3 The front panel shall include AC and DC fuses, power ON light and test points for monitoring the output voltages.

4.2.4 The assembly including terminals shall be protected to prevent accidental contact with energized parts.

4.2.5 The power supply cage and transformer shall be securely braced to prevent damage in transit.

6.4.3 Power Distribution Assembly

4.3.1 The following equipment shall be provided with the power distribution assemblies:

3.1.1 PDA #1

1 -- Duplex NEMA 5-15R Controller Receptacle
2 -- Duplex NEMA 5-15R Equipment Receptacle (one with GFI)
1 -- 1 Pole 50 Amperes minimum, 120 VAC Main Circuit Breaker
1 -- 1 Pole 15 Amperes, 120 VAC Equipment Circuit Breaker
1 -- 6 Pole Ganged, 15 Amperes, 120 VAC Signal Bus Circuit Breaker
1 -- 2 Pole Ganged, 20 Amperes, 120 VAC Flash Bus Circuit Breaker
1 -- Mercury Contactor - rated minimum 60 Amperes, 120 VAC
2 -- Model 204 Flasher Unit and Socket
1 -- AUTO/FLASH Control Switch
1 -- FLASH Indicator Light
1 -- Model 430 Heavy Duty Relay (Transfer Relay) & Socket
2 -- 10 Position Terminal Blocks (TBK) T1 & T2

3.1.2 PDA #2

1 -- Duplex NEMA 5-15R Controller Receptacle
2 -- Duplex NEMA 5-15R Equipment Receptacle (one with GFI)
1 -- 1 Pole 50 Amperes minimum, 120 VAC Main Circuit Breaker
1 -- 6 Pole Ganged, 15 Amperes, 120 VAC Signal Bus Circuit Breaker*
1 -- 2 Pole Ganged, 20 Amp, 120 VAC Flash Bus Circuit Breaker
1 -- Mercury Contactor - rated minimum 60 Amperes, 120 VAC
2 -- Model 204 Flasher Unit and Socket
1 -- Model 206 Power Supply Module and Socket
1 -- Model 430 Heavy Duty Relay & Socket (Transfer Relay)*
1 -- AUTO/FLASH Control Switch
1 -- Flash On Indicator Light
3 -- 10 Position TBK T1, T2 & T4
1 -- 4 Position TBK T3

OR * Circuit Breaker Option

3.1.3 PDA #3

1 -- Duplex NEMA 5-15R Controller Receptacle
2 -- Duplex NEMA 5-15R Equipment Receptacle

1 -- 1 Pole 30 Amperes, 120 VAC Main Circuit Breaker
3 -- 1 Pole 15 Amperes, 120 VAC Circuit Breaker (Equip & Field)
1 -- Model 206 Power Supply Module and Socket
1 -- Model 208 Monitor Unit and Socket
1 -- Model 430 Heavy Duty Relay and Socket (Transfer Relay)
1 -- Watchdog Timer ON/OFF-RESET Control Switch
3 -- Model 200 Switch Pack Sockets
3 -- 10 Position TBK T1, T2 & T4
1 -- 4 Position TBK T3

4.3.2 Rating of breakers shall be shown on face of breaker or handle. Breaker function shall be labeled below breakers on front panel.

4.3.3 The first equipment receptacle in the circuit shall have ground-fault circuit interruption as defined in the National Electrical Code. Circuit interruption shall occur on 6 ma of ground-fault current and shall not occur on less than 4 ma of ground-fault current.

4.3.4 The AUTO/FLASH Switch when placed in FLASH position (down), shall energize the Mercury Contactor (MC) Coil. When the switch is placed in the AUTO Position (up) the switch packs shall control the signal indications. The switch shall be a SPST Toggle Control Switch.

4.3.5 The FLASH Indicator Light labeled "Flash On" shall be mounted on the PDA Front Panel. The lamp shall be driven by Flasher Unit/Output through Flash Relay Circuit No. 1 or per Circuit Breaker Option.

4.3.6 All conductors from the power distribution assembly routed to the cabinet wiring shall be connected to the terminal block on the common side, except for the AC power conductor between the service terminal block and main circuit breaker. All internal conductors terminating at the blocks shall be connected to the other side of the blocks.

4.3.7 Ganged Circuit Breakers shall be certified by the circuit breaker manufacturer that their circuit breakers shall gang trip.

4.3.8 The Monitor Unit ON/OFF-RESET Switch shall be a DPST Toggle Control mounted on the PDA #3 front panel. When placed in DOWN Position (OFF-RESET) a grounded input shall be presented at the Monitor Unit Pin 22 (reseting the WDT Circuitry) and the otherside switch circuit close bypassing the Monitor Unit.

3.9 Circuit Breaker Option

3.9.1 Six Single Pole 15 Ampere Circuit Breakers with

Auxiliary Switch Feature and Medium Trip Delay Characteristic shall be provided.

3.9.2 The six breakers shall be wired and routed per the Option One Line Diagram. The breaker auxilary switch circuit shall be open when the breaker is in ON Position. The auxiliary circuits shall be wired in parallel so that any tripped breaker shall energize the Mercury Contactor Coil, Flash Transfer Relay Coils and the "FLASH ON" Indicator. The Auxiliary Contacts shall be rated at 5 Amperes, 120 VAC Minimum (fast on type connection).

4.3.10 Model 206 Power Supply Module

3.10.1 The module shall meet the requirements specified in 6.4.2.1 and 6.4.2.3.

3.10.2 The module chassis shall be vented. Its top and sides shall be open except for unit supports.

3.10.3 When resident in the PDA assembly the module shall be held firmly in place by its stud screw, assembly connector support panel and a wingnut.

3.10.4 Two 0.5 ohm, 10 watt minimum wire-wound power resistors with a 0.2uH inductance shall be provided (1 on the AC+ power line and 1 on the AC- line). Three MOV surge arrestors rated for 20 Joules minimum shall be supplied between AC+ and EG, AC- and EG, and between AC+ and AC-. A 0.68uF capacitor shall be placed across AC+ and AC- between the two power resistors and the MOV's.

4.3.11 Terminal screw size shall be 10-32 for TBK T1,T2 & T4 and 6-32 for TBK T3.

6.4.4 Input File

4.4.1 The file shall have a maximum depth of 8.5 inches and shall intermate with and support 14 two-channel detector sensor or isolator units.

4.4.2 The file shall provide a PCB 22/44S connector centered vertically for each two-channel detector. The associated number and letter side connectors shall be shorted internally. Pins D, E, F, J, K, L and W shall be brought out to a 8 position terminal block on the back of the file. The output emitters shall be common grounded with the ground terminating at TB 15, Position 4. Position 8 of the terminal block is assigned to Equipment Ground and is used to terminate lead in shields.

4.4.3 The input file shall be provided with marker strips to

identify isolators and detectors in the file.

4.4.4 TBK terminal screw size shall be 8-32.

6.4.5 Output File

4.5.1 General Requirements

5.1.1 The Output File shall be provided with marker strips to identify switch packs when mounted in the file.

5.1.2 Switch pack connectors, monitor unit connectors, flash transfer relay sockets and flash programming connectors shall be accessible from the back of the Output File without the use of tools or removal of any other equipment.

5.1.3 TBK 01 and 03 terminal positions shall be labeled functionally. A permanent label reading "Channels 9 & 10 Separated" placed on the right Output File mounting flange.

5.1.4 Field wire terminal blocks shall be mounted vertically on the back of the assembly. Output File #1 shall have 3 terminal blocks with 12 positions and Output File #2 shall have 3 terminal blocks with 6 positions. Terminal position screw size shall be 10-32.

5.1.5 The Flash Transfer Relays shall be Heavy Duty Type. The coil of the relay shall be energized only when the signals are in flashing operation and the police panel ON/OFF switch is ON. The relay shall transfer the field outputs from switch pack output to flash control The transfer shall not interrupt the controller unit operation.

5.1.6 The depth of the file shall not exceed 14.5 inches.

5.1.7 The flash programming connectors shall be Molex Type 1375 or equal. The receptacle shall be mounted on the file with a programmable plug connected. The plug connector, with programming jumpers, shall be furnished for each circuit to allow red or yellow flash programming. Plug pins shall be crimped and soldered.

5.1.8 TBK 01 and 03 terminal screw size shall be 8-32 and TBK 02 & 04 shall be 6-32.

4.5.2 Output File #1

5.2.1 The output file shall be capable of containing 12 Model 200 Switch Packs, 4 Flash Transfer Relays, and the Model 210 Monitor Unit. Four Flash Transfer

Relays and 1 Model 210 Monitor Unit shall be furnished with each output file.

5.2.2 The red and yellow output circuits of switch packs 1, 2, 3, 4, 5, 6, 7 and 8 shall be made available at individual pack Molex receptacle /plug connection for flash selectability. Eight red & 4 yellow Molex Plugs shall be provided.

5.2.3 It shall be possible to remove the Model 210 Monitor Unit without causing the intersection to go into flashing operation. The cabinet shall be wired so that with the front cabinet door closed and with the monitor unit removed, the intersection shall go into flashing operation. (See One Line Diagram). The cabinet shall contain a conspicuous warning against operation with the Model 210 Monitor Unit removed.

5.2.4 The monitor unit compartment including the housed Model 210 Monitor Unit exclusive of handle shall extend no farther than 1.25 inches in front of the 19 inch rack front surface. The switch pack socket connector front surface shall be no more than 8.5 inches in depth from the front surface of the output file.

4.5.3 Output File #2 (Model 420)

5.3.1 The Output File #2 shall be capable of containing 6 Model 200 Switch Packs and 2 Flash Transfer Relays. Two Flash Transfer Relays shall be provided with the file.

5.3.2 The red and yellow output circuits of Switch Packs No. 1, 2, 4 and 5 shall be made available at a Molex receptacle/plug connection for flash selectability.

6.4.6 Heavy Duty Relay (Model 430)

4.6.1 Heavy duty relays shall be the electromechanical type designed for continuous duty.

4.6.2 Each relay shall be enclosed in a removable, clear plastic cover. The manufacturer's name, electrical rating and part number shall be placed on the cover. They shall be permanent, durable and readily visible.

4.6.3 Each relay shall be provided with DPDT contacts. Contact points shall be of fine silver, silver alloy or superior alternative material. Contact points and arms shall be capable of switching a 20 ampere at 120 VAC tungsten load per contact once every 2 seconds with a 50% duty cycle for at least 250,000 operations without contact welding or excessive burning, pitting or cavitation.

4.6.4 The relay coil shall have a power consumption of 10 volt-amperes maximum.

4.6.5 Each relay shall withstand a potential of 1500 VAC at 60 Hz between insulated parts and between current carrying or noncarrying parts. Each relay shall have a 1 cycle surge rating of 175 amperes RMS.

6.4.7 Side Panels

4.7.1 Two panels shall be provided and mounted on the cage parallel to the cabinet sides. In viewing from the back door, the left side panel shall be designated as the "Input Panel" and the right side panel shall be designated as the "Service Panel".

6.4.8 Cabinet Harnesses

4.8.1 The C1 Harness shall be a minimum of 4 feet in length. The harness wire bundle shall be provided with external protection and routed on the Input Panel Side of the cabinet. Adequate length shall be provided to allow the C1P Connector to properly connect any State Approved Model 170 Controller Unit mounted in the cabinet.

4.8.2 One end of the C1 Harness shall be the C1P Connector with pin contacts wired per the detail assignment. The other ends of the harnesses shall terminate as follows:

Harness #1 - C4S Connector (connected to C4P on Output File #1)
C5S Connector (connected to C5P on either the Input Panel or Output File #2)
Assigned Input Files I & J Positions and Logic Ground Bus

Harness #2 - C5S Connector (same as Harness #1)
C6S Connector (connected to C6P on Output/PDA Assembly)
Assigned Input File I Positions and Logic Ground Bus

Harness #3 - C4S Connector (same as Harness #1)
Assigned Input File I Positions, Input Panel Terminal Block and Logic Ground Bus

4.8.3 C1 Harness #3/Output File #2 Adaptor shall be comprised of a C4P Connector on one end and a C5S on the other. The adaptor shall interface the first 24 pins of C4 Connector to the 24 pins of C5.

4.8.4 Conductors between the C1 Connector and the Input

File(s) shall be of adequate length to allow any conductor to be connected to any detector output terminal (Positions S, F, or W).

6.4.9 Monitor Unit Assembly (For Model 336B)

4.9.1 The monitor unit assembly shall be 1.75 inches high and a maximum of 17.0 inches wide. The assembly shall house the Model 210 Monitor Unit (horizontally). A Model 210 Monitor Unit shall be furnished with each assembly.

4.9.2 The assembly shall have a vertical opening of 1.5 inches on the front panel for Model 210 insertion/removal. PCB edge guides shall be provided for monitor unit support and to guide it into its mating connector socket.

4.9.3 An 10 position terminal block (M1) shall be provided on the back plane of the assembly. Position assignment, left to right, shall be as follows:

Position 1 -- +24 VDC
Position 2 -- DC Ground
Position 3 -- External Reset
Position 4 -- WDT In
Position 5 -- STOPTIME Output
Position 6 -- Door Switch (Unit Resident)
Position 7 -- Mercury Contactor Coil (To PDA)
Position 8 -- AC+
Position 9 -- AC-
Position 10 -- Equipment Ground

4.9.4 A 37 pin circular plastic connector, matching C4P requirements, shall be provided and mounted rigidly on the back of the assembly. Pin assignments shall be as follows:

PIN	CHANNEL/FUNCTION	PIN	CHANNEL/FUNCTION	PIN	CHANNEL/FUNCTION
1	1 GREEN	12	6 YELLOW	23	12 GREEN
2	1 YELLOW	13	7 GREEN	24	12 YELLOW
3	2 GREEN	14	7 YELLOW	25	13 GREEN
4	2 YELLOW	15	8 GREEN	26	13 YELLOW
5	3 GREEN	16	8 YELLOW	27	14 GREEN
6	3 YELLOW	17	9 GREEN	28	14 YELLOW
7	4 GREEN	18	9 YELLOW	29	15 GREEN
8	4 YELLOW	19	10 GREEN	30	15 YELLOW
9	5 GREEN	20	10 YELLOW	31	16 GREEN
10	5 YELLOW	21	11 GREEN	32	16 YELLOW
11	6 GREEN	22	11 YELLOW	33	AC-

NOTE: PINS 34 TO 37 NOT ASSIGNED

SECTION 5 - CABINET WIRING

6.5.1 Cabinet Wiring Diagram

5.1.1 Four sets of nonfading (comparable to Xerox 2080) cabinet wiring diagrams shall be supplied with each cabinet. The diagrams shall be nonproprietary. They shall identify all circuits in such a manner as to be readily interpreted. The cabinet drawing shall show the equipment layout in an elevation view as viewed from the rear of the cabinet with the left and right cabinet walls shown in their relative positions. The diagrams shall be placed in a heavy duty side opening clear plastic pouch and attached to the front cabinet door. The pouch shall be of such design and material that it provides adequate storage and access to the wiring diagram and manual.

5.1.2 Two cabinet manuals shall be provided in the pouch together with the wiring diagram sets. The pouch shall be of size and strength to easily hold the documents and keys without tearing.

6.5.2 Conductors

5.2.1 All conductors used in cabinet wiring shall terminate with properly sized non-insulated (if used, for DC Logic Only) or clear insulated spring-spade type terminals except when soldered to a through-panel solder lug on the rear side of the terminal block or as specified otherwise. All crimp-style connectors shall be applied with a power tool which prevents opening of the handles until the crimp is completed.

5.2.2 Conductors between the service terminal AC- and Equipment Ground and their associated bus, the equipment ground bus conductor to Power Distribution Assembly and cage rail, AC-Bus to Power Distribution Assembly shall be No. 8 or larger.

5.2.3 All conductors unless otherwise specified shall be No. 22, or larger, with a minimum of 19 copper strands. Conductors shall conform to Military Specification: MIL-W-16878D, Type B, or better. The insulation shall have a minimum thickness of 10 mils and shall be nylon jacketed polyvinyl chloride except that Conductors No. 14 and larger may have Type THHN insulation (without Nylon Jacket), and shall be stranded with a minimum of 7 copper strands.

5.2.4 All conductors, except those which can be readily traced, shall be labeled. Labels attached to each end of the conductor shall identify the destination of the other end of the conductor.

5.2.5 All conductors shall conform to the following color-code

State of California
Qualified Products List

Controller Assemblies for the Model 170/2070 Traffic Controller

The assemblies listed below have been tested by the California Department of Transportation Laboratory and found to be compliant to the *Traffic Signal Control Equipment Specifications* (TSCES), dated January 1989, and applicable addendum, and the Transportation Electrical Equipment Specifications (TEES), dated August 16, 2002, plus Errata 1 dated October 27, 2003 and Errata 2 dated June, 08, 2004 and applicable addendum.

When these assemblies are to be purchased, only those listed below will be considered.

Qualifier to Qualified Products List (QPL)

A manufacturer's listing on the QPL does not waive any of the requirements of the specifications or relieve the manufacturer/vendor of any obligation thereunder. Defective work, materials and equipment will be rejected.

In short, all equipment submitted must comply with current specifications.

Model 170E Controller Unit

Automatic/Eagle Signal	Model: AAZ11516P001
Dynamic Traffic Systems (Dynatrol)	Model: 170E with 412
Topping Electronics, LTD	Model: 170E
McCain, Inc.	Model: M11347
Phillips/Sisson Industries, Inc. (PSI)	Model: 170E-0000
Safetran Traffic Systems Incorporated	Model: 289447A170

Model 2070L Controller Unit

Econolite Control Products, Inc. (image version 1.01.08.02b) (Errata 1 dated 10/27/03 & Errata 2 dated 6/8/04)
Eagle Traffic Control Systems (image version 6.2.0.0.0.81) (Errata 1 dated 10/27/03 & Errata 2 dated 6/8/04)
Naztec, Inc (Errata 1 dated 10/27/03 & Errata 2 dated 6/8/04)
Quixote Traffic Corporation (image version 1.03e) (Errata 1 dated 10/27/03 & Errata 2 dated 6/8/04)
McCain, Inc. (image version 1.6) (Errata 1 dated 10/27/03 & Errata 2 dated 6/8/04)

Model 2070-6A Modem

General Devices, Incorporated (GDI)
Eagle Traffic Control Systems

Model 2070-6B Modem

General Devices, Incorporated (GDI)

Model 2070-7A Serial Comm. Card

Eagle Traffic Control Systems
Econolite
McCain, Inc.
Naztec, Inc.
Quixote Traffic Corporation

Model 200 Switch Packs

General Devices, Incorporated (GDI) Rev. A
Perfect Distribution Control (PDC) --- SSS-88
Traffic Sensor Corporation (TSC) --- 83A059A (C/N SP4200)

Model 204 Flashers

General Devices, Incorporated (GDI) Rev A
Perfect Distribution Control (PDC) --- SSF-88
Traffic Sensor Corporation (TSC) (C/N FU 4204)

Model 206 Power Supply Module

Eagle Traffic Control Systems
McCain, Inc.
Phillips / Sisson Industries, Inc. (PSI)
Safetran Traffic Systems, Incorporated
Traffic Sensor Corporation (TSC)

Model 208 Monitor Unit

McCain, Inc.
Safetran Traffic Systems Incorporated

Model 210 Monitor Unit

Eberle Design Incorporated (EDI)
Phillips / Sisson Industries, Inc. (PSI)
Solid State Devices (SP20) (SP22) (SP32)

Model 222 Two-Channel Loop Detectors

Detector Systems Incorporated
Diablo Engineering (DSP 222)
Eberle Design Incorporated (EDI)
Northstar Controls, LLC
Reno A&E (Model G)(rev. 5 w/audible detect buzzer)

Model 231 Magnetic Detector Element

M-Systems
TEECO Safety Incorporated (311-M)

Model 242 Two-Channel DC Isolators

Detector Systems Incorporated
Eberle Design Incorporated (EDI)
General Devices, Incorporated (GDI) --- DIM242
Perfect Distribution Control (PDC) --- DCI-82
Traffic Sensor Corporation (TSC)

Model 252 Two-Channel AC Isolators

General Devices, Incorporated (GDI) --- 252CA
Perfect Distribution Control (PDC) --- ACI-88
Traffic Sensor Corporation (TSC)

Model 332A Cabinets

Eagle Traffic Control Systems
US Traffic Corporation
McCain, Inc.
Phillips / Sisson Industries, Inc. (PSI)
Safetran Traffic Systems, Incorporated
Temple, Inc.

Model 334C Cabinets

McCain, Inc.
Safetran Traffic Systems, Incorporated

Model 400 Modems

General Devices, Incorporated (GDI) Rev E
General Devices, Incorporated (GDI) Rev F
Perfect Distribution Control (PDC) - MDM 97

Model 412 Program Module

Automatic / Eagle Signal - 412C
Dynamic Traffic Systems (Dynatrol) 412C
McCain, Inc. - 412C
Phillips / Sisson Industries, Inc. (PSI)
Safetran Traffic Systems, Incorporated --- 412C
Topping Electronics, Incorporated - 412C

PDA2 (Power Distribution Assembly)

McCain, Inc.
Phillips / Sisson Industries, Inc. (PSI)
Safetran Traffic Systems, Incorporated
Traffic Sensor Corporation (TSC)

PDA3 (Power Distribution Assembly

McCain, Inc.
Safetran Traffic Systems, Incorporated

The effective period of this QPL is indeterminate. Manufacturers are required to notify the 170 / 2070 Program Coordinator of any proposed changes affecting design or performance in the product that has been approved. THIS INCLUDES ALL COMPONENTS LISTED IN MANUALS AND ALL ENGINEERING CHANGES.

Manufacturers, not on the list, who want their assemblies or units tested so as to be added to the QPL for future bids should submit a written request to the 170 / 2070 Program Coordinator.

Failure to perform satisfactorily on purchase orders by failing to meet delivery schedules or maintain a high rate of acceptance will result in being removed from the QPL.

DAVID SONG
170 / 2070 CONTROLLER & CABINET
Program Coordinator
Phone: (916) 654-4591
Fax: (916) 654-5452
david_song@dot.ca.gov

CALIFORNIA DEPARTMENT OF TRANSPORTATION

TRAFFIC OPERATIONS

HERASMO INIGUEZ
Sr. TEES
ITS Project and Standards
Phone: (916) 653-2011
Fax: (916) 653-2144
herasmo_iniguez@dot.ca.gov

Solicitation 56736

DEPARTMENT OF TRANSPORTATION
CHANGEABLE MESSAGE SIGN
SPECIAL PROVISIONS

SPECIFICATIONS:

All equipment shall be furnished in accordance with the State of California, Department of Transportation (Caltrans).

Transportation Electrical Equipment Specifications (TEES) dated August 16, 2002

TEES Chapter 8 Specifications for Changeable message Sign Systems dated Feb. 2003

Model 170E Controller to be supplied by vendor, for testing purposes only, from the Caltrans Qualified Products list of Vendors.

Model 334C cabinets must be supplied from the Caltrans Qualified Products list of Vendors.

1. Preliminary Engineering Mechanical and Electrical Drawings and parts Procurement list shall be available for the State's review within twenty-days (20) calendar days after bid award date.

2. Model 500 CMS shall be delivered with option 2-light Emitting Diodes (LED's)

3. Install both Controller Interface Assemblies (CIAS) in the CMS Control Cabinet Pages 8-1-3, Paragraph 8.1.10

4. No screens or screen racks required

5. Access Holes for Harness 4 and 5 shall be at the rear of the Controller compartment

6. Identification Plates of the CMS units shall be displayed on a metal plate attach to the inside and out side of the left power door panel and outside upper right side of the CMS.

7. Plate to be 3" x 5" with the Manufacture, Model, Type, Serial Number stamped in 2" letters. Serial Numbers shall start with the year, month and unit serial number.

   Sample year, month, and unit serial number.
   Year; 2007 will start with Seven (07)
   Unit Serial Number = 1 through 50 in sequence
   Example:
   Manufacture: ABC
   Model : 500 Type: LED
   071201 = (Year,Month and Unit Serial Number)

Solicitation 56736

DEPARTMENT OF TRANSPORTATION
CHANGEABLE MESSAGE SIGN
SPECIAL PROVISIONS

PRE-PRODUCTIONS VISITS

"Pre-Production inspection meeting(s)" shall occur before actual production begins and shall be conducted at the manufacturer's facility. During the visit, the manufacturer shall have a unit available for evaluation. The purpose of the meeting will be to ensure that all aspects of the specification and contract are clearly understood by both the state and the manufacturer prior to final testing of each lot of CMS systems before shipping to the Caltrans warehouse. A minimum of two (2) maximum of three (3) visits may be required depending on the circumstances of each visit. Each visit shall last approximately 5 days at the manufacturer's facility. If more visits are required it will be in agreement with the vendor and state. Refer to "VENDOR COST RESPONSIBILITIES"

FINAL TESTING REQUIREMENTS

During final compliance testing, visits by one (1) maximum of two (2) engineers depending on the circumstances. Electrical engineers from the Translab shall meet at the manufacturer's facility for the purpose of inspecting and testing during critical phases prescribed by the manufacturer and concurred by the State of California engineers. Each Visit shall be for 5 working days for each shipment, if more time is required per shipment it will be in agreement with the vendor and State. The vendor shall provide a five (5) working days notice to the State of California engineers for any schedule deviation of schedule. Refer to "VENDOR COST RESPONSIBILITIES".

DELIVERY SCHEDULE – (Awarded to 1 Vendor)

First delivery shall be within 120 days of the Approved Purchase Request Order (APRO).

Deliveries shall be five (5) Shipments: **The Left Hand Model 510 CMS Systems to be shipped on the first delivery.**

Shipment	Quantity	Right Hand	Left Hand	Due Date/Days APRO
1st	10		10 (Model 510)	120
2nd	10	10 (Model 500)		240
3rd	10	10 (Model 500)		270
4th	10	10 (Model 500)		300
5th	10	10 (Model 500)		330

Solicitation 56736

DEPARTMENT OF TRANSPORTATION
CHANGEABLE MESSAGE SIGN
SPECIAL PROVISIONS

DELIVERY SCHEDULE - (Awarded to 2 Vendors)

Vendor 1: First delivery shall be within 120 days of the Approved Purchase Request Order (APRO).

Deliveries shall be four (4) Shipments:

Shipment	Quantity	Right Hand	Left Hand	Due Date/Days APRO
1st	10	10 (Model 500)		120
2nd	10	10 (Model 500)		150
3rd	10	10 (Model 500)		180
4th	10	10 (Model 500)		210

Vendor 2: First delivery shall be within 120 days of the Approved Purchase Request Order (APRO).

Delivery shall be one (1) Shipment:

Shipment	Quantity	Left Hand	Due Date/Days APRO
1st	10	10 (Model 510)	120

VENDOR COST RESPONSIBILITIES

1. Travel Expenses

   The manufacturer shall provide all reasonable expenses for travel to and from the facility for lodging, meals and car rentals for a minimum of one (1) maximum of two (2) Caltrans engineers. Each visit shall be in accordance with the pre-inspection and final testing requirements as stated, above at the manufacturer's facility. In addition, all reasonable expenses for one (1) DGS employee shall be provided for one (1) Pre-production and one (1) Final testing visit.

2. Pre-Paid Shipment Authorization

   The vendor shall provide a pre-paid return shipment authorization to the supplier by common carrier for any rejected, damaged, defective, failed units or whole lots for each shipment lot unless the supplier notifies the Department of Transportation Laboratory, that the supplier will pick up rejected items within 5 working days of notifications or what is agreed with the state and vendor.

Solicitation 56736

DEPARTMENT OF TRANSPORTATION
CHANGEABLE MESSAGE SIGN
SPECIAL PROVISIONS

DELIVERIES

Supplier shall provide notices to the State Warehouse a minimum of three (3) business days in advance of delivery of CMS units. This will allow time to arrange material handling equipment on-site for unloading. The persons to contact are:

1. William Voelker	(916) 324-1223	Fax (916) 322-7016	William Voelker@dot.ca.gov
2. Greg Pealer	(916) 324-1173	Fax (916) 322-7016	Greg Pealer@dot.ca.gov
3. Robert Ruiz	(916) 445-3169	Fax (916) 327-0688	Robert Ruiz@dot.ca.gov

Unless otherwise specified, delivery will be to:
California Department of Transportation
2001 Evergreen Street
Sacramento, CA. 95815

EQUIPMENT REQUIREMENTS (Supplied by the Manufacturer at the test site)

1. Portable Computer

   A portable personal computer (PC) shall be made available only for final compliance testing at the manufacturer's location. After all CMS Systems are in compliance the portable computer will be returned to the manufacturer location. The PC shall be adequate for systems testing, adjustments, programming, on-site direct data downloading, and off-site down loading and testing of the CMS systems with software and cables to facilitate these functions. The portable PC shall have, as a minimum, IBM ThinkPad T60 - T2500(2GHz), 1GB RAM, 100GB 5400rpm HD, 15in 1400x1050 LCD, 128MB ATI Radeon X1400, CDRW/DVDRW, Intel 802.11abg wireless, Bluetooth/Modem, 1Gb Ethernet, UltraNav, Secure chip, Fingerprint reader, 6c Li-Ion batt, Windows 98. Unit shall be furnished with all cables, adapters and a suitable carrying case. Caltrans Software applications (SignView 3.1) shall be available for testing CMS Systems.

2. Model 170E Controller

   A Model 170E controller shall be made available for testing purposes at the manufacturer's location. After all CMS Systems are in compliance the 170E controller will be returned to the manufacturer location. The Model 170E Controller used for testing shall consist of items listed in the TEES, Chapter 2, Section 2, Page 2-2-1, Item 2.2.2.1 and must be supplied from the Caltrans Qualified Products list of Vendors who have had their product tested and approved by California Department of Transportation Laboratory.

FOR FUTURE BIDS, MANUFACTURERS MAY CONTACT JIM RHODES AT (916) 227-0300 FOR INFORMATION REGARDING THE EVALUATION AND TESTING PROCESS.

Solicitation 56736

DEPARTMENT OF TRANSPORTATION
CHANGEABLE MESSAGE SIGN
SPECIAL PROVISIONS

ENVIRONMENTAL CHAMBER REQUIREMENTS (Manufacturers Test Site)

An environmental chamber shall be made available for on-site testing of CMS Systems. The chamber shall have the capability of running test temperatures of -73 degrees to +190 degrees centigrade. The minimum of 16 cubic foot interior workspace, cascaded air cooled refrigeration system, 10% to 95% relative humidity, 208 vac single phase operation, programmable controller with RS-232, interior lighting, fog free door window with 6" glove ports, 6" port on both right and left sides, recirculating humidity water supply system and have an abatement package or be able to operate at less than 75 dba.

REJECTION AND ACCEPTANCE

The state may reject any item or an entire shipment which is not in compliance with the specifications or which is in breach of warranty, express or implied, or which is otherwise defective. The State will test and either accept or reject each item or shipment within 30 days of delivery to the Transportation Laboratory. All initial tests shall be at the State's expense. All testing subsequent to rejection of the equipment for failure to comply with specifications requirements will be at the expense of the supplier. Deductions to cover the cost of such testing will be made from any monies due or which may become due the supplier under this purchase order. The vendor shall provide a pre-paid return shipment authorization to the supplier by common carrier for any rejected, failed units or whole lots for each shipment lot and risk unless the supplier notifies the Department of Transportation Laboratory, which the supplier will pick up rejected items within 5 working days of notifications or what is in agreement with the state and vendor.

WARRANTY

The Warranty period of each CMS shall begin upon acceptance of the item by the State and shall extend for twenty four (24) months from when it is received in the Warehouse. This time period shall be extended by the amount of time between the State's notice to the vendor of a defect in the equipment and the vendor's replacement or repair of said equipment and return of said equipment to the State.

Any Field Installations of the equipment prove defective due to failure to conform with the order's specifications or due to otherwise defective workmanship or materials within the specified warranty period, the Vendor agrees, upon demand by the State, to replace or repair said defective equipment without cost to the State, or to reimburse the State, upon demand, for the State's expense incurred in replacing or repairing said equipment.

Supplier Contact: MILAN PATEL
Telephone: 905-265-7800 ext 206 Email: MILAN@LEDSTAR.com Fax: 905-265-7805

Solicitation 56736

DEPARTMENT OF TRANSPORTATION
CHANGEABLE MESSAGE SIGN
SPECIAL PROVISIONS

ON-SITE WARRANTY

The On Site Warranty period shall be 90 days; on-call warranty period for parts and labor shall be applied. This 90-day on site warranty period shall begin upon installation of the CMS and shall not exceed the 24 month warranty period. The supplier stall provide phone and fax numbers designated for the purpose of receiving requests for warranty repair. The supplier shall provide on-site warranty service between the hours of Monday through Friday, from 8:00 a.m. to 5:00 p.m. with the exception of holidays observed by the state.

The supplier shall be available by telephone, email or telefax to request for warranty repairs within eight (8) working hours of the initial notification by the state. If a remedy cannot be accomplished by telephone the supplier shall have twenty-four (24) working hours after initial notification to begin repairs at the site. The supplier will be allowed forty (40) working hours to complete repairs during the on-site warranty period.

Every day a unit is not fully operational, the standard warranty period shall be extended on equal amount of time, on a day for day basis. The same condition applies to the coverage of the on-site warranty, if the unit needing repair is covered under the on-site warranty provisions. The supplier stall maintain a sufficient stock of repair parts and material to meet the requirements of the on-site warranty

Supplier Contact: MILAN PATEL
Telephone: 905-265-7800 EXT. 206 Email: milan@ledstar.com Fax: 905-265-7805

MANUFACTURING QUALITY ASSURANCE/QUALITY CONTORL MANUAL PROCEDURES MUST BE AVAILABLE TO THE STATE

The manufacturer's Quality Assurance and Quality Control procedures applicable for the equipment ordered on this contract must be available when the contract is awarded.

OPERATOR MANUALS

Two (2) draft operator manuals shall be delivered thirty (30) days prior to delivery of the first shipment.

One hundred (100) maintenance manuals shall be provided as follows:

Two (2) in each CMS 334 cabinet (Total = 100 each)

30

Solicitation 56736

DEPARTMENT OF TRANSPORTATION
CHANGEABLE MESSAGE SIGN
SPECIAL PROVISIONS

MAINTENANCE MANUALS

Two (2) draft maintenance manuals shall be delivered thirty (30) days prior to delivery of the first shipment.

One hundred (100) maintenance manuals shall be provided as follows:

Two (2) in each CMS 334 cabinet (Total = 100 each)

The CMS Maintenance Manuals shall provide the following:

1. Preventative Maintenance
2. Trouble Analysis and **Charts**
3. Electrical Connections
4. Timing Diagram
5. Installation Drawings
6. Schematic and Logic Diagrams
7. Assembly Drawings
8. Module and Parts Listings with Part Numbers

PALLET REQUIREMENTS:

All Pallets shall be furnished in accordance with the specifications and grades for warehouse, permanent or returnable pallets of West Coast Woods, issued are the National Wooden Pallet and Container Association. Pallets are to be constructed of Quality grad Douglas fir in accordance with pages B-10 and B-11 of the specifications for CMS Systems referenced above. All measurements referred to in drawings are nominal. Face each 2"x4" member to 4"X4" members with minimum 3-12 d nails per location and each 1"x4" member shall be used to secure cradles and CMS unit to pallet. Pallets are to be constructed with 16-foot and 10-foot 2: x 4" lumber to reduce the number of joints in the pallets. Any proposed changes to the requirements listed herein must be in writing in advance be the Caltrans contact published on the front of the purchase order.

BILLING INQUIRIES

All inquiries, regarding payment or invoice status only, for purchase orders with Caltrans should be directed to Caltrans accounts payable in Sacramento at 1-800-303-1160 or 916-227-8946.

31

Solicitation 56736

DEPARTMENT OF TRANSPORTATION
CHANGEABLE MESSAGE SIGN
SPECIAL PROVISIONS

INVOICE FOR PAYMENTS

Invoices for payment will be submitted only after shipment lots are received at the warehouse and inspected for physical damage and Specification Compliance. Systems not in compliance will not be paid until all discrepancies are corrected.

Vendor to submit invoices for approval to:.

Department of Transportation
Division of Traffic Operations MS#36
Attention: David Song
1120 N Street
Sacramento, Ca 95814

PURCHASE ORDER ALTERATIONS:

The purchase order may be amended, modified or terminated at any time by mutual agreement of the parties, in writing. Purchase order alterations, amending, modifying or terminating the purchase order, including any modification of the compensation payable may be issued only the State Contracts Procurement Officer. All such alterations shall be in writing and shall be issued only upon the written request of the requisitioning agency with the written concurrence of the Vender. Termination, as that term in used in this section, does not include termination for default of the Vendor.

****

I have received, read and agree to Special Provisions for Solicitation 56736, of 8 pages.

Signature of Vendor

Printed Name: VINCE McEWAN

Date: June 9/08

32