DRAWING NUMBER	REV.
D 9-901	A

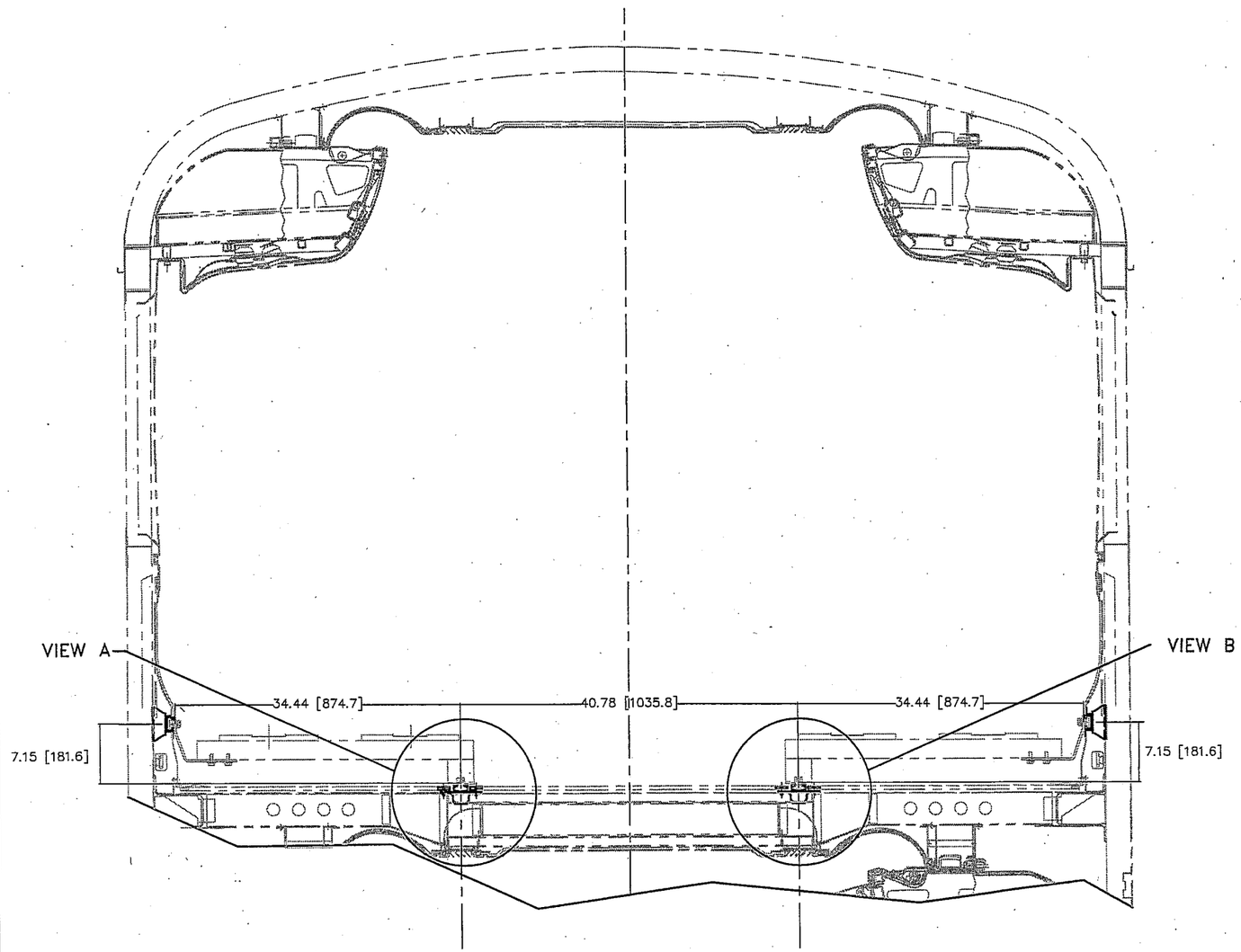

UPPER LEVEL
DOUBLE SEATS
SCALE 1=8

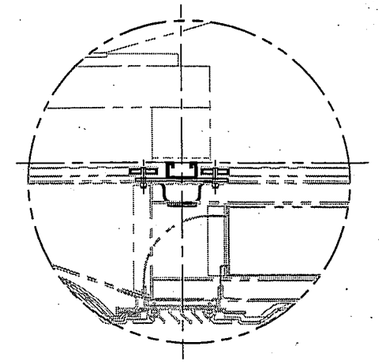

VIEW A
NTS

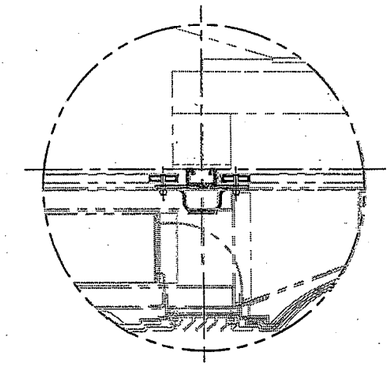

VIEW B
NTS

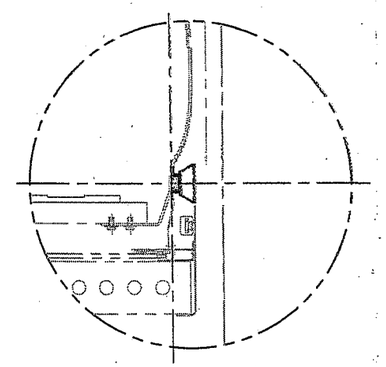

VIEW B
NTS

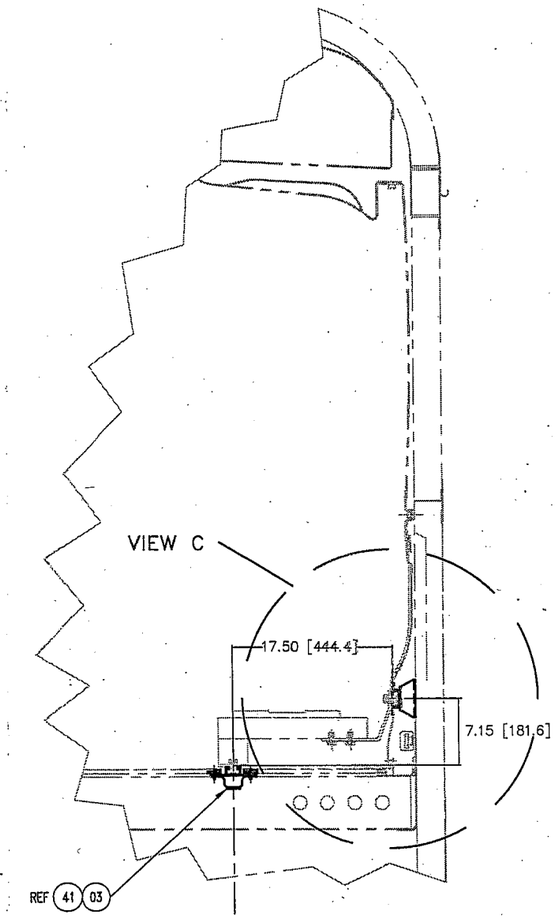

MICROFILM RATIO
24 X

QTY/CAR	USED ON

REFERENCE DRAWINGS

DO NOT SCALE DRAWING

EQUIPMENT ENGINEERING
Caltrans
RAIL EQUIPMENT BRANCH

Dimensions are in inches unless otherwise specified | TOLERANCES | Decimals | Angles
Remove all burrs & break sharp edges.

TITLE
SEAT TRACK REFERENCE DIMENSIONS

Drawn 03/07/98 JAW	Approved	Approved	Approved
Checked	Approved	Approved	For Issue

Scale | DRAWING NUMBER | REV.
SH 1 OF 2 | D 9-901 | A

DRAWING NUMBER	REV.
D 9-901	A

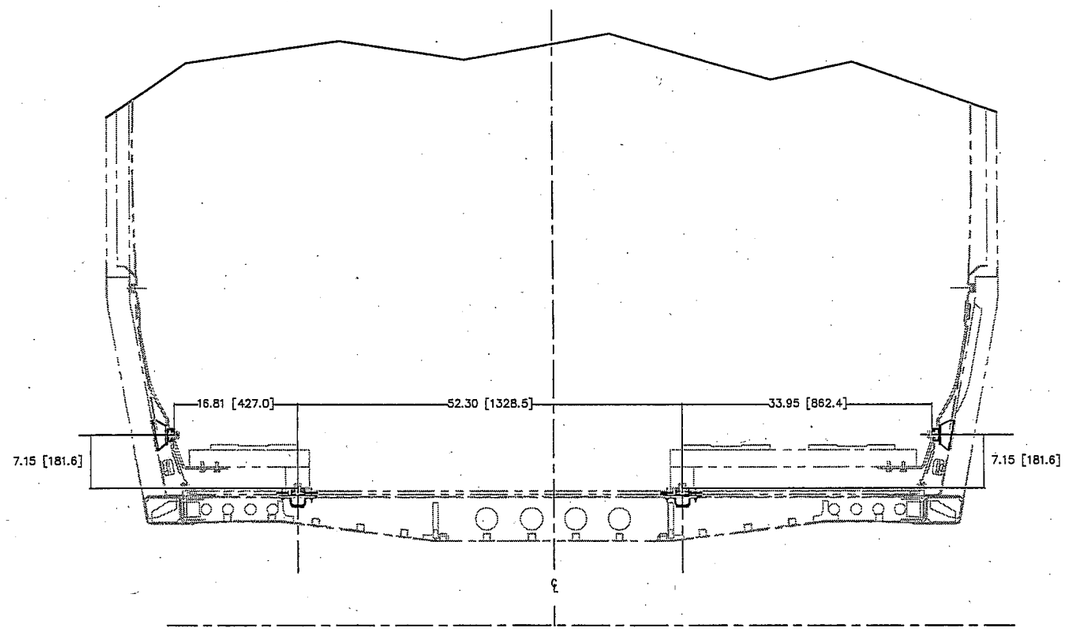

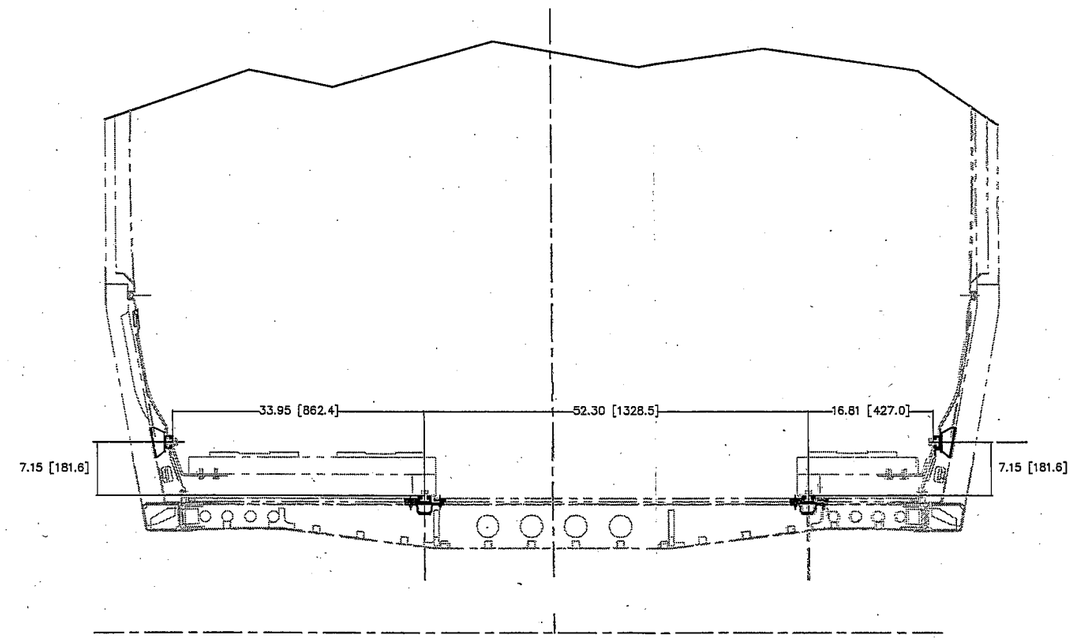

LOWER LEVEL
SINGLE AND DOUBLE SEATS

SCALE: 1=10

MICROFILM RATIO
24 X

QTY/CAR	USED ON

REFERENCE DRAWINGS

DO NOT SCALE DRAWING

EQUIPMENT ENGINEERING

Caltrans
RAIL EQUIPMENT BRANCH

Dimensions are in inches unless otherwise specified

TOLERANCES: Decimals | Angles

Remove all burrs & break sharp edges.

TITLE
SEAT TRACK REFERENCE DIMENSIONS

Drawn 04/01/98 JAW	Approved	Approved	Approved
Checked	Approved	Approved	For Issue

Scale: SH 2 OF 2

DRAWING NUMBER: D 9-901

REV.: A