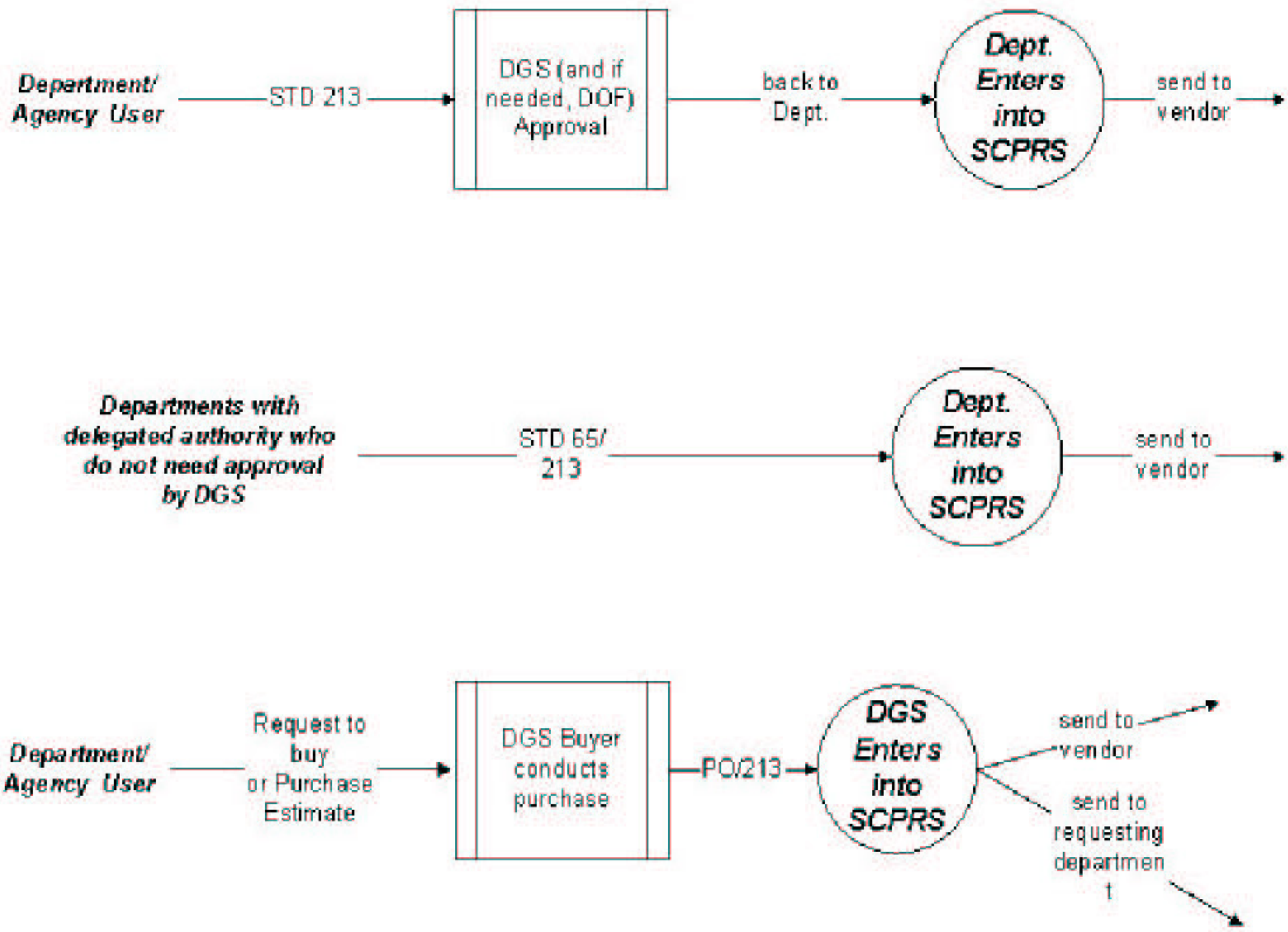The general rule is that the contract/amendment is entered into the SCPRS system directly before the final documents are sent to the Vendor.