CHINO BASIN MUNICIPAL WATER DISTRICT

KIMBALL INTERCEPTOR AND CHINO INTERCEPTOR DIVERSION LINE PROJECT PHASE I

PROJECT NO. EN97004
AUGUST 1998

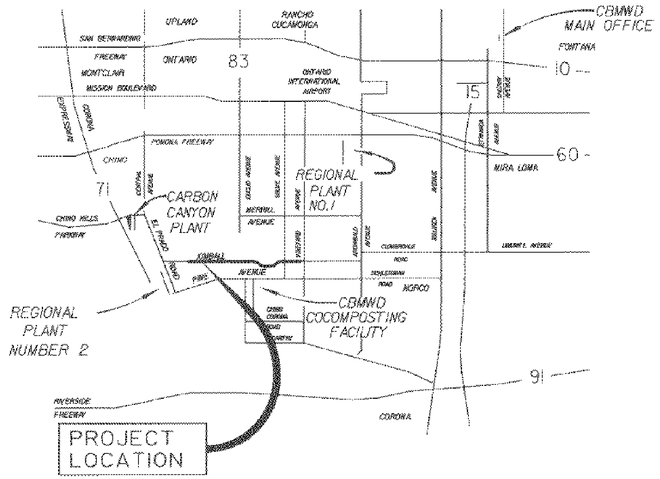

VICINITY MAP
NOT TO SCALE

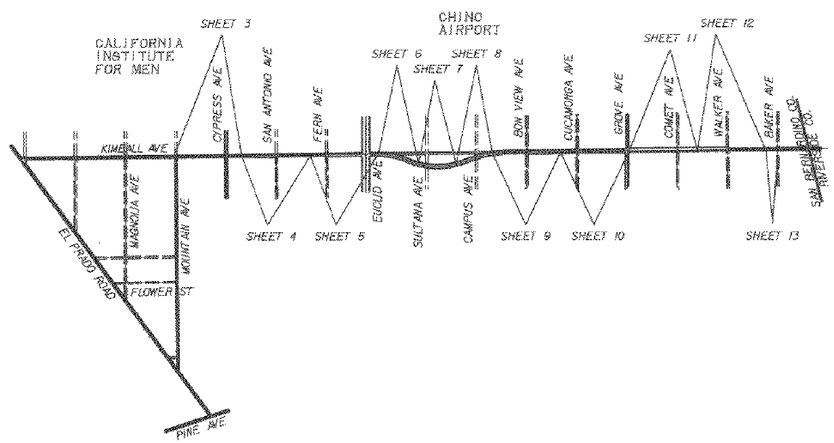

PROJECT LOCATION MAP
NOT TO SCALE

INDEX OF DRAWINGS

SH. NO.	
1	TITLE SHEET
2	GENERAL NOTES
3	PLAN AND PROFILE STA. 50+00.00 TO 68+00.00
4	PLAN AND PROFILE STA. 68+00.00 TO 86+00.00
5	PLAN AND PROFILE STA. 86+00.00 TO 104+00.00
6	PLAN AND PROFILE STA. 104+00.00 TO 115+00.00
7	PLAN AND PROFILE STA. 115+00.00 TO 125+00.00
8	PLAN AND PROFILE STA. 125+00.00 TO 135+00.00
9	PLAN AND PROFILE STA. 135+00.00 TO 153+00.00
10	PLAN AND PROFILE STA. 153+00.00 TO 170+99.90
11	PLAN AND PROFILE STA. 171+00.00 TO 189+00.00
12	PLAN AND PROFILE STA. 189+00.00 TO 207+00.00
13	PLAN AND PROFILE STA. 207+00.00 TO 210+00.00
14	BEDDING, BACKFILL AND PIPE SUPPORT DETAILS
15	SEWER MANHOLE DETAILS
16	SEWER CONNECTION DETAILS 1
17	SEWER CONNECTION DETAILS 2
18	TRAFFIC CONTROL PLAN
19	TRAFFIC CONTROL PLAN - KIMBALL AVENUE AT EUCLID AVENUE
20	TRAFFIC CONTROL PLAN - KIMBALL AVENUE AT GROVE AVENUE

REVIEWED BY:

NEIL CLIFTON — 8/21/98 DATE
MANAGER OF ENGINEERING AND CONSTRUCTION MANAGEMENT OF C.B.M.W.D.
R.C.E. NO. C45576, EXP. 12/98

APPROVED BY:

21 AUG 98
DOUGLAS D. DRURY — DATE
EXECUTIVE MANAGER — OPERATIONS AND ENGINEERING OF C.B.M.W.D.

APPROVED BY:

DR. ROBB D. QUINCEY — 082498 DATE
CHIEF EXECUTIVE OFFICER*GENERAL MANAGER OF C.B.M.W.D.

Underground Service Alert
Call: TOLL FREE
1-800
422-4133
TWO WORKING DAYS BEFORE YOU DIG

AKM CONSULTING ENGINEERS
AKM CONSULTING ENGINEERS
101 PACIFICA, SUITE 150
IRVINE, CA 92618
(949) 753-7333

REGISTERED PROFESSIONAL ENGINEER — JAYME E. MORENO — 46969 — Exp. 3/31/98 — CIVIL — STATE OF CALIFORNIA

Designed C.Y./D.M. 8/98
Drawn AB/SWP/BS/JM 8/98
Checked J.E.M. 8/98 Date

REV. NO.	DATE	BY	APRVD	DESCRIPTION

REVIEWED BY: Project Manager for CBMWD — Date 8-20-98

SCALE
AS SHOWN
Bar Scale shown below is one inch on original drawing. If NOT one inch on this sheet, adjust scales accordingly.
0" — 1"

CHINO BASIN MUNICIPAL WATER DISTRICT
LOCATION: 9400 Cherry Avenue, Building A, Fontana, California 92335, Telephone (909) 357-0241
MAILING ADDRESS: Post Office Box 697, Rancho Cucamonga, California 91730

AKM CONSULTING ENGINEERS
KIMBALL INTERCEPTOR
CONTRACT EN97004
TITLE SHEET

SHEET NO. 1 OF 20
JOB NO. 690231
DRAWING NO. D4606-1

GENNOTES.DGN 7/10/97

GENERAL NOTES

1. THE BASIS OF COORDINATES IS BASED ON NORTH AMERICA DATUM OF 1983, BASED LOCALLY ON MONUMENTED POINTS "14013" AND "19049" AS SHOWN ON RECORD OF SURVEY FILED IN BOOK 98, PAGES 49-52 IN THE OFFICE OF THE COUNTY SURVEYOR OF SAN BERNARDINO COUNTY.
2. ALL WORK SHALL BE DONE IN ACCORDANCE WITH THE STANDARD SPECIFICATIONS FOR PUBLIC WORKS CONSTRUCTION (1997 EDITION), CITY OF CHINO STANDARD SPECIFICATIONS AND STANDARD DRAWINGS AND CHINO BASIN MUNICIPAL WATER DISTRICT STANDARD DETAILS ON THIS PLAN SET, SHEETS 14-15 AS APPROPRIATE.
3. UTILITIES ARE SHOWN ACCORDING TO THE EXISTING RECORDS IN ALL AGENCIES FOR THIS AREA. HOWEVER, IT IS THE RESPONSIBILITY OF THE CONTRACTOR TO DETERMINE THE EXACT LOCATION OF ALL UTILITIES AND THEIR SERVICE CONNECTIONS. THE CONTRACTOR SHALL BE LIABLE FOR ANY ADDITIONAL COST REQUIRED IN THE EVENT THAT NOT ALL EXISTING UTILITIES WERE LOCATED CORRECTLY.
4. ANY CONTRACTOR PERFORMING WORK ON THIS PROJECT SHALL FAMILIARIZE HIMSELF WITH THE SITE AND SHALL BE SOLELY RESPONSIBLE FOR ANY DAMAGE TO EXISTING FACILITIES RESULTING DIRECTLY OR INDIRECTLY FROM HIS OPERATIONS WHETHER OR NOT SHOWN ON PLANS.
5. THE CONTRACTOR SHALL CALL UNDERGROUND SERVICE ALERT (U.S.A.) 1-800-422-4133 AT LEAST 48 HOURS PRIOR TO STARTING WORK.
6. SURPLUS AND MATERIAL REMOVED WHICH IS NOT SUITABLE FOR USE IN THIS PROJECT SHALL BECOME THE PROPERTY OF THE CONTRACTOR AND SHALL BE DISPOSED OF AWAY FROM THE JOBSITE IN A MANNER AND AT A LOCATION ACCEPTABLE TO ALL COGNIZANT AGENCIES.
7. THE CONTRACTOR SHALL CONFINE ALL OF HIS ACTIVITIES TO THE AREA WITHIN THE EXISTING STREET RIGHT-OF-WAY AND CBMWD PROPERTY OR EASEMENTS SHOWN ON THESE PLANS UNLESS HE OBTAINS WRITTEN CONSENT FROM THE AFFECTED PROPERTY OWNER.
8. EXISTING UTILITIES SHALL BE MAINTAINED IN PLACE BY THE CONTRACTOR PER "PIPE SUPPORT DETAILS" ON SHEET 14, UNLESS OTHERWISE NOTED ON PLANS. FOR PIPES LARGER THAN TABLE CASE 3, THE UTILITY COMPANY SHALL PROVIDE DESIGN AND THIS SHALL BE APPROVED BY THE DISTRICT.
9. THE CONTRACTOR SHALL REMOVE, DISPOSE AND REPLACE EXISTING PAVEMENT, CURB, GUTTER, AND SIDEWALKS WHERE NEW IMPROVEMENTS ARE REQUIRED ON THE PLANS.
10. CONTRACTOR MUST MAINTAIN ALL TRAFFIC SIGNS IN UPRIGHT POSITIONS AND SET FRAME IN PROPER POSITION AT COMPLETION OF WORK.
11. PRIOR TO START OF CONSTRUCTION, THE CONTRACTOR SHALL VERIFY LOCATION AND ELEVATION OF SEWER MAINS AND NOTIFY AND OBTAIN THE APPROVAL OF CBMWD FOR ANY VARIATION FROM THE DESIGN.
12. THE CONTRACTOR SHALL RENEW OR REPLACE ANY EXISTING TRAFFIC STRIPING AND/OR PAVEMENT MARKINGS WHICH DURING HIS OPERATION HAVE BEEN EITHER REMOVED OR THE EFFECTIVENESS HAS BEEN REDUCED. RENEWAL OF PAVEMENT STRIPING SHALL BE IN CONFORMANCE WITH SECTION 310-5.0 OF STANDARD SPECIFICATIONS FOR PUBLIC WORKS CONSTRUCTION.
13. ALL TRENCHING AND/OR SHORING SHALL MEET THE REQUIREMENTS OF CAL OSHA.
14. THE CONTRACTOR SHALL OBTAIN TRAFFIC CONTROL PERMITS FROM THE CITY OF CHINO AND THE COUNTY OF SAN BERNARDINO 48 HOURS PRIOR TO TIME OF CONSTRUCTION WITHIN THE PUBLIC RIGHT-OF-WAY.
15. CONSTRUCTION SHALL NOT BEGIN ON FACILITIES TO BE OWNED BY CBMWD UNTIL AFTER THE ISSUANCE OF A PERMIT BY CBMWD TO ALLOW THE CONSTRUCTION AND ALSO AFTER A PRE-CONSTRUCTION MEETING TO BE HELD AT LEAST ONE WEEK PRIOR TO CONSTRUCTION. IN ADDITION CBMWD SHALL BE NOTIFIED A MINIMUM OF 48 HOURS PRIOR TO ANY CONSTRUCTION IN THE VICINITY OF THE TRUNK SEWER OR ANY FACILITIES OWNED AND OPERATED BY CBMWD.
16. THE CONTRACTOR SHALL SUBMIT COPIES OF THE DEPARTMENT OF INDUSTRIAL SAFETY PERMIT TO CBMWD AND TO THE CITY OF CHINO PRIOR TO BEGINNING CONSTRUCTION.
17. THE CONTRACTOR SHALL FOLLOW TRAFFIC CONTROL PLANS DURING CONSTRUCTION. AT THE END OF EACH DAY HOMEOWNERS SHOULD NOT BE OBSTRUCTED IN GAINING ACCESS TO THEIR RESIDENCE. CONTRACTOR SHALL SCHEDULE FOR ONSITE COORDINATION WITH BUILDING CONTRACTORS FOR ACCESS LIMITS OR CLOSURES ANTICIPATED TO EFFECT PROGRESS OF WORK.
18. THE CONTRACTOR SHALL GIVE AT LEAST 10 DAYS NOTICE TO THE OWNERS OR OCCUPANTS OF PROPERTY ADJACENT AND PROVIDE TEMPORARY DRIVEWAY ACCESS WITH COMPACTED RAMPS, AFTER REMOVALS, FOR OWNER USE OR OTHERWISE AGREED TO IN WRITTEN DOCUMENTATION.
19. UTILITIES NOT SHOWN ON PLANS BUT ARE IDENTIFIED IN THE FIELD BY UNDERGROUND SERVICE ALERT (U.S.A.) SHALL BE CONSIDERED "IDENTIFIED UTILITIES" DURING CONSTRUCTION.
20. STATIONS SHOWN ARE ALONG CENTERLINE OF PIPELINE.
21. STATIONS AND INVERT ELEVATION OF PIPE INLETS SHOWN ON THE PROFILES ARE AT THE INSIDE FACE OF THE CONDUIT, UNLESS OTHERWISE SHOWN.
22. HOUSE CONNECTIONS OBSTRUCTING CONSTRUCTION OF SEWER MAIN SHALL BE REMOVED AND REMODELED CLEAR FROM OBSTRUCTING SEWER MAIN AND OTHER UTILITIES PER APWA STD. DWG. 223-1.
23. TELEPHONE AND GAS LINES TO BE RELOCATED SHALL BE CLEAR FROM OBSTRUCTING SEWER MAIN AND OTHER UTILITIES.
24. TELEPHONE POLES TO BE RELOCATED SHALL BE CLEAR FROM OBSTRUCTING SEWER MAIN AND OTHER UTILITIES. VERIFY AND COORDINATE WITH GTE.
25. THE CONTRACTOR SHALL VERIFY LOCATIONS OF IRRIGATION PIPES AND REMOVE AND REPLACE IF IRRIGATION PIPES OBSTRUCT CONSTRUCTION OF SEWER MAIN.
26. GEOTECHNICAL INVESTIGATION REPORT IS AVAILABLE FOR REVIEW IN DISTRICT'S OFFICE ON REQUEST.
27. PIPE BEDDING SHALL BE CLASS B AND SHALL CONFORM TO "BEDDING DETAILS" HEREON SHEET 14.
28. WHERE NECESSARY, CONTRACTOR WILL REMOVE AND REPLACE EXISTING FENCE WITH FENCING "EQUAL TO OR GREATER THAN" FENCE REMOVED.
29. SANITARY SEWER PLANS IN EXISTING FACILITIES SHALL NOT BE INTERRUPTED. WHEN NECESSARY, SEWAGE SHALL BE CONVEYED IN CLOSED CONDUITS AND DISPOSED IN A SANITARY SEWER SYSTEM

CONSTRUCTION NOTES

(10) CONSTRUCT 24-INCH VCP
(11) CONSTRUCT 60-INCH RCP I700-D WITH 270°T-LOCK LINING
(12) CONSTRUCT 54-INCH RCP I600-D WITH 270°T-LOCK LINING
(13) CONSTRUCT 7'Ø SEWER MANHOLE PER DETAIL (2/16)
(14) CONSTRUCT 6'Ø SEWER MANHOLE PER DETAIL ON SHEET 15
(15) JACK-IN-PLACE 60-INCH RCP WITH 270°T-LOCK LINING
(16) CONSTRUCT 9'Ø SEWER MANHOLE PER DETAIL (3/17)
(17) CONSTRUCT 5'Ø SEWER MANHOLE PER DETAIL (1/16)
(18) CONSTRUCT 9'Ø SEWER MANHOLE PER DETAIL (1/17)
(19) INSTALL 54-INCH RCP WITH 360°T-LOCK LINING
ALTERNATE METHOD I - JACK AND BORE 84" STEEL CASING PER DETAIL HEREON (SHT. 5)
ALTERNATE METHOD II - OPEN CUT INSTALLATION (SHT. 5A)
(20) CONSTRUCT 6'Ø SEWER MANHOLE PER DETAIL (2/17)
(21) CONSTRUCT 7'Ø SEWER MANHOLE PER DETAIL (4/17)
(22) CONSTRUCT 5'Ø SEWER MANHOLE PER DETAIL (3/16)
(23) PROTECT IN PLACE
(24) CONSTRUCT 5'Ø TERMINAL SEWER MANHOLE PER DETAIL ON SHEET 15
(25) CONTRACTOR SHALL CONNECT PROPOSED SEWER TO EXISTING SEWER LINE
(26) CONSTRUCT 5'Ø SEWER MANHOLE PER CITY OF CHINO STANDARDS

DISPOSITION NOTES

[1] GTE SHALL RELOCATE TELEPHONE LINE AND THE CONTRACTOR SHALL REIMBURSE GTE
[2] THE GAS COMPANY SHALL RELOCATE GAS LINE AND THE CONTRACTOR SHALL REIMBURSE THE GAS COMPANY
[3] GTE SHALL RELOCATE TELEPHONE POLE AND THE CONTRACTOR SHALL REIMBURSE GTE
[4] ABANDON EXISTING 15" SEWER BETWEEN STA. 102+50 AND STA. 106+56

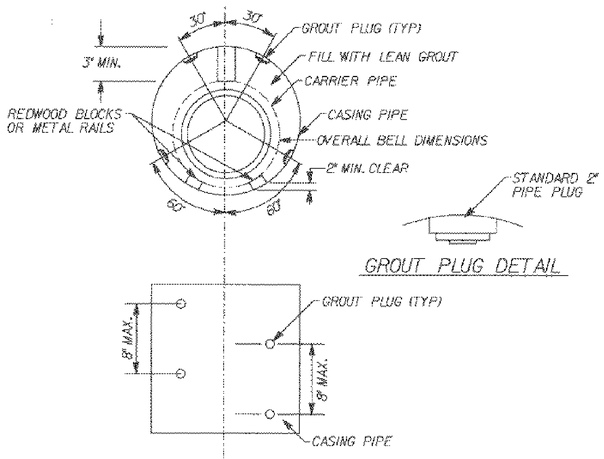

STEEL CASING DETAIL (1/5)
NOT TO SCALE

UTILITIES

AGENCY	PHONE NUMBER
CITY OF CHINO	909-627-7577
CALTRANS	909-383-6348
SAN BERNARDINO COUNTY: FLOOD CONTROL	909-387-2642
ROADWAY	909-387-2888
DEPARTMENT OF AIRPORTS	909-387-2877
SOUTHERN CALIF. GAS	909-335-7744
SOUTHERN CALIF. EDISON	909-930-8434
GTE	909-469-6350
SAWPA	909-785-5411

LEGEND

	PROPOSED	EXISTING
PROPERTY LINE		
SANITARY SEWER		S
WATER MAIN		W
MANHOLE		S
STORM DRAIN		SD
GAS MAIN		G
TRAFFIC SIGNAL CONDUIT		TSC
CURB & GUTTER		
ELEVATIONS	574.0	(649.8)
POWER/TELEPHONE POLE		
EXISTING EDGE OF PAVEMENT		
EXISTING FENCE	-x-x-x-	

ABBREVIATIONS

BC	BEGINING OF CURVE
CMP	CORRUGATED METAL PIPE
EC	END OF CURVE
EL.	ELEVATION
G	GAS LINE
GB	GRADE BRAKE
L.F.	LINEAR FEET
MH	MANHOLE
PCC	POINT OF COMPOUND CURVATURE
RCP	REINFORCED CONCRETE PIPE
R/W	RIGHT-OF-WAY
S	SEWER LINE
SD	STORM DRAIN
STA.	STATION
SMH	SEWER MANHOLE
TEL	TEL
TSB	TRAFFIC SIGNAL BOX
TSC	TRAFFIC SIGNAL CONDUIT
W	WATER LINE

CHINO BASIN MUNICIPAL WATER DISTRICT ON THESE DRAWINGS REFERS TO INLAND EMPIRE UTILITIES AGENCY

AKM CONSULTING ENGINEERS
101 PACIFICA, SUITE 150
IRVINE, CA 92618
(949) 753-7333

REGISTERED PROFESSIONAL ENGINEER — JAMES E. MONTGOMERY — No. 42055 — 3/31/98 — CIVIL — STATE OF CALIFORNIA

Designed C.Y./D.M. 8/98
Drawn AB/SWP/BS/JM 8/98
Checked J.E.M. 8/98
Date

REV. NO.	DATE	BY	APRVD	DESCRIPTION

REVIEWED BY:
M. T. Montgomery
Project Manager for CBMWD
Date 8-20-98

SCALE
AS SHOWN
Bar Scale shown below is one inch on original drawing. If NOT one inch on this sheet, adjust scales accordingly.
0" _____ 1"

CHINO BASIN MUNICIPAL WATER DISTRICT
LOCATION: 9400 Cherry Avenue, Building A, Fontana, California 92335, Telephone (909) 357-0241
MAILING ADDRESS: Post Office Box 697, Rancho Cucamonga, California 91730

AKM CONSULTING ENGINEERS
KIMBALL INTERCEPTOR
CONTRACT EN97004

GENERAL NOTES

SHEET NO. 2 OF 20
JOB NO. 690231
DRAWING NO. D4606-2

PNP 54-7.DGN 7/10/97

PROFILE SCALE:
HORIZ. 1"=40'
VERT. 1"=8'

HYDRAULIC DATA

FROM STA TO STA	DIAMETER	DEPTH	VELOCITY	d/D	SLOPE
50+87.68 TO 68+00	(inch)	(ft)	(ft/sec)		
Qmin.= 15.12	60"	1.82	3.61	0.36	0.001
Qmax.= 60.28		FULL	FULL	FULL	
Qrec.= 47.73		3.70	4.74	0.74	

* Q's ARE IN MILLION GALLONS PER DAY

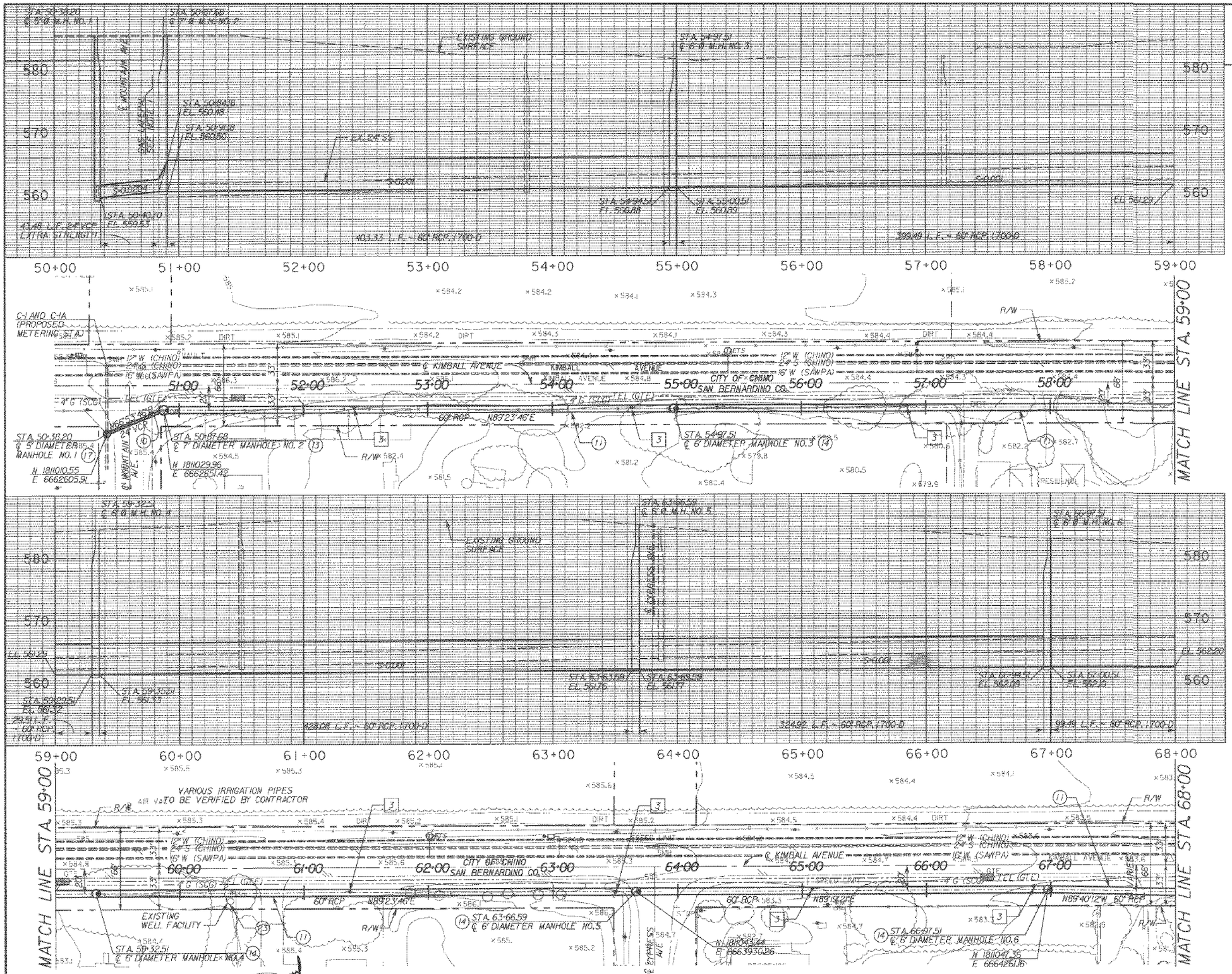

CONSTRUCTION NOTES

(10) CONSTRUCT 24-INCH VCP
(11) CONSTRUCT 60-INCH RCP 1700-D WITH 270°T-LOCK LINING
(13) CONSTRUCT 7'Ø SEWER MANHOLE PER DETAIL (2/16)
(14) CONSTRUCT 6'Ø SEWER MANHOLE PER DETAIL ON SHEET 15
(17) CONSTRUCT 5'Ø SEWER MANHOLE PER DETAIL (1/16)
(23) PROTECT IN PLACE

DISPOSITION NOTES

[3] GTE SHALL RELOCATE TELEPHONE POLE AND THE CONTRACTOR SHALL REIMBURSE GTE

N

40 20 0 40 80
SCALE IN FEET
(1inch = 40ft.

AKM CONSULTING ENGINEERS
101 PACIFICA, SUITE 150
IRVINE, CA 92618
(949) 753-7333

REGISTERED PROFESSIONAL ENGINEER — JAMES E. MCMAHON — No. 52956 — 3/3/99 — CIVIL — STATE OF CALIFORNIA

Designed C.Y./D.M. 8/98
Drawn AB/SWP/BS/JM 8/98
Checked J.E.M. 8/98
Date

REV. NO.	DATE	BY	APRVD	DESCRIPTION

REVIEWED BY:
M. T. Manson
Project Manager for CBMWD
Date 3-20-98

SCALE
AS SHOWN
Bar Scale shown below is one inch on original drawing. If NOT one inch on this sheet, adjust scales accordingly.
0" 1"

CHINO BASIN MUNICIPAL WATER DISTRICT
LOCATION: 9400 Cherry Avenue, Building A, Fontana, California 92335, Telephone (909) 357-0241
MAILING ADDRESS: Post Office Box 697, Rancho Cucamonga, California 91730

AKM CONSULTING ENGINEERS
KIMBALL INTERCEPTOR
CONTRACT EN97004
GRAVITY SEWER PLAN AND PROFILE
STA. 50+00.00 TO STA. 68+00.00

SHEET NO. 3 OF 20
JOB NO. 590231
DRAWING NO. D4606-3

PNF SHT4.DGN 7/10/97

PROFILE SCALE:
HORIZ. 1"=40'
VERT. 1"=8'

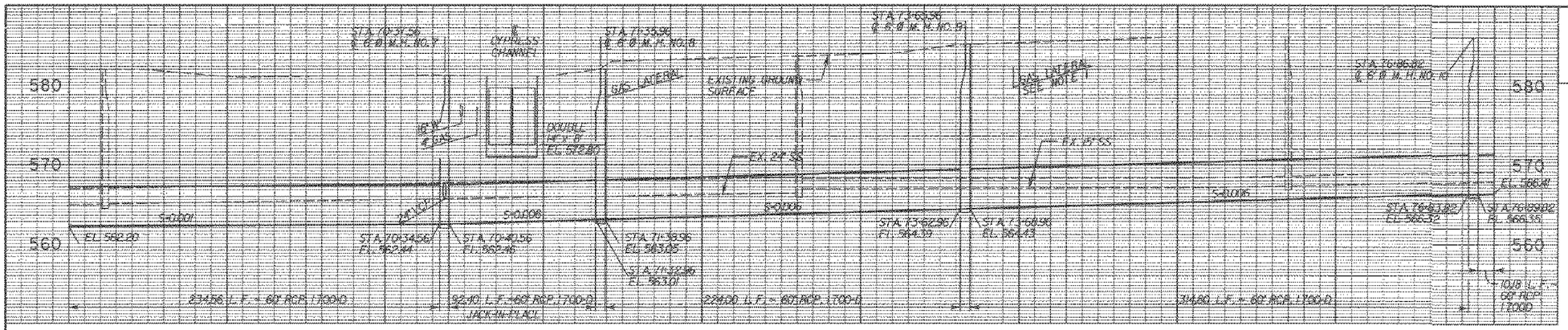

HYDRAULIC DATA

FROM STA. TO STA.	DIAMETER (inch)	DEPTH (ft)	VELOCITY (ft/sec)	d/D	SLOPE
68+00 TO 70+37.56					
Qmin.= 15.12	60"	1.82	3.61	0.36	0.001
Qmax.= 60.28		FULL	FULL	FULL	
Qrec.= 47.73		3.20	4.74	0.74	
70+37.56 TO 86+00					
Qmin.= 15.12	60"	1.15	6.86	0.23	0.006
Qmax.= 60.28		2.39	10.07	0.48	
Qrec.= 47.73		2.09	9.48	0.42	

* Q's ARE IN MILLION GALLONS PER DAY

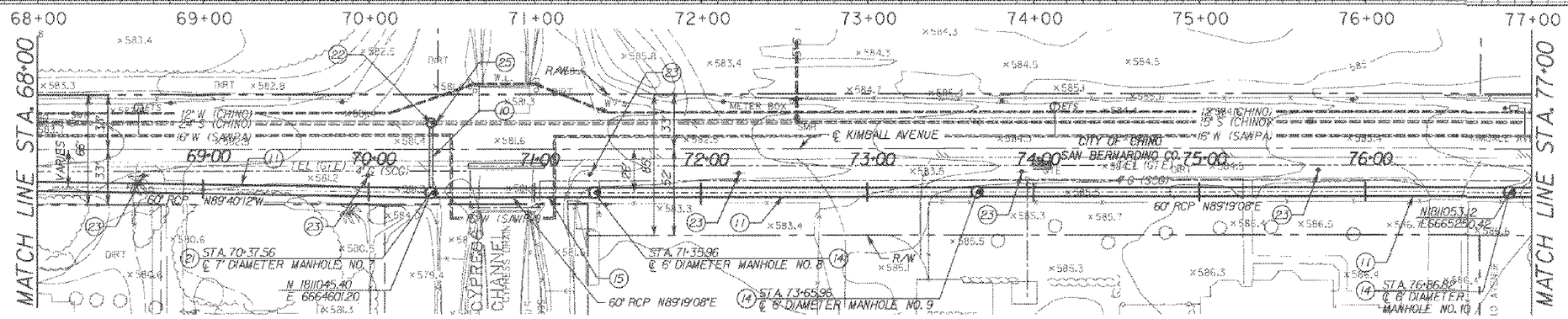

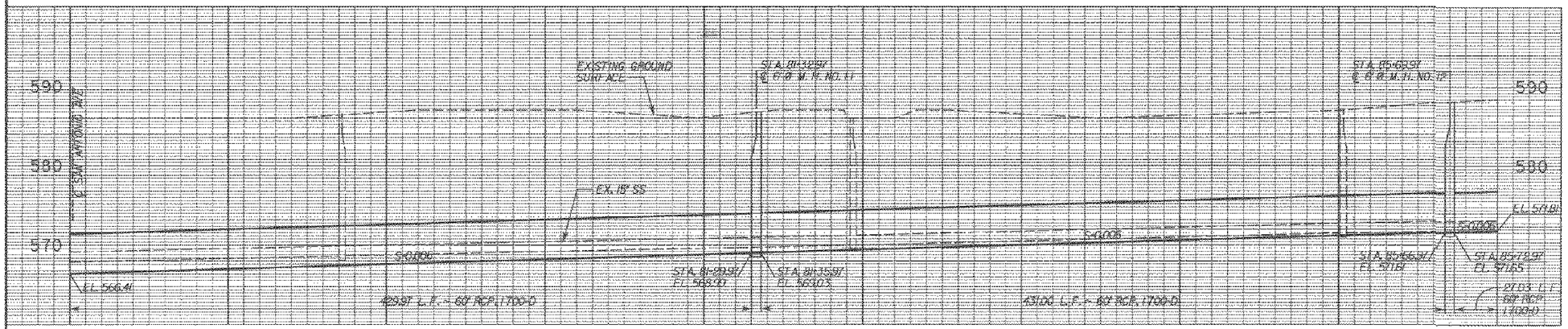

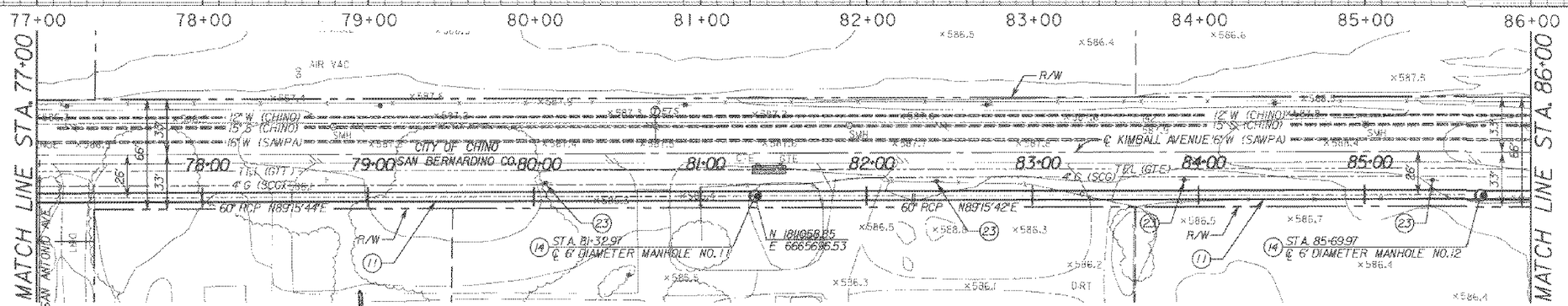

CONSTRUCTION NOTES

(10) CONSTRUCT 24-INCH VCP
(11) CONSTRUCT 60-INCH RCP 1700-D WITH 270°T-LOCK LINING
(14) CONSTRUCT 6'Ø SEWER MANHOLE PER DETAIL ON SHEET 15
(15) JACK-IN-PLACE 60-INCH RCP WITH 270°T-LOCK LINING
(21) CONSTRUCT 7'Ø SEWER MANHOLE PER DETAIL (4/17)
(22) CONSTRUCT 5'Ø SEWER MANHOLE PER DETAIL (3/16)
(23) PROTECT IN PLACE
(25) CONTRACTOR SHALL CONNECT PROPOSED SEWER TO THE EXISTING SEWER LINE

N

40 20 0 40 80
SCALE IN FEET
(1inch = 40ft.)

AKM CONSULTING ENGINEERS
101 PACIFICA, SUITE 150
IRVINE, CA 92618
(949) 753-7333

REGISTERED PROFESSIONAL ENGINEER — JAMES E. MICHAEL — No. 42955 — Exp. 3/31/99 — CIVIL — STATE OF CALIFORNIA

Designed C.Y./D.M. 8/98
Drawn AB/SWP/BS/JM 8/98
Checked J.E.M. 8/98
Date

REV. NO.	DATE	BY	APRVD	DESCRIPTION

REVIEWED BY:
M. T. Mangeri
Project Manager for CBMWD
Date 8-30-98

SCALE
AS SHOWN
Bar Scale shown below is one inch on original drawing. If NOT one inch on this sheet, adjust scales accordingly.
0" 1"

CHINO BASIN MUNICIPAL WATER DISTRICT
LOCATION: 9400 Cherry Avenue, Building A, Fontana, California 92335, Telephone (909) 357-5241
MAILING ADDRESS: Post Office Box 697, Rancho Cucamonga, California 91730

AKM CONSULTING ENGINEERS
KIMBALL INTERCEPTOR
CONTRACT EN97004

GRAVITY SEWER PLAN AND PROFILE STA. 68+00.00 TO STA. 86+00.00

SHEET NO. 4 OF 20
JOB NO. 690231
DRAWING NO. 0466-4

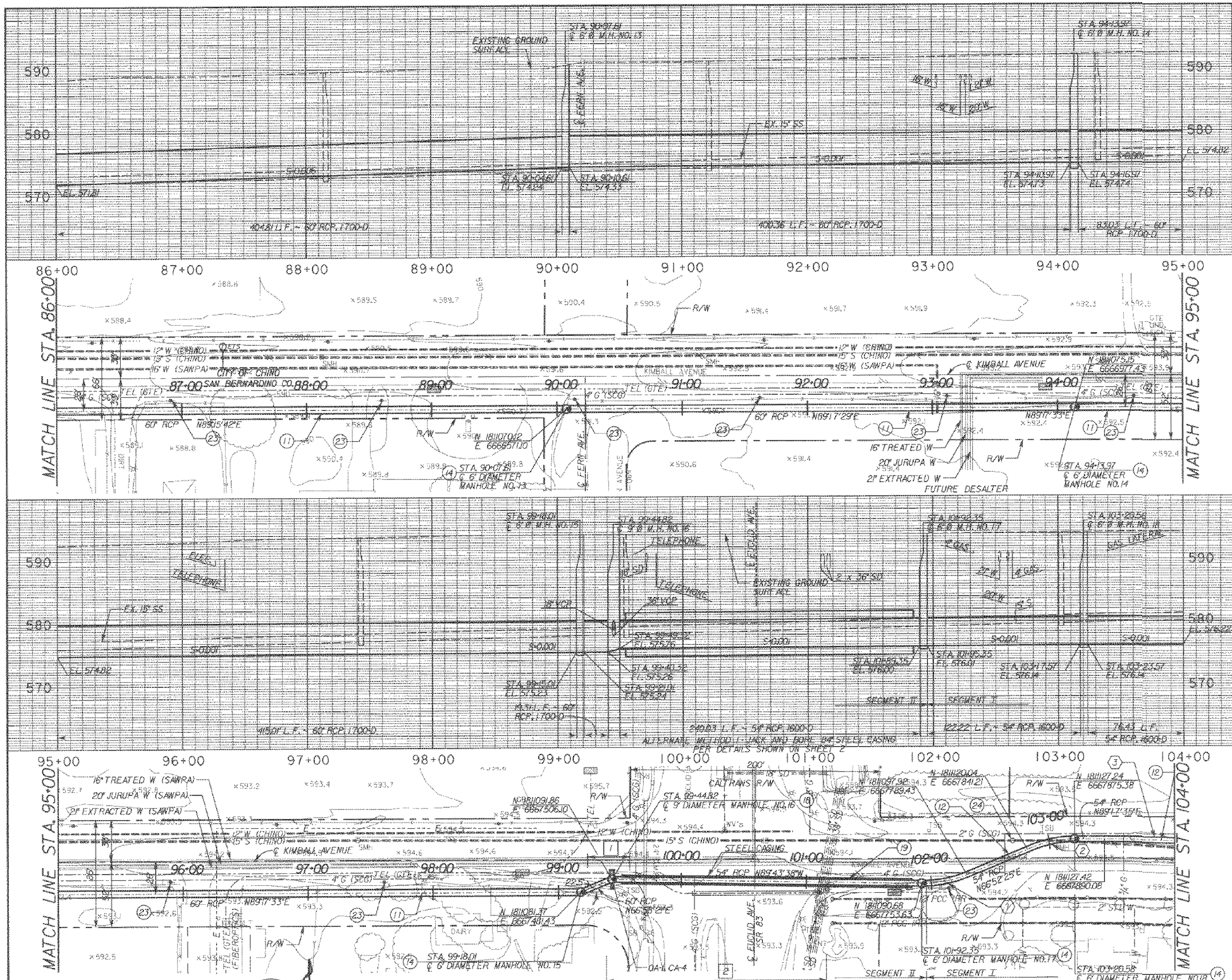

PROFILE SCALE:

HORIZ. 1" = 40'
VERT. 1" = 8'

HYDRAULIC DATA

FROM STA. TO STA.	DIAMETER (inch)	DEPTH (ft)	VELOCITY (ft/sec)	d/D	SLOPE
86+00 TO 90+07.61					
Qmin. = 15.12	60"	1.15	6.86	0.23	0.006
Qmax. = 60.28		2.39	10.07	0.48	
Qrec. = 47.73		2.09	9.48	0.42	
90+07.61 TO 99+44.82					
Qmin. = 15.12	60"	1.82	3.61	0.36	0.001
Qmax. = 60.28		FULL	FULL	FULL	
Qrec. = 47.73		3.70	4.74	0.74	
99+44.82 TO 104+00					
Qmin. = 11.82	54"	1.67	3.40	0.37	0.001
Qmax. = 53.68		FULL	FULL	FULL	
Qrec. = 36.89		3.39	4.44	0.75	

* Q's ARE IN MILLION GALLONS PER DAY

CONSTRUCTION NOTES

(11) CONSTRUCT 60-INCH RCP 1700-D WITH 270°T-LOCK LINING

(12) CONSTRUCT 54-INCH RCP 1600-D WITH 270°T-LOCK LINING

(14) CONSTRUCT 6'Ø SEWER MANHOLE PER DETAIL ON SHEET 15

(18) CONSTRUCT 9'Ø SEWER MANHOLE PER DETAIL (1/17)

(19) INSTALL 54-INCH RCP WITH 360°T-LOCK LINING. ALTERNATE METHOD 1 - JACK AND BORE 84" STEEL CASING PER DETAILS SHOWN ON SHEET 2

(23) PROTECT IN PLACE

(24) CONSTRUCT 5'Ø TERMINAL SEWER MANHOLE PER DETAIL ON SHEET 15

DISPOSITION NOTES

[1] GTE SHALL RELOCATE TELPHONE LINE AND THE CONTRACTOR SHALL REIMBURSE GTE

[2] THE GAS COMPANY SHALL RELOCATE GAS LINE AND THE CONTRACTOR SHALL REIMBURSE THE GAS COMPANY

PIPELINE ℄ CURVE DATA

NO.	Δ	R	L	T	BC	EC
(1)	23°24'56"	90.00	36.78	18.65	101+92.35	102+29.13
(2)	22°22'21"	90.00	35.14	17.84	102+85.44	103+20.58
(3)	1°50'27"	2014.97	64.72	32.37	103+35.28	104+00.00

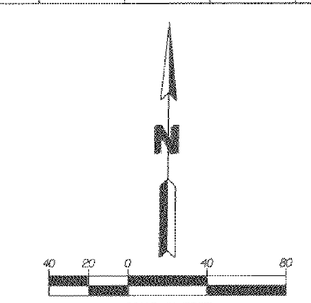

AKM CONSULTING ENGINEERS
101 PACIFICA, SUITE 150
IRVINE, CA 92618
(949) 753-7333

Designed C.Y./D.M. 8/98
Drawn AB/SWP/BS/JM 8/98
Checked J.E.M. 8/98
Date

REV. NO.	DATE	BY	APRVD	DESCRIPTION

REVIEWED BY:
M. T. Morrow Date 8-20-98
Project Manager for CBMWD

SCALE
AS SHOWN
For Scale shown below is one inch on original drawing. If NOT one inch on this sheet, adjust scales accordingly.
0" — 1"

CHINO BASIN
MUNICIPAL WATER DISTRICT
LOCATION: 9400 Cherry Avenue, Building A, Fontana, California 92335, Telephone (909) 357-0241
MAILING ADDRESS: Post Office Box 697, Rancho Cucamonga, California 91730

AKM CONSULTING ENGINEERS
KIMBALL INTERCEPTOR
CONTRACT EN97004
GRAVITY SEWER PLAN AND PROFILE
STA. 86+00.00 TO STA. 104+00.00

SHEET NO. 5 OF 20
JOB NO. 690231
DRAWING NO. D4606-5

PROFILE SCALE:

HORIZ. 1"=40'
VERT. 1"=8'

HYDRAULIC DATA

FROM STA. TO STA.	DIAMETER (inch)	DEPTH (ft)	VELOCITY (ft/sec)	d/D	SLOPE
86+00 TO 90+07.61					
Qmin.= 15.12	60"	1.15	6.86	0.23	0.006
Qmax.= 60.28		2.39	10.97	0.48	
Qrec.= 47.73		2.09	9.48	0.42	
90+07.61 TO 99+44.82					
Qmin.= 15.12	60"	1.82	3.61	0.36	0.001
Qmax.= 60.28		FULL	FULL	FULL	
Qrec.= 47.73		3.70	4.74	0.74	
99+44.82 TO 104+00					
Qmin.= 11.82	54"	1.67	3.40	0.37	0.001
Qmax.= 53.68		FULL	FULL	FULL	
Qrec.= 36.89		3.39	4.44	0.75	

* Q's ARE IN MILLION GALLONS PER DAY

CONSTRUCTION NOTES

(11) CONSTRUCT 60-INCH RCP 1700-D WITH 270° T-LOCK LINING

(12) CONSTRUCT 54-INCH RCP 1600-D WITH 270° T-LOCK LINING

(14) CONSTRUCT 6'Ø SEWER MANHOLE PER DETAIL ON SHEET 15

(18) CONSTRUCT 9'Ø SEWER MANHOLE PER DETAIL (17)

(19) INSTALL 54-INCH RCP WITH 360° T-LOCK LINING. ALTERNATE METHOD II - OPEN TRENCH INSTALLATION

(23) PROTECT IN PLACE

(24) CONSTRUCT 5'Ø TERMINAL SEWER MANHOLE PER DETAIL ON SHEET 15

DISPOSITION NOTES

[1] GTE SHALL RELOCATE TELPHONE LINE AND THE CONTRACTOR SHALL REIMBURSE GTE

[2] THE GAS COMPANY SHALL RELOCATE GAS LINE AND THE CONTRACTOR SHALL REIMBURSE THE GAS COMPANY

PIPELINE ℄ CURVE DATA

NO.	△	R	L	T	BC	EC
(1)	23°24'56"	90.00	36.78	18.65	101+92.35	102+29.13
(2)	22°22'21"	90.00	35.14	17.84	102+85.44	103+20.58
(3)	1°50'27"	2014.97	64.72	32.37	103+35.28	104+00.00

SCALE IN FEET
1 inch = 40 ft.

AKM CONSULTING ENGINEERS
101 PACIFICA, SUITE 150
IRVINE, CA 92618
(949) 753-7333

REGISTERED PROFESSIONAL ENGINEER — JAMES E. MICHAELSEN — No. 15561 — 3/3/99 — CIVIL — STATE OF CALIFORNIA

Designed C.Y./D.M. 6/98
Drawn AB/SWP/BS/JM 6/98
Checked J.E.M. 6/98
Date

REV. NO.	DATE	BY	APRVD	DESCRIPTION

REVIEWED BY:
M.T. Mansour
Project Manager for CBMWD
Date 8-20-98

SCALE
AS SHOWN
Bar Scale shown below is one inch on original drawing. If NOT one inch on this sheet, adjust scales accordingly.
0" 1"

CHINO BASIN MUNICIPAL WATER DISTRICT
LOCATION: 9400 Cherry Avenue, Building A, Fontana, California 92335, Telephone (909) 357-0241
MAILING ADDRESS: Post Office Box 697, Rancho Cucamonga, California 91730

AKM CONSULTING ENGINEERS
KIMBALL INTERCEPTOR
CONTRACT EN97004

GRAVITY SEWER PLAN AND PROFILE
STA. 86+00.00 TO STA. 104+00.00

SHEET NO. 5A OF 20
JOB NO. 690231
DRAWING NO. D4606-5A

PN= SHTE.DGN 7/10/97

PROFILE SCALE:
HORIZ. 1"=40'
VERT. 1"=8'

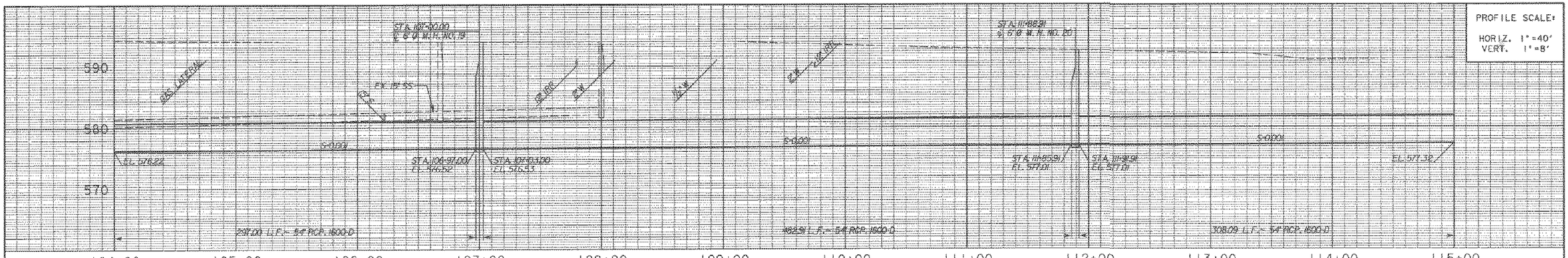

HYDRAULIC DATA

FROM STA TO STA.	DIAMETER (inch)	DEPTH (ft)	VELOCITY (ft/sec)	d/D	SLOPE
104+00 TO 115+00	54"				0.001
Qmin.= 11.82		1.67	3.40	0.37	
Qmax.= 53.68		FULL	FULL	FULL	
Qave.= 36.89		3.39	4.44	0.75	

* Q's ARE IN MILLION GALLONS PER DAY

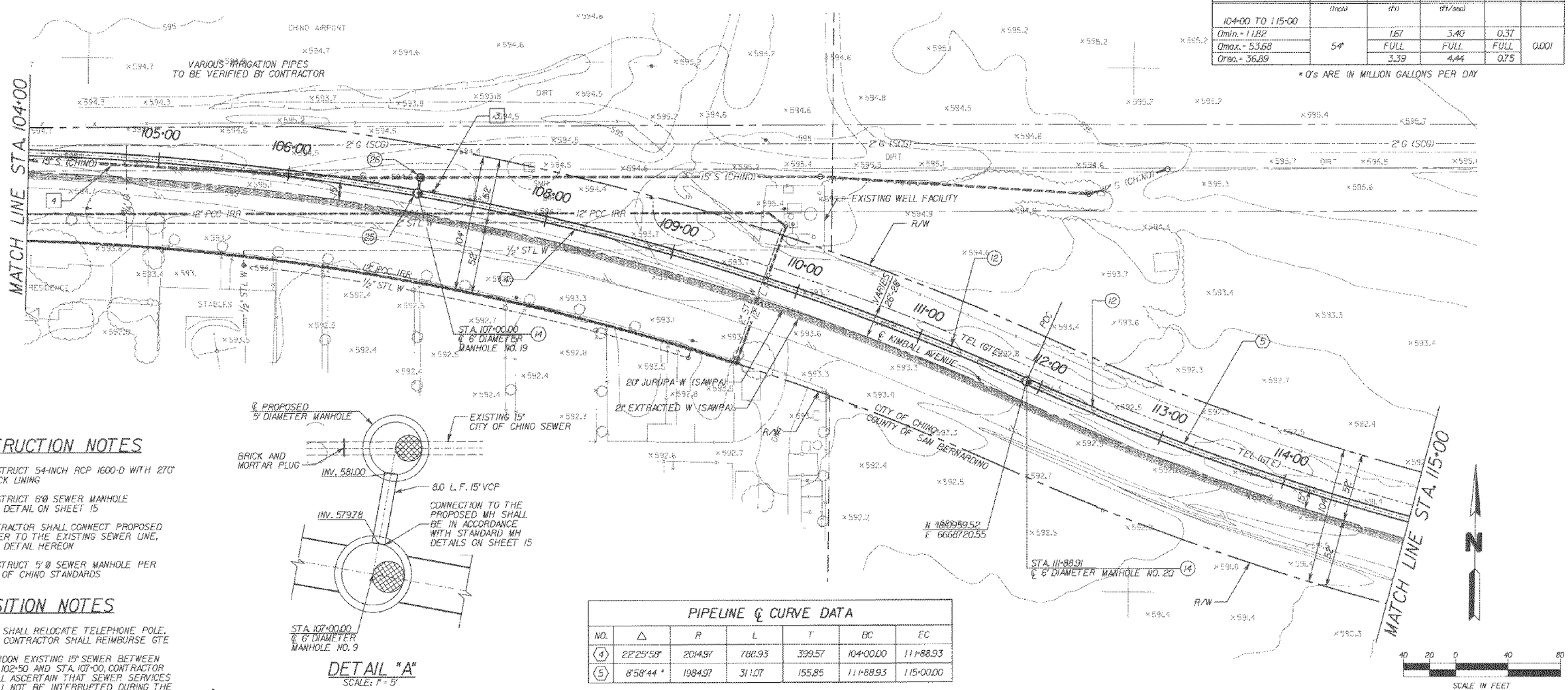

DETAIL "A"
SCALE: 1" = 5'

CONSTRUCTION NOTES

(12) CONSTRUCT 54-INCH RCP 1600-D WITH 270° T-LOCK LINING

(14) CONSTRUCT 6'Ø SEWER MANHOLE PER DETAIL ON SHEET 15

(25) CONTRACTOR SHALL CONNECT PROPOSED SEWER TO THE EXISTING SEWER LINE, SEE DETAIL HEREON

(26) CONSTRUCT 5'Ø SEWER MANHOLE PER CITY OF CHINO STANDARDS

DISPOSITION NOTES

[3] GTE SHALL RELOCATE TELEPHONE POLE. THE CONTRACTOR SHALL REIMBURSE GTE

[4] ABANDON EXISTING 15" SEWER BETWEEN STA. 102+50 AND STA. 107+00. CONTRACTOR SHALL ASCERTAIN THAT SEWER SERVICES SHALL NOT BE INTERRUPTED DURING THE INSTRUCTION OF NEW CONNECTION

PIPELINE ℄ CURVE DATA

NO.	Δ	R	L	T	BC	EC
(4)	22°25'58"	2014.97	788.93	399.57	104+00.00	111+88.93
(5)	8°58'44"	1984.97	311.07	155.85	111+88.93	115+00.00

AKM CONSULTING ENGINEERS
101 PACIFICA, SUITE 150
IRVINE, CA 92618
(949) 753-7333

REGISTERED PROFESSIONAL ENGINEER JULIE E. MACDONALD No. 57886 CIVIL 3/31/99 STATE OF CALIFORNIA

Designed C.Y./D.M. 8/98
Drawn AB/SWP/BS/JM 8/98
Checked J.E.M. 8/98
Date

REV. NO.	DATE	BY	APRVD	DESCRIPTION

REVIEWED BY:
M. T. Mansourian
Project Manager for CBMWD
Date 8-20-98

SCALE
AS SHOWN
Bar Scale shown below is one inch on original drawing. If NOT one inch on this sheet, adjust scales accordingly.
0" 1"

CHINO BASIN MUNICIPAL WATER DISTRICT
LOCATION
9400 Cherry Avenue, Building A
Fontana, California 92335
Telephone (909) 357-0241
MAILING ADDRESS
Post Office Box 697
Rancho Cucamonga, California 91730

AKM CONSULTING ENGINEERS
KIMBALL INTERCEPTOR
CONTRACT EN97004
GRAVITY SEWER PLAN AND PROFILE
STA. 104+00.00 TO STA. 115+00.0

SHEET NO. 6 OF 20
JOB NO. 690231
DRAWING NO. 04606-6

PMP SHT7.DGN 7/10/97

PROFILE SCALE:
HORIZ. 1"=40'
VERT. 1"=8'

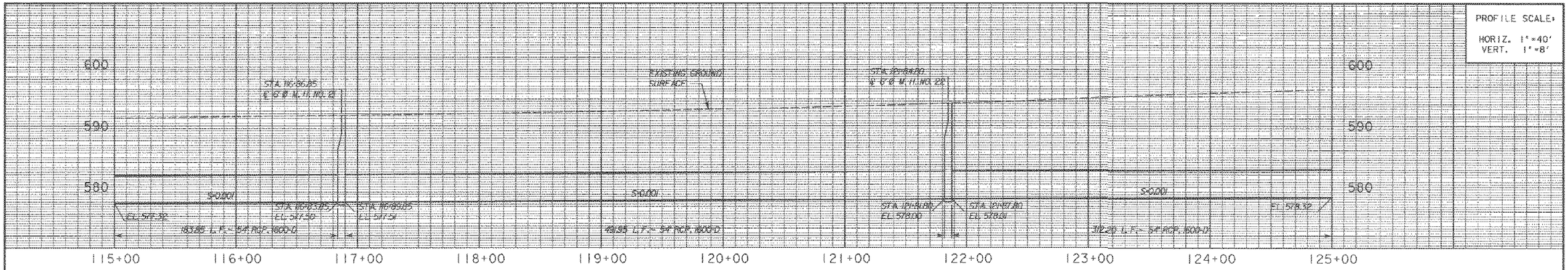

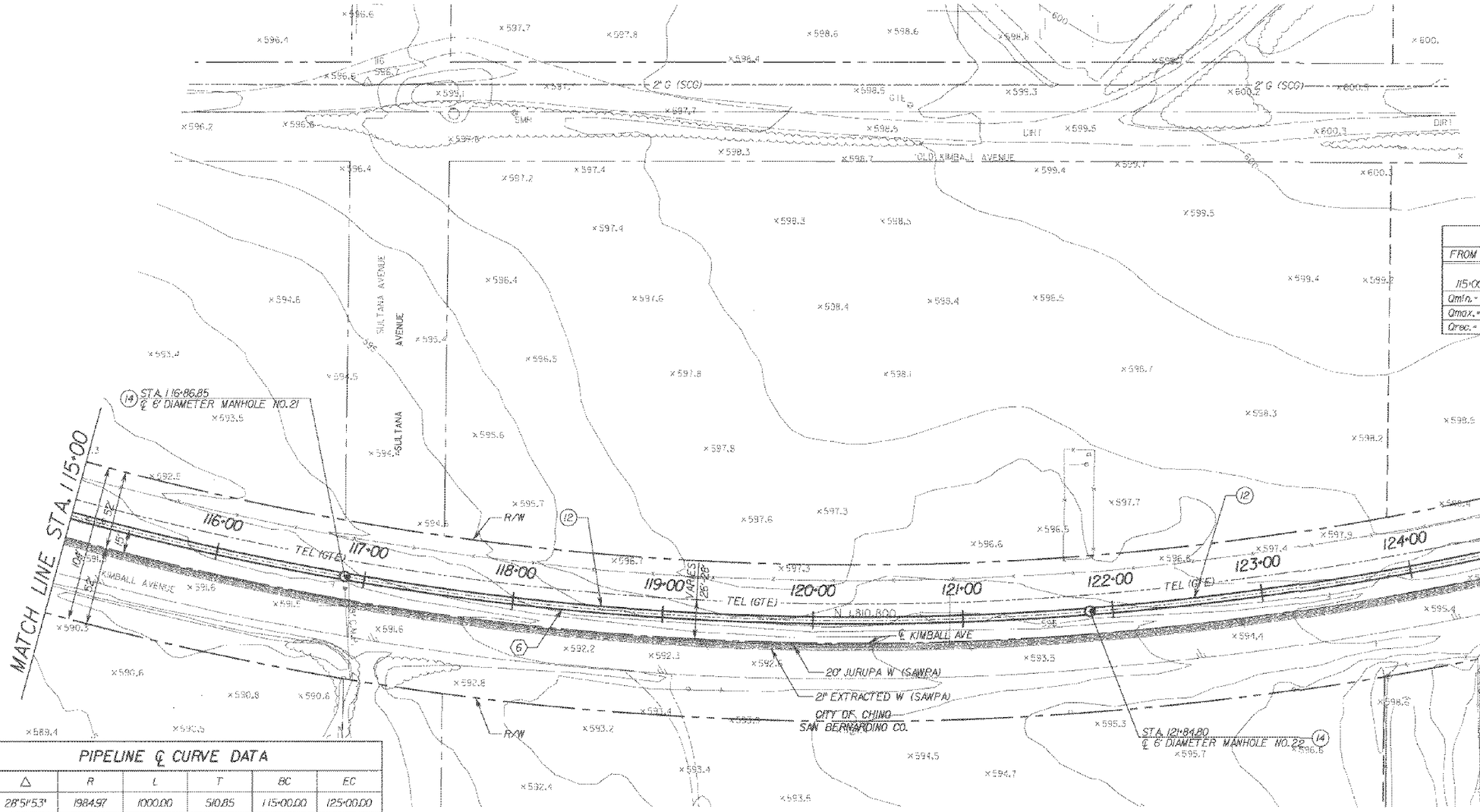

CONSTRUCTION NOTES

(12) CONSTRUCT 54-INCH RCP 1600-D WITH 270°T-LOCK LINING

(14) CONSTRUCT 6'Ø SEWER MANHOLE PER DETAIL ON SHEET 15

HYDRAULIC DATA

FROM STA.	TO STA.	DIAMETER	DEPTH	VELOCITY	d/D	SLOPE
115+00	TO 125+00	(inch)	(ft)	(ft/sec)		
Qmin.= 11.82			1.57	3.40	0.37	
Qmax.= 53.68		54"	FULL	FULL	FULL	0.001
Qrec.= 36.89			3.39	4.44	0.75	

* Q's ARE IN MILLION GALLONS PER DAY

PIPELINE ℄ CURVE DATA

NO.	Δ	R	L	T	BC	EC
(6)	28°51'53"	1984.97	1000.00	510.85	115+00.00	125+00.00

AKM CONSULTING ENGINEERS
101 PACIFICA, SUITE 150
IRVINE, CA 92618
(949) 753-7333

REGISTERED PROFESSIONAL ENGINEER — JAMES E. MICHAEL — No. 36878 — CIVIL — STATE OF CALIFORNIA

Designed C.Y./D.M. 8/98
Drawn AB/SWP/BS/JM 8/98
Checked J.E.M. 8/98
Date

REV. NO.	DATE	BY	APRVD	DESCRIPTION

REVIEWED BY:
Project Manager for CBMWD
Date 8-20-98

SCALE
AS SHOWN
Bar Scale shown below is one inch on original drawing. If NOT one inch on this sheet, adjust scales accordingly.
0" ——— 1"

CHINO BASIN MUNICIPAL WATER DISTRICT
LOCATION: 9400 Cherry Avenue, Building A, Fontana, California 92335, Telephone (909) 357-0241
MAILING ADDRESS: Post Office Box 697, Rancho Cucamonga, California 91730

AKM CONSULTING ENGINEERS
KIMBALL INTERCEPTOR
CONTRACT EN97004
GRAVITY SEWER PLAN AND PROFILE
STA. 115+00.00 TO STA. 125+00.00

SHEET NO. 7 OF 20
JOB NO. 690231
DRAWING NO. 04606-7

PNP SHT8.DGN 7/10/97

PROFILE SCALE:
HORIZ. 1"=40'
VERT. 1"=8'

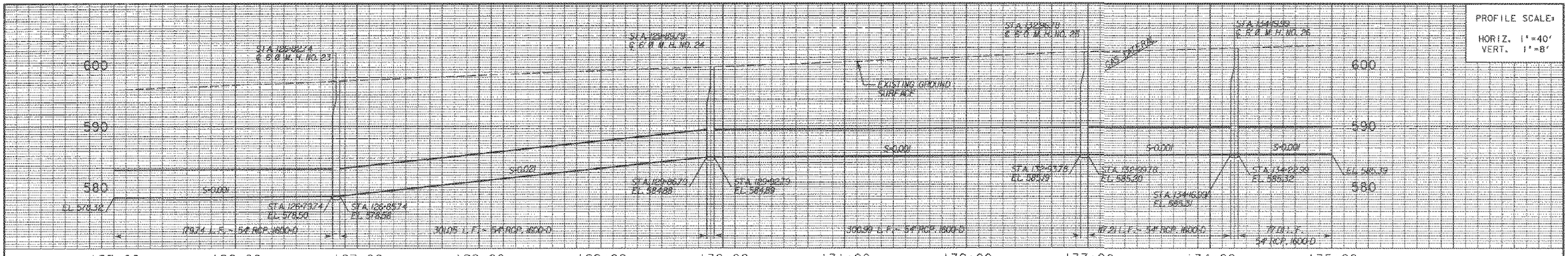

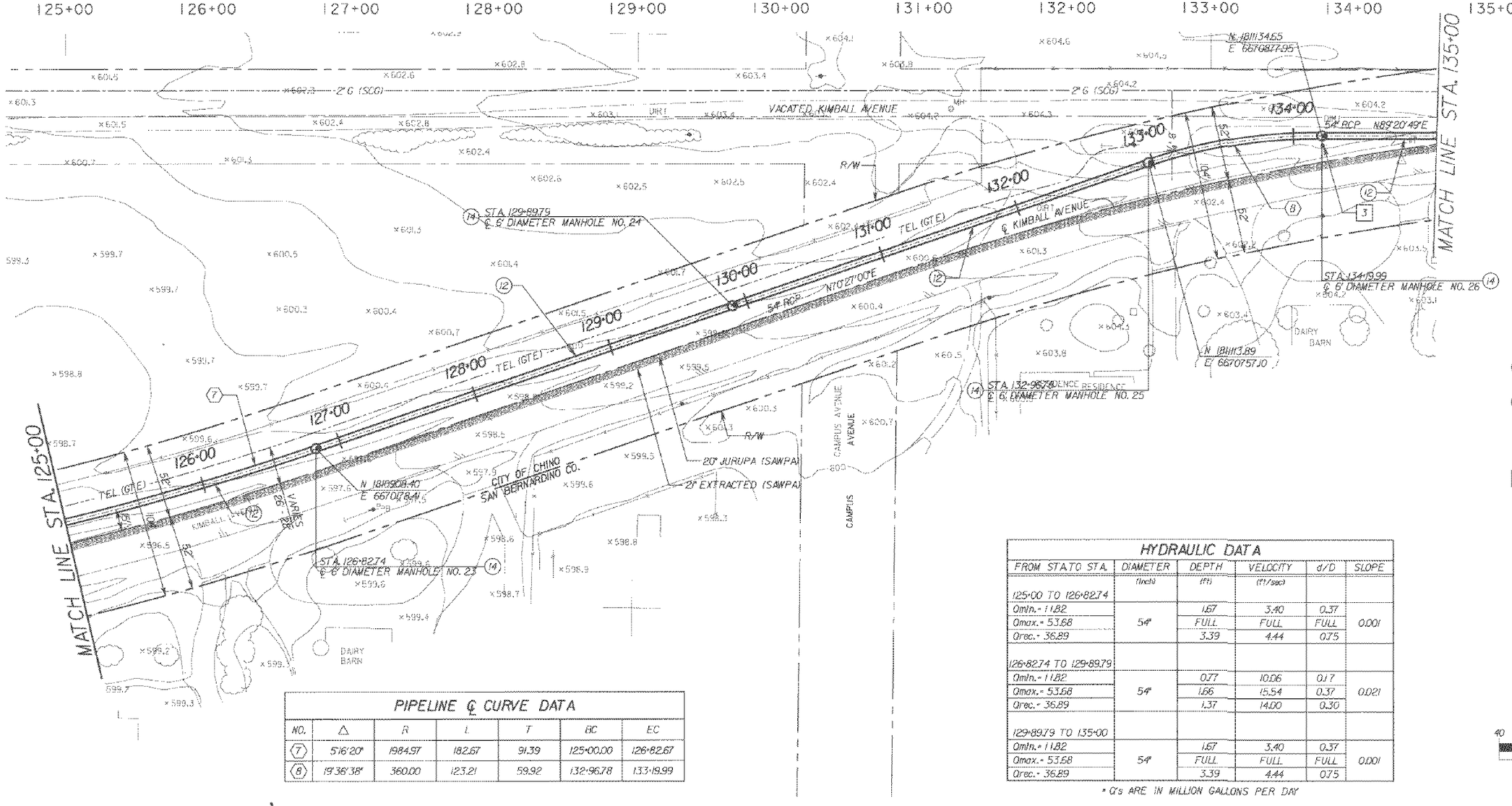

CONSTRUCTION NOTES

(12) — CONSTRUCT 54-INCH RCP 1600-D WITH 270° T-LOCK LINING

(14) — CONSTRUCT 6' Ø SEWER MANHOLE PER DETAIL ON SHEET 15

DISPOSITION NOTES

[3] — GTE SHALL RELOCATE TELEPHONE POLE, THE CONTRACTOR SHALL REIMBURSE GTE

PIPELINE ℄ CURVE DATA

NO.	Δ	R	L	T	BC	EC
(7)	5°16'20"	1984.97	182.67	91.39	125+00.00	126+82.67
(8)	19°36'38"	360.00	123.21	59.92	132+96.78	133+19.99

HYDRAULIC DATA

FROM STA TO STA.	DIAMETER (inch)	DEPTH (ft)	VELOCITY (ft/sec)	d/D	SLOPE
125+00 TO 126+82.74					
Qmin.= 11.82	54"	1.67	3.40	0.37	0.001
Qmax.= 53.68		FULL	FULL	FULL	
Qrec.= 36.89		3.39	4.44	0.75	
126+82.74 TO 129+89.79					
Qmin.= 11.82	54"	0.77	10.06	0.17	0.021
Qmax.= 53.68		1.66	15.54	0.37	
Qrec.= 36.89		1.37	14.00	0.30	
129+89.79 TO 135+00					
Qmin.= 11.82	54"	1.67	3.40	0.37	0.001
Qmax.= 53.68		FULL	FULL	FULL	
Qrec.= 36.89		3.39	4.44	0.75	

* Q's ARE IN MILLION GALLONS PER DAY

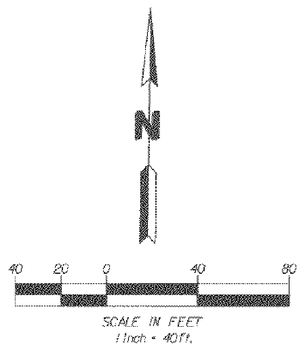

AKM CONSULTING ENGINEERS
101 PACIFICA, SUITE 150
IRVINE, CA 92618
(949) 753-7333

REGISTERED PROFESSIONAL ENGINEER — JAMES E. SIMMONS — No. 43888 — 9/30/98 — CIVIL — STATE OF CALIFORNIA

Designed C.Y./D.W. 8/98
Drawn AB/SWP/BS/JM 8/98
Checked J.E.M. 8/98
Date

REV. NO.	DATE	BY	APRVD	DESCRIPTION

REVIEWED BY:
M. T. Manager
Project Manager for CBMWD
Dat 8-20-98

SCALE
AS SHOWN
Bar Scale shown below is one inch on original drawing. If NOT one inch on this sheet, adjust scales accordingly.
0" ——— 1"

CHINO BASIN MUNICIPAL WATER DISTRICT
LOCATION: 9400 Cherry Avenue- Building A, Fontana, California 92335, Telephone (909) 357-0241
MAILING ADDRESS: Post Office Box 697, Rancho Cucamonga, California 91730

AKM CONSULTING ENGINEERS
KIMBALL INTERCEPTOR
CONTRACT EN97004
GRAVITY SEWER PLAN AND PROFILE
STA. 125+00.00 TO STA. 135+00.00

SHEET NO. 8 OF 20
JOB NO. 690231
DRAWING NO. D4606-8

PROFILE SCALE:
HORIZ. 1"=40'
VERT. 1"=8'

HYDRAULIC DATA

FROM STA.	TO STA.	DIAMETER	DEPTH	VELOCITY	d/D	SLOPE
		(inch)	(ft)	(ft/sec)		
135+00.00	153+00.00					
Qmin.= 11.82			1.67	3.40	0.37	
Qmax.= 53.68		54"	FULL	FULL	FULL	0.001
Qave.= 36.89			3.39	4.44	0.75	

* Q's ARE IN MILLION GALLONS PER DAY

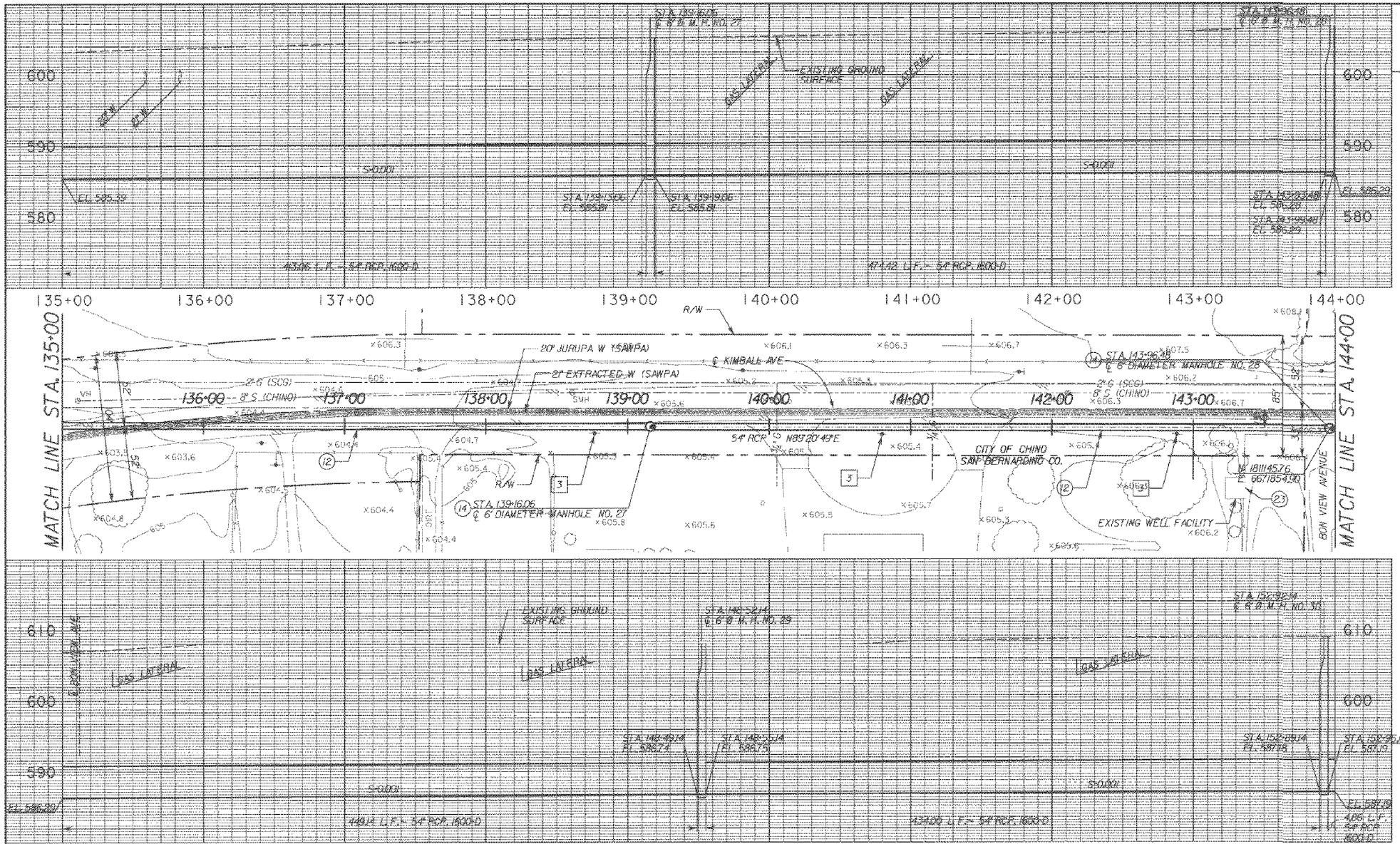

CONSTRUCTION NOTES

(12) — CONSTRUCT 54-INCH RCP 1600-D WITH 270°T-LOCK LINING

(14) — CONSTRUCT 6'Ø SEWER MANHOLE PER DETAIL ON SHEET 15

(23) — PROTECT IN PLACE

DISPOSITION NOTES

[3] — GTE SHALL RELOCATE TELEPHONE POLE, THE CONTRACTOR SHALL REIMBURSE GTE

AKM CONSULTING ENGINEERS
AKM CONSULTING ENGINEERS
101 PACIFICA, SUITE 150
IRVINE, CA 92618
(949) 753-7333

Designed C.Y./D.M. 8/98
Drawn AR/SWP/DS/JM 8/98
Checked J.E.M. 8/98
Date

REV. NO.	DATE	BY	APRVD	DESCRIPTION

REVIEWED BY:
M. T. Meissner
Project Manager for CBMWD
Date 3-20-98

SCALE
AS SHOWN
Bar Scale shown below is one inch on original drawing. If NOT one inch on this sheet, adjust scales accordingly.
0" 1"

CHINO BASIN MUNICIPAL WATER DISTRICT
LOCATION: 9400 Cherry Avenue, Building A, Post Office Box 697, Fontana, California 92335, Telephone (909) 357-0241
MAILING ADDRESS: Rancho Cucamonga, California 91729

AKM CONSULTING ENGINEERS
KIMBALL INTERCEPTOR
CONTRACT EN97004
GRAVITY SEWER PLAN AND PROFILE
STA. 135+00.00 TO STA. 153+00.00

SHEET NO. 9 OF 20
JOB NO. 690231
DRAWING NO. D4606-9

P:\PSHT10.DGN 7/10/97

PNPSH-11.DGN 7-10-97

PROFILE SCALE:
HORIZ. 1"=40'
VERT. 1"=8'

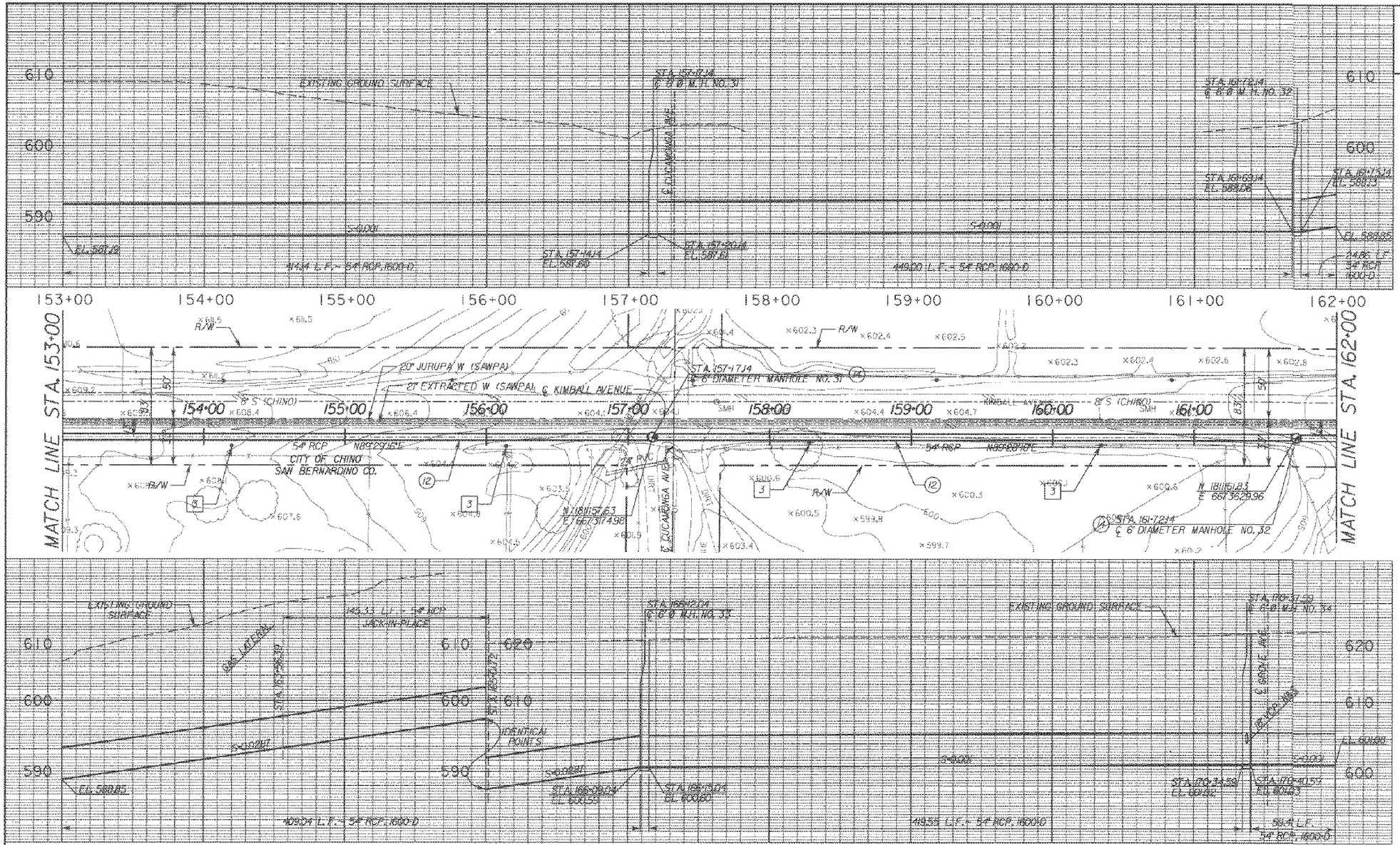

HYDRAULIC DATA

FROM STA. TO STA.	DIAMETER (inch)	DEPTH (ft)	VELOCITY (ft/sec)	d/D	SLOPE
153+00 TO 161+72.14					
Qmin.= 11.82	54"	1.67	3.40	0.37	0.001
Qmax.= 53.68		FULL	FULL	FULL	
Qrec.= 36.89		3.39	4.44	0.75	
161+72.14 TO 166+12.04					
Qmin.= 11.82	54"	0.71	11.26	0.16	0.029
Qmax.= 53.68		1.53	17.46	0.34	
Qrec.= 36.89		1.26	15.71	0.28	
166+12.04 TO 171+00					
Qmin.= 11.53	54"	1.65	3.38	0.37	0.001
Qmax.= 53.11		FULL	FULL	FULL	
Qrec.= 36.14		3.34	4.42	0.74	

* Q's ARE IN MILLION GALLONS PER DAY

CONSTRUCTION NOTES

(12) CONSTRUCT 54-INCH RCP 1600-D WITH 270° T-LOCK LINING

(14) CONSTRUCT 6'Ø SEWER MANHOLE PER DETAIL ON SHEET 15

(20) CONSTRUCT 6'Ø SEWER MANHOLE PER DETAIL (2/17)

(23) PROTECT IN PLACE

DISPOSITION NOTES

[2] THE GAS COMPANY SHALL RELOCATE GAS LINE. THE CONTRACTOR SHALL REIMBURSE THE GAS COMPANY

[3] GTE SHALL RELOCATE TELEPHONE POLE. THE CONTRACTOR SHALL REIMBURSE GTE

PIPELINE ℄ CURVE DATA

NO.	Δ	R	L	T	BC	EC
(9)	3°15'36"	180.00	10.24	5.12	162+84.59	162+94.83
(10)	3°16'18"	180.00	10.28	5.14	163+46.11	163+56.39
(11)	2°40'14"	180.00	8.39	4.20	165+01.72	165+10.11
(12)	2°40'14"	180.00	8.39	4.20	165+76.84	165+85.23

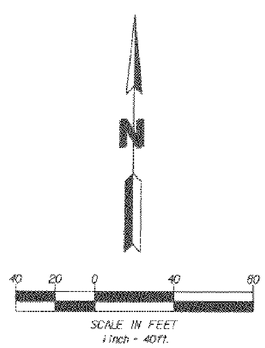

AKM CONSULTING ENGINEERS
101 PACIFICA, SUITE 150
IRVINE, CA 92618
(949) 753-7333

REGISTERED PROFESSIONAL ENGINEER JAMES E. ACOSS No. 57355 CIVIL 3/31/99 STATE OF CALIFORNIA

Designed C.Y./D.M. 8/98
Drawn AB/SWP/BS/JM 8/98
Checked J.E.M. 8/98
Date

REV. NO.	DATE	BY	APRVD	DESCRIPTION

REVIEWED BY:
M. T. Mortensen Date 8-20-98
Project Manager for CBMWD

SCALE
AS SHOWN
Bar Scale shown below is one inch on original drawing. If NOT one inch on this sheet, adjust scales accordingly.
0" 1"

CHINO BASIN MUNICIPAL WATER DISTRICT
LOCATION: 9400 Cherry Avenue, Building A, Fontana, California 92335, Telephone (909) 357-0241
MAILING ADDRESS: Post Office Box 697, Rancho Cucamonga, California 91730

AKM CONSULTING ENGINEERS
KIMBALL INTERCEPTOR
CONTRACT EN97004
GRAVITY SEWER PLAN AND PROFILE
STA. 153+00.00 TO STA. 170+99.90

SHEET NO. 10 OF 20
JOB NO. 690231
DRAWING NO. 04606-10

PNP SHT12.DGN 7/10/97

PROFILE SCALE:
HORIZ. 1"=40'
VERT. 1"=8'

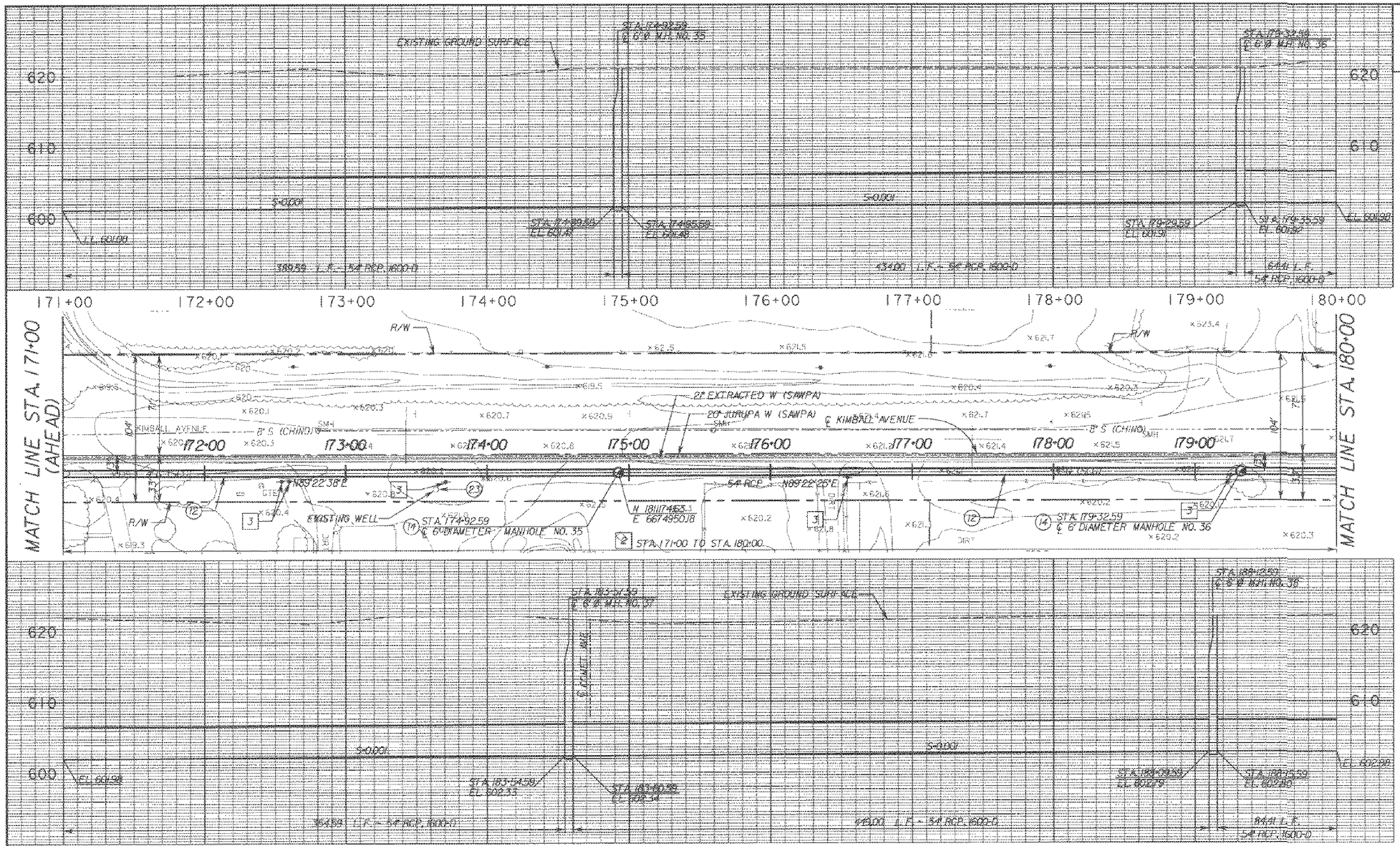

HYDRAULIC DATA

FROM STA.	TO STA.	DIAMETER (inch)	DEPTH (ft)	VELOCITY (ft/sec)	d/D	SLOPE
171+00	TO 189+00					
Qmin.= 11.53			1.65	3.38	0.37	
Qmax.= 53.11		54"	FULL	FULL	FULL	0.001
Qrec.= 36.14			3.34	4.42	0.74	

* Q's ARE IN MILLION GALLONS PER DAY.

CONSTRUCTION NOTES

(12) — CONSTRUCT 54-INCH RCP 1600-D WITH 270°T-LOCK LINING

(14) — CONSTRUCT 6'Ø SEWER MANHOLE PER DETAIL ON SHEET 15

(23) — PROTECT IN PLACE

DISPOSITION NOTES

[2] — THE GAS COMPANY SHALL RELOCATE GAS LINE. THE CONTRACTOR SHALL REIMBURSE THE GAS COMPANY

[3] — GTE SHALL RELOCATE TELEPHONE POLE. THE CONTRACTOR SHALL REIMBURSE GTE

N

40 20 0 40 80
SCALE IN FEET
1 inch = 40ft.

NOTE: ALL STREETS EAST OF GROVE AVENUE IS UNDER JURISDICTION OF SAN BERNARDINO COUNTY

AKM CONSULTING ENGINEERS
101 PACIFICA, SUITE 150
IRVINE, CA 92618
(949) 753-7333

JAMES E. MARTIN — No. 35908 — CIVIL — STATE OF CALIFORNIA — REGISTERED PROFESSIONAL ENGINEER

Designed C.Y./D.M. 8/98
Drawn AB/SMP/BS/JM 8/98
Checked J.C.M. 8/98
Date

REV. NO.	DATE	BY	APRVD	DESCRIPTION

REVIEWED BY:
M. T. Harrison
Project Manager for CBMWD
Date 8-28-98

SCALE
AS SHOWN
Bar Scale shown below is one inch on original drawing. If NOT one inch on this sheet, adjust scales accordingly.
0" 1"

CHINO BASIN MUNICIPAL WATER DISTRICT
LOCATION: 9400 Cherry Avenue, Building A, Fontana, California 92335, Telephone (909) 357-0241
MAILING ADDRESS: Post Office Box 697, Rancho Cucamonga, California 91730

AKM CONSULTING ENGINEERS
KIMBALL INTERCEPTOR
CONTRACT EN97004
GRAVITY SEWER PLAN AND PROFILE
STA. 171+00.00 TO STA. 189+00.00

SHEET NO. 11 OF 20
JOB NO. 690231
DRAWING NO. 04606-11

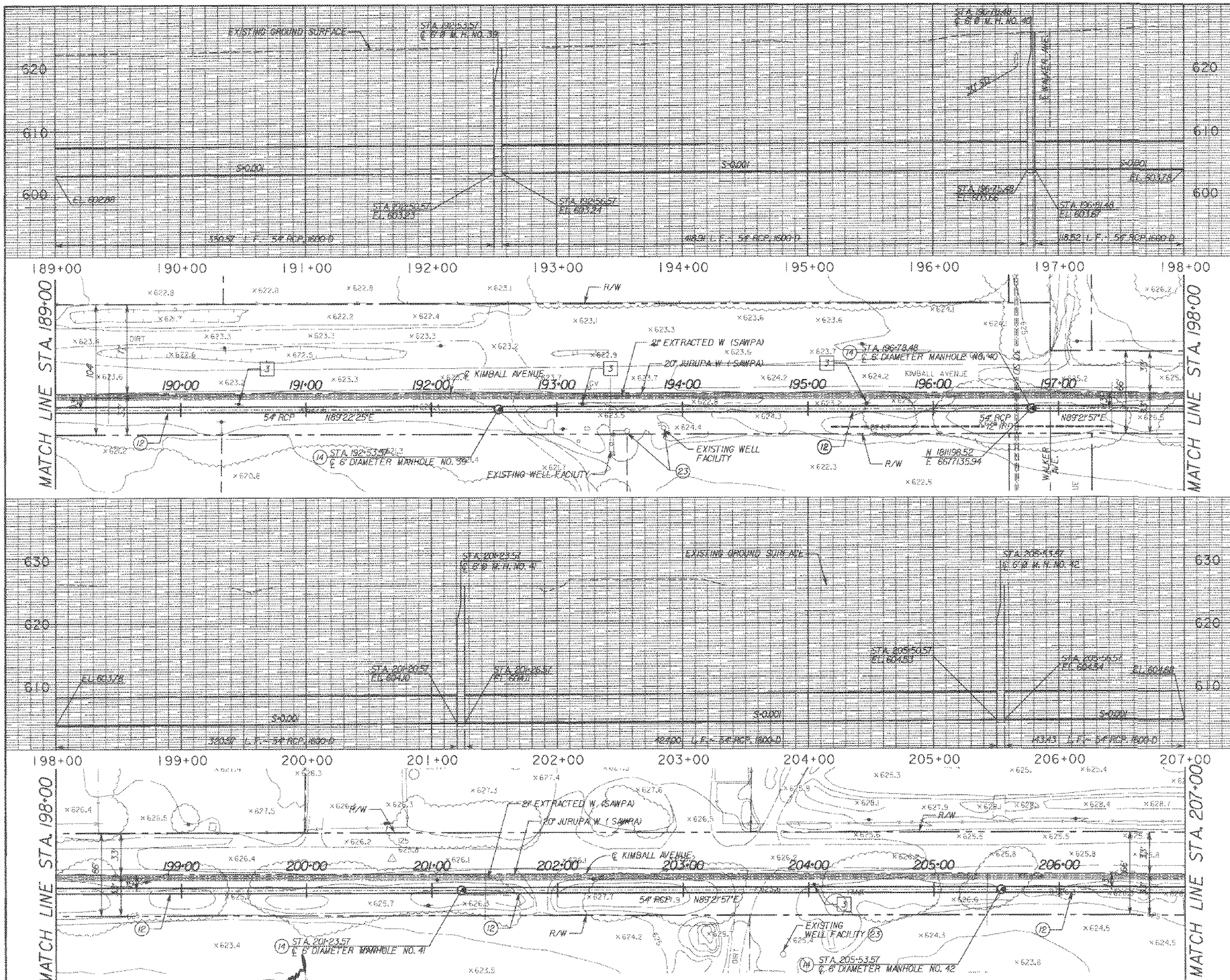

PROFILE SCALE:
HORIZ. 1"=40'
VERT. 1"=8'

HYDRAULIC DATA

FROM STA. TO STA.	DIAMETER	DEPTH	VELOCITY	d/D	SLOPE
	(inch)	(ft)	(ft/sec)		
189+00 TO 207+00					
Qmin.= 11.53		1.65	3.38	0.37	
Qmax.= 53.11	54"	FULL	FULL	FULL	0.001
Qrec.= 36.14		3.34	4.42	0.74	

* Q's ARE IN MILLION GALLONS PER DAY.

CONSTRUCTION NOTES

(12) CONSTRUCT 54-INCH RCP 1600-D WITH 270° T-LOCK LINING

(14) CONSTRUCT 6' Ø SEWER MANHOLE PER DETAIL ON SHEET 15

(23) PROTECT IN PLACE

DISPOSITION NOTES

[3] GTE SHALL RELOCATE TELEPHONE POLE. THE CONTRACTOR SHALL REIMBURSE GTE

N

40 20 0 40 80
SCALE IN FEET
1 inch = 40 ft.

AKM CONSULTING ENGINEERS
AKM CONSULTING ENGINEERS
101 PACIFICA, SUITE 150
IRVINE, CA 92618
(949) 753-7333

REGISTERED PROFESSIONAL ENGINEER
JAMIE E. ROBERTS
40969
Exp. 3/31/98
CIVIL
STATE OF CALIFORNIA

Designed C.Y./D.M. 8/98
Drawn AB/SWP/BS/JM 8/98
Checked J.E.M. 8/98
Date

REV. NO.	DATE	BY	APRVD	DESCRIPTION

REVIEWED BY:
M. T. Manzoni
Project Manager for CBMWD
Date 8-20-98

SCALE
AS SHOWN
Bar Scale shown below is one inch on original drawing. If NOT one inch on this sheet, adjust scales accordingly.
0" 1"

CHINO BASIN
MUNICIPAL WATER DISTRICT
LOCATION
9400 Cherry Avenue, Building A
Fontana, California 92335
Telephone (909) 357-0241
MAILING ADDRESS
Post Office Box 697
Rancho Cucamonga, California 91730

AKM CONSULTING ENGINEERS
KIMBALL INTERCEPTOR
CONTRACT EN97004
GRAVITY SEWER PLAN AND PROFILE
STA. 189+00.00 TO STA. 207+00.00

SHEET NO. 12 OF 20
JOB NO. 690231
DRAWING NO. D4606-12

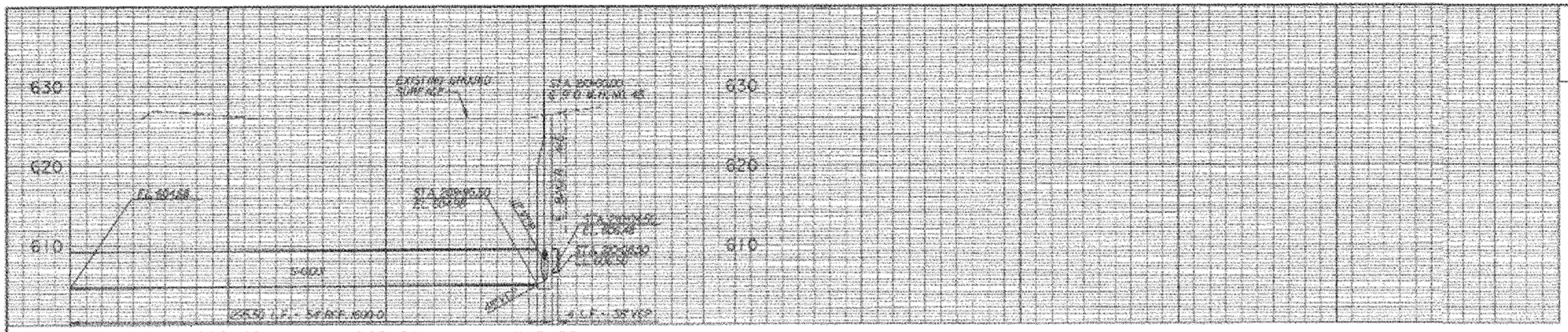

PROFILE SCALE:

HORIZ. 1"=40'
VERT. 1"=8'

HYDRAULIC DATA					
FROM STA. TO STA.	DIAMETER	DEPTH	VELOCITY	d/D	SLOPE
	(inch)	(ft)	(ft/sec)		
207+00 TO 210+21.21					
Qmin.- 11.53	54"	1.65	3.38	0.37	0.001
Qmax.- 53.11		FULL	FULL	FULL	
Qrec.- 36.14		3.34	4.42	0.74	

* Q's ARE IN MILLION GALLONS PER DAY.

CONSTRUCTION NOTES

(12) — CONSTRUCT 54-INCH RCP 1600-D WITH 270°T-LOCK LINING

(16) — CONSTRUCT 9'Ø SEWER MANHOLE PER DETAIL (3/77)

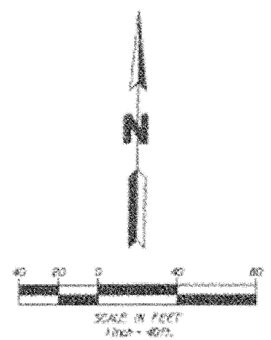

AKM CONSULTING ENGINEERS
AKM CONSULTING ENGINEERS
101 PACIFICA, SUITE 150
IRVINE, CA 92618
(949) 753-7333

Designed C.Y./D.M. 8/98
Drawn AB/SWP/BS/JM 8/98
Checked J.E.N. 8/98
Date

REV. NO.	DATE	BY	APRVD	DESCRIPTION

REVIEWED BY:
M. T. Mansour Date 8-20-98
Project Manager for CBWD

SCALE
AS SHOWN
For Scale shown below is one inch on original drawing. If NOT one inch on this sheet, adjust scales accordingly.
0" 1"

CHINO BASIN
MUNICIPAL WATER DISTRICT
LOCATION
9400 Cherry Avenue, Building A
Fontana, California 92335
Telephone (909) 797-0041
MAILING ADDRESS
Post Office Box 697
Rancho Cucamonga, California 91730

AKM CONSULTING ENGINEERS
KIMBALL INTERCEPTOR
CONTRACT EN97004

GRAVITY SEWER PLAN AND PROFILE
STA. 207+00.00 TO STA. 210+00.00

SHEET NO. 13 OF 20
JOB NO. 690231
DRAWING NO. 04606-13

DETAIL53.DGN 7/10/97

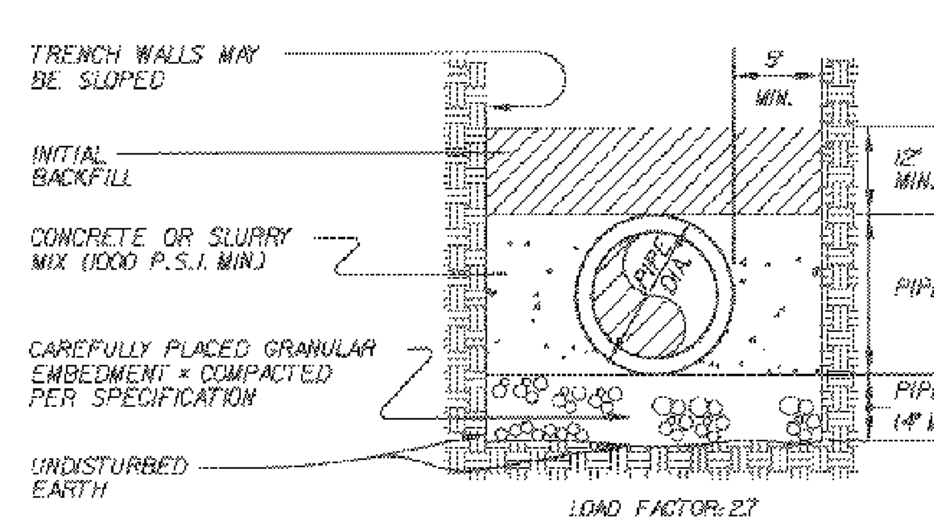

LOAD FACTOR: 2.7

NOTE: THIS TYPE OF CONSTRUCTION REQUIRES THE CONCRETE TO EXTEND FROM THE PIPE TO THE TRENCH WALL. CAUTION: NOT RECOMMENDED WHERE NATIVE SOILS ARE EXPANSIVE

CLASS A-III - SIDECRADLING

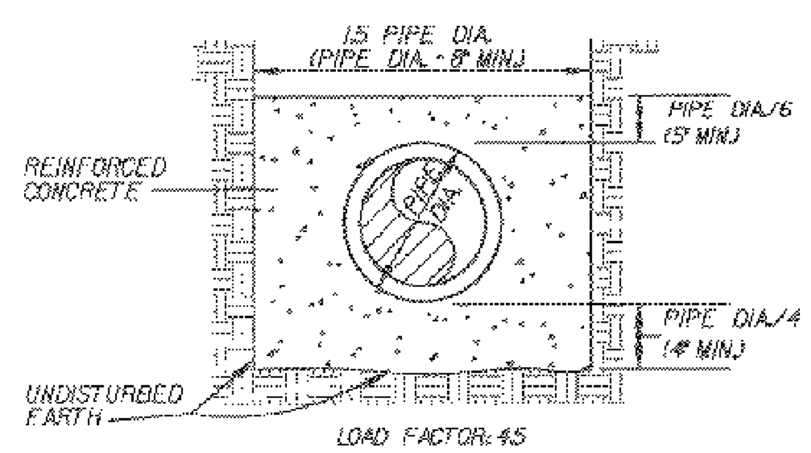

LOAD FACTOR: 4.5

NOTE: THIS TYPE OF CONSTRUCTION SHOULD BE DESIGNED BY A REGISTERED STRUCTURAL ENGINEER, AND MAY YIELD HIGHER LOAD FACTORS THAN INDICATED.

CLASS A-IV
CONCRETE ENCASEMENT

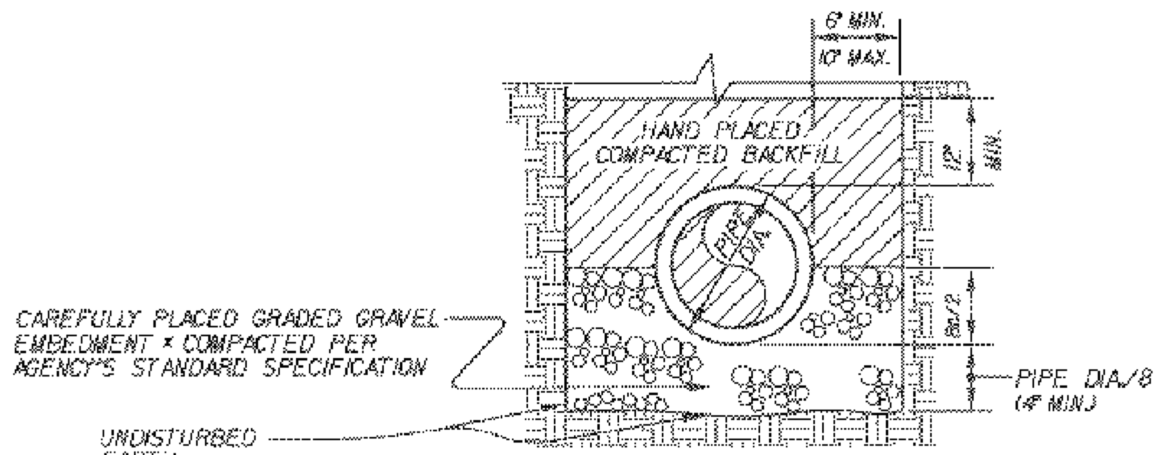

CLASS B
LOAD FACTOR 1.9

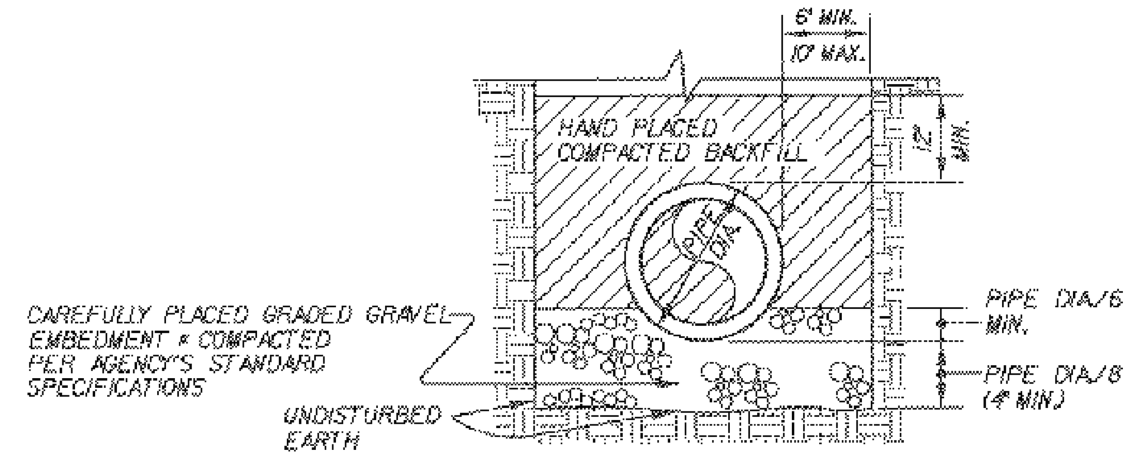

CLASS C
LOAD FACTOR 1.5

* GRANULAR EMBEDMENT:

COARSE GRAINED NATIVE SOILS OR IMPORTED SAND WITH A MINIMUM SAND EQUIVALENCE OF 30 AND OF SUCH SIZE THAT 90 TO 100 PERCENT WILL PASS A NO.4 SIEVE AND NO MORE THAN 5 PERCENT WILL PASS A NO.200 SIEVE.

NOTES

1. SLAG, PEA GRAVEL, OR OTHER ALTERNATIVE MATERIALS WILL NOT BE ACCEPTABLE IN LIEU OF GRANULAR EMBEDMENT.
2. TRENCH SHORING & TRENCH WALL SLOPING SHALL BE IN CONFORMANCE WITH STATE OF CALIFORNIA DEPARTMENT OF INDUSTRIAL SAFETY REQUIREMENTS AND THE REQUIREMENTS OF THE PROJECT SPECIFICATIONS.
3. MATERIALS, EMBEDMENT, PLACEMENT AND COMPACTION OF GRANULAR EMBEDMENT AND COMPACTED BACKFILL WILL CONFORM TO THE AGENCY'S STANDARD SPECIFICATION FOR PIPE BEDDING AND TRENCH BACKFILL.

BEDDING DETAIL NOTES

BEDDING DETAILS

NO SCALE

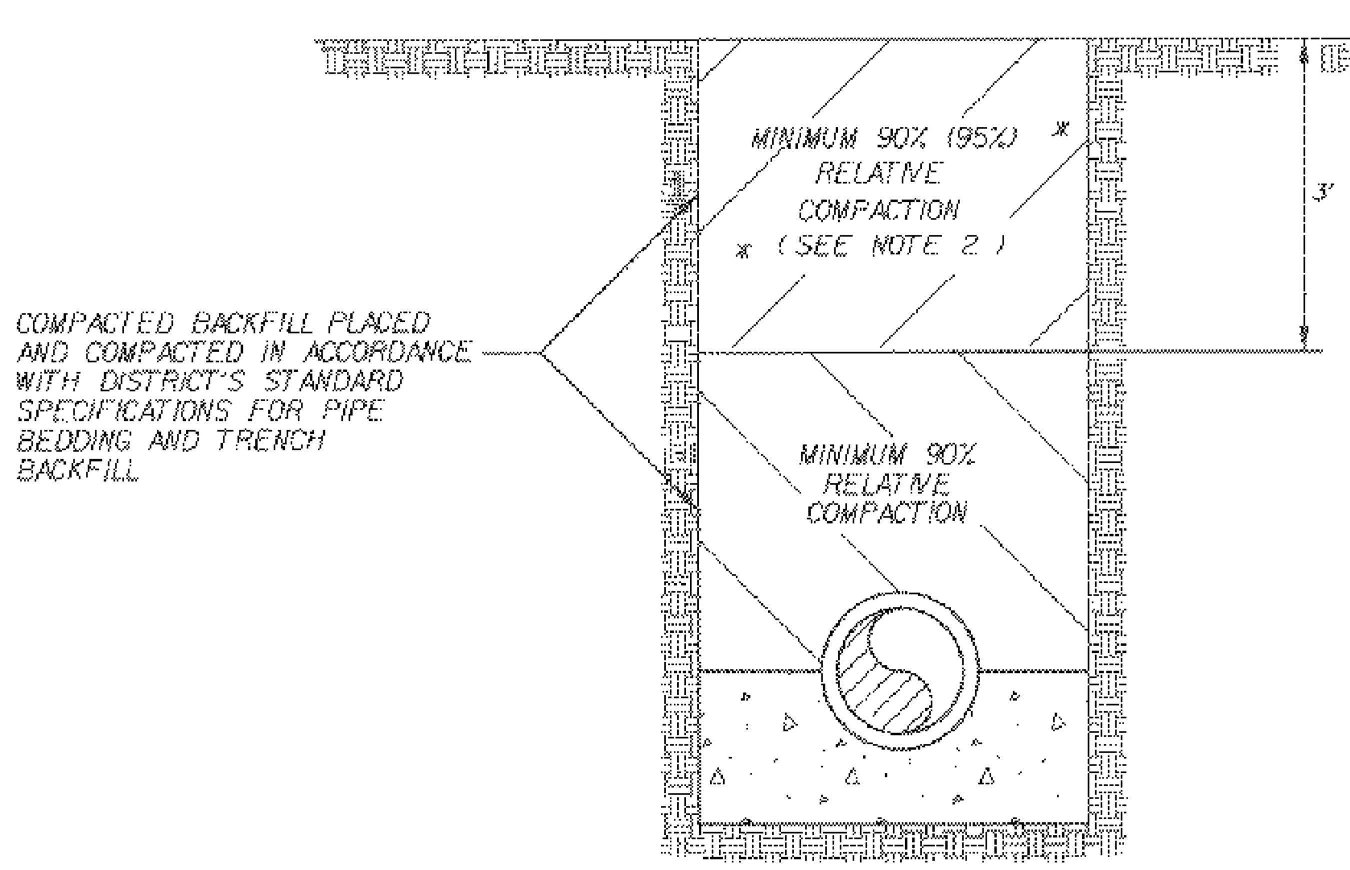

NOTES:

1. MATERIAL FOR COMPACTED BACKFILL WILL CONSIST OF SUITABLE JOB EXCAVATED MATERIALS, IMPORTED SOILS, OR GRADED GRAVEL AS DEFINED IN THE AGENCY'S STANDARD SPECIFICATION FOR PIPE BEDDING AND TRENCH BACKFILL. SLAG, PEA GRAVEL, CRUSHED ROCK, OR OTHER ALTERNATE MATERIALS WILL NOT BE ACCEPTABLE
2. COMPACTION UNDER THE STREET AND STRUCTURES SHALL BE 95%.
3. ALL PIPELINES CARRYING RECLAIMED WATER SHALL BE CLEARLY MARKED BY PIPE COLOR (PURPLE) OR BY PLACING IN BACKFILL PURPLE IDENTIFICATION TAPE. SAID TAPE SHALL BE NOT LESS THAN ONE FOOT OR MORE THAN TWO FEET ABOVE TOP OF PIPE.

BACKFILL DETAIL

NO SCALE

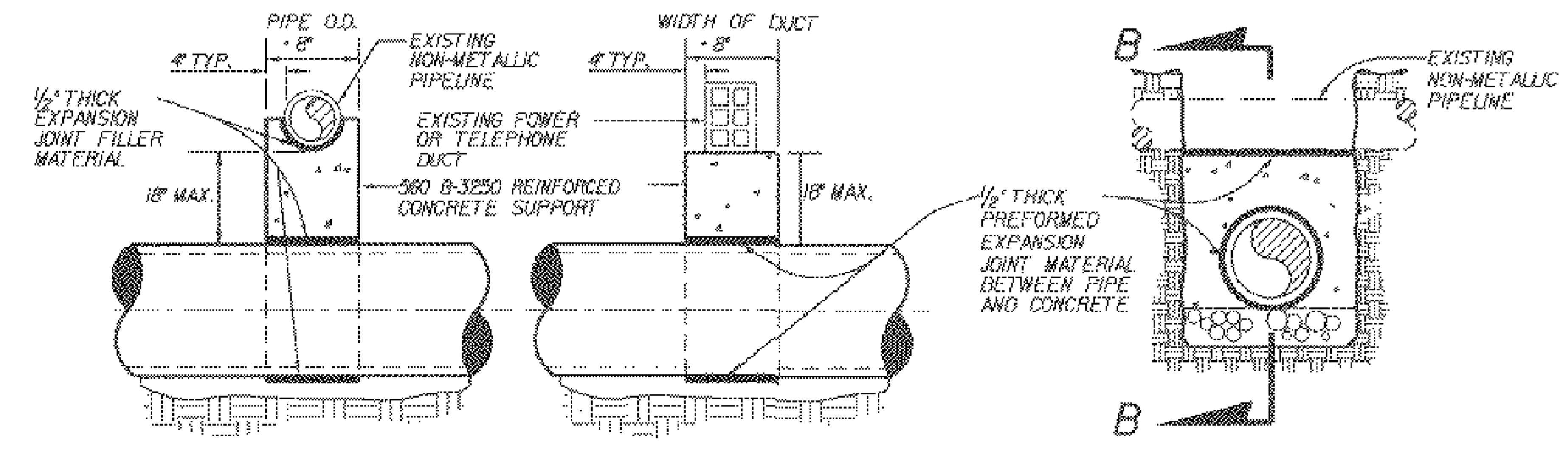

SECTION B-B

CASE 1

NO SCALE

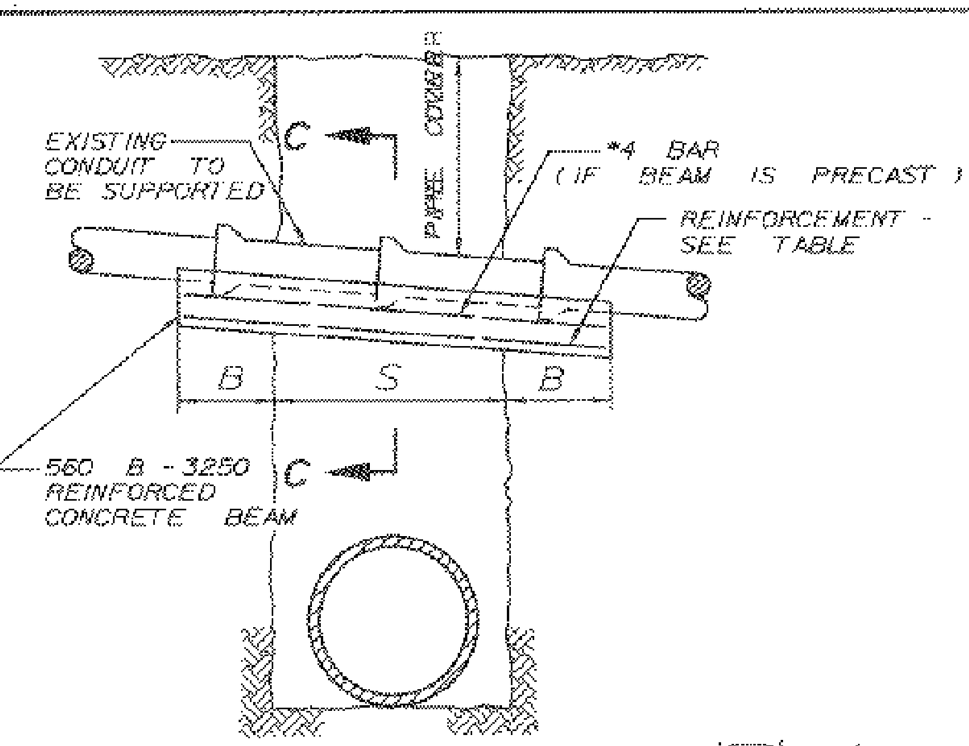

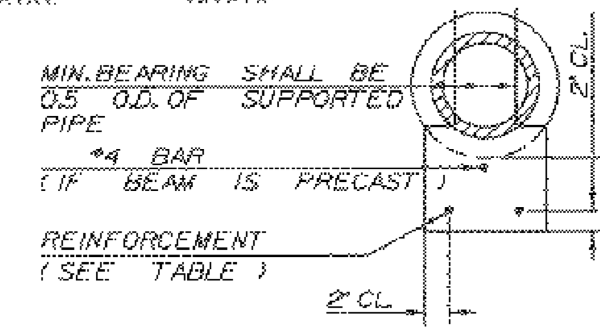

SECTION C - C

NOTES

1. WIDTH OF BEAM SHALL EQUAL O.D. + 8" OF SUPPORTED PIPE.
2. IF SUPPORTED PIPE IS BEDDED IN CONCRETE, BEAM WIDTH SHALL BE EQUAL BEDDING WIDTH.
3. IF BEAM IS PRECAST, ENDS OF BEAM SHALL BE FULLY BEDDED IN 420-C-2000 CONCRETE FOR LENGTH 'B'. THE BEDDING SHALL HAVE A MINIMUM THICKNESS OF 4". CLASS 'C' MORTAR SHALL BE PLACED BETWEEN TOP OF BEAM AND SUPPORTED PIPE TO PROVIDE MINIMUM BEARING SHOWN
4. THIS CASE IS PERMITTED ONLY IF THE TRENCH WALLS ARE FIRM AND UNYIELDING
5. MAXIMUM SPACING OF BARS SHALL BE 4" O.C.

REINFORCED CONCRETE BEAM (DIMENSIONS AND REINFORCEMENT)

S	PIPE COVER														
	0" TO 8'-0"			8'-1" TO 12'-0"			12'-1" TO 16'-0"			16'-1" TO 20'-0"			20'-1" TO 25'-0"		
	T	BARS	B	T	BARS	B	T	BARS	B	T	BARS	B	T	BARS	B
0" TO 4'-0"	8"	#4	1'-6"	8"	#4	1'-6"	9"	#4	1'-6"	10"	#4	1'-6"	10 1/2	#4	1'-6"
4'-1" TO 5'-0"	8"	#4	1'-6"	9 1/2	#4	1'-6"	11"	#4	1'-6"	12"	#4	1'-6"	12 1/2	#5	1'-6"
5'-1" TO 6'-0"	9"	#4	1'-6"	11"	#5	1'-6"	12 1/2	#5	1'-6"	13 1/2	#5	2'-0"	14 1/2	#5	2'-0"
6'-1" TO 7'-0"	10"	#5	1'-6"	12 1/2	#5	2'-0"	14 1/2	#5	2'-0"	15 1/2	#5	2'-0"	16 1/2	#5	2'-0"
7'-1" TO 8'-0"	11"	#5	1'-6"	14"	#5	2'-0"	16"	#5	2'-0"	17 1/2	#6	2'-6"	19"	#6	2'-6"
8'-1" TO 9'-0"	12 1/2	#5	2'-0"	15 1/2	#6	2'-6"	17 1/2	#6	2'-6"	19 1/2	#6	2'-6"	21"	#6	2'-6"
9'-1" TO 10'-0"	13 1/2	#6	2'-0"	17"	#6	2'-6"	19 1/2	#6	3'-0"	21 1/2	#6	3'-0"	23"	#6	3'-0"
10'-1" TO 11'-0"	14 1/2	#6	2'-6"	18 1/2	#6	3'-0"	21"	#6	3'-0"	23 1/2	#6	3'-0"	25"	#7	3'-0"
11'-1" TO 12'-0"	15 1/2	#6	2'-6"	20"	#6	3'-0"	23"	#7	3'-6"	25 1/2	#7	3'-6"	27"	#7	3'-6"
12'-1" TO 13'-0"	17"	#6	3'-0"	21 1/2	#7	3'-6"	24 1/2	#7	3'-6"	27 1/2	#7	4'-0"	29"	#7	4'-0"
13'-1" TO 14'-0"	18"	#7	3'-0"	23"	#7	3'-6"	26 1/2	#7	4'-0"	29 1/2	#7	4'-0"	31 1/2	#7	4'-0"
14'-1" TO 15'-0"	19"	#7	3'-0"	25"	#7	4'-0"	28"	#7	4'-0"	31 1/2	#7	4'-6"			
15'-1" TO 16'-0"	20 1/2	#7	3'-6"	26 1/2	#7	4'-0"	30"	#8	4'-6"						
16'-1" TO 17'-0"	21 1/2	#7	3'-6"	28"	#8	4'-6"									
17'-1" TO 18'-0"	22 1/2	#8	4'-0"	29 1/2	#8	4'-6"									

CASE 2

REINFORCED CONCRETE BEAM

FOR 4" TO 24" I.D. PIPE - NO SCALE

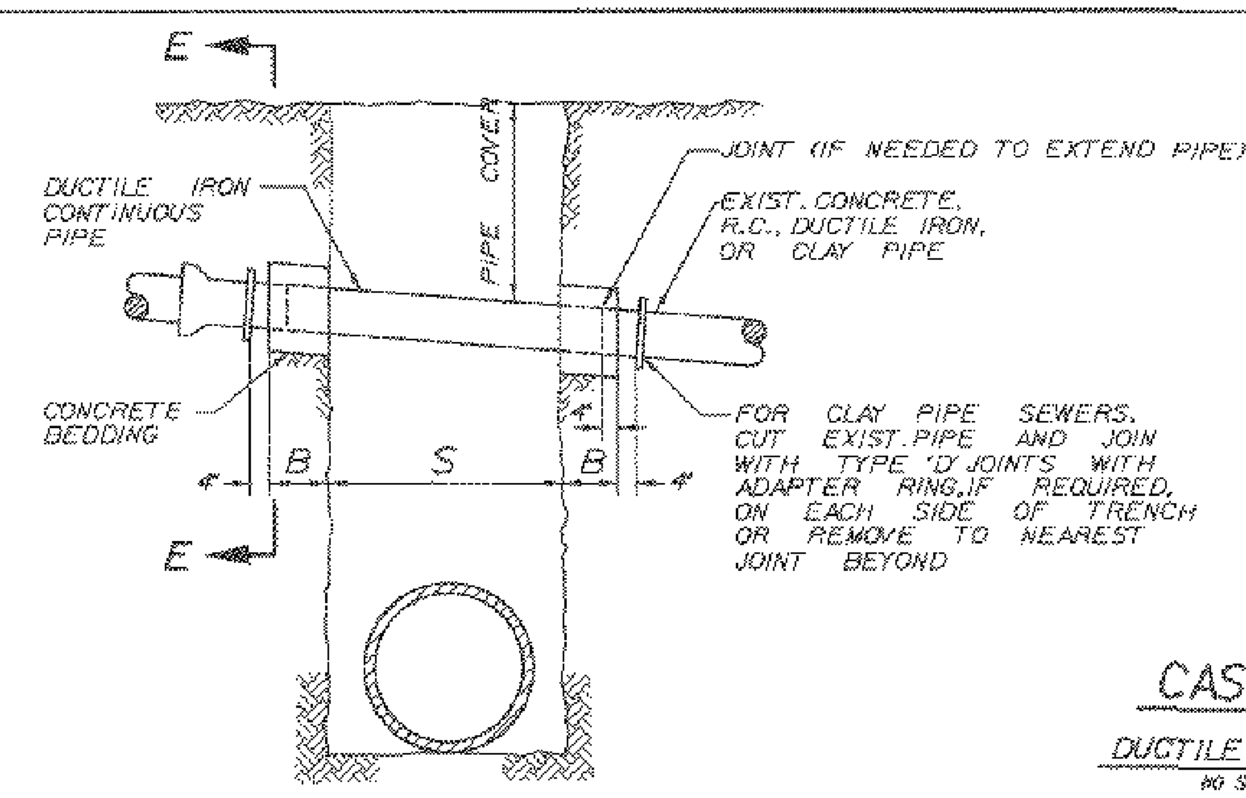

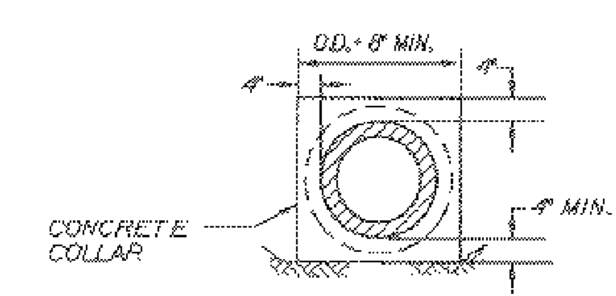

SECTION E - E

ALLOWABLE SPANS AND MIN. REQUIRED BEARING FOR DUCTILE IRON PIPE

DEPTH OF COVER	6" PIPE		8" PIPE		10" PIPE	
	S (MAX.)	B (MIN.)	S (MAX.)	B (MIN.)	S (MAX.)	B (MIN.)
0' TO 8'-0"	11'-0"	1'-6"	13'-6"	1'-6"	16'-6"	2'-0"
8'-1" TO 16'-0"	8'-0"	1'-6"	10'-0"	2'-0"	12'-0"	2'-6"
16'-1" TO 25'-0"	7'-0"	1'-6"	9'-0"	2'-0"	10'-6"	2'-6"

CASE 3

DUCTILE IRON PIPE

NO SCALE

PIPE SUPPORTS - GENERAL NOTES

1. ALL CROSSING HOUSE LATERALS 10" AND SMALLER SHALL BE SUPPORTED BY USE OF CASE 3 PIPE SUPPORT DETAIL.
2. ALL NON-METALLIC CROSSING PIPELINE AND CONDUITS WITH 18" OR LESS CLEARANCE, EXCEPT THOSE COVERED BY NOTE 1 ABOVE, SHALL BE SUPPORTED BY CASE 1 PIPE SUPPORT DETAIL.
3. ALL NON-METALLIC CROSSING PIPELINE AND CONDUITS NOT COVERED BY THE ABOVE NOTES 1 OR 2 SHALL BE SUPPORTED BY THE USE OF CASE 2 PIPE SUPPORT DETAIL.
4. BACKFILL SHALL BE BROUGHT UP UNIFORMLY ALONG BOTH SIDES OF PROTECTED PIPE AND SUPPORT SO AS TO INDUCE NO UNBALANCED FORCE.
5. CROSSING METALLIC CONDUITS 3 INCHES (NOMINAL SIZE) AND LARGER SHALL BE BACKFILLED TO 2'-0" BELOW THE CROSSING CONDUIT WITH MATERIALS AS DESCRIBED IN THE DISTRICT'S STANDARD SPECIFICATIONS FOR PIPE BEDDING AND TRENCH BACKFILL. THE TRENCH SHALL THEN BE BACKFILLED TO 12 INCHES OVER THE CONDUIT WITH CLEAN, MOISTENED SAND (SAND EQUIVALENT OVER 30), BROUGHT UP IN LAYERS OF NOT OVER 6 INCHES AND MECHANICALLY COMPACTED TO A RELATIVE DENSITY OF AT LEAST 90% WITH SPECIAL ATTENTION BEING GIVEN TO THE PIPE BOTTOM AND HAUNCH AREAS OF THE BACKFILL.
6. IF BEDDING IS REMOVED FROM THE EXISTING PIPE THAT WILL REMAIN IN PLACE, THE PIPE SHALL BE EMBEDDED WITH CONCRETE AT NO EXTRA COST TO THE AGENCY.
7. UNLESS OTHERWISE INDICATED, CONCRETE SHALL BE CLASS 420-C-2000.

PIPE SUPPORT DETAILS

AKM CONSULTING ENGINEERS
101 PACIFICA, SUITE 150
IRVINE, CA 92618
(949) 753-7333

Designed C.Y./D.M. 8/98
Drawn AB/SWP/BS/JM 8/98
Checked J.E.M. 8/98
Date

REV. NO.	DATE	BY	APRVD	DESCRIPTION
3	1998	T.W.	T.M.	LOAD FACTORS CHANGED ON CLASS B AND C BEDDING PER IEUA SPECIFICATIONS
2	1997	T.W.	A.D.	BEDDING MATERIAL CHANGED PER RWA - STD. DET. SHT. CONVERTED TO TWO SHEETS
1	1995	T.W.	N.C.	GRANULAR MATERIAL CHANGED TO CAREFULLY PLACED UNWASHED SAND - JETTED

REVIEWED BY:
M. T. Morrison Date 8-20-98
Project Manager for CBMWD

SCALE
AS SHOWN
Bar Scale shown below is one inch on original drawing. If NOT one inch on this sheet, adjust scales accordingly.
0" ——— 1"

CHINO BASIN
MUNICIPAL WATER DISTRICT
LOCATION
9400 Cherry Avenue, Building A
Fontana, California 92335
Telephone (909) 357-0241
MAILING ADDRESS
Post Office Box 697
Rancho Cucamonga, California 91730

AKM CONSULTING ENGINEERS
KIMBALL INTERCEPTOR
CONTRACT EN97004
BEDDING, BACKFILL AND PIPE SUPPORT DETAILS

SHEET NO. 14 OF 20
JOB NO. 690231
DRAWING NO. D4606-14

DETAILS2.DGN 7/10/97

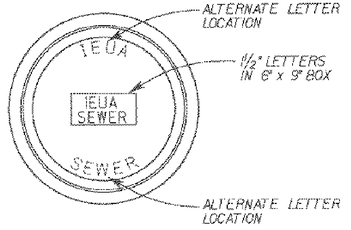

TOP VIEW
COVER DETAIL

NOTE:
MANHOLE FRAME & COVER SHALL BE ALHAMBRA FOUNDRY TYPE A-1252 OR LONG BEACH IRON WORKS TYPE X-106 B OR APPROVED EQUAL. FRAME & COVER SHALL BE BITUMINOUS COATED AND WEIGH A MINIMUM OF 430 LBS. THE COVER SHALL HAVE TWO PICK HOLES.

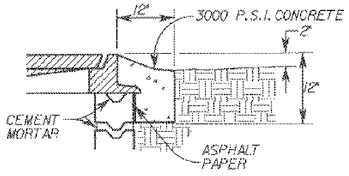

ROADWAY SHOULDER

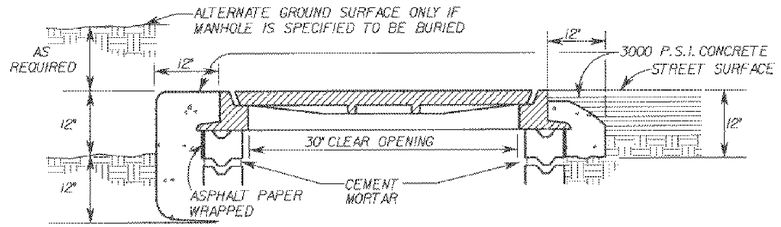

OPEN FIELD ROADWAY

ENTRANCE SHAFT DETAILS

NO SCALE

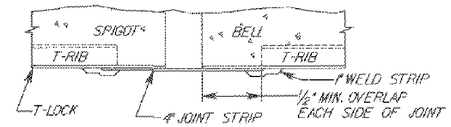

TYPE P-1 JOINT

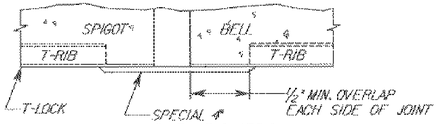

TYPE P-3 JOINT

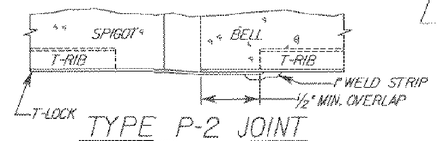

TYPE P-2 JOINT

FIELD JOINTS FOR T-LOCK LINED PIPE

NO SCALE

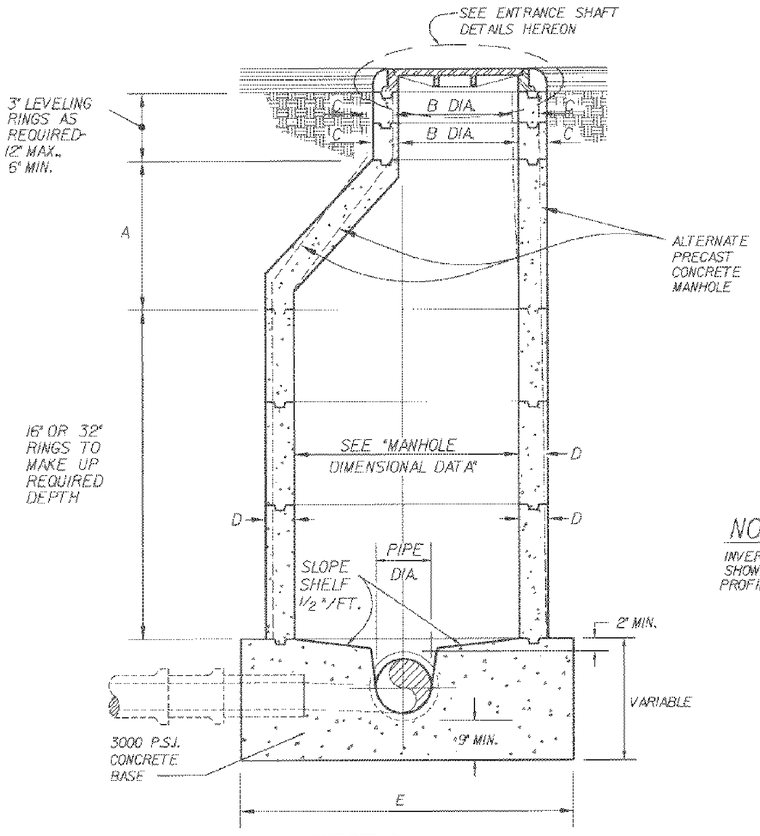

SECTION A-A

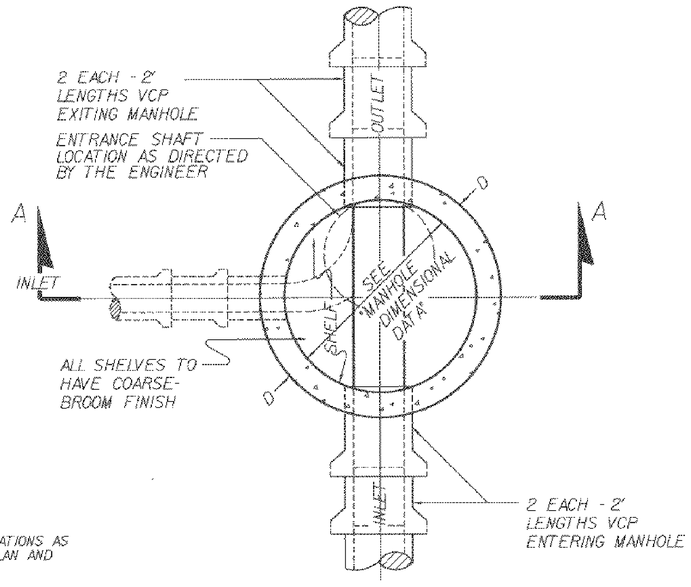

PLAN

NOTE
INVERT ELEVATIONS AS SHOWN ON PLAN AND PROFILE.

NOTES

1. PRECAST MANHOLE SHALL CONFORM TO THE REQUIREMENTS OF A.S.T.M.C478 AND BE DESIGNED FOR AASHTO H20 LOADING.
2. MATERIALS, EMBEDMENT, PLACEMENT, AND COMPACTION OF GRANULAR EMBEDMENT AND COMPACTED BACKFILL WILL CONFORM TO THE AGENCY'S STANDARD SPECIFICATIONS FOR PIPE BEDDING AND TRENCH BACKFILL.

IEUA STANDARD SEWER MANHOLE WITH ECCENTRIC CONE

NO SCALE

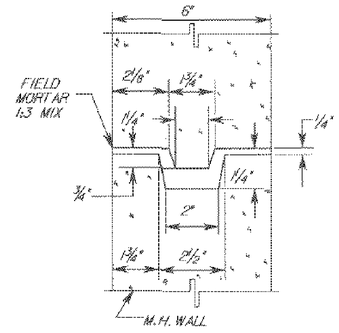

KEY WAY DETAIL FOR 5' OR LESS DIAMETER MANHOLES

NO SCALE

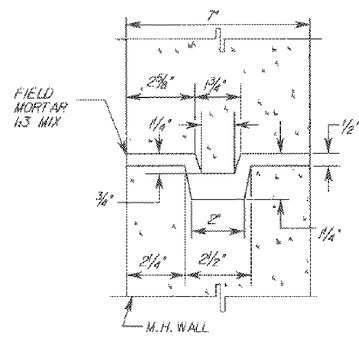

KEY WAY DETAIL FOR 6' OR GREATER DIAMETER MANHOLES

NO SCALE

MANHOLE DIMENSIONAL DATA

MANHOLE DIAMETER	TYPE	A	** B	C	D	E	PIPE DIAMETER
48"	REINFORCED	36"	30"	5"	4 1/8"	6'-0"	PIPE DIAMETERS TO 21"
48"	REINFORCED	36"	30"	6"	6"	6'-0"	* 24"
60"	REINFORCED	36"	30"	6"	6"	7'-0"	PIPE DIAMETERS 27" TO 39"
60"	REINFORCED	36"	30"	6"	6"	7'-0"	* 42"
72"	REINFORCED	36"	30"	6"	6"	8'-0"	PIPE DIAMETERS 45" & GREATER

* IF CONNECTIONS AND TEES ARE REQUIRED, USE NEXT HIGHER DIAMETER MANHOLE.

** WHERE 30" OPENING IS NOT POSSIBLE, USE CONCENTRIC COVER, ALHAMBRA FOUNDRY TYPE A-1325 OR EQUIVALENT.

DIMENSIONAL TABLE

AKM CONSULTING ENGINEERS
101 PACIFICA, SUITE 150
IRVINE, CA 92618
(949) 753-7333

REGISTERED PROFESSIONAL ENGINEER — CHRISTOPHER J. DIEHL — No. 53978 — CIVIL — STATE OF CALIFORNIA

Designed C.Y./D.M. 8/98
Drawn AB/SNP/BS/JM 8/98
Checked J.F.M. 8/98
Date

REV. NO.	DATE	BY	APRVD	DESCRIPTION
2	1997	T.W.	N.D.	BEDDING MATERIAL CHANGED PER RIA - ST.SHEET. SHT CONVERTED TO TWO SHEETS
1	1995	T.W.	N.C.	GRANULAR MATERIAL CHANGED TO CAREFULLY PLACED UNWASHED SAND - JETTED

REVIEWED BY:
M. T. Morgan
Project Manager for CBWD
Date 8-28-98

SCALE
AS SHOWN
Bar Scale shown below is one inch on original drawing. If NOT one inch on this sheet, adjust scales accordingly.
0" 1"

CHINO BASIN MUNICIPAL WATER DISTRICT
LOCATION: 9400 Cherry Avenue, Building A, Fontana, California 92335, Telephone (909) 357-0241
MAILING ADDRESS: Post Office Box 697, Rancho Cucamonga, California 91730

AKM CONSULTING ENGINEERS
KIMBALL INTERCEPTOR
CONTRACT EN97004

SEWER MANHOLE DETAILS

SHEET NO. 15 OF 20
JOB NO. 690231
DRAWING NO. D4606-15

DETAIL54.DGN 7/10/97

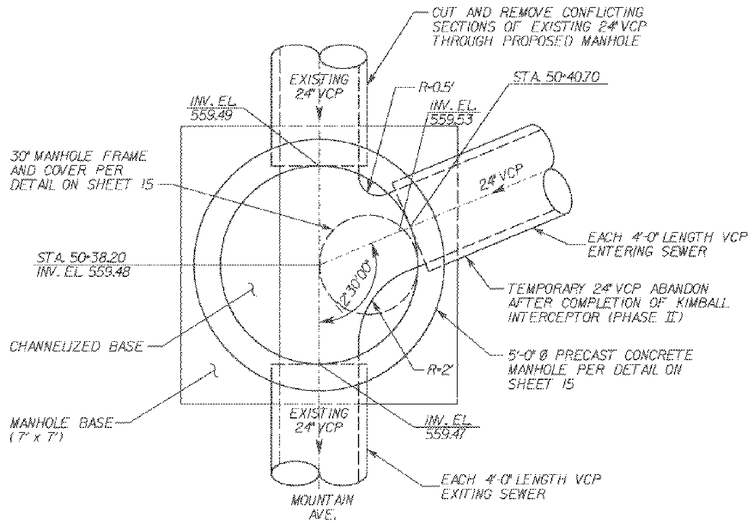

SEWER CONNECTION DETAIL (1/3)

SCALE: ½" = 1'-0"

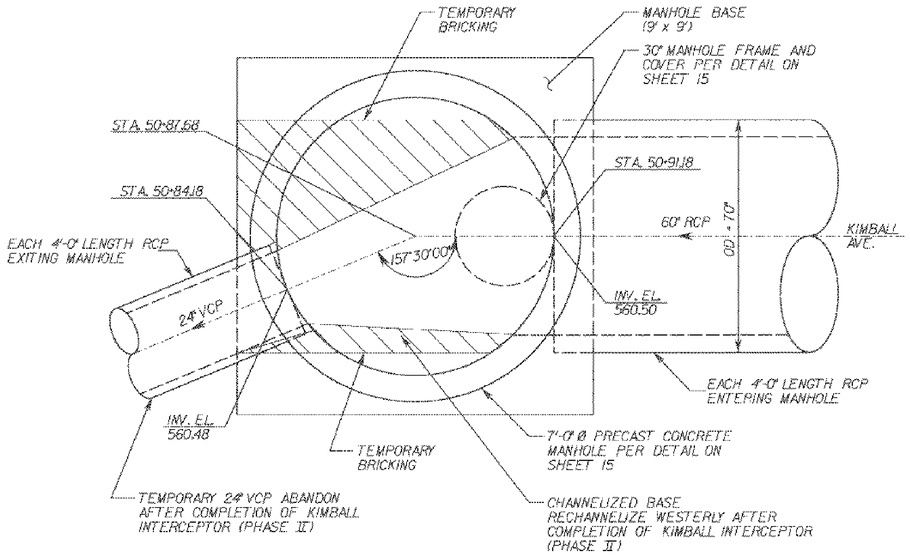

SEWER CONNECTION DETAIL (2/3)

SCALE: ½" = 1'-0"

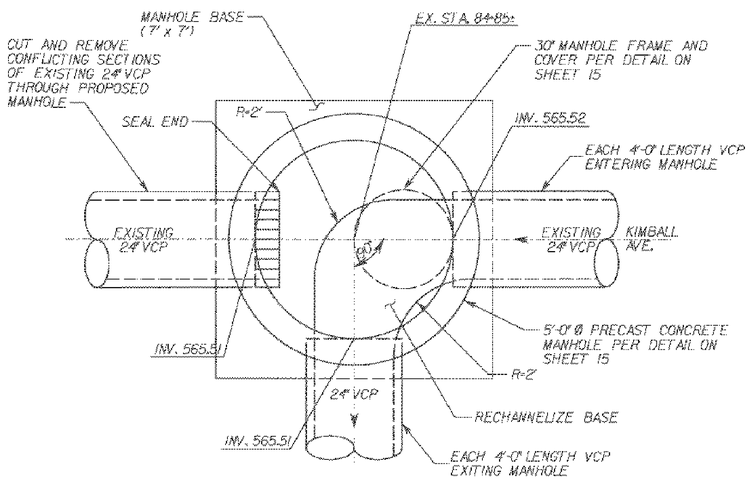

SEWER CONNECTION DETAIL (3/4)

SCALE: ½" = 1'-0"

N

AKM CONSULTING ENGINEERS
101 PACIFICA, SUITE 150
IRVINE, CA 92618
(949) 753-7333

REGISTERED PROFESSIONAL ENGINEER — JAMES E. BARBEE — No. 43959 — Exp. 3/31/99 — CIVIL — STATE OF CALIFORNIA

Designed C.Y./D.M. 8/98
Drawn AB/SWP/BS/JM 8/98
Checked J.E.M. 8/98
Date

REV. NO.	DATE	BY	APRVD	DESCRIPTION

REVIEWED BY:
M. T. Morizawa Date 3-20-98
Project Manager for CBMWD

SCALE
AS SHOWN
Bar Scale shown below is one inch on original drawing. If NOT one inch on this sheet, adjust scales accordingly.
0" 1"

CHINO BASIN MUNICIPAL WATER DISTRICT
LOCATION: 9400 Cherry Avenue, Building A, Fontana, California 92335, Telephone (909) 357-0241
MAILING ADDRESS: Post Office Box 697, Rancho Cucamonga, California 91729

AKM CONSULTING ENGINEERS
KIMBALL INTERCEPTOR
CONTRACT EN97004

SEWER CONNECTION DETAILS I

SHEET NO. 16 OF 20
JOB NO. 690231
DRAWING NO. D4606-16

DETAILS5.DGN 3/03/98

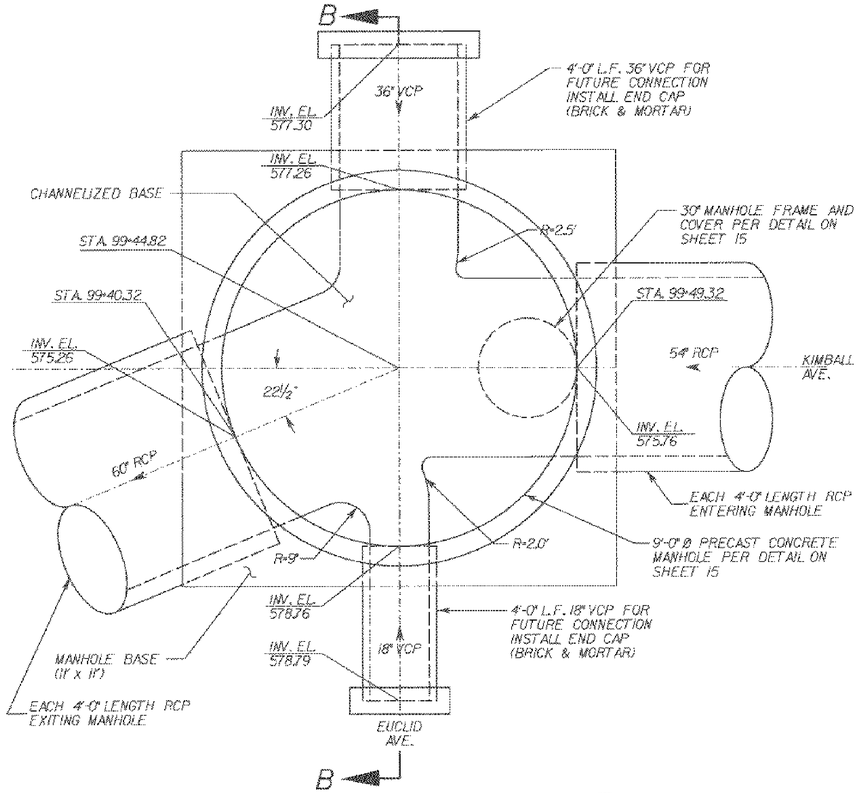

SEWER CONNECTION DETAIL 1/5

SCALE: ½" = 1'-0"

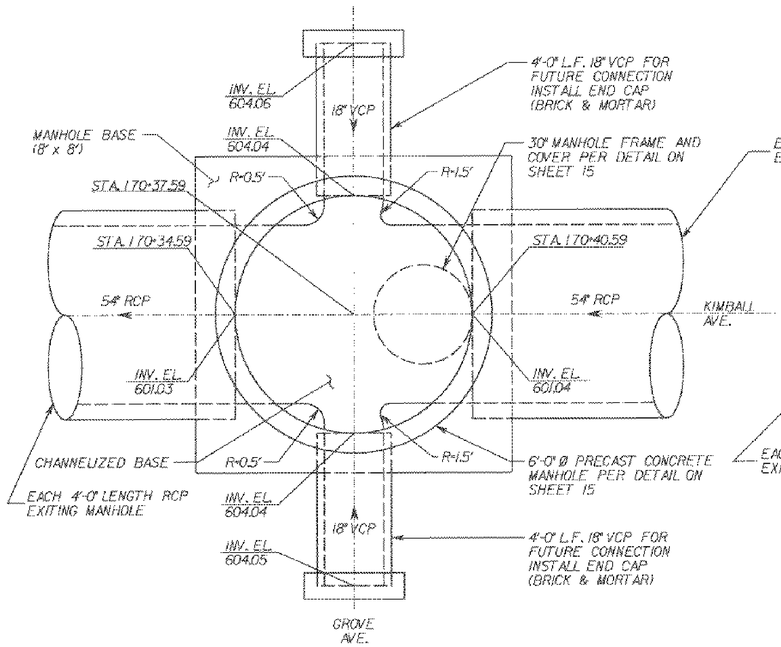

SEWER CONNECTION DETAIL 2/10

SCALE: ½" = 1'-0"

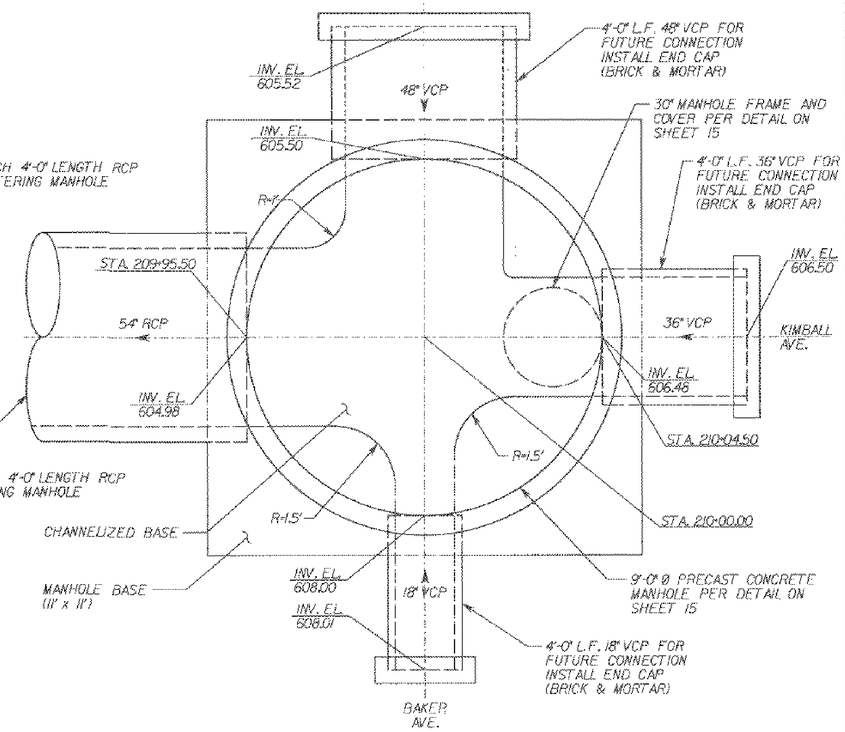

SEWER CONNECTION DETAIL 3/13

SCALE: ½" = 1'-0"

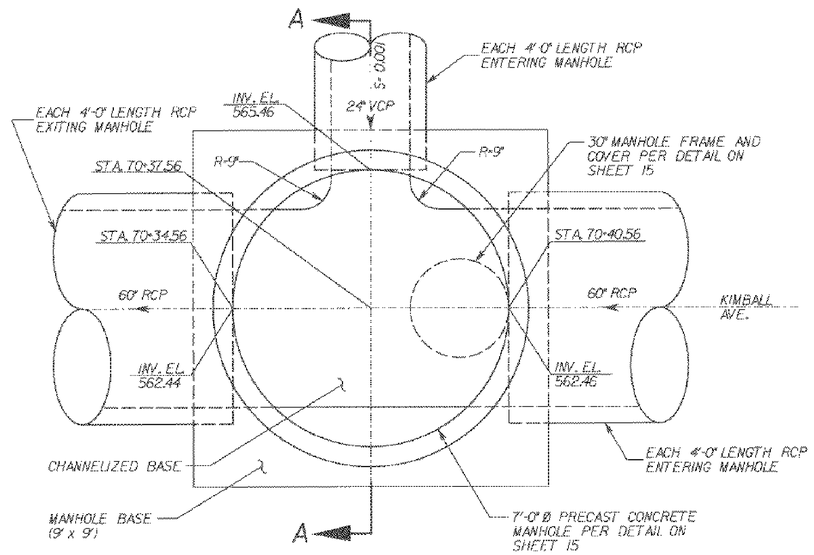

SEWER CONNECTION DETAIL 4/4

SCALE: ½" = 1'-0"

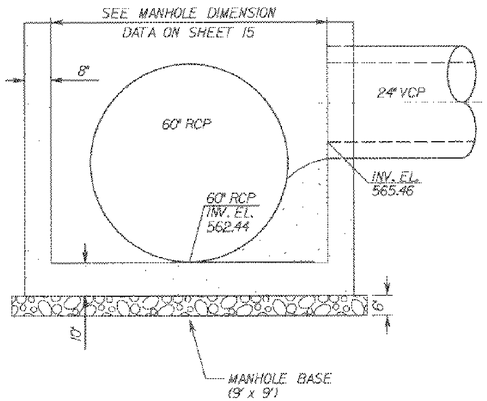

SECTION A-A

SCALE: ½" = 1'-0"

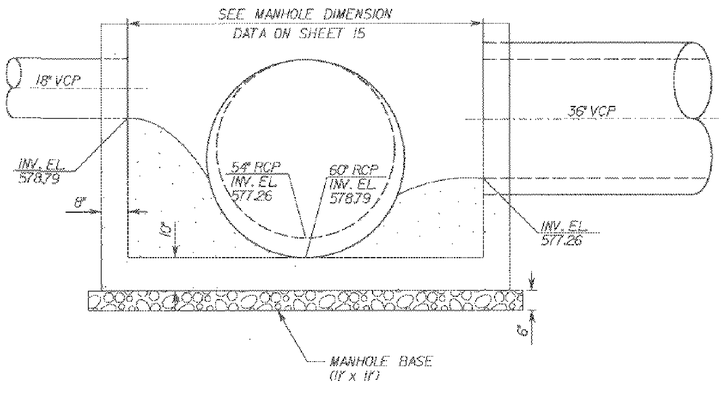

SECTION B-B

SCALE: ½" = 1'-0"

AKM CONSULTING ENGINEERS
101 PACIFICA, SUITE 150
IRVINE, CA 92618
(949) 753-7333

Designed C.Y./D.M. 8/98
Drawn AB/SWP/BS/JM 8/98
Checked J.E.M. 8/98
Date

REV. NO.	DATE	BY	APRVD	DESCRIPTION

REVIEWED BY:
Project Manager for CBMWD
Date 8-20-98

SCALE
AS SHOWN
Bar Scale shown below is one inch on original drawing. If NOT one inch on this sheet, adjust scales accordingly.
0" 1"

CHINO BASIN MUNICIPAL WATER DISTRICT
LOCATION: 9400 Cherry Avenue, Building A, Fontana, California 92335, Telephone (909) 357-0241
MAILING ADDRESS: Post Office Box 697, Rancho Cucamonga, California 91730

AKM CONSULTING ENGINEERS
KIMBALL INTERCEPTOR
CONTRACT EN97004

SEWER CONNECTION DETAILS 2

SHEET NO. 17 OF 20
JOB NO. 690231
DRAWING NO. 04006-17

NOTES

1. Use flashing arrow sign in speed zones of 35 MPH or more. Use high level warning device in speed zones of less than 35 MPH. All advance warning signs shall be supplemented with flashing beacons during night lane closures. A single flashing arrow sign (for each direction of travel) may be used in place of flashing beacons.
2. All warning signs for night lane closure shall be illuminated or reflectorized.
3. A C13 "END CONSTRUCTION" or C14 "END ROAD WORK" sign, as appropriate, shall be placed at the end of the work zone.
4. All cones shall be 28" or higher. Cones used for night work shall be fitted with 13" reflective sleeves.
5. All portable delineators shall be 36" high. Delineators used for night work shall be reflectorized with a minimum of two 3" bands placed a minimum of 2" from the top with a maximum of 6" between the bands.
6. Flashing arrow sign shall be Type 1 per Sec. 5-06.9 of the current Caltrans Traffic Manual. Operate FAS in sequential arrow mode.
7. For speeds of 35 MPH or less, the C36 may be omitted.
8. C18 for work of more than 24 hours in duration. C23 acceptable for day time only work of less than one day.
9. All signs and traffic control devices shall conform to the Work Area Traffic Control Handbook (WATCH) dated 1990.

ALL STREET EAST OF GROVE AVENUE IS UNDER THE JURISDICTION OF SAN BERNARDINO COUNTY

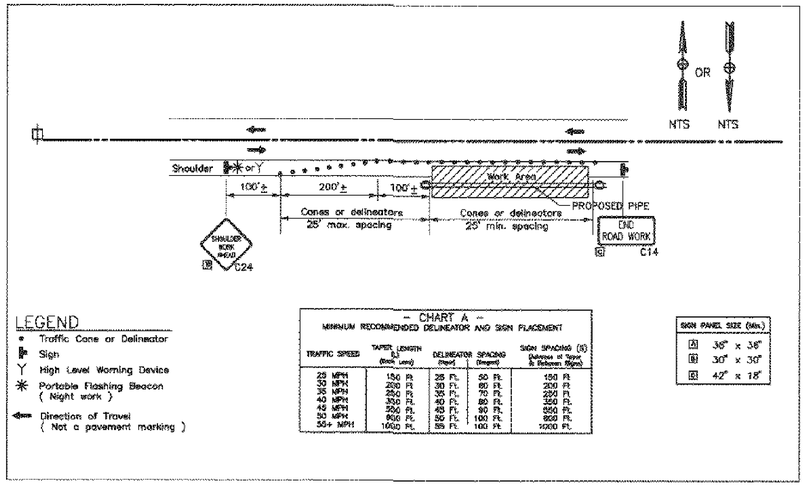

– CHART A –
MINIMUM RECOMMENDED DELINEATOR AND SIGN PLACEMENT

TRAFFIC SPEED	TAPER LENGTH L (Each Lane)	DELINEATOR SPACING (Taper)	DELINEATOR SPACING (Tangent)	SIGN SPACING (S) (Between all Signs & Between Sign & Taper)
25 MPH	150 Ft	25 Ft.	50 Ft.	150 Ft
30 MPH	200 Ft	30 Ft.	60 Ft.	200 Ft
35 MPH	250 Ft	35 Ft.	70 Ft.	250 Ft
40 MPH	350 Ft.	40 Ft.	80 Ft.	350 Ft.
45 MPH	550 Ft.	45 Ft.	90 Ft.	550 Ft.
50 MPH	600 Ft.	50 Ft.	100 Ft.	600 Ft.
55+ MPH	1000 Ft.	55 Ft.	100 Ft.	1000 Ft.

SIGN PANEL SIZE (Min.)	
A	36" x 36"
B	30" x 30"
C	42" x 18"

APPLICABLE SEGMENTS

FROM STA.	TO STA.	CL OF PIPE FROM EDGE OF PAVEMENT (EP)	JURISDICTION
50+87.60	66+97.51	13' S/O SOUTHERLY EP	100% SB COUNTY
66+97.51	98+21.06	20' S/O SOUTHERLY EP	100% SB COUNTY
107+54.74	134+19.27	19' N/O NORTHERLY EP	100% CITY OF CHINO
144+12.14	157+75.00	7' S/O SOUTHERLY EP	100% CITY OF CHINO
157+75.00	161+72.14	7' S/O SOUTHERLY EP	100% CITY OF CHINO
166+12.14	170+52.59	7' S/O SOUTHERLY EP	100% CITY OF CHINO
174+92.59	210+00.00	12'-25' S/O SOUTHERLY EP	100% SB COUNTY

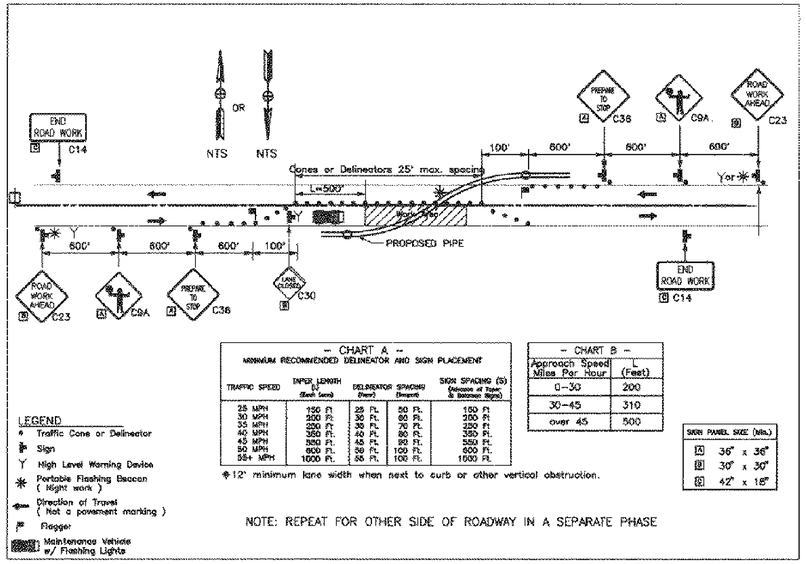

– CHART A –
MINIMUM RECOMMENDED DELINEATOR AND SIGN PLACEMENT

TRAFFIC SPEED	TAPER LENGTH L (Each Lane)	DELINEATOR SPACING (Taper)	DELINEATOR SPACING (Tangent)	SIGN SPACING (S) (Between all Signs & Between Sign & Taper)
25 MPH	150 Ft	25 Ft.	50 Ft.	150 Ft
30 MPH	200 Ft	30 Ft.	60 Ft.	200 Ft
35 MPH	250 Ft	35 Ft.	70 Ft.	250 Ft
40 MPH	350 Ft.	40 Ft.	80 Ft.	350 Ft.
45 MPH	550 Ft.	45 Ft.	90 Ft.	550 Ft.
50 MPH	600 Ft.	50 Ft.	100 Ft.	600 Ft.
55+ MPH	1000 Ft.	55 Ft.	100 Ft.	1000 Ft.

– CHART B –

Approach Speed Miles Per Hour	L (Feet)
0-30	200
30-45	310
over 45	500

SIGN PANEL SIZE (Min.)	
A	36" x 36"
B	30" x 30"
C	42" x 18"

*12' minimum lane width when next to curb or other vertical obstruction.

NOTE: REPEAT FOR OTHER SIDE OF ROADWAY IN A SEPARATE PHASE

APPLICABLE SEGMENTS

FROM STA.	TO STA.	CL OF PIPE FROM EDGE OF PAVEMENT (EP)	JURISDICTION
101+93.72	103+20.57	S/O S. EP TO N/O N. EP	100% CITY OF CHINO
134+19.27	139+16.06	N/O N. EP TO S/O S. EP	100% CITY OF CHINO

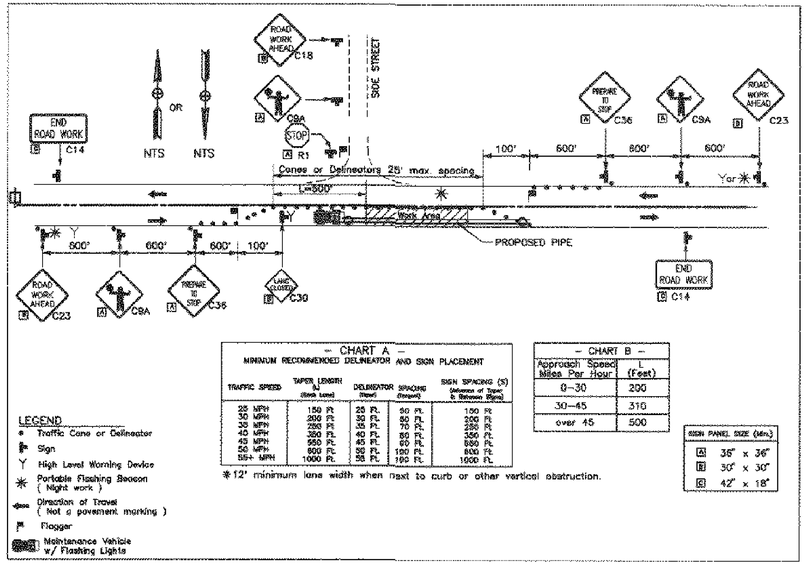

– CHART A –
MINIMUM RECOMMENDED DELINEATOR AND SIGN PLACEMENT

TRAFFIC SPEED	TAPER LENGTH L (Each Lane)	DELINEATOR SPACING (Taper)	DELINEATOR SPACING (Tangent)	SIGN SPACING (S) (Between all Signs & Between Sign & Taper)
25 MPH	150 Ft	25 Ft.	50 Ft.	150 Ft
30 MPH	200 Ft	30 Ft.	60 Ft.	200 Ft
35 MPH	250 Ft	35 Ft.	70 Ft.	250 Ft
40 MPH	350 Ft.	40 Ft.	80 Ft.	350 Ft.
45 MPH	550 Ft.	45 Ft.	90 Ft.	550 Ft.
50 MPH	600 Ft.	50 Ft.	100 Ft.	600 Ft.
55+ MPH	1000 Ft.	55 Ft.	100 Ft.	1000 Ft.

– CHART B –

Approach Speed Miles Per Hour	L (Feet)
0-30	200
30-45	310
over 45	500

SIGN PANEL SIZE (Min.)	
A	36" x 36"
B	30" x 30"
C	42" x 18"

*12' minimum lane width when next to curb or other vertical obstruction.

APPLICABLE SEGMENTS

FROM STA.	TO STA.	CL OF PIPE FROM EDGE OF PAVEMENT (EP)	JURISDICTION
98+21.06	99+55.53	AT SOUTHERLY EP	100% SB COUNTY
103+20.57	107+54.74	AT NORTHERLY EP	100% CITY OF CHINO
139+16.06	144+12.14	AT SOUTHERLY EP	100% CITY OF CHINO
161+72.14	166+12.14	AT SOUTHERLY EP	100% CITY OF CHINO

REGISTERED PROFESSIONAL ENGINEER ELIE FARAH EXP. 03-31-2000 NO. C42080 CIVIL STATE OF CALIFORNIA

PLANS PREPARED BY:

transtech
624 BREA CANYON ROAD
WALNUT, CA 91789
(909)595-8599
ELIE FARAH R.C.E. 42080 — DATE 8/18/98

Designed	YR	03/98
Drawn	YR	03/98
Checked	EF	03/98
		Date

REV. NO.	DATE	BY	APRVD	DESCRIPTION

REVIEWED BY: M. T. Montague Date 8-20-98
Project Manager for CBMWD

SCALE
AS SHOWN
Bar Scale shown below is one inch on original drawing. If NOT one inch on this sheet, adjust scales accordingly.
0" ——— 1"

CHINO BASIN MUNICIPAL WATER DISTRICT
LOCATION
9400 Cherry Avenue, Building A
Fontana, California 92335
Telephone (909) 357-0241
MAILING ADDRESS
Post Office Box 697
Rancho Cucamonga, California 91730

KIMBALL INTERCEPTOR
TRAFFIC CONTROL PLAN
TYPICAL TRAFFIC CONTROL

SHEET NO. 18 OF 20
JOB NO. 97080
DRAWING NO. D4606-18

– CHART A –
MINIMUM RECOMMENDED DELINEATOR AND SIGN PLACEMENT

TRAFFIC SPEED	TAPER LENGTH (L) (Each Lane)	DELINEATOR SPACING (Taper)	DELINEATOR SPACING (Tangent)	SIGN SPACING (S) (Between all Signs & Between Signs)
25 MPH	150 Ft.	25 Ft.	50 Ft.	150 Ft.
30 MPH	2[illegible] Ft.	30 Ft.	60 Ft.	200 Ft.
35 MPH	250 Ft.	35 Ft.	70 Ft.	250 Ft.
40 MPH	300 Ft.	40 Ft.	80 Ft.	350 Ft.
45 MPH	550 Ft.	45 Ft.	90 Ft.	450 Ft.
50 MPH	600 Ft.	50 Ft.	100 Ft.	500 Ft.
55+ MPH	1000 Ft.	55 Ft.	100 Ft.	1000 Ft.

NOTE: 12' minimum lane width when next to curb or other vertical obstruction.

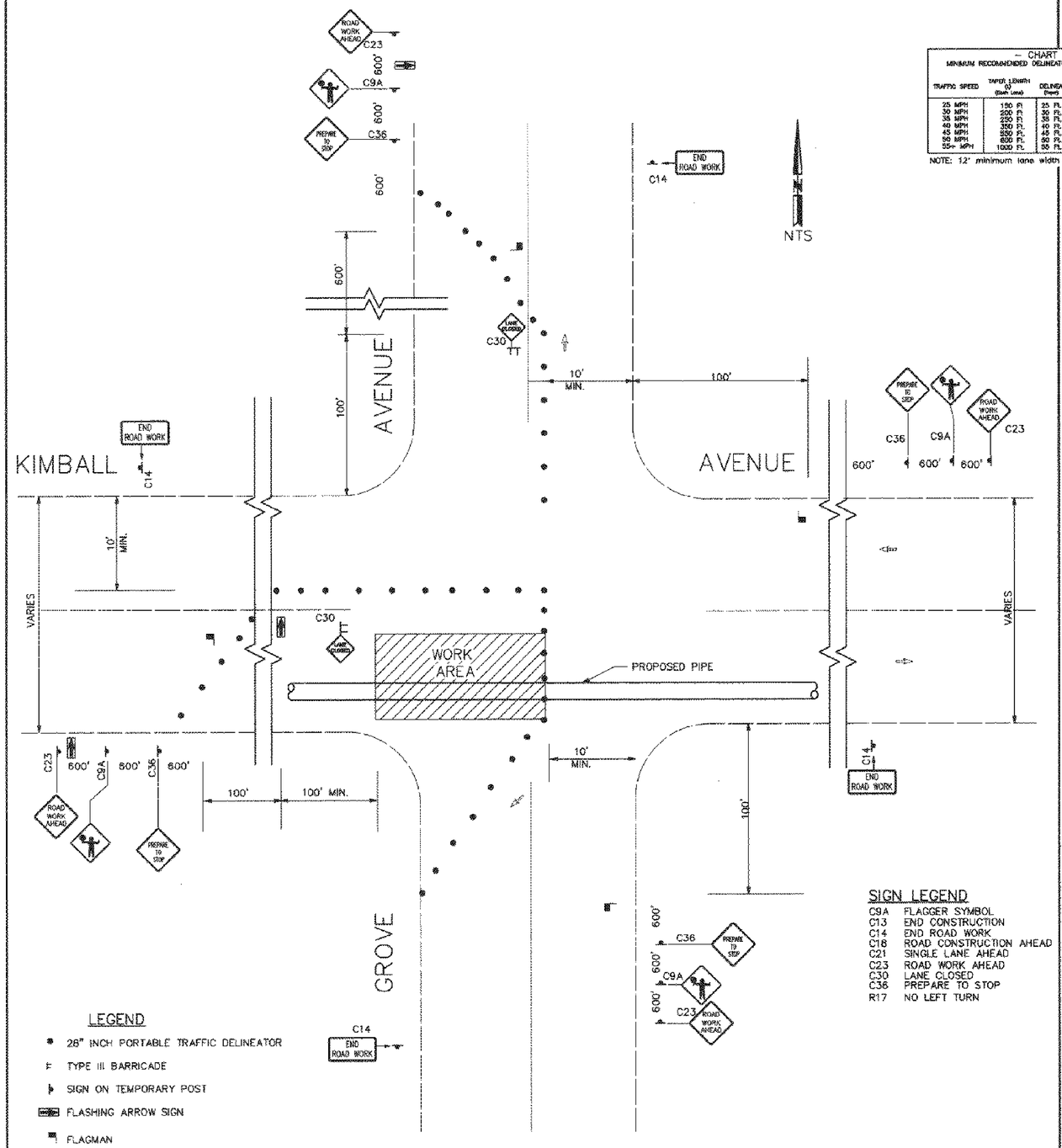

SIGN LEGEND
C9A FLAGGER SYMBOL
C13 END CONSTRUCTION
C14 END ROAD WORK
C18 ROAD CONSTRUCTION AHEAD
C21 SINGLE LANE AHEAD
C23 ROAD WORK AHEAD
C30 LANE CLOSED
C36 PREPARE TO STOP
R17 NO LEFT TURN

LEGEND
- 28" INCH PORTABLE TRAFFIC DELINEATOR
- TYPE III BARRICADE
- SIGN ON TEMPORARY POST
- FLASHING ARROW SIGN
- FLAGMAN

INTERSECTION OF KIMBALL AVENUE AND GROVE AVENUE

PHASE I

100% SAN BERNARDINO COUNTY

STA. 170+52.59 TO 174+92.59

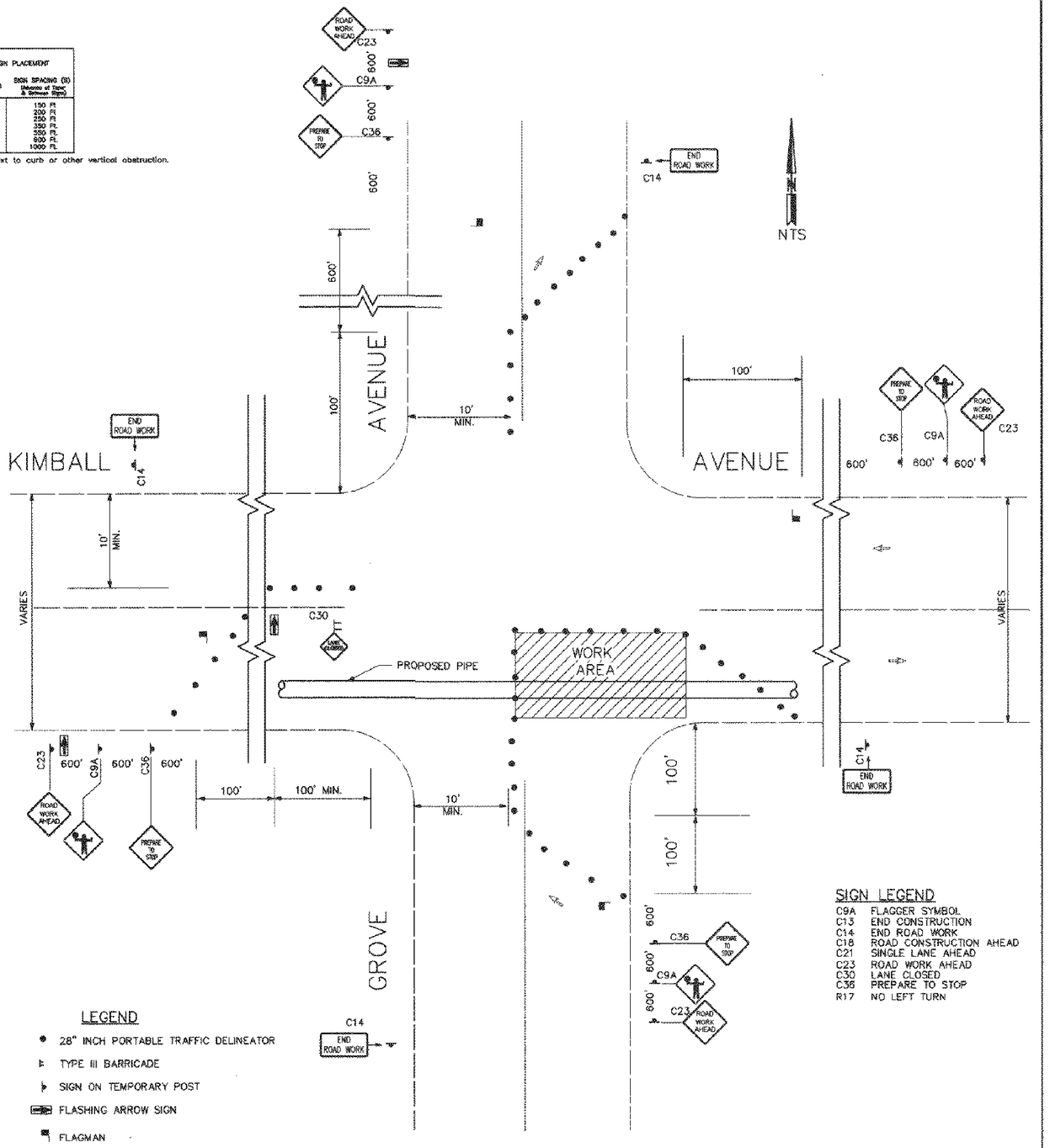

SIGN LEGEND
C9A FLAGGER SYMBOL
C13 END CONSTRUCTION
C14 END ROAD WORK
C18 ROAD CONSTRUCTION AHEAD
C21 SINGLE LANE AHEAD
C23 ROAD WORK AHEAD
C30 LANE CLOSED
C36 PREPARE TO STOP
R17 NO LEFT TURN

LEGEND
- 28" INCH PORTABLE TRAFFIC DELINEATOR
- TYPE III BARRICADE
- SIGN ON TEMPORARY POST
- FLASHING ARROW SIGN
- FLAGMAN

INTERSECTION OF KIMBALL AVENUE AND GROVE AVENUE

PHASE II

100% SAN BERNARDINO COUNTY

STA. 170+52.59 TO 174+92.59

REGISTERED PROFESSIONAL ENGINEER ELIE FARAH EXP. 03-31-2000 NO. C42080 CIVIL STATE OF CALIFORNIA

PLANS PREPARED BY:

transtech
624 BREA CANYON ROAD
WALNUT, CA 91789
(909)595-8599

ELIE FARAH R.C.E. 42080 DATE 8/19/98

Designed	YR	03/98
Drawn	YR	03/98
Checked	EF	03/98
		Date

REV. NO.	DATE	BY	APRVD	DESCRIPTION

REVIEWED BY:
M. T. Morrison
Project Manager for CBMWD
Date 8-20-98

SCALE
AS SHOWN
Bar Scale shown below is one inch on original drawing. If NOT one inch on this sheet, adjust scales accordingly.
0" 1"

CHINO BASIN MUNICIPAL WATER DISTRICT
LOCATION: 9400 Cherry Avenue, Building A, Fontana, California 92335, Telephone (909) 357-0241
MAILING ADDRESS: Post Office Box 697, Rancho Cucamonga, California 91730

KIMBALL INTERCEPTOR
TRAFFIC CONTROL PLAN
KIMBALL AVE AT GROVE AVE

SHEET NO. 19 OF 20
JOB NO. 97080
DRAWING NO. D4606-19

-- CHART A --
MINIMUM RECOMMENDED DELINEATOR AND SIGN PLACEMENT

TRAFFIC SPEED	TAPER LENGTH "L" (Each Lane)	DELINEATOR SPACING (Taper)	DELINEATOR SPACING (Tangent)	SIGN SPACING (S) (Between all Signs & Between Signs)
25 MPH	150 Ft.	25 Ft.	50 Ft.	150 Ft.
30 MPH	200 Ft.	30 Ft.	60 Ft.	200 Ft.
35 MPH	250 Ft.	35 Ft.	70 Ft.	250 Ft.
40 MPH	350 Ft.	40 Ft.	80 Ft.	350 Ft.
45 MPH	350 Ft.	45 Ft.	90 Ft.	350 Ft.
50 MPH	600 Ft.	50 Ft.	100 Ft.	500 Ft.
55+ MPH	1000 Ft.	55 Ft.	100 Ft.	1000 Ft.

NOTE: 12' minimum lane width when next to curb or other vertical obstruction.

PROTECT ALL SIGNAL EQUIPMENT AND MAINTAIN NORMAL SIGNAL OPERATION

INTERSECTION OF KIMBALL AVENUE AND EUCLID AVENUE

PHASE I

STA 99+44.82 TO 100+50.00 SAN BERNARDINO COUNTY
STA 100+50.00 TO 101+92.35 CITY OF CHINO

STA. 99+44.82 TO 101+92.35

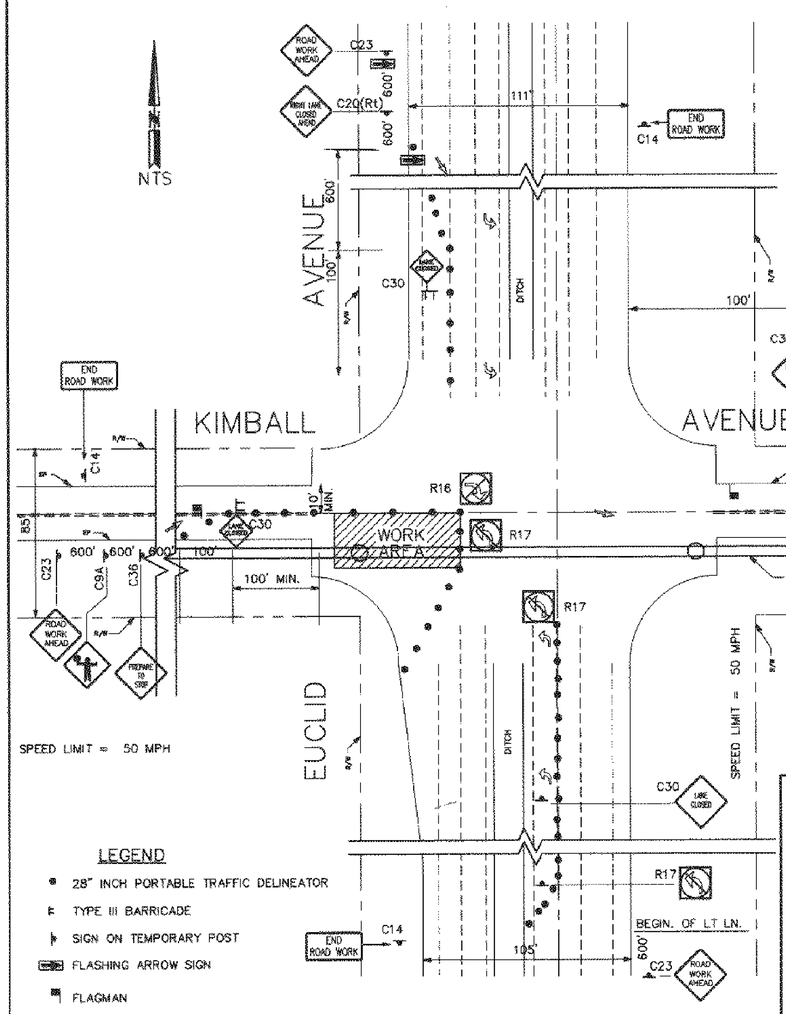

LEGEND
- 28" INCH PORTABLE TRAFFIC DELINEATOR
- TYPE III BARRICADE
- SIGN ON TEMPORARY POST
- FLASHING ARROW SIGN
- FLAGMAN

SIGN LEGEND
- C9A FLAGGER SYMBOL
- C13 END CONSTRUCTION
- C14 END ROAD WORK
- C18 ROAD CONSTRUCTION AHEAD
- C20(Lt/Rt) LEFT(RIGHT) LANE CLOSED AHEAD
- C21 SINGLE LANE AHEAD
- C23 ROAD WORK AHEAD
- C30 LANE CLOSED
- C36 PREPARE TO STOP
- R16 NO RIGHT TURN
- R17 NO LEFT TURN

INTERSECTION OF KIMBALL AVENUE AND EUCLID AVENUE

PHASE II

STA 99+44.82 TO 100+50.00 SB COUNTY
STA 100+50.00 TO 101+92.35 CITY OF CHINO

STA. 99+44.82 TO 101+92.35

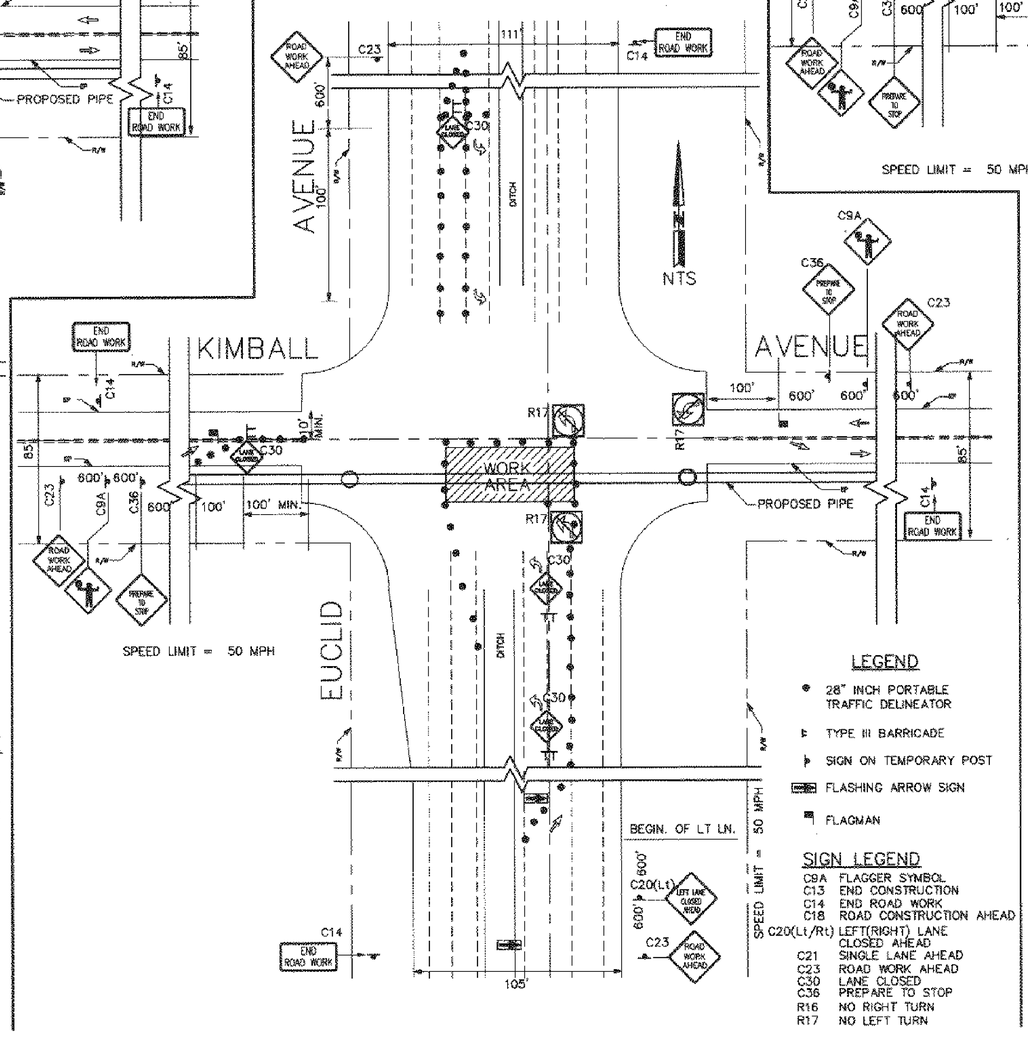

LEGEND
- 28" INCH PORTABLE TRAFFIC DELINEATOR
- TYPE III BARRICADE
- SIGN ON TEMPORARY POST
- FLASHING ARROW SIGN
- FLAGMAN

SIGN LEGEND
- C9A FLAGGER SYMBOL
- C13 END CONSTRUCTION
- C14 END ROAD WORK
- C18 ROAD CONSTRUCTION AHEAD
- C20(Lt/Rt) LEFT(RIGHT) LANE CLOSED AHEAD
- C21 SINGLE LANE AHEAD
- C23 ROAD WORK AHEAD
- C30 LANE CLOSED
- C36 PREPARE TO STOP
- R16 NO RIGHT TURN
- R17 NO LEFT TURN

INTERSECTION OF KIMBALL AVENUE AND EUCLID AVENUE

PHASE III

STA 99+44.82 TO 100+50.00 SAN BERNARDINO COUNTY
STA 100+50.00 TO 101+92.35 CITY OF CHINO

STA. 99+44.82 TO 101+92.35

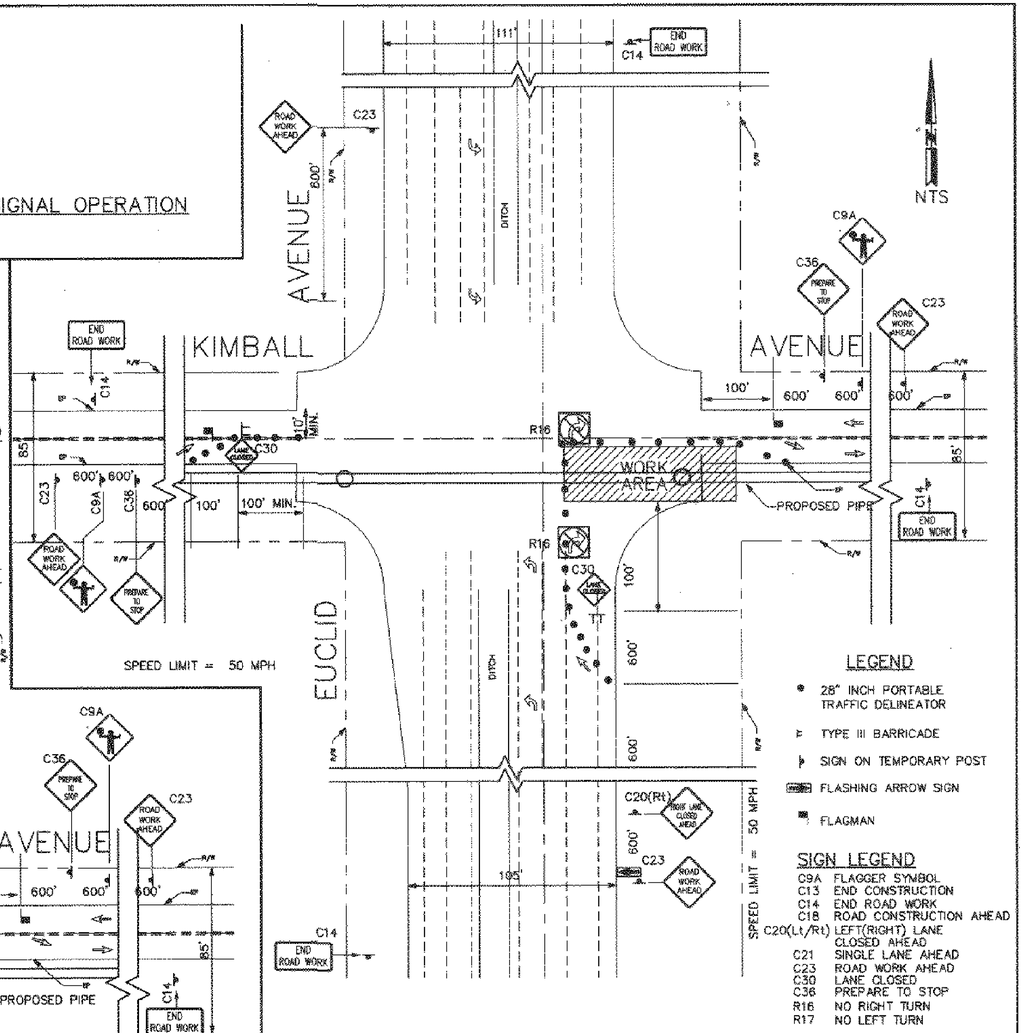

LEGEND
- 28" INCH PORTABLE TRAFFIC DELINEATOR
- TYPE III BARRICADE
- SIGN ON TEMPORARY POST
- FLASHING ARROW SIGN
- FLAGMAN

SIGN LEGEND
- C9A FLAGGER SYMBOL
- C13 END CONSTRUCTION
- C14 END ROAD WORK
- C18 ROAD CONSTRUCTION AHEAD
- C20(Lt/Rt) LEFT(RIGHT) LANE CLOSED AHEAD
- C21 SINGLE LANE AHEAD
- C23 ROAD WORK AHEAD
- C30 LANE CLOSED
- C36 PREPARE TO STOP
- R16 NO RIGHT TURN
- R17 NO LEFT TURN

REGISTERED PROFESSIONAL ENGINEER ELIE FARAH EXP. 03-31-2000 NO. C42080 CIVIL STATE OF CALIFORNIA

PLANS PREPARED BY:
transtech
524 BREA CANYON ROAD
WALNUT, CA 91789
(909)595-8599

ELIE FARAH R.C.E. 42080 — 8/19/98 DATE

Designed	YR	03/98
Drawn	YR	03/98
Checked	EF	03/98
		Date

REV. NO.	DATE	BY	APRVD	DESCRIPTION

REVIEWED BY:
Project Manager for CBMWD — Date 8-20-98

SCALE
AS SHOWN
Bar Scale shown below is one inch on original drawing. If NOT one inch on this sheet, adjust scales accordingly.
0" ——— 1"

CHINO BASIN MUNICIPAL WATER DISTRICT
LOCATION: 9400 Cherry Avenue, Building A, Fontana, California 92335, Telephone (909) 357-0241
MAILING ADDRESS: Post Office Box 697, Rancho Cucamonga, California 91730

KIMBALL INTERCEPTOR
TRAFFIC CONTROL PLAN
KIMBALL AVE AT EUCLID AVE

SHEET NO. 20 OF 20
JOB NO. 97080
DRAWING NO. D4606-20